CALIFORNIA REGIONAL WATER QUALITY CONTROL BOARD
SAN FRANCISCO BAY REGION

ORDER NO. 95-187
NPDES PERMIT NO. CA0037753

REISSUING WASTE DISCHARGE REQUIREMENTS FOR:

SANITARY DISTRICT NO. 5 OF MARIN COUNTY
TIBURON TREATMENT PLANT, MARIN COUNTY

The California Regional Water Quality Control Board, San Francisco Bay Region, hereinafter called the Board, finds that:

1. Sanitary District No. 5 of Marin County, hereinafter called the discharger, submitted a Report of Waste Discharge dated December 21, 1994 for reissuance of waste discharge requirements and a permit to discharge wastewater to waters of the State and the United States under the National Pollutant Discharge Elimination System (NPDES).

2. This discharge is presently regulated by Waste Discharge Requirements in Order No. 90-080, adopted by the Board on June 20, 1990.

3. The discharger owns and operates a wastewater treatment plant, located at 2001 Paradise Drive, Tiburon, Marin County, California. The plant provides secondary level treatment for domestic wastewater from the Town of Tiburon, City of Belvedere and Unincorporated Areas. The discharger's service area has a present population of 7,600. The treatment plant has an average dry weather design flow of 0.98 million gallons per day (mgd), and can treat up to 2.3 mgd during wet weather period with flows in excess receiving primary sedimentation with a clarifier prior to disinfection. The plant presently discharges an average dry weather flow of 0.6 mgd, and an annual average effluent flow of 0.7 mgd.

4. The U.S. Environmental Protection Agency (USEPA) and the Board have classified this discharge as a major discharge.

5. Treatment facilities utilized prior to discharge to Raccoon Straits consist of primary sedimentation, biological treatment using activated sludge, followed by secondary sedimentation, chlorination and dechlorination.

6. During wet weather only, the secondary effluent is filtered with pressure filters prior to disinfection (for flows up to 2.3 mgd). Flows in excess of 2.3 mgd receive primary settling within a clarifier prior to disinfection. The two wet weather waste streams (the first from the secondary treatment processes and the second from the primary clarifiers) are recombined at the chlorine contact basin where all of the flow is chlorinated and dechlorinated. A treatment process schematic diagram is included as an attachment.

7. Treated wastewater is combined with effluent from the Sewerage Agency of Southern Marin treatment plant and is discharged 840 ft. offshore at a 84 foot depth, into Raccoon Straits (San Francisco Bay) through a submerged diffuser (Latitude 37 deg. 52 Min. 12 Sec.; Longitude 112 deg. 27 Min. 5 Sec.). The effluent receives an initial dilution of 1400:1. At a flow of 3.6 MGD the effluent will receive an initial dilution of 1200:1.

8. Primary and secondary sludge is thickened with a dissolved air flotation thickener, digested in anaerobic digesters and dewatered by belt filter press before delivered to Redwood Sanitary Landfill for disposal.

9. The Board adopted a revised Water Quality Control Plan for the San Francisco Bay Basin (Basin Plan) on December 17, 1986. The Basin Plan identifies beneficial uses and water quality objectives for surface and groundwaters in the region, as well as effluent limitations and discharge prohibitions intended to protect beneficial uses. This Order implements the plans, policies and provisions of the Board's Basin Plan.

10. The Basin Plan contains water quality objectives and beneficial uses for Central San Francisco Bay and contiguous waters. The beneficial uses of Central San Francisco Bay and contiguous water bodies include:

- Industrial Service and Process Supply
- Navigation
- Water Contact Recreation
- Non-contact Water Recreation
- Ocean Commercial and Sport Fishing
- Wildlife Habitat
- Preservation of Rare and Endangered Species
- Fish Migration and Spawning
- Shellfish Harvesting
- Estuarine Habitat

11. Effluent limitations in this permit are based on the Basin Plan, USEPA water quality criteria (Quality Criteria for Water, EPA 440/5-86-001, 1986; Gold Book), applicable Federal Regulations (40 CFR Parts 122 and 131), and Best Professional Judgement.

12. The effluent limit for copper in this permit is based on a water quality objective for copper of 4.9 µg/l and the Board's study to develop a site-specific water quality objective for copper for San Francisco Bay, based on Best Professional Judgement. This study and associated staff analysis are described in the September 25, 1992 Board staff report entitled "Revised Report on Proposed Amendment to Establish a Site Specific Objective for Copper for San Francisco Bay."

13. It is the Board's intention to work towards controlling copper loadings to the San Francisco Bay-Delta Estuary, such as through a regional copper wasteload allocation. This permit may be amended in the future to include specific copper mass loading limitations and loading reductions in accordance with an approved copper wasteload allocation.

14. The Basin Plan specifies marine and fresh water effluent limitations which are to be applied to a discharge for selected toxic pollutants. Whether marine or fresh water limitations are applied depends upon the unique salinity characteristics of the receiving waters. Central San Francisco Bay, the discharge receiving water, is an estuarine water with salinity that is generally marine in character. Therefore, effluent limitations for the discharge are based on marine water quality objectives.

15. Federal Regulations for storm water discharges were promulgated by the USEPA on November 19, 1990. The regulations [40 Code of Federal Regulations (CFR) Parts 122, 123, and 124] require specific categories of industrial activity (industrial storm water) to obtain a NPDES permit and to implement Best Available Technology Economically Available and Best Conventional Pollutant Control Technology to control pollutants in industrial storm water discharges.

16. The storm water flows from the wastewater treatment facility process areas are directed to the wastewater treatment plant headworks and treated along with the wastewater discharged to the treatment plant. These storm water flows constitute all industrial storm water discharges at this facility.

17. The Discharger's sewerage collection system contains nine (9) lift stations. The nine lift stations all have alternate power source. Six of them also have alarm for power or equipment failure.

18. An Operations and Maintenance Manual is maintained by the discharger for purposes of providing plant, collection system, and regulatory personnel with a source of information describing all equipment, recommended operation strategies, process control monitoring, and maintenance activities. In order to remain a useful and relevant document, the manual must be kept updated to reflect significant changes in treatment and collection facility equipment and operation practices.

19. This Order serves as an NPDES Permit, adoption of which is exempt from the provisions of Chapter 3 (commencing with Section 21000) of Division 13 of the Public Resources Code [California Environmental Quality Act (CEQA)] pursuant to Section 13389 of the California Water Code.

20. The discharger and interested agencies and persons have been notified of the Board's intent to reissue requirements for the existing discharge and have been provided an opportunity to submit their written views and recommendations.

21. The Board, in a public meeting, heard and considered all comments pertaining to the discharge.

IT IS HEREBY ORDERED, pursuant to the provisions of Division 7 of the California Water Code and regulations adopted thereunder, and to the provisions of the Clean Water Act and regulations and guidelines adopted thereunder, that the discharger shall comply with the following:

A. DISCHARGE PROHIBITIONS

1. Discharge of treated wastewater at a location or in a manner different from that described in findings of this Order is prohibited.

2. Discharge at any point at which the wastewater does not receive an initial dilution of at least 10:1 is prohibited.

3. The bypass or overflow of untreated or partially treated wastewater to waters of the State, either at the treatment plant or from the collection system or pump stations tributary to the treatment plant, is prohibited.

4. The average dry weather flow discharge shall not exceed 0.98 mgd. The average dry weather flow shall be determined over three consecutive dry weather months each year.

5. Discharges of water, materials, or wastes other than storm water to a storm drain system or waters of the State are prohibited.

6. Storm water discharges shall not cause pollution, contamination, or nuisance.

B. EFFLUENT LIMITATIONS

The term "effluent" in the following limitations means the wastewater effluent from the discharger's wastewater treatment facility, as discharged to Raccoon Straits.

1. The effluent shall not exceed the following limits:

Constituent	Units	Monthly Average	Weekly Average	Daily Maximum	Instantaneous Maximum
a. Biochemical Oxygen Demand (BOD_5, 20°C)	mg/l	30	45	60	--
b. Total Suspended Solids	mg/l	30	45	60	--
c. Oil & Grease	mg/l	10	--	20	--
d. Settleable Matter	ml/l-hr	0.1	--	--	0.2
e. Total Chlorine Residual (1)	mg/l	--	--	--	0.0

Footnote:
(1) Requirement defined as below the limit of detection in standard test methods.

2. pH: the pH of the discharge shall not exceed 9.0 nor be less than 6.0.

3. Total Coliform Bacteria:

   The treated wastewater, at some place in the treatment process prior to discharge, shall meet the following limits of bacteriological quality:

   a. The moving median value for the Most Probable Number (MPN) of total coliform bacteria in any five (5) consecutive samples shall not exceed 240 MPN/100 ml; and,

   b. Any single sample shall not exceed 10,000 MPN/100 ml.

4. 85 Percent Removal, BOD and TSS:

   The arithmetic mean of the biochemical oxygen demand (five day, 20°C) and total suspended solids values, by weight, for effluent samples collected in each calendar month shall not exceed 15 percent of the arithmetic mean of the respective values, by weight, for influent samples collected at approximately the same times during the same period.

5. TOXIC SUBSTANCES EFFLUENT LIMITATIONS:

The effluent shall not exceed the following limits (1) (2):

Table 1
(All limits in µg/l)

Constituent		Monthly Average (3)	Daily Average (3)
1. Arsenic	(5)		200
2. Cadmium	(5)		30
3. Chromium	(4) (5)		110
4. Copper			37
5. Lead	(5)		53
6. Mercury		0.21	1
7. Nickel	(5)		65
8. Cyanide	(6)		25
9. Selenium	(5)		50
10. Silver			23
11. Zinc	(5)		580
12. Phenols			500
13. PAHs	(7)	0.31	

Footnotes:

(1) These limits are based on marine water quality objectives. Compliance with these limits is intended to be achieved through secondary treatment and as necessary, pretreatment and source control.

(2) All analyses shall be performed using current USEPA methods, as specified in 40 CFR 136, or equivalent reference approved in writing by the Executive Officer. Method Detection Limits, Practical Quantitation Limits, and Limits of Quantitative Levels will be taken into account in determining compliance with effluent limitations.

(3) Limits apply to the average concentration of all samples collected during the averaging period (Daily - 24-hour period; Monthly - calendar month).

(4) The discharger may meet this limit as total chromium.

(5) Effluent limitation may be met as a four-day average. If compliance is to be determined based on a four-day average, then four separate 24-hour composite samples shall be obtained over four consecutive days, and the concentration results for each composite sample shall be reported, as well as the average of the four.

(6) The discharger may demonstrate compliance with this limitation by measurement of weak acid dissociable cyanide.

(7) PAHs (polynuclear aromatic hydrocarbons) shall mean all PAH constituents identified by USEPA Method 610. For compliance monitoring, other approved test methods may be used, provided all USEPA Method 610 PAH constituents are identified.

6. Effluent Acute Toxicity:

Representative samples of the effluent shall meet the following limits for acute toxicity: (Provision E.5 of this Order applies to these bioassays.)

The survival of organisms in undiluted effluent shall be an eleven (11) sample median value of not less than 90 percent survival, and an eleven (11) sample 90 percentile value of not less than 70 percent survival. The eleven sample median and 90th percentile effluent limitations are defined as follows:

11 sample median: A bioassay test showing survival of less than 90 percent represents a violation of this effluent limit, if five or more of the past ten or less bioassay tests show less than 90 percent survival.

90th percentile: A bioassay test showing survival of less than 70 percent represents a violation of this effluent limit, if one or more of the past ten or less bioassay tests show less than 70 percent survival.

C. RECEIVING WATER LIMITATIONS

1. The discharge of waste shall not cause the following conditions to exist in waters of the State at any place:

a. Floating, suspended, or deposited macroscopic particulate matter or foam; or

b. Bottom deposits or aquatic growths to the extent that such deposits or growths cause nuisance or adversely affect beneficial uses; or

c. Alteration of temperature, turbidity, or apparent color beyond present natural background levels; or

d. Visible, floating, suspended, or deposited oil or other products of petroleum origin; or

e. Toxic or other deleterious substances to be present in concentrations or quantities which will cause deleterious effects on wildlife, waterfowl, or other aquatic biota, or which render any of these unfit for human consumption, either at levels created in the receiving waters or as a result of biological concentration.

2. The discharge of waste shall not cause the following limits to be exceeded in waters of the State anyone place within one foot of the water surface:

a.	Dissolved Oxygen	5.0 mg/l, minimum
	The median dissolved oxygen concentration for any three consecutive months shall not be less than 80% of the dissolved oxygen content at saturation. When natural factors cause concentrations less than that specified above, then the discharge shall not cause further reduction in ambient dissolved oxygen concentrations.	
b.	Dissolved Sulfide	0.1 mg/l, maximum
c.	pH	Variation from normal ambient pH by more than 0.5 pH units.
d.	Un-ionized Ammonia	0.025 mg/l as N, annual median 0.16 mg/l as N, maximum
e.	Nutrients	Waters shall not contain biostimulatory substances in concentrations that promote aquatic growths to the extent that such growths cause nuisance or adversely affect beneficial uses.

3. The discharge shall not cause a violation of any particular water quality standard for receiving waters adopted by the Board or the State Board as required by the Clean Water Act and regulations adopted thereunder. If more stringent applicable water quality standards are promulgated or approved pursuant to Section 303 of the Clean Water Act, or amendments thereto, the Board will revise and modify this Order in accordance with such more stringent standards.

4. Storm water discharge

   a. Storm water discharges shall not adversely impact human health or the environment.

   b. Storm water discharges shall not cause or contribute to a violation of any applicable water quality objective for receiving waters contained in the Basin Plan.

D. SLUDGE MANAGEMENT PRACTICES

1. All sludge generated by the discharger must be disposed of in a municipal solid waste landfill, reused by land application, or disposed of in a sludge-only landfill in accordance with 40 CFR Part 503. All the requirements in 40 CFR 503 are enforceable by USEPA whether or not they are stated in an NPDES permit or other permit issued to the discharger.

2. Sludge treatment, storage, and disposal or reuse shall not create a nuisance, such as objectionable odors or flies, or result in groundwater contamination.

3. Duty to mitigate: The discharger shall take all reasonable steps to prevent or minimize any sludge use or disposal which has a likelihood of adversely affecting human health or the environment.

4. The discharge of sewage sludge shall not cause waste material to be in a position where it is, or can be carried from the sludge treatment and storage site and deposited in the waters of the State.

5. The sludge treatment and storage site shall have facilities adequate to divert surface runoff from adjacent areas, to protect boundaries of the site from erosion, and to prevent any conditions that would cause drainage from the materials in the temporary storage site. Adequate protection is defined as protection from at least a 100 year storm and protection from the highest possible tidal stage that may occur.

6. The Discharger is hereby notified that on February 19, 1993, the USEPA issued the final rule for the use and disposal of sewage sludge (40 [Code of Federal Regulations] (CFR) Part 503). This rule requires that producers of sewage sludge meet certain reporting, handling, and disposal requirements. The Discharger is advised to contact USEPA regarding compliance with 40 CFR Part 503.

7 Currently, all sludge generated by the discharger is disposed of in a municipal solid waste landfill. If the discharger desires to dispose of sludge by a different method, the discharger shall notify the Board and USEPA in writing before start-up of the alternative disposal practice.

8 Sludge that is disposed of in a municipal solid waste landfill must meet the requirements of 40 CFR 258. The discharger's annual self-monitoring report shall include the amount of sludge disposed of, and the landfill(s) to which it was sent.

9 Permanent on-site sludge storage or disposal activities are not authorized by this permit. A Report of Waste Discharge shall be filed and the site brought into compliance with all applicable regulations prior to commencement of any such activity by the discharger.

10 The Board may amend this permit prior to expiration if changes occur in applicable state and federal sludge regulations.

E. PROVISIONS

1. Requirements prescribed by this Order supersede the requirements prescribed by Order No. 90-080. Order No. 90-080 is hereby rescinded.

2. This permit may be reopened to amend the effluent limit for copper once the site-specific water quality objective for copper for San Francisco Bay is fully effective.

3. Where concentration limitations in mg/l or µg/l are contained in this Permit, the following Mass Emission Limitations shall also apply.

   Mass Emission Limit in kg/day = (Concentration Limit in mg/l) x (Actual Flow in million gallons per day averaged over the time interval to which the limit applies) x 3.78 (conversion factor).

4. The discharger shall comply with all sections of this Order immediately upon adoption.

5. Compliance with Acute Toxicity Effluent Limitation

   a. Compliance with Acute Toxicity Effluent Limitation of this Order shall be evaluated by measuring survivals of two test species exposed in parallel to undiluted effluent for 96 hours in flow-through bioassays. One test specie shall be the three-spine stickleback, and the other shall be fathead minnow. The Executive Officer may consider changing or reducing the number of

compliance fish species or Effluent Acute Toxicity Limitation based on data submitted by the discharger.

b. All bioassays shall be performed according to protocols approved by the USEPA or State Board, or published by the American Society for Testing and Materials (ASTM) or American Public Health Association.

6. Compliance With Toxic Substances Limitations

a. The discharger shall comply with Toxic Substances Limitations immediately upon adoption of this Order.

b. Monitoring for PAHs shall be done using USEPA Method 610, or other analytical methods with comparable detection limits. The effluent limitation for PAHs is 0.31 μg/l, and is lower than the currently achievable detection limits (at reasonable cost to the discharger). Providing that the discharger is using acceptable analytical methods, and results indicate non-detectable concentrations, the discharger is considered to be in compliance with the effluent limitation. If USEPA 610 method shows detectable amount, Discharger may use USEPA 625 method to verify the detection.

7. In reviewing compliance with Wet Weather Flows and 85% Removal for BOD_5 and TSS of this Order, the Board will take into consideration difficulties encountered in achieving compliance during periods of extreme wet weather when ordinary treatment plant removal efficiencies are impeded by less concentrated influent resultant from stormwater dilution.

8. In reviewing compliance with Wet Weather Overflows of this Order, the Board will take into consideration the discharger's efforts to control wet weather overflows in accordance with the Basin Plan's strategy for control of wet weather overflows.

9. Source Control / Pollution Prevention Program

a. The discharger shall continue to implement its source control program to reduce toxic pollutant loadings to the treatment plant and, subsequently, to receiving waters.

b. The discharger shall expand its current program if target constituents are found to be in significant non-compliance with effluent limits.

c. The discharger shall submit annual reports, beginning September 15, 1996, that document its efforts and present an evaluation of the program's success.

10. If the discharger chooses to pursue a capacity increase for the treatment plant, information that must be submitted prior to Board consideration of a flow increase must include, but may not be limited to, the following:

    a. Engineering reports documenting adequate reliability, capacity and performance of the completed improvements to the treatment facility;

    b. Documentation that increased discharges (evaluation must include assessment of wet weather flows) will not result in degradation of receiving waters, or adverse impacts on beneficial uses of receiving waters, in accordance with State and Federal regulations;

    c. Plans for including reuse of the treated effluent as an integral part of the wastewater management plan; and

    d. Documentation of compliance with the CEQA.

11. The discharger shall review, and update as necessary, its Operations and Maintenance Manual, annually, or within 90 days of completion of any significant facility or process changes. The discharger shall submit to the Board, by April 15 of each year, a letter describing the results of the review process including an estimated time schedule for completion of any revisions determined necessary, and a description or copy of any completed revisions.

12. Annually, the discharger shall review and update as necessary, its Contingency Plan as required by Board Resolution 74-10. The discharge of pollutants in violation of this Order where the discharger has failed to develop and/or adequately implement a contingency plan will be the basis for considering such discharge a willful and negligent violation of this Order pursuant to Section 13387 of the California Water Code. Plan revisions, or a letter stating that no changes are needed, shall be submitted to the Board by April 15 of each year.

13. The discharger shall implement a program to regularly review and evaluate its wastewater collection, treatment and disposal facilities in order to ensure that all facilities are adequately staffed, supervised, financed, operated, maintained, repaired, and upgraded as necessary, in order to provide adequate and reliable transport, treatment, and disposal of all wastewater from both existing and planned future wastewater sources under the discharger's service responsibilities. A Treatment Facilities Evaluation Program report discussing the status of this evaluation program, including any recommended or planned actions, shall be submitted to the Board by April 15 of each year.

14. The discharger shall comply with the Self-Monitoring Program for this order, as adopted by the Board and as may be amended by the Executive Officer.

15. The discharger shall comply with all applicable items of the attached "Standard Provisions and Reporting Requirements " dated August 1993 (attached), or any amendments thereafter.

16. In the event of any change in control or ownership of land or waste discharge facilities presently owned or controlled by the discharger, the discharger shall notify the succeeding owner or operator of the existence of this Order by letter, a copy of which shall be immediately forwarded to this office. To assume operation of this Order, the succeeding owner or operator must apply in writing to the Executive Officer requesting transfer of the Order. (Refer to Standard Provisions, referenced above). The request must contain the requesting entity's full legal name, the address and telephone number of the persons responsible for contact with the Board and a statement. The statement shall comply with the signatory paragraph described in Standard Provisions and state that the new owner or operator assumes full responsibility for compliance with this Order. Failure to submit the request shall be considered a discharge without requirements, a violation of the California Water Code.

17. The Board may modify, or revoke and reissue, this Order and Permit if present or future investigations demonstrate that the discharge(s) governed by this Order are causing or significantly contributing to adverse impacts on water quality and/or beneficial uses of the receiving waters.

18. This Order expires on September 13, 2000. The discharger must file a report of waste discharge in accordance with Title 23, Division 3, Chapter 9, Article 3. of the California Administrative Code not later than 120 days before this expiration date as application for reissuance of waste discharge requirements.

19. This Order shall serve as a NPDES permit pursuant to Section 402 of the Clean Water Act or amendments thereto, and shall become effective 10 days after the date of its adoption provided the Regional Administrator, USEPA, has no objection. If the Regional Administrator objects to its issuance, the permit shall not become effective until such objection is withdrawn.

I, Lawrence P. Kolb, Acting Executive Officer, do hereby certify that the foregoing is a full, true, and correct copy of an order adopted by the California Regional Water Quality Control Board, San Francisco Bay Region, on September 13, 1995.

LAWRENCE P. KOLB
Acting Executive Officer

Attachments:

A. Location/Site Maps
B. Treatment Process Schematic Diagram
C. Contingency Plan - Regional Water Board Resolution No. 74-10
D. Self-Monitoring Program
E. Regional Water Board NPDES Standard Provisions and Reporting Requirements - August 1993

Attachment A: Location/Site Maps

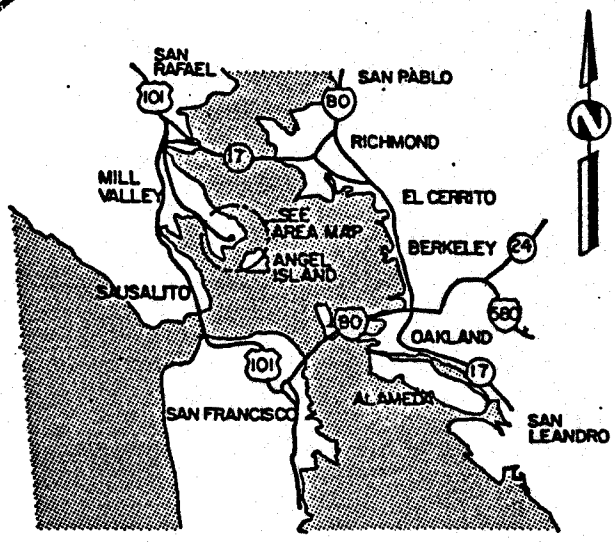

LOCATION MAP

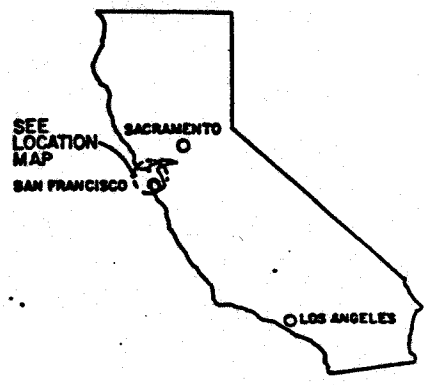

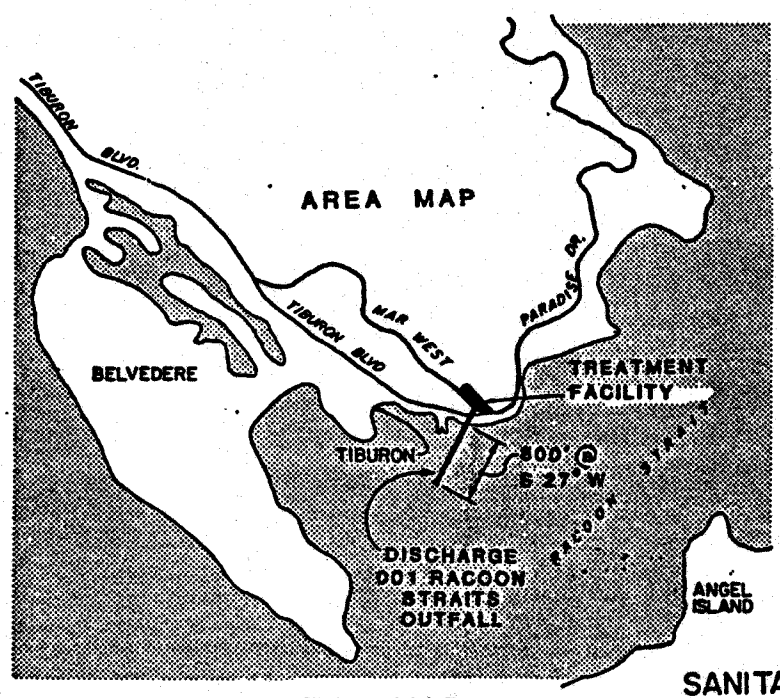

AREA MAP

SANITARY DISTRICT NO. 5
OF MARIN COUNTY

LOCATION AND
AREA MAP

LOCATION MAP
SANITARY DISTRICT NO. 5 OF MARIN
TIBURON, CALIFORNIA
DISCHARGE SERIAL NO. 001
MARCH, 1984 PG 1 OF 1 FIGURE IB-1

Attachment B: Treatment Process Schematic Diagram

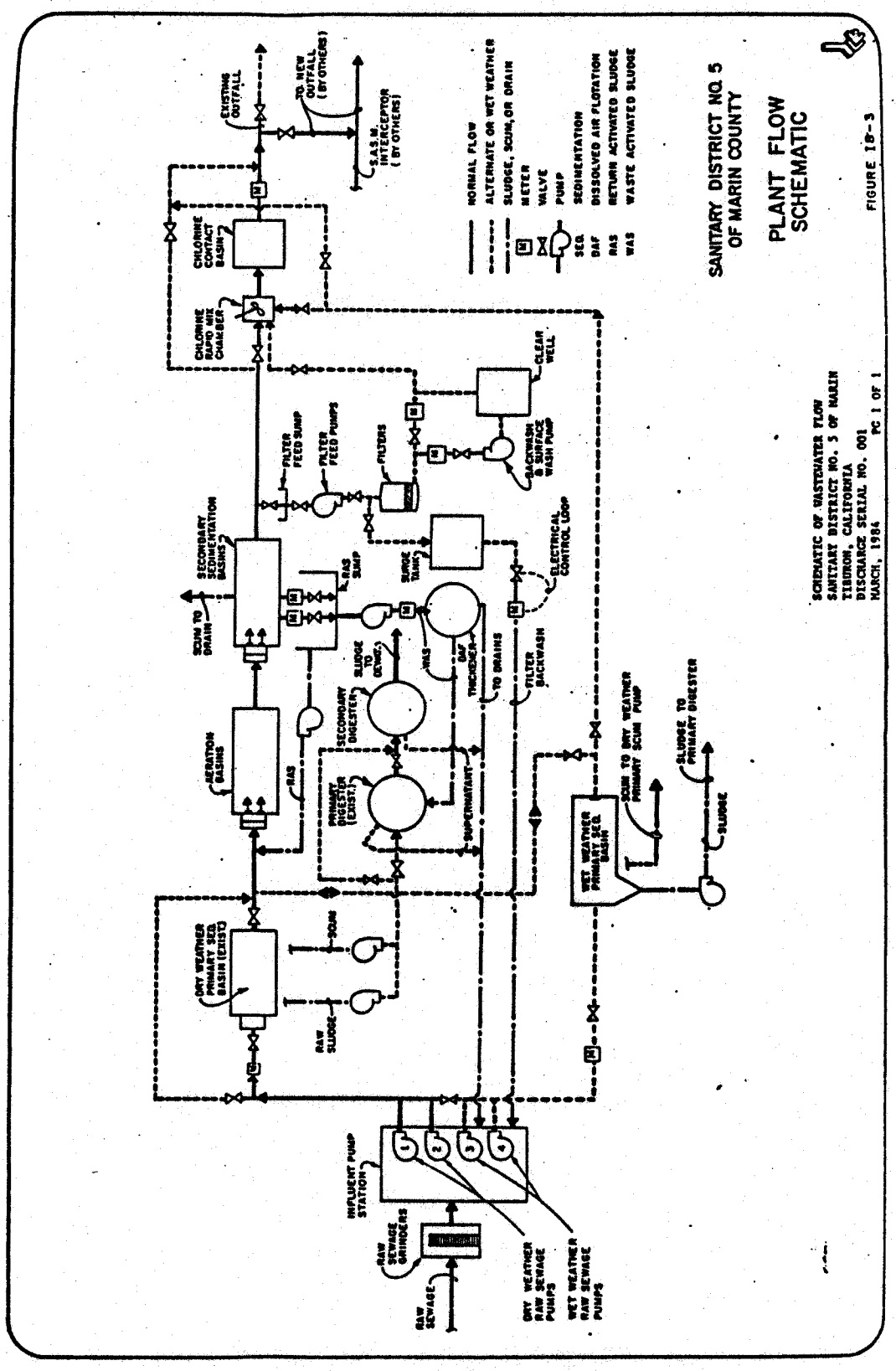

CALIFORNIA REGIONAL WATER QUALITY CONTROL BOARD
SAN FRANCISCO BAY REGION

TENTATIVE
SELF-MONITORING PROGRAM

FOR

SANITARY DISTRICT NO. 5
TIBURON
MARIN COUNTY

NPDES PERMIT NO. CA0037753

ORDER NO. 95-187

CONSISTS OF

PART A
(Self-Monitoring Program, Part A, NPDES Permits; dated August 1993.)

AND

PART B

SELF-MONITORING PROGRAM
PART B

FOR
SANITARY DISTRICT NO. 5

I. DESCRIPTION OF SAMPLING STATIONS

Station	Description
A. INFLUENT	
A-001	At any point in the treatment facilities headworks at which all waste tributary to the system is present and preceding any phase of treatment.
B. EFFLUENT	
E-001	At any point in the outfall between the point of discharge and the point at which all waste tributary to the outfall is present. (May be the same as E-001-D).
E-001-D	At any point in the disinfection facilities for Waste E-001 at which adequate contact with the disinfectant is assured.
E-001-S	At any point in the disposal facilities following dechlorination.
C. RECEIVING WATERS	
C-1	At a point in Racoon Straits directly above the center of the discharge diffuser.
C-2	At a point in Racoon Straits located 200 feet upstream from the center of the discharge diffuser.
C-3	At a point in Racoon Straits located 200 feet downstream from the center of the discharge diffuser.
C-4	At a point in Racoon Straits located 1000 feet upstream from the center of the discharge diffuser.

D. LAND OBSERVATIONS

P-1 thru P-'n'	Located at the corners and midpoints of the perimeter fenceline surrounding the treatment facilities. (A sketch showing the locations of these stations will accompany each report).

E. OVERFLOWS AND BYPASSES

O-1 thru O-'n'	At points in the collection system including manholes, pump stations, or any other location where overflows or bypasses occur.
NOTES:	A map and description of each known overflow or bypass location shall accompany the Self Monitoring Report for each month.

II. SCHEDULE OF SAMPLING, MEASUREMENTS, AND ANALYSIS

The schedule of sampling, measurements and analysis shall be that given as Table I and Table I Footnotes.

III. REPORTING REQUIREMENTS

A. General Reporting Requirements are described in Section E of the Board's "Standard Provisions and Reporting Requirements for NPDES Surface Water Discharge Permits", dated August 1993.

B. A Self-Monitoring Report shall be submitted for each calendar month. The report shall be received no later than the 15th day of the following month. The required contents of these reports are described in Section F.4 of Part A.

C. An Annual Report shall be submitted for each calendar year. The report shall be submitted to the Board by February 15 of the following year. The required contents of the report are described in Section F.5 of Part A. The report shall also include information regarding the amount of sludge disposed of, and the landfill(s) to which it was sent.

D. Any overflow, bypass or significant non-compliance incident that may endanger health or the environment shall be reported in accordance with Sections F.1 and F.2 of Part A, and any additional reporting guidance as may be provided by Board staff. The date, time, duration, location, estimated volume of wastewater discharged, and corrective actions taken for these events shall be reported in the monthly Self-Monitoring Reports.

IV. MODIFICATION OF PART A (AUGUST 1993)

A. This monitoring program does not include the following sections of Part A:

C.2.d; C.2.f; C.3; C.4; C.5; D.4; and E.3.

B. This monitoring program includes the following modifications of Part A:

Section F.5, Annual Reporting -- The first sentence is revised to read:

'The discharger shall submit to the Board an Annual Report for each calendar year, to be received no later than February 15 of the following year.'

I, Lawrence P. Kolb, Acting Executive Officer, hereby certify that the foregoing Self-Monitoring Program:

1. Has been developed in accordance with the procedure set forth in this Regional Board's Resolution 73-16 in order to obtain data and document compliance with waste discharge requirements established in Regional Board Order No. 95-187.

2. May be reviewed at any time subsequent to the effective date upon written notice from the Executive Officer or request from the discharger, and revisions will be ordered by the Executive Officer.

3. Is effective as of September 13, 1995.

Lawrence P. Kolb
Acting Executive Officer

Attachment: Table I - Schedule for Sampling, Measurements and Analyses

TABLE 1
SCHEDULE FOR SAMPLING, MEASUREMENTS, AND ANALYSIS [1] [11]

Sampling Station:	A-001		E-001			E-001-S		O	P	C
Type of Sample: **Parameter** (units) [notes]	C-24	Co	G	C-24	Co	C-24	G	Ob	Ob	G
Flow Rate (mgd) [2]		D			D					
BOD_5 (mg/L & kg/d)	W			W						
Chlorine Residual (mg/L) [3]							Co/2h			
Settleable Matter (ml/L-hr)			W							
TSS (mg/L & kg/d)	W			W						
Oil & Grease (mg/L & kg/d) [4]			Q							
Total Coliform (MPN/100 ml) [5]							W			
Acute Toxicity (% Surv.) [6]						M				
Ammonia Nitrogen (mg/L & kg/d)							D [7]			
Nitrate Nitrogen (mg/L & kg/d)										
Nitrite Nitrogen (mg/L & kg/d)										
Total Organic Nitrogen (mg/L & kg/d)										
Turbidity (NTU)						D [8]				
pH (units)						D [8]	D [7]			
D.O. (mg/L & % Sat)			D				D [7]			
Temperature (° C)							D [7]			
Apparent Color (color units)										
Total & Dissolved Sulfides (mg/L) [9]			D							
Arsenic (µg/L & kg/d)				Q						
Cadmium (µg/L & kg/d)				Q						
Chromium IV (µg/L & kg/d)				Q						
Copper (µg/L & kg/d)				M						
Cyanide (µg/L & kg/d)				Q						
Silver (µg/L & kg/d)				Q						
Lead (µg/L & kg/d)				Q						

TABLE 1 (continued)
SCHEDULE FOR SAMPLING, MEASUREMENTS, AND ANALYSIS

Sampling Station:	A-001		E-001			E-001-S		O	P	C
Type of Sample: **Parameter** (units) [notes]	C-24	Co	G	C-24	Co	C-24	G	Ob	Ob	G
Mercury (µg/L & kg/d)				M						
Nickel (µg/L & kg/d)				Q						
Selenium (µg/L & kg/d)				Q						
Zinc (µg/L & kg/d)				Q						
Phenols (µg/L & kg/d)				2/Y						
PAHs (µg/L & kg/d) [10]				Q						
Applicable Standard Observations			D					E		
Unionized Ammonia (mg/L as N)										

LEGEND FOR TABLE 1:

Types of Stations:

A = treatment facility influent
E = treatment facility effluent
O = overflow and bypass points
P = treatment facility perimeter
C = receiving water

Types of Samples:

C-24 = composite sample, 24 hours
Co = continuous sampling
G = grab sample
Ob = observation

Frequency of Sampling:

D = once each day
W = once each week
2/W = two times each week (on separate days)
3/W = three times each week (on separate days)
M = once each month
2/M = twice each month (with at least two week intervals)
Q = once each calendar quarter (with at least two month intervals)
2/Y = once in March and once in September
E = each occurrence
Co/2h = continuous or every two hours

FOOTNOTES FOR TABLE 1

[1] BYPASS MONITORING

During any time when bypassing occurs from any treatment process (primary, secondary, chlorination, dechlorination, etc.) in the treatment facilities, the self-monitoring program shall include the following sampling and analyses in addition to the Table 1 schedule:

a. When bypassing occurs from any primary or secondary treatment unit(s), composite samples on an hourly basis for the duration of the bypass event for BOD and TSS analyses, grab samples at least daily for Settleable Matter and Oil and Grease analyses; and continuous monitoring of flow.

b. When bypassing the chlorination process, grab samples at least daily for Total Coliform analyses; and continuous monitoring of flow.

c. When bypassing the dechlorination process, grab samples hourly for chlorine residual; and continuous monitoring of flow.

[2] FLOW MONITORING

Flows shall be measured continuously, and recorded and reported Daily. For effluent flows, the following information shall also be reported, monthly:

Average Daily Flow	(mgd)
Maximum Daily Flow	(mgd)
Minimum Daily Flow	(mgd)

[3] Chlorine Residual concentrations shall be monitored both prior to and following dechlorination. The chlorine residual analyzer at the reclamation facility shall be equipped with an alarm relayed to a central station.

[4] Each Oil and Grease sample shall consist of three grab samples taken at equal intervals during the sampling date, with each grab sample being collected in a glass container and analyzed separately. Results shall be expressed as a weighted average of the three values, based upon the instantaneous flow rates occurring at the time of each grab sample. Each glass container used for sample collection shall be thoroughly rinsed with solvent as soon as possible after use, and the solvent rinsings shall be added to the wastewater sample for extraction and analysis.

If the plant is not staffed 24 hours per day, then the three grab samples may be taken at approximately equal intervals during the period that the plant is staffed.

In the event that sampling for oil and grease every quarter shows an apparent violation of the waste discharge permit 30-day average limitation (considering the result of one day's sampling as a 30-day average), then the sampling frequency shall be increased to weekly, so that a true 30-day average can be computed and compliance can be determined.

[5] Effluent Total coliform may be analyzed once per week. However, effluent which is reclaimed and distributed must be analyzed at a minimum of 3 times per week.

[6] Fish Toxicity shall be determined using parallel, 96-hour, flow through bioassays using 24-hour composite samples representative of the discharged effluent. One specie shall be three-spined stickleback, and the other shall be either rainbow trout or fathead minnow. Effluent used for fish bioassays must be undiluted, disinfected, dechlorinated effluent.

[7] These parameters shall be tested for only on the sample stream used for the flow-through bioassays, beginning at the start of the bioassay and then daily for the duration of the bioassay test (i.e. at 0,24, 48, 72, and 96 hours from the start of the bioassay test).

[8] An in-line turbidimeter and pH meter shall continuously monitor effluent quality at the facility. Both of these meters shall be equipped with an alarm relayed to a central station.

[9] Testing Total & Dissolved Sulfides only if DO < 2.0 mg/l, otherwise, Sulfides only.

[10] Polynuclear Aromatic Hydrocarbons (PAHs) shall be tested for as identified by EPA method 610. If a discharge sample exceeds the effluent limitation for PAHs (Effluent Limitation B.5.12.), the concentrations of the individual constituent PAHs shall be reported.

[11] Grab samples shall be taken on day(s) of composite sampling.