CALIFORNIA Water Boards

EDMUND G. BROWN JR. GOVERNOR

MATTHEW RODRIQUEZ SECRETARY FOR ENVIRONMENTAL PROTECTION

San Francisco Bay Regional Water Quality Control Board

ORDER No. R2-2013-0031
NPDES No. CA0030058

The following discharger is subject to waste discharge requirements (WDRs) set forth in this Order.

Table 1. Discharger Information

Discharger	Bottling Group, LLC
Facility Name	Bottling Group Hayward Plant
Facility Address	29000 Hesperian Boulevard Hayward, CA 94545
CIWQS Place Number	211788

Table 2. Discharge Locations

Discharge Point	Effluent Description	Discharge Point Latitude (North)	Discharge Point Longitude (West)	Receiving Water
001	Reverse Osmosis Concentrate	37.61295º N	-122.08191º W	Old Alameda Creek

Table 3. Administrative Information

This Order was adopted on:	September 11, 2013
This Order shall become effective on:	November 1, 2013
This Order shall expire on:	October 31, 2018
The Discharger shall file a Report of Waste Discharge as an application for reissuance of WDRs in accordance with California Code of Regulations, title 23, and an application for reissuance of a National Pollutant Discharge Elimination System (NPDES) permit no later than:	May 31, 2018
The U.S. Environmental Protection Agency (U.S. EPA) and the California Regional Water Quality Control Board, San Francisco Bay Region, have classified this discharge as follows:	Minor

I, Bruce H. Wolfe, Executive Officer, do hereby certify that this Order with all attachments is a full, true, and correct copy of the Order adopted by the California Regional Water Quality Control Board, San Francisco Bay Region, on the date indicated above.

Bruce Wolfe

Digitally signed by Bruce H. Wolfe
Date: 2013.09.17 16:52:18 -07'00'

Bruce H. Wolfe, Executive Officer

Contents

I. Facility Information 3
II. Findings 3
III. Discharge Prohibitions 4
IV. Effluent Limitations and Discharge Specifications 4
  A. Effluent Limitations 4
  B. Whole Effluent Acute Toxicity 4
V. Receiving Water Limitations 5
VI. Provisions 6
  A. Standard Provisions 6
  B. Monitoring and Reporting 6
  C. Special Provisions 6

Tables

Table 1. Discharger Information 1
Table 2. Discharge Locations 1
Table 3. Administrative Information 1
Table 4. Effluent Limitations 4

Attachments

Attachment A – Definitions A-1
Attachment B – Facility Maps B-1
Attachment C – Process Flow Diagram C-1
Attachment D – Federal Standard Provisions D-1
Attachment E – Monitoring and Reporting Program (MRP) E-1
Attachment F – Fact Sheet F-1
Attachment G – Regional Standard Provisions and Monitoring and Reporting Requirements G-1

I. FACILITY INFORMATION

Information describing the Bottling Group Hayward Plant (Plant) is summarized in Table 1 and in Fact Sheet (Attachment F) sections I and II.

II. FINDINGS

The California Regional Water Quality Control Board, San Francisco Bay Region (Regional Water Board), finds:

A. Legal Authorities. This Order serves as WDRs pursuant to California Water Code article 4, chapter 4, division 7 (commencing with § 13260). This Order is also issued pursuant to federal Clean Water Act (CWA) section 402 and implementing regulations adopted by U.S. EPA and Water Code chapter 5.5, division 7 (commencing with § 13370). It shall serve as an NPDES permit for point source discharges from this facility to surface waters.

B. Background and Rationale for Requirements. The Regional Water Board developed the requirements in this Order based on information the Discharger submitted as part of its application, information obtained through monitoring and reporting programs, and other available information. The Fact Sheet (Attachment F) contains background information and rationale for the requirements in this Order and is hereby incorporated into and constitutes findings for this Order. Attachments A through E, G, and H are also incorporated into this Order.

C. Provisions and Requirements Implementing State Law. No provisions and requirements in this Order are included to implement State law only.

D. Notification of Interested Parties. The Regional Water Board notified the Discharger and interested agencies and persons of its intent to prescribe these WDRs and provided an opportunity to submit written comments and recommendations. The Fact Sheet provides details regarding the notification.

E. Consideration of Public Comment. The Regional Water Board, in a public meeting, heard and considered all comments pertaining to the discharge. The Fact Sheet provides details regarding the public hearing.

THEREFORE, IT IS HEREBY ORDERED that Order No. R2-2008-0056 (previous order) is rescinded upon the effective date of this Order except for enforcement purposes, and, in order to meet the provisions of Water Code division 7 (commencing with § 13000) and regulations adopted thereunder, and the provisions of the CWA and regulations and guidelines adopted thereunder, the Discharger shall comply with the requirements in this Order. This action in no way prevents the Regional Water Board from taking enforcement action for past violations of the previous order.

III. DISCHARGE PROHIBITIONS

A. Discharge of treated wastewater at a location or in a manner different from that described in this Order is prohibited.

B. Discharge greater than a monthly average flow of 143,000 gallons per day is prohibited.

IV. EFFLUENT LIMITATIONS AND DISCHARGE SPECIFICATIONS

A. Effluent Limitations

The Discharger shall comply with the following effluent limitations at Discharge Point No. 001, with compliance measured at Monitoring Location EFF-001 as described in the MRP.

Table 4. Effluent Limitations

Parameter	Units	Instantaneous Minimum	Instantaneous Maximum
pH [1]	s.u.	6.0	9.0
Total Residual Chlorine	mg/L	---	0.0 [2]

Unit Abbreviations:

mg/L = milligrams per liter
s.u. = standard units

Footnotes:

[1] If the Discharger monitors pH continuously, pursuant to 40 C.F.R. section 401.17 the Discharger shall be in compliance with this pH limitation provided that both of the following conditions are satisfied: (i) the total time during which the pH is outside the required range shall not exceed 7 hours and 26 minutes in any calendar month; and (ii) no individual excursion from the required pH range shall exceed 60 minutes.

[2] This requirement is defined as below the limit of detection of standard test methods (0.05 mg/L), as defined in the latest edition of Standard Test Methods for the Examination of Water and Wastewater. The Discharger may elect to use a continuous on-line monitoring system for measuring or determining that residual dechlorinating agent is present. This monitoring system may be used to prove that anomalous residual chlorine exceedances measured by on-line chlorine analyzers are false positives and are not violations of this total residual chlorine limit because it is chemically improbable to have chlorine present in the presence of sodium bisulfite.

B. Whole Effluent Acute Toxicity

Discharges at Discharge Point No. 001 shall comply with the following limitations, with compliance measured at Monitoring Location EFF-001 as described in the MRP:

1. Three-sample median value of not less than 90 percent survival; and

2. Single-sample value of not less than 70 percent survival.

Bioassays shall be performed using the most up-to-date U.S. EPA protocols and species as specified in MRP. If these protocols prove unworkable, the Executive Officer and the Environmental Laboratory Accreditation Program may grant exceptions in writing upon the Discharger's request with justification.

V. RECEIVING WATER LIMITATIONS

A. The discharge shall not cause the following conditions to exist in receiving waters at any place:

1. Floating, suspended, or deposited macroscopic particulate matter or foams;

2. Bottom deposits or aquatic growths to the extent that such deposits or growths cause nuisance or adversely affect beneficial uses;

3. Alteration of temperature, turbidity, or apparent color beyond present natural background levels;

4. Visible, floating, suspended, or deposited oil or other products of petroleum origin; or

5. Toxic or other deleterious substances in concentrations or quantities that cause deleterious effects on wildlife, waterfowl, or other aquatic biota, or render any of these unfit for human consumption, either at levels created in the receiving waters or as a result of biological concentration.

B. The discharge shall not cause the following limits to be exceeded in receiving waters at any place within one foot of the water surface:

1.	Dissolved Oxygen	7.0 mg/L, minimum The median dissolved oxygen concentration for any three consecutive months shall not be less than 80% of the dissolved oxygen content at saturation. When natural factors cause concentrations less than that specified above, the discharge shall not cause further reduction in ambient dissolved oxygen concentrations.
2.	Dissolved Sulfide	Natural background levels
3.	pH	The pH shall not be depressed below 6.5 or raised above 8.5. The discharge shall not cause changes greater than 0.5 pH units in normal ambient pH levels.
4.	Nutrients	Waters shall not contain biostimulatory substances in concentrations that promote aquatic growths to the extent that such growths cause nuisance or adversely affect beneficial uses.

C. The discharge shall not cause a violation of any water quality standard for receiving waters adopted by the Regional Water Board or State Water Board as required by the CWA and regulations adopted thereunder. If more stringent water quality standards are promulgated or approved pursuant to CWA section 303, or amendments thereto, the Regional Water Board may revise or modify this Order in accordance with the more stringent standards.

VI. PROVISIONS

A. Standard Provisions

1. The Discharger shall comply with all "Standard Provisions" in Attachment D.

2. The Discharger shall comply with all applicable provisions of the "Regional Standard Provisions, and Monitoring and Reporting Requirements for NPDES Wastewater Discharge Permits" (Attachment G).

B. Monitoring and Reporting

The Discharger shall comply with the MRP (Attachment E), and future revisions thereto, and applicable sampling and reporting requirements in Attachments D and G.

C. Special Provisions

1. Reopener Provisions

The Regional Water Board may modify or reopen this Order prior to its expiration date in any of the following circumstances as allowed by law:

a. If present or future investigations demonstrate that the discharges governed by this Order have or will have a reasonable potential to cause or contribute to, or will cease to have, adverse impacts on water quality or beneficial uses of the receiving waters.

b. If new or revised water quality objectives or total maximum daily loads (TMDLs) come into effect for San Francisco Bay and contiguous water bodies (whether Statewide, regional, or site-specific). In such cases, effluent limitations in this Order may be modified as necessary to reflect the updated water quality objectives and wasteload allocations in the TMDLs. Adoption of the effluent limitations in this Order is not intended to restrict in any way future modifications based on legally adopted water quality objectives or TMDLs or as otherwise permitted under federal regulations governing NPDES permit modifications.

c. If translator, dilution, or other water quality studies provide a basis for determining that a permit condition should be modified.

d. If State Water Board precedential decisions, new policies, new laws, or new regulations are adopted.

e. If an administrative or judicial decision on a separate NPDES permit or waste discharge requirements addresses requirements similar to this discharge.

f. Or as otherwise authorized by law.

The Discharger may request a permit modification based on any of the circumstances above. With any such request, the Discharger shall include antidegradation and anti-backsliding analyses.

With the consent of the Discharger, the Executive Officer may make minor modifications to this Order for the purposes set forth in 40 C.F.R. section 122.63.

2. Effluent Characterization Study and Report

a. Study Elements. The Discharger shall continue to characterize and evaluate the discharge from the following discharge points to verify that the "no" or "cannot determine" reasonable potential analysis conclusions of this Order remain valid and to inform the next permit reissuance. The Discharger shall collect representative samples at EFF-001 and REC-001, as defined in the MRP, at a frequency of no less than once per five years.

The samples shall be analyzed for the priority pollutants listed in Attachment G, Table C. Compliance with this requirement shall be achieved in accordance with the specifications of Attachment G, sections III.A.1 and III.A.2.

The Discharger shall evaluate after priority pollutants are analyzed if concentrations of any of these priority pollutants significantly increase over past performance. The Discharger shall investigate the cause of any such increase. The investigation may include, but need not be limited to, an increase in monitoring frequency, monitoring of internal process streams, and monitoring of influent sources. The Discharger shall establish remedial measures addressing any increase resulting in reasonable potential to cause or contribute to an excursion above applicable water quality objectives.

b. Reporting Requirements

i. Routine Reporting. The Discharger shall, within 30 days of receipt of analytical results, report the following in the transmittal letter for the appropriate self-monitoring report:

(a) Indication that a sample for this characterization study was collected; and

(b) Identity of priority pollutants detected at or above applicable water quality criteria (see Fact Sheet Table F-4 for the criteria), and the detected concentrations of those pollutants.

ii. Final Report. The Discharger shall submit a final report that presents all these data with the application for permit reissuance.

ATTACHMENT A – DEFINITIONS

Arithmetic Mean (μ)
Also called the average, the sum of measured values divided by the number of samples. For ambient water concentrations, the arithmetic mean is calculated as follows:

Arithmetic mean = $\mu = \Sigma x / n$ where: Σx is the sum of the measured ambient water concentrations, and n is the number of samples.

Average Monthly Effluent Limitation (AMEL)
The highest allowable average of daily discharges over a calendar month, calculated as the sum of all daily discharges measured during a calendar month divided by the number of daily discharges measured during that month.

Average Weekly Effluent Limitation (AWEL)
The highest allowable average of daily discharges over a calendar week (Sunday through Saturday), calculated as the sum of all daily discharges measured during a calendar week divided by the number of daily discharges measured during that week.

Bioaccumulative
Taken up by an organism from its surrounding medium through gill membranes, epithelial tissue, or from food and subsequently concentrated and retained in the body of the organism.

Carcinogenic
Known to cause cancer in living organisms.

Coefficient of Variation
Measure of data variability calculated as the estimated standard deviation divided by the arithmetic mean of the observed values.

Daily Discharge
Either: (1) the total mass of the constituent discharged over the calendar day (12:00 am through 11:59 pm) or any 24-hour period that reasonably represents a calendar day for purposes of sampling (as specified in the permit) for a constituent with limitations expressed in units of mass; or (2) the unweighted arithmetic mean measurement of the constituent over the day for a constituent with limitations expressed in other units of measurement (e.g., concentration).

The daily discharge may be determined by the analytical results of a composite sample taken over the course of one day (a calendar day or other 24-hour period defined as a day) or by the arithmetic mean of analytical results from one or more grab samples taken over the course of the day.

For composite sampling, if 1 day is defined as a 24-hour period other than a calendar day, the analytical result for the 24-hour period is considered the result for the calendar day in which the 24-hour period ends.

Detected, but Not Quantified (DNQ)
Sample result less than the RL, but greater than or equal to the laboratory's MDL. Sample results reported as DNQ are estimated concentrations.

Dilution Credit
Amount of dilution granted to a discharge in the calculation of a water quality-based effluent limitation, based on the allowance of a specified mixing zone. It is calculated from the dilution ratio or determined by conducting a mixing zone study or modeling the discharge and receiving water.

Dry Weather
Any weather not defined as wet weather.

Effluent Concentration Allowance (ECA)
Value derived from the water quality criterion/objective, dilution credit, and ambient background concentration that is used, in conjunction with the CV for the effluent monitoring data, to calculate a long-term average (LTA) discharge concentration. The ECA has the same meaning as waste load allocation (WLA) as used in U.S. EPA guidance (*Technical Support Document For Water Quality-based Toxics Control*, March 1991, second printing, EPA/505/2-90-001).

Enclosed Bay
Indentation along the coast that encloses an area of oceanic water within a distinct headlands or harbor works. Enclosed bays include all bays where the narrowest distance between the headlands or outermost harbor works is less than 75 percent of the greatest dimension of the enclosed portion of the bay. Enclosed bays include, but are not limited to, Humboldt Bay, Bodega Harbor, Tomales Bay, Drake's Estero, San Francisco Bay, Morro Bay, Los Angeles-Long Beach Harbor, Upper and Lower Newport Bay, Mission Bay, and San Diego Bay. Enclosed bays do not include inland surface waters or ocean waters.

Estimated Chemical Concentration
Concentration that results from the confirmed detection of the substance below the ML value by the analytical method.

Estuaries
Waters, including coastal lagoons, located at the mouths of streams that serve as areas of mixing for fresh and ocean waters. Coastal lagoons and mouths of streams that are temporarily separated from the ocean by sandbars are considered estuaries. Estuarine waters are considered to extend from a bay or the open ocean to a point upstream where there is no significant mixing of fresh water and seawater. Estuarine waters include, but are not limited to, the Sacramento-San Joaquin Delta, as defined in Water Code section 12220, Suisun Bay, Carquinez Strait downstream to the Carquinez Bridge, and appropriate areas of the Smith, Mad, Eel, Noyo, Russian, Klamath, San Diego, and Otay rivers. Estuaries do not include inland surface waters or ocean waters.

Inland Surface Waters
All surface waters of the state that do not include the ocean, enclosed bays, or estuaries.

Instantaneous Maximum Effluent Limitation
Highest allowable value for any single grab sample or aliquot (i.e., each grab sample or aliquot is independently compared to the instantaneous maximum limitation).

Instantaneous Minimum Effluent Limitation
Lowest allowable value for any single grab sample or aliquot (i.e., each grab sample or aliquot is independently compared to the instantaneous minimum limitation).

Maximum Daily Effluent Limitation (MDEL)
Highest allowable daily discharge of a pollutant, over a calendar day (or 24-hour period). For pollutants with limitations expressed in units of mass, the daily discharge is calculated as the total mass of the pollutant discharged over the day. For pollutants with limitations expressed in other units of measurement, the daily discharge is calculated as the arithmetic mean measurement of the pollutant over the day.

Median
Middle measurement in a set of data. The median of a set of data is found by first arranging the measurements in order of magnitude (either increasing or decreasing order). If the number of measurements (n) is odd, then the median = $X_{(n+1)/2}$. If n is even, then the median = $(X_{n/2} + X_{(n/2)+1})/2$ (i.e., the midpoint between n/2 and n/2+1).

Method Detection Limit (MDL)
Minimum concentration of a substance that can be measured and reported with 99 percent confidence that the analyte concentration is greater than zero, as defined in in 40 C.F.R. part 136, Attachment B, revised as of July 3, 1999.

Minimum Level (ML)
Concentration at which the entire analytical system gives a recognizable signal and acceptable calibration point. The ML is the concentration in a sample that is equivalent to the concentration of the lowest calibration standard analyzed by a specific analytical procedure, assuming that all the method specified sample weights, volumes, and processing steps have been followed.

Mixing Zone
Limited volume of receiving water allocated for mixing with a wastewater discharge where water quality criteria can be exceeded without causing adverse effects to the overall water body.

Not Detected (ND)
Sample results less than the laboratory's MDL.

Persistent Pollutants
Substances for which degradation or decomposition in the environment is nonexistent or very slow.

Pollutant Minimization Program
Program of waste minimization and pollution prevention actions that include, but are not limited to, product substitution, waste stream recycling, alternative waste management methods, and education of the public and businesses. The goal of the Pollutant Minimization Program is to reduce all potential sources of a priority pollutant through pollutant minimization (control) strategies, including pollution prevention measures as appropriate, to maintain the effluent concentration at or below the water quality-based effluent limitation. Pollution prevention measures may be particularly appropriate for persistent bioaccumulative priority pollutants where there is evidence that beneficial uses are being impacted. Cost effectiveness may be considered when establishing the requirements of a Pollutant Minimization Program. The completion and implementation of a Pollution Prevention Plan, if required pursuant to Water Code section 13263.3(d), is considered to fulfill Pollutant Minimization Program requirements.

Pollution Prevention
Any action that causes a net reduction in the use or generation of a hazardous substance or other pollutant that is discharged into water and includes, but is not limited to, input change, operational

improvement, production process change, and product reformulation (as defined in Water Code section 13263.3). Pollution prevention does not include actions that merely shift a pollutant in wastewater from one environmental medium to another environmental medium, unless clear environmental benefits of such an approach are identified to the satisfaction of the State Water Board or Regional Water Board.

Reporting Level (RL)
ML (and its associated analytical method) chosen by the Discharger for reporting and compliance determination from the MLs included in this Order, including an additional factor if applicable as discussed herein. The MLs included in this Order correspond to approved analytical methods for reporting a sample result that are selected by the Regional Water Board either from SIP Appendix 4 in accordance with SIP section 2.4.2 or established in accordance with SIP section 2.4.3. The ML is based on the proper application of method-based analytical procedures for sample preparation and the absence of any matrix interferences. Other factors may be applied to the ML depending on the specific sample preparation steps employed. For example, the treatment typically applied in cases where there are matrix-effects is to dilute the sample or sample aliquot by a factor of ten. In such cases, this additional factor must be applied to the ML in the computation of the RL.

Source of Drinking Water
Any water designated as having a municipal or domestic supply (MUN) beneficial use.

Standard Deviation (σ)
Measure of variability calculated as follows:

$$\sigma = (\sum[(x - \mu)^2]/(n - 1))^{0.5}$$

where:

x is the observed value;
μ is the arithmetic mean of the observed values; and
n is the number of samples.

Toxicity Reduction Evaluation (TRE)
Study conducted in a step-wise process designed to identify the causative agents of effluent or ambient toxicity, isolate the sources of toxicity, evaluate the effectiveness of toxicity control options, and then confirm the reduction in toxicity. The first steps of the TRE consist of the collection of data relevant to the toxicity, including additional toxicity testing, and an evaluation of facility operations and maintenance practices, and best management practices. A Toxicity Identification Evaluation (TIE) may be required as part of the TRE, if appropriate. A TIE is a set of procedures to identify the specific chemicals responsible for toxicity. These procedures are performed in three phases (characterization, identification, and confirmation) using aquatic organism toxicity tests.

ATTACHMENT B – FACILITY MAPS

Weiss Associates

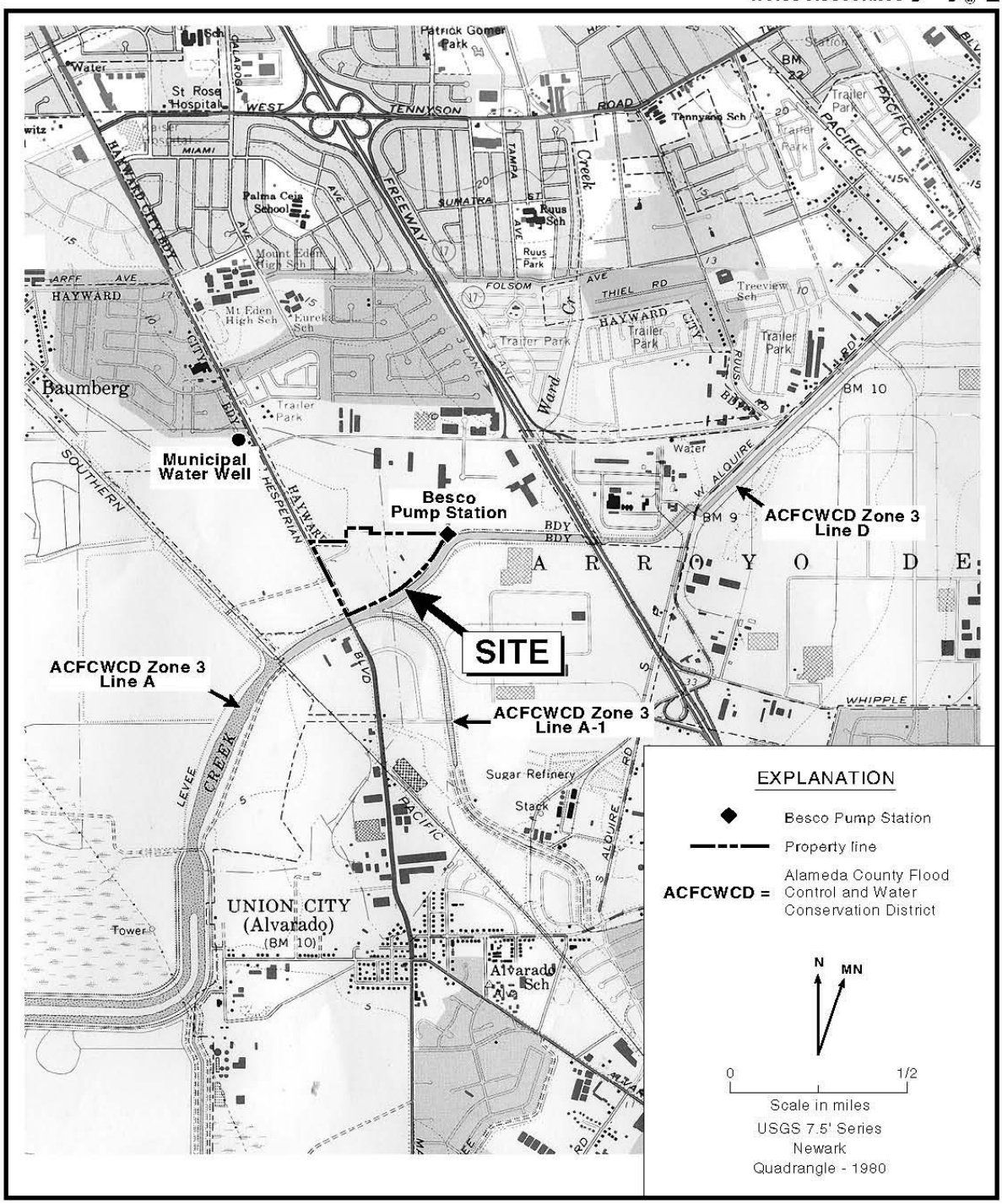

Figure 2. Site Vicinity Map, Bottling Group, LLC, 29000 Hesperian Boulevard, Hayward, California

L:\Pepsi.014\1371-100b.ai 2/20/13

WEISS ASSOCIATES

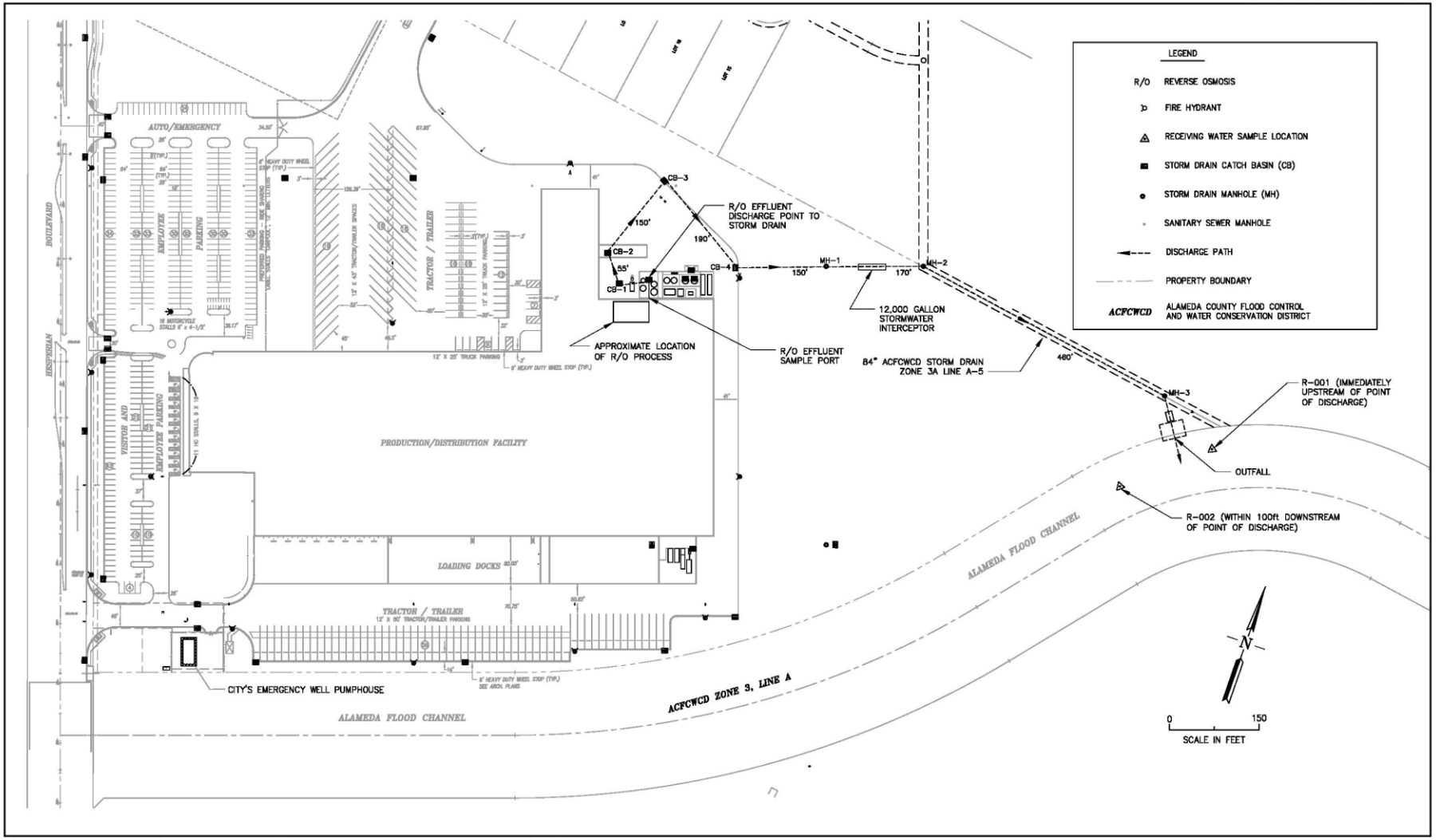

Figure 3. Reverse Osmosis Concentrate Water Discharge Path, Bottling Group LLC, Inc., Hayward, California

FILE: L:\Pepsi.014\1371-105.dwg

DATE: 02/20/13 - 12:00pm

ATTACHMENT C – PROCESS FLOW DIAGRAM

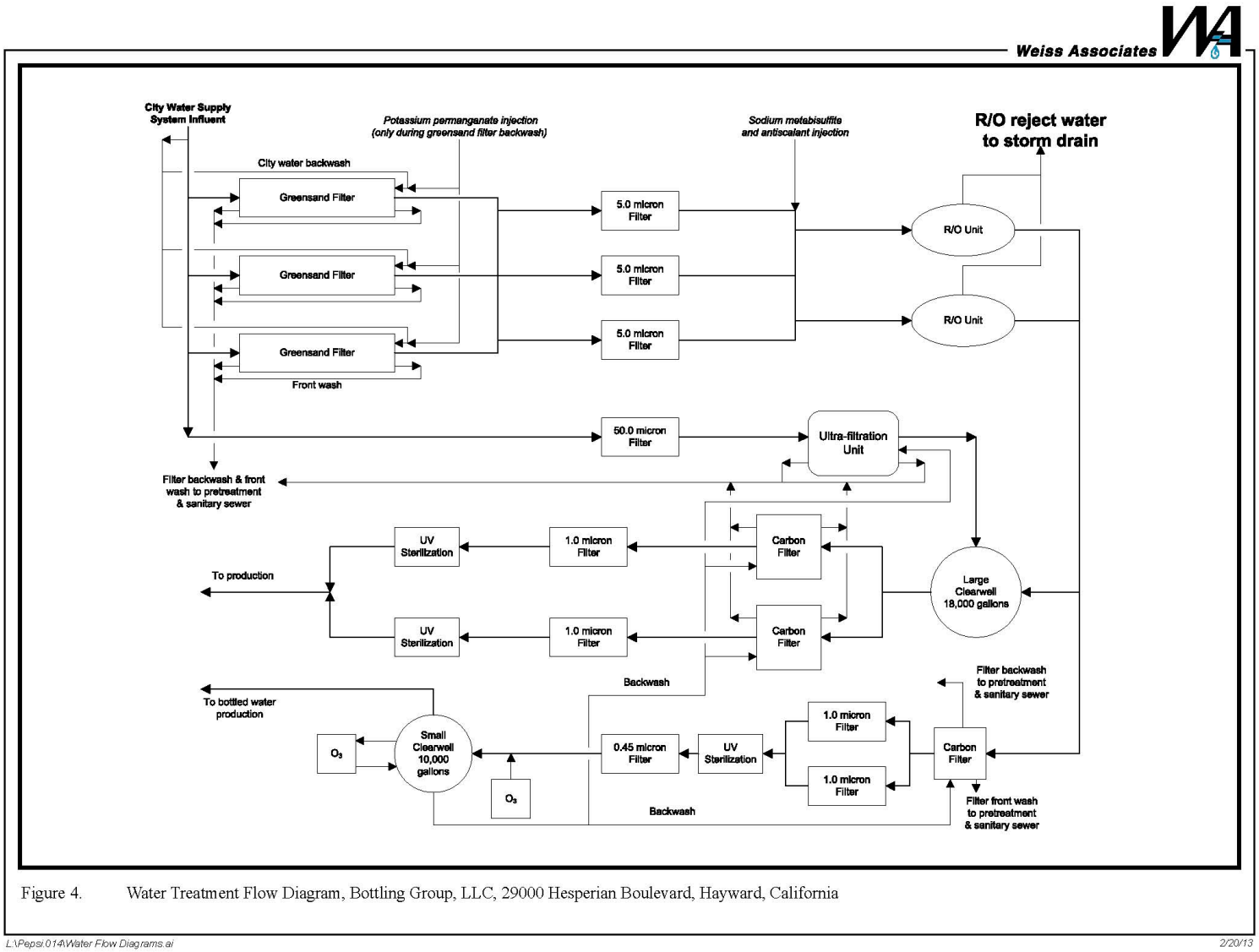

Figure 4. Water Treatment Flow Diagram, Bottling Group, LLC, 29000 Hesperian Boulevard, Hayward, California

ATTACHMENT D –STANDARD PROVISIONS

I. STANDARD PROVISIONS – PERMIT COMPLIANCE

A. Duty to Comply

1. The Discharger must comply with all of the conditions of this Order. Any noncompliance constitutes a violation of the Clean Water Act (CWA) and the California Water Code and is grounds for enforcement action, for permit termination, revocation and reissuance, or modification; or denial of a permit renewal application. (40 C.F.R. § 122.41(a).)

2. The Discharger shall comply with effluent standards or prohibitions established under CWA section 307(a) for toxic pollutants and with standards for sewage sludge use or disposal established under CWA section 405(d) within the time provided in the regulations that establish these standards or prohibitions, even if this Order has not yet been modified to incorporate the requirement. (40 C.F.R. § 122.41(a)(1).)

B. Need to Halt or Reduce Activity Not a Defense

It shall not be a defense for a Discharger in an enforcement action that it would have been necessary to halt or reduce the permitted activity in order to maintain compliance with the conditions of this Order. (40 C.F.R. § 122.41(c).)

C. Duty to Mitigate

The Discharger shall take all reasonable steps to minimize or prevent any discharge or sludge use or disposal in violation of this Order that has a reasonable likelihood of adversely affecting human health or the environment. (40 C.F.R. § 122.41(d).)

D. Proper Operation and Maintenance

The Discharger shall at all times properly operate and maintain all facilities and systems of treatment and control (and related appurtenances) which are installed or used by the Discharger to achieve compliance with the conditions of this Order. Proper operation and maintenance also includes adequate laboratory controls and appropriate quality assurance procedures. This provision requires the operation of backup or auxiliary facilities or similar systems that are installed by a Discharger only when necessary to achieve compliance with the conditions of this Order. (40 C.F.R. § 122.41(e).)

E. Property Rights

1. This Order does not convey any property rights of any sort or any exclusive privileges. (40 C.F.R. § 122.41(g).)

2. The issuance of this Order does not authorize any injury to persons or property or invasion of other private rights, or any infringement of state or local law or regulations. (40 C.F.R. § 122.5(c).)

F. Inspection and Entry

The Discharger shall allow the Regional Water Board, State Water Board, U.S. EPA, or their authorized representatives (including an authorized contractor acting as their representative), upon the presentation of credentials and other documents, as may be required by law, to (40 C.F.R. § 122.41(i); Wat. Code, § 13383):

1. Enter upon the Discharger's premises where a regulated facility or activity is located or conducted, or where records are kept under the conditions of this Order (40 C.F.R. § 122.41(i)(1));

2. Have access to and copy, at reasonable times, any records that must be kept under the conditions of this Order (40 C.F.R. § 122.41(i)(2));

3. Inspect and photograph, at reasonable times, any facilities, equipment (including monitoring and control equipment), practices, or operations regulated or required under this Order (40 C.F.R. § 122.41(i)(3)); and

4. Sample or monitor, at reasonable times, for the purposes of assuring Order compliance or as otherwise authorized by the CWA or the Water Code, any substances or parameters at any location. (40 C.F.R. § 122.41(i)(4).)

G. Bypass

1. Definitions

a. "Bypass" means the intentional diversion of waste streams from any portion of a treatment facility. (40 C.F.R. § 122.41(m)(1)(i).)

b. "Severe property damage" means substantial physical damage to property, damage to the treatment facilities, which causes them to become inoperable, or substantial and permanent loss of natural resources that can reasonably be expected to occur in the absence of a bypass. Severe property damage does not mean economic loss caused by delays in production. (40 C.F.R. § 122.41(m)(1)(ii).)

2. Bypass not exceeding limitations. The Discharger may allow any bypass to occur which does not cause exceedances of effluent limitations, but only if it is for essential maintenance to assure efficient operation. These bypasses are not subject to the provisions listed in Standard Provisions – Permit Compliance I.G.3, I.G.4, and I.G.5 below. (40 C.F.R. § 122.41(m)(2).)

3. Prohibition of bypass. Bypass is prohibited, and the Regional Water Board may take enforcement action against a Discharger for bypass, unless (40 C.F.R. § 122.41(m)(4)(i)):

a. Bypass was unavoidable to prevent loss of life, personal injury, or severe property damage (40 C.F.R. § 122.41(m)(4)(i)(A));

b. There were no feasible alternatives to the bypass, such as the use of auxiliary treatment facilities, retention of untreated wastes, or maintenance during normal periods of equipment downtime. This condition is not satisfied if adequate back-up equipment

should have been installed in the exercise of reasonable engineering judgment to prevent a bypass that occurred during normal periods of equipment downtime or preventive maintenance (40 C.F.R. § 122.41(m)(4)(i)(B)); and

c. The Discharger submitted notice to the Regional Water Board as required under Standard Provisions – Permit Compliance I.G.5 below. (40 C.F.R. § 122.41(m)(4)(i)(C).)

4. Approval. The Regional Water Board may approve an anticipated bypass, after considering its adverse effects, if the Regional Water Board determines that it will meet the three conditions listed in Standard Provisions—Permit Compliance I.G.3 above. (40 C.F.R. § 122.41(m)(4)(ii).)

5. Notice

a. Anticipated bypass. If the Discharger knows in advance of the need for a bypass, it shall submit a notice, if possible at least 10 days before the date of the bypass. (40 C.F.R. § 122.41(m)(3)(i).)

b. Unanticipated bypass. The Discharger shall submit notice of an unanticipated bypass as required in Standard Provisions - Reporting V.E below (24-hour notice). (40 C.F.R. § 122.41(m)(3)(ii).)

H. Upset

Upset means an exceptional incident in which there is unintentional and temporary noncompliance with technology based permit effluent limitations because of factors beyond the reasonable control of the Discharger. An upset does not include noncompliance to the extent caused by operational error, improperly designed treatment facilities, inadequate treatment facilities, lack of preventive maintenance, or careless or improper operation. (40 C.F.R. § 122.41(n)(1).)

1. Effect of an upset. An upset constitutes an affirmative defense to an action brought for noncompliance with such technology based permit effluent limitations if the requirements of Standard Provisions – Permit Compliance I.H.2 below are met. No determination made during administrative review of claims that noncompliance was caused by upset, and before an action for noncompliance, is final administrative action subject to judicial review. (40 C.F.R. § 122.41(n)(2).)

2. Conditions necessary for a demonstration of upset. A Discharger who wishes to establish the affirmative defense of upset shall demonstrate, through properly signed, contemporaneous operating logs or other relevant evidence that (40 C.F.R. § 122.41(n)(3)):

a. An upset occurred and that the Discharger can identify the cause(s) of the upset (40 C.F.R. § 122.41(n)(3)(i));

b. The permitted facility was, at the time, being properly operated (40 C.F.R. § 122.41(n)(3)(ii));

c. The Discharger submitted notice of the upset as required in Standard Provisions—Reporting V.E.2.b below (24-hour notice) (40 C.F.R. § 122.41(n)(3)(iii)); and

d. The Discharger complied with any remedial measures required under Standard Provisions—Permit Compliance I.C above. (40 C.F.R. § 122.41(n)(3)(iv).)

3. Burden of proof. In any enforcement proceeding, the Discharger seeking to establish the occurrence of an upset has the burden of proof. (40 C.F.R. § 122.41(n)(4).)

II. STANDARD PROVISIONS—PERMIT ACTION

A. General

This Order may be modified, revoked and reissued, or terminated for cause. The filing of a request by the Discharger for modification, revocation and reissuance, or termination, or a notification of planned changes or anticipated noncompliance does not stay any Order condition. (40 C.F.R. § 122.41(f).)

B. Duty to Reapply

If the Discharger wishes to continue an activity regulated by this Order after the expiration date of this Order, the Discharger must apply for and obtain a new permit. (40 C.F.R. § 122.41(b).)

C. Transfers

This Order is not transferable to any person except after notice to the Regional Water Board. The Regional Water Board may require modification or revocation and reissuance of the Order to change the name of the Discharger and incorporate such other requirements as may be necessary under the CWA and the Water Code. (40 C.F.R. § 122.41(l)(3); § 122.61.)

III. STANDARD PROVISIONS – MONITORING

A. Samples and measurements taken for the purpose of monitoring shall be representative of the monitored activity. (40 C.F.R. § 122.41(j)(1).)

B. Monitoring results must be conducted according to test procedures under 40 C.F.R. part 136 or, in the case of sludge use or disposal, approved under 40 C.F.R. part 136 unless otherwise specified in 40 C.F.R. part 503 unless other test procedures have been specified in this Order. (40 C.F.R. § 122.41(j)(4); § 122.44(i)(1)(iv).)

IV. STANDARD PROVISIONS—RECORDS

A. Except for records of monitoring information required by this Order related to the Discharger's sewage sludge use and disposal activities, which shall be retained for a period of at least five years (or longer as required by 40 C.F.R. part 503), the Discharger shall retain records of all monitoring information, including all calibration and maintenance records and all original strip chart recordings for continuous monitoring instrumentation, copies of all reports required by this Order, and records of all data used to complete the application for this Order, for a period of at least three (3) years from the date of the sample, measurement, report or application. This period may be extended by request of the Regional Water Board Executive Officer at any time. (40 C.F.R. § 122.41(j)(2).)

B. Records of monitoring information shall include the following:

1. The date, exact place, and time of sampling or measurements (40 C.F.R. § 122.41(j)(3)(i));

2. The individual(s) who performed the sampling or measurements (40 C.F.R. § 122.41(j)(3)(ii));

3. The date(s) the analyses were performed (40 C.F.R. § 122.41(j)(3)(iii));

4. The individual(s) who performed the analyses (40 C.F.R. § 122.41(j)(3)(iv));

5. The analytical techniques or methods used (40 C.F.R. § 122.41(j)(3)(v)); and

6. The results of such analyses. (40 C.F.R. § 122.41(j)(3)(vi).)

C. Claims of confidentiality for the following information will be denied (40 C.F.R. § 122.7(b)):

1. The name and address of any permit applicant or Discharger (40 C.F.R. § 122.7(b)(1)); and

2. Permit applications and attachments, permits, and effluent data. (40 C.F.R. § 122.7(b)(2).)

V. STANDARD PROVISIONS—REPORTING

A. Duty to Provide Information

The Discharger shall furnish to the Regional Water Board, State Water Board, or U.S. EPA within a reasonable time, any information which the Regional Water Board, State Water Board, or U.S. EPA may request to determine whether cause exists for modifying, revoking and reissuing, or terminating this Order or to determine compliance with this Order. Upon request, the Discharger shall also furnish to the Regional Water Board, State Water Board, or U.S. EPA copies of records required to be kept by this Order. (40 C.F.R. § 122.41(h); Wat. Code, § 13267.)

B. Signatory and Certification Requirements

1. All applications, reports, or information submitted to the Regional Water Board, State Water Board, and/or U.S. EPA shall be signed and certified in accordance with Standard Provisions—Reporting V.B.2, V.B.3, V.B.4, and V.B.5 below. (40 C.F.R. § 122.41(k).)

2. For a corporation, all permit applications shall be signed by a responsible corporate officer. For the purpose of this section, a responsible corporate officer means: (i) a president, secretary, treasurer, or vice-president of the corporation in charge of a principal business function, or any other person who performs similar policy- or decision-making functions for the corporation, or (ii) the manager of one or more manufacturing, production, or operating facilities, provided, the manager is authorized to make management decisions which govern the operation of the regulated facility including having the explicit or implicit duty of making major capital investment recommendations, and initiating and directing other comprehensive measures to assure long term environmental compliance with environmental laws and regulations; the manager can ensure that the necessary systems are established or actions taken to gather complete and accurate information for permit application requirements; and where authority to sign documents has been assigned or delegated to the manager in accordance with corporate procedures. (40 C.F.R. § 122.22(a)(1).)

For a partnership or sole proprietorship, all permit applications shall be signed by a general partner or the proprietor, respectively. (40 C.F.R. § 122.22(a)(2).)

For a municipality, state, federal, or other public agency, all permit applications shall be signed by either a principal executive officer or ranking elected official. For purposes of this provision, a principal executive officer of a federal agency includes (i) the chief executive officer of the agency, or (ii) a senior executive officer having responsibility for the overall operations of a principal geographic unit of the agency (e.g., Regional Administrators of U.S. EPA). (40 C.F.R. § 122.22(a)(3).).

3. All reports required by this Order and other information requested by the Regional Water Board, State Water Board, or U.S. EPA shall be signed by a person described in Standard Provisions – Reporting V.B.2 above, or by a duly authorized representative of that person. A person is a duly authorized representative only if:

a. The authorization is made in writing by a person described in Standard Provisions—Reporting V.B.2 above (40 C.F.R. § 122.22(b)(1));

b. The authorization specifies either an individual or a position having responsibility for the overall operation of the regulated facility or activity such as the position of plant manager, operator of a well or a well field, superintendent, position of equivalent responsibility, or an individual or position having overall responsibility for environmental matters for the company. (A duly authorized representative may thus be either a named individual or any individual occupying a named position.) (40 C.F.R. § 122.22(b)(2)); and

c. The written authorization is submitted to the Regional Water Board and State Water Board. (40 C.F.R. § 122.22(b)(3).)

4. If an authorization under Standard Provisions – Reporting V.B.3 above is no longer accurate because a different individual or position has responsibility for the overall operation of the facility, a new authorization satisfying the requirements of Standard Provisions—Reporting V.B.3 above must be submitted to the Regional Water Board and State Water Board prior to or together with any reports, information, or applications, to be signed by an authorized representative. (40 C.F.R. § 122.22(c).)

5. Any person signing a document under Standard Provisions—Reporting V.B.2 or V.B.3 above shall make the following certification:

> "I certify under penalty of law that this document and all attachments were prepared under my direction or supervision in accordance with a system designed to assure that qualified personnel properly gather and evaluate the information submitted. Based on my inquiry of the person or persons who manage the system or those persons directly responsible for gathering the information, the information submitted is, to the best of my knowledge and belief, true, accurate, and complete. I am aware that there are significant penalties for submitting false information, including the possibility of fine and imprisonment for knowing violations." (40 C.F.R. § 122.22(d).)

C. Monitoring Reports

1. Monitoring results shall be reported at the intervals specified in the Monitoring and Reporting Program in this Order. (40 C.F.R. § 122.22(l)(4).)

2. Monitoring results must be reported on a Discharge Monitoring Report (DMR) form or forms provided or specified by the Regional Water Board or State Water Board for reporting results of monitoring of sludge use or disposal practices. (40 C.F.R. § 122.41(l)(4)(i).)

3. If the Discharger monitors any pollutant more frequently than required by this Order using test procedures approved under 40 C.F.R. part 136, or another method required for an industry-specific waste stream under 40 C.F.R. subchapters N or O, the results of such monitoring shall be included in the calculation and reporting of the data submitted in the DMR or sludge reporting form specified by the Regional Water Board. (40 C.F.R. § 122.41(l)(4)(ii).)

4. Calculations for all limitations, which require averaging of measurements, shall utilize an arithmetic mean unless otherwise specified in this Order. (40 C.F.R. § 122.41(l)(4)(iii).)

D. Compliance Schedules

Reports of compliance or noncompliance with, or any progress reports on, interim and final requirements contained in any compliance schedule of this Order, shall be submitted no later than 14 days following each schedule date. (40 C.F.R. § 122.41(l)(5).)

E. Twenty-Four Hour Reporting

1. The Discharger shall report any noncompliance that may endanger health or the environment. Any information shall be provided orally within 24 hours from the time the Discharger becomes aware of the circumstances. A written submission shall also be provided within five (5) days of the time the Discharger becomes aware of the circumstances. The written submission shall contain a description of the noncompliance and its cause; the period of noncompliance, including exact dates and times, and if the noncompliance has not been corrected, the anticipated time it is expected to continue; and steps taken or planned to reduce, eliminate, and prevent reoccurrence of the noncompliance. (40 C.F.R. § 122.41(l)(6)(i).)

2. The following shall be included as information that must be reported within 24 hours under this paragraph (40 C.F.R. § 122.41(l)(6)(ii)):

a. Any unanticipated bypass that exceeds any effluent limitation in this Order. (40 C.F.R. § 122.41(l)(6)(ii)(A).)

b. Any upset that exceeds any effluent limitation in this Order. (40 C.F.R. § 122.41(l)(6)(ii)(B).)

3. The Regional Water Board may waive the above-required written report under this provision on a case-by-case basis if an oral report has been received within 24 hours. (40 C.F.R. § 122.41(l)(6)(iii).)

F. Planned Changes

The Discharger shall give notice to the Regional Water Board as soon as possible of any planned physical alterations or additions to the permitted facility. Notice is required under this provision only when (40 C.F.R. § 122.41(l)(1)):

1. The alteration or addition to a permitted facility may meet one of the criteria for determining whether a facility is a new source in 40 C.F.R. section 122.29(b) (40 C.F.R. § 122.41(l)(1)(i)); or

2. The alteration or addition could significantly change the nature or increase the quantity of pollutants discharged. This notification applies to pollutants that are not subject to effluent limitations in this Order. (Alternatively, for an existing manufacturing, commercial, mining, or silvicultural discharge as referenced in 40 C.F.R. section 122.42(a), this notification applies to pollutants that are subject neither to effluent limitations in this Order nor to notification requirements under 40 C.F.R. section 122.42(a)(1) (see Additional Provisions—Notification Levels VII.A.1).) (40 C.F.R. § 122.41(l)(1)(ii).)

3. The alteration or addition results in a significant change in the Discharger's sludge use or disposal practices, and such alteration, addition, or change may justify the application of permit conditions that are different from or absent in the existing permit, including notification of additional use or disposal sites not reported during the permit application process or not reported pursuant to an approved land application plan. (40 C.F.R. § 122.41(l)(1)(iii).)

G. Anticipated Noncompliance

The Discharger shall give advance notice to the Regional Water Board or State Water Board of any planned changes in the permitted facility or activity that may result in noncompliance with this Order's requirements. (40 C.F.R. § 122.41(l)(2).)

H. Other Noncompliance

The Discharger shall report all instances of noncompliance not reported under Standard Provisions—Reporting V.C, V.D, and V.E above at the time monitoring reports are submitted. The reports shall contain the information listed in Standard Provision—Reporting V.E above. (40 C.F.R. § 122.41(l)(7).)

I. Other Information

When the Discharger becomes aware that it failed to submit any relevant facts in a permit application, or submitted incorrect information in a permit application or in any report to the Regional Water Board, State Water Board, or U.S. EPA, the Discharger shall promptly submit such facts or information. (40 C.F.R. § 122.41(l)(8).)

VI. STANDARD PROVISIONS – ENFORCEMENT

A. The Regional Water Board is authorized to enforce the terms of this Order under several provisions of the Water Code, including, but not limited to, sections 13385, 13386, and 13387.

VII. ADDITIONAL PROVISIONS—NOTIFICATION LEVELS

A. Non-Municipal Facilities

Existing manufacturing, commercial, mining, and silvicultural Dischargers shall notify the Regional Water Board as soon as they know or have reason to believe (40 C.F.R. § 122.42(a)):

1. That any activity has occurred or will occur that would result in the discharge, on a routine or frequent basis, of any toxic pollutant that is not limited in this Order, if that discharge will exceed the highest of the following "notification levels" (40 C.F.R. § 122.42(a)(1)):
   - **a.** 100 micrograms per liter (µg/L) (40 C.F.R. § 122.42(a)(1)(i));
   - **b.** 200 µg/L for acrolein and acrylonitrile; 500 µg/L for 2,4-dinitrophenol and 2-methyl-4,6-dinitrophenol; and 1 milligram per liter (mg/L) for antimony (40 C.F.R. § 122.42(a)(1)(ii));
   - **c.** Five (5) times the maximum concentration value reported for that pollutant in the Report of Waste Discharge (40 C.F.R. § 122.42(a)(1)(iii)); or
   - **d.** The level established by the Regional Water Board in accordance with section 122.44(f). (40 C.F.R. § 122.42(a)(1)(iv).)
2. That any activity has occurred or will occur that would result in the discharge, on a non-routine or infrequent basis, of any toxic pollutant that is not limited in this Order, if that discharge will exceed the highest of the following "notification levels" (40 C.F.R. § 122.42(a)(2)):
   - **a.** 500 micrograms per liter (µg/L) (40 C.F.R. § 122.42(a)(2)(i));
   - **b.** 1 milligram per liter (mg/L) for antimony (40 C.F.R. § 122.42(a)(2)(ii));
   - **c.** Ten (10) times the maximum concentration value reported for that pollutant in the Report of Waste Discharge (40 C.F.R. § 122.42(a)(2)(iii)); or
   - **d.** The level established by the Regional Water Board in accordance with section 122.44(f). (40 C.F.R. § 122.42(a)(2)(iv).)

B. Publicly-Owned Treatment Works (POTWs)

All POTWs shall provide adequate notice to the Regional Water Board of the following (40 C.F.R. § 122.42(b)):

1. Any new introduction of pollutants into the POTW from an indirect discharger that would be subject to CWA sections 301 or 306 if it were directly discharging those pollutants (40 C.F.R. § 122.42(b)(1)); and
2. Any substantial change in the volume or character of pollutants being introduced into that POTW by a source introducing pollutants into the POTW at the time of adoption of this Order. (40 C.F.R. § 122.42(b)(2).)
3. Adequate notice shall include information on the quality and quantity of effluent introduced into the POTW as well as any anticipated impact of the change on the quantity or quality of effluent to be discharged from the POTW. (40 C.F.R. § 122.42(b)(3).)

ATTACHMENT E – MONITORING AND REPORTING PROGRAM (MRP)

Contents

I. General Monitoring Provisions E-2
II. Monitoring Locations E-2
III. Effluent Monitoring Requirements E-2
IV. Whole Effluent Toxicity Testing Requirements E-3
V. Receiving Water Monitoring Requirements E-4
VI. Reporting Requirements E-4
  A. General Monitoring and Reporting Requirements E-4
  B. Self-Monitoring Reports (SMRs) E-4
  C. Discharge Monitoring Reports (DMRs) E-7
VII. Modifications to Attachment G E-8

Tables

Table E-1. Monitoring Locations E-2
Table E-2. Effluent Monitoring E-2
Table E-3. Receiving Water Monitoring E-4
Table E-4. CIWQS Reporting E-5
Table E-5. Monitoring Periods E-6

ATTACHMENT E – MONITORING AND REPORTING PROGRAM (MRP)

The Code of Federal Regulations (40 C.F.R. § 122.48) requires that all NPDES permits specify monitoring and reporting requirements. Water Code sections 13267 and 13383 also authorize the Regional Water Board to require technical and monitoring reports. This MRP establishes monitoring and reporting requirements that implement federal and State regulations.

I. GENERAL MONITORING PROVISIONS

A. The Discharger shall comply with this MRP. The Executive Officer may amend this MRP pursuant to 40 C.F.R. sections 122.62, 122.63, and 124.5. If any discrepancies exist between this MRP and the "Regional Standard Provisions, and Monitoring and Reporting Requirements (Supplement to Attachment D) for NPDES Wastewater Discharge Permits" (Attachment G), this MRP shall prevail.

B. The Discharger shall conduct all monitoring in accordance with Attachment D, section III, as supplemented by Attachment G. Equivalent test methods must be more sensitive than those specified in 40 C.F.R. section 136 and must be specified in this permit.

II. MONITORING LOCATIONS

The Discharger shall establish the following monitoring locations to demonstrate compliance with the effluent limitations, discharge specifications, and other requirements in this Order:

Table E-1. Monitoring Locations

Type of Monitoring Location	Monitoring Location Name	Monitoring Location Description [1]
Effluent	EFF-001	At any point in the outfall between the point of discharge and the point at which all wastes tributary to the discharge are present. *at or about latitude 37.61295 N, longitude -122.08191 W*
Effluent	EFF-001A	At any point in the 12,000-gallon stormwater interceptor or the adjacent downstream outlet box. *at or about latitude 37.61348 N, longitude -122.08081 W*
Receiving Water	REC-001	At any point in Alameda Creek immediately upstream of the point of discharge. *at or about latitude 37.61316 N, longitude -122.07842 W*
Receiving Water	REC-002	At any point in Alameda Creek within 100 feet downstream of the point of discharge. *at or about latitude 37.61287 N, longitude -122.07877 W*

III. EFFLUENT MONITORING REQUIREMENTS

The Discharger shall monitor treated effluent at EFF-001 and EFF-001A as follows:

Table E-2. Effluent Monitoring

Parameter	Units	Sample Type	Location	Minimum Sampling Frequency
Flow [1]	MGD	Continuous	EFF-001	Continuous/D
Chlorine Residual [2]	mg/L	Grab	EFF-001 or EFF-001A	1/Month
pH	Standard units	Grab	EFF-001	1/Week
Acute Toxicity	% Survival	Grab	EFF-001	1/Year

Unit Abbreviations:

MGD = million gallons per day
mg/L = milligrams per liter

Sample Type:

Continuous = measured continuously
Grab = grab sample

Sampling Frequency:

Continuous/D = measured continuously, and recorded and reported daily
1/Week = once per week
1/Month = once per month
1/Year = once per year

Footnotes:

[1] The Discharger shall measure flow continuously and record flow daily, except on weekends and holidays when the Discharger's facility has limited staff to take measurements. During these periods, the average daily flow volume may be calculated by dividing the total flow volume for the period by the number of days of the period. The Discharger shall note when reporting these values that they are averages taken over multiple days. For each calendar month, the average daily flow shall be calculated by dividing the total flow volume for the month by the number of days in the month. The Discharger shall report the following information in quarterly self-monitoring reports:

- Daily flow (MGD)
- Monthly average flow (MGD)
- Total monthly flow volume (MG)
- Maximum and minimum daily flow rates (MGD)

[2] Analysis of chlorine residual shall use a method with a detection limit no greater than 0.05 mg/L. If the residual chlorine measurement at EFF-001 is above the detection limit, the Discharger may resample chlorine residual at EFF-001A and report only the value collected at EFF-001A.

IV. WHOLE EFFLUENT TOXICITY TESTING REQUIREMENTS

The Discharger shall monitor whole effluent acute toxicity as follows:

1. Compliance with the acute toxicity effluent limitations at Discharge Point No. 001 (Monitoring Location EFF-001) shall be evaluated by measuring survival of test organisms exposed to 96-hour static renewal bioassays.

2. Test organisms shall be fathead minnows (*Pimphales promelas*). The Executive Officer may specify a more sensitive organism or, if testing a particular organism proves unworkable, the most sensitive organism available.

3. All bioassays shall be performed according to the most up-to-date protocols in 40 C.F.R. part 136, currently *Methods for Measuring the Acute Toxicity of Effluents and Receiving Water to Freshwater and Marine Organisms*, 5th Edition (EPA-821-R-02-012).

4. If the Discharger demonstrates that specific identifiable substances in the discharge are rapidly rendered harmless upon discharge to the receiving water, compliance with the acute toxicity limit may be determined after test samples are adjusted to remove the influence of those substances. Written acknowledgement that the Executive Officer concurs with the Discharger's demonstration and that the adjustment will not remove the influence of other substances must be obtained prior to any such adjustment. The Discharger may manually adjust the pH of whole effluent acute toxicity samples prior to performing bioassays to minimize ammonia toxicity interference.

5. Bioassay water monitoring shall include, on a daily basis, pH, dissolved oxygen, ammonia (if toxicity is observed), temperature, hardness, and alkalinity. These results shall be reported. If a

violation of an acute toxicity limit occurs, the bioassay test shall be repeated with new fish as soon as practical and shall be repeated until a test fish survival rate of 90 percent or greater is observed. If the control fish survival rate is less than 90 percent, the bioassay test shall be restarted with new fish and shall continue as soon as practical until an acceptable test is completed (i.e., control fish survival rate is 90 percent or greater).

V. RECEIVING WATER MONITORING REQUIREMENTS

The Discharger shall monitor receiving waters at REC-001 and REC-002 as follows:

Table E-3. Receiving Water Monitoring

Parameter	Units	Sample Type	Minimum Sampling Frequency
Dissolved Oxygen	mg/L	Grab	1/Quarter
Sulfide[1]	mg/L	Grab	1/Quarter
Salinity[2]	ppt or PSU	Grab	1/Quarter
pH	Standard units	Grab	1/Quarter
Standard Observations[3]	---	---	1/Quarter

Unit Abbreviations:

mg/L = milligrams per liter
ppt = part per thousand
PSU = practical salinity units

Sample Type:

Grab= Grab sample

Sampling Frequency:

1/Quarter = once per quarter

Footnotes:

[1] The Discharger shall monitor for sulfide when the dissolved oxygen is less than 2.0 mg/L.

[2] Salinity shall be analyzed using a method with a detection limit less than or equal to 1 ppt.

[3] Standard observations are described in Attachment G.

VI. REPORTING REQUIREMENTS

A. General Monitoring and Reporting Requirements

The Discharger shall comply with all Standard Provisions (Attachments D and G) related to monitoring, reporting, and recordkeeping, with modifications shown in section IX, below.

B. Self-Monitoring Reports (SMRs)

1. **SMR Format.** The Discharger shall electronically submit SMRs using the State Water Board's California Integrated Water Quality System (CIWQS) Web site (http://www.waterboards.ca.gov/ciwqs/index.html). The CIWQS website will provide additional information for SMR submittal in the event of a planned service interruption for electronic submittal.

2. **SMR Due Dates and Contents.** The Discharger shall submit SMRs by the due dates, and with the contents, specified below:

a. **Quarterly SMRs —** Quarterly SMRs shall be due 30 days after the end of each quarter (January-March, April-June, July-September, and October-December) covering that quarter. The quarterly SMR shall contain the applicable items described in sections V.B and V.C of both Attachments D and G of this Order. See Provision VI.C.2 (Effluent Characterization Study and Report) of this Order for information that must also be reported with quarterly SMRs.

   Quarterly SMRs shall include all new monitoring results obtained since the last SMR was submitted. If the Discharger monitors any pollutant more frequently than required by this Order, the Discharger shall include the results of such monitoring in the calculations and reporting for the SMR.

b. **Annual SMR —** Annual SMRs shall be due February 1 each year, covering the previous calendar year. The annual SMR shall contain the items described in sections V.C.1.f of Attachment G. See also Provisions VI.C.2 (Effluent Characterization Study and Report) of the Order for requirements to submit reports with the annual SMR.

c. **Specifications for Submitting SMRs to CIWQS —** The Discharger shall submit analytical results and other information using one of the following methods:

Table E-4. CIWQS Reporting

Parameter	Method of Reporting	
	EDF/CDF data upload or manual entry	**Attached File**
All parameters identified in influent, effluent, and receiving water monitoring tables (except Dissolved Oxygen and Temperature)	Required for all results	
Dissolved Oxygen Temperature	Required for monthly maximum and minimum results only [1]	Discharger may use this method for all results or keep records
Cyanide Arsenic Cadmium Chromium Copper Lead Mercury Nickel Selenium Silver Zinc Dioxins and Furans (by U.S. EPA Method 1613)	Required for all results [2]	
Antimony Beryllium Thallium Other Pollutants (by U.S. EPA methods 601, 602, 608, 610, 614, 624, and 625)	Not required (unless identified in influent, effluent, or receiving water monitoring tables), but encouraged [1]	Discharger may use this method and submit results with application for permit reissuance, unless data are submitted by CDF/EDF upload
Volume and Duration of Blended Discharge [3]	Required for all blended effluent discharges	
Analytical Method	Not required (Discharger may select "data unavailable") [1]	

Parameter	Method of Reporting	
	EDF/CDF data upload or manual entry	Attached File
Collection Time Analysis Time	Not required (Discharger may select "0:00") [1]	

Footnotes:

[1] The Discharger shall continue to monitor at the minimum frequency specified in this MRP, keep records of the measurements, and make the records available upon request.

[2] These parameters require EDF/CDF data upload or manual entry regardless of whether monitoring is required by this MRP or other provisions of this Order (except for biosolids, sludge, or ash provisions).

[3] The requirement for volume and duration of blended discharge applies only if this Order authorizes the Discharger to discharge blended effluent.

The Discharger shall arrange all reported data in a tabular format and summarize data to clearly illustrate whether the Plant is operating in compliance with effluent limitations. The Discharger is not required to duplicate the submittal of data entered in a tabular format within CIWQS. When electronic submittal of data is required and CIWQS does not provide for entry into a tabular format, the Discharger shall electronically submit the data in a tabular format as an attachment.

3. **Monitoring Periods.** Monitoring periods for all required monitoring shall be as set forth below unless otherwise specified:

Table E-5. Monitoring Periods

Sampling Frequency	Monitoring Period Begins On…	Monitoring Period
Continuous	Permit effective date	All
1/Hour	Permit effective date	Hourly
1/Day	Permit effective date	Midnight through 11:59 p.m. or any 24-hour period that reasonably represents a calendar day for purposes of sampling.
1/Week	Sunday following permit effective date or on permit effective date if on Sunday	Sunday through Saturday
1/Month	First day of calendar month following permit effective date or on permit effective date if on first day of month	First day of calendar month through last day of calendar month
1/Year	January 1	January 1 through December 31
1/Quarter	Closest January 1, April 1, July 1, or October 1 following (or on) permit effective date	January 1 through March 31 April 1 through June 30 July 1 through September 30 October 1 through December 31
1/5 Years	Permit effective date	Once during the Order term no more than 12 months prior to applying for permit reissuance.

4. **RL and MDL Reporting.** The Discharger shall report with each sample result the Reporting Level (RL) and Method Detection Limit (MDL) as determined by the procedure in 40 C.F.R. part 136. The Discharger shall report the results of analytical determinations for the presence of chemical constituents in a sample using the following reporting protocols:

a. Sample results greater than or equal to the RL shall be reported as measured by the laboratory (i.e., the measured chemical concentration in the sample).

b. Sample results less than the RL, but greater than or equal to the laboratory's MDL, shall be reported as "Detected, but Not Quantified," or DNQ. The estimated chemical concentration of the sample shall also be reported.

For purposes of data collection, the laboratory shall write the estimated chemical concentration next to DNQ. The laboratory may, if such information is available, include numerical estimates of the data quality for the reported result. Numerical estimates of data quality may be percent accuracy (+/- a percentage of the reported value), numerical ranges (low to high), or any other means the laboratory considers appropriate.

c. Sample results less than the laboratory's MDL shall be reported as "Not Detected" or ND.

d. The Discharger shall instruct laboratories to establish calibration standards so that the minimum level (ML) value (or its equivalent if there is differential treatment of samples relative to calibration standards) is the lowest calibration standard. At no time is the Discharger to use analytical data derived from extrapolation beyond the lowest point of the calibration curve.

5. **Compliance Determination.** Compliance with effluent limitations for priority pollutants shall be determined using sample reporting protocols defined above and in the Fact Sheet and Attachments A, D, and G. For purposes of reporting and administrative enforcement by the Regional Water Board and State Water Board, the Discharger shall be deemed out of compliance with effluent limitations if the concentration of the priority pollutant in the monitoring sample is greater than the effluent limitation and greater than or equal to the reporting level (RL).

C. Discharge Monitoring Reports (DMRs)

1. At any time during the term of this Order, the State Water Board or Regional Water Board may notify the Discharger to electronically submit DMRs. Until such notification is given, the Discharger shall submit DMRs in accordance with the requirements described below.

2. Once notified by the State Water Board or Regional Water Board, the Discharger shall submit hard copy DMRs. The Discharger shall sign and certify DMRs as Attachment D requires. The Discharger shall submit the original DMR and one copy of the DMR to one of the addresses listed below:

Standard Mail	FedEx/UPS/Other Private Carriers
State Water Resources Control Board Division of Water Quality c/o DMR Processing Center PO Box 100 Sacramento, CA 95812-1000	State Water Resources Control Board Division of Water Quality c/o DMR Processing Center 1001 I Street, 15th Floor Sacramento, CA 95814

3. All discharge monitoring results shall be reported on official U.S. EPA pre-printed DMR forms (EPA Form 3320-1) or self-generated forms that follow the exact same format as EPA Form 3320-1.

VII. MODIFICATIONS TO ATTACHMENT G

This MRP modifies Attachment G as indicated below:

A. Attachment G section I.C.1 (Contingency Plan) is deleted.

B. Attachment G sections V.C.1.f and V.C.1.g are revised as follows, and section V.C.1.h (Reporting data in electronic format) is deleted.

f. Annual self-monitoring report requirements

By the date specified in the MRP, the Discharger shall submit an annual report to the Regional Water Board covering the previous calendar year. The report shall contain the following:

1) Annual compliance summary table of treatment plant performance, including documentation of any blending events (this summary table is not required if the Discharger has submitted the year's monitoring results to CIWQS in electronic reporting format by EDF/CDF upload or manual entry);

2) Comprehensive discussion of treatment plant performance and compliance with the permit (This discussion shall include any corrective actions taken or planned, such as changes to facility equipment or operation practices that may be needed to achieve compliance, and any other actions taken or planned that are intended to improve performance and reliability of the Discharger's wastewater collection, treatment, or disposal practices.);

3) Both tabular and graphical summaries of the monitoring data for the previous year if parameters are monitored at a frequency of monthly or greater (this item is not required if the Discharger has submitted the year's monitoring results to CIWQS in electronic reporting format by EDF/CDF upload or manual entry);

4) List of approved analyses, including the following:

(i) List of analyses for which the Discharger is certified;

(ii) List of analyses performed for the Discharger by a separate certified laboratory (copies of reports signed by the laboratory director of that laboratory shall not be submitted but be retained onsite); and

(iii) List of "waived" analyses, as approved;

5) Plan view drawing or map showing the Discharger's facility, flow routing, and sampling and observation station locations;

6) Results of annual facility inspection to verify that all elements of the SWPP Plan are accurate and up to date (only required if the Discharger does not route all stormwater to the headworks of its wastewater treatment plant); and

7) Results of facility report reviews (The Discharger shall regularly review, revise, and update, as necessary, the O&M Manual, the Spill Prevention Plan, and Wastewater Facilities Status Report so that these documents remain useful and relevant to current practices. At a minimum, reviews shall be conducted annually. The Discharger shall include, in each Annual Report, a description or summary of review and evaluation procedures, recommended or planned actions, and an estimated time schedule for implementing these actions. The Discharger shall complete changes to these documents to ensure they are up-to-date.).

g. Report submittal

The Discharger shall submit SMRs addressed as follows, unless the Discharger submits SMRs electronically to CIWQS:

California Regional Water Quality Control Board
San Francisco Bay Region
1515 Clay Street, Suite 1400
Oakland, CA 94612
Attn: NPDES Wastewater Division

h. Reporting data in electronic format – *Deleted*

C. Attachment G sections V.E.2, V.E.2.a, and V.E.2.c are revised as follows, and sections V.E.2.b (24-hour Certification) and V.E.2.d (Communication Protocol) are deleted.

2. Unauthorized Discharges from Municipal Wastewater Treatment Plants[1]

The following requirements apply to municipal wastewater treatment plants that experience an unauthorized discharge at their treatment facilities and supersede requirements imposed on the Discharger by the Executive Officer by letter of May 1, 2008.

a. Two (2)-Hour Notification

For any unauthorized discharges that enter a drainage channel or a surface water, the Discharger shall, as soon as possible, but not later than two (2) hours after becoming aware of the discharge, notify the California Emergency Management Agency (CalEMA, currently 800-852-7550), the local health officers or directors of environmental health with jurisdiction over the affected water bodies, and the Regional Water Board. Timely

[1] California Code of Regulations, Title 23, Section 2250(b), defines an unauthorized discharge to be a discharge, not regulated by waste discharge requirements, of treated, partially treated, or untreated wastewater resulting from the intentional or unintentional diversion of wastewater from a collection, treatment or disposal system.

notification by the Discharger to CalEMA also satisfies notification to the Regional Water Board. Notification shall include the following:

1) Incident description and cause;

2) Location of threatened or involved waterway(s) or storm drains;

3) Date and time the unauthorized discharge started;

4) Estimated quantity and duration of the unauthorized discharge (to the extent known), and the estimated amount recovered;

5) Level of treatment prior to discharge (e.g., raw wastewater, primary treated, undisinfected secondary treated, and so on); and

6) Identity of the person reporting the unauthorized discharge.

b. 24-hour Certification – *Deleted*

c. 5-day Written Report

Within five business days, the Discharger shall submit a written report that includes, in addition to the information required above, the following:

1) Methods used to delineate the geographical extent of the unauthorized discharge within receiving waters;

2) Efforts implemented to minimize public exposure to the unauthorized discharge;

3) Visual observations of the impacts (if any) noted in the receiving waters (e.g., fish kill, discoloration of water) and the extent of sampling if conducted;

4) Corrective measures taken to minimize the impact of the unauthorized discharge;

5) Measures to be taken to minimize the chances of a similar unauthorized discharge occurring in the future;

6) Summary of Spill Prevention Plan or O&M Manual modifications to be made, if necessary, to minimize the chances of future unauthorized discharges; and

7) Quantity and duration of the unauthorized discharge, and the amount recovered.

d. Communication Protocol – *Deleted*

ATTACHMENT F - FACT SHEET

Contents

I. Permit Information F-2
II. Facility Description F-3
III. Applicable Plans, Policies, and Regulations F-4
IV. Rationale For Effluent Limitations and Discharge Specifications F-6
  A. Discharge Prohibitions F-6
  B. Conventional and Non-Conventional Pollutant Effluent Limitations F-7
  C. Toxic Pollutant Effluent Limitations F-7
  D. Effluent Limitation Considerations F-13
V. Rationale for Receiving Water Limitations F-13
VI. Rationale for Provisions F-13
  A. Standard Provisions F-13
  B. Monitoring and Reporting F-13
  C. Special Provisions F-14
VII. Rationale for Monitoring and reporting program (MRP) F-14
VIII. Public Participation F-15

Tables

Table F-1. Facility Information F-2
Table F-2. Historical Effluent Limitations and Monitoring Data F-4
Table F-3. Basin Plan Beneficial Uses F-5
Table F-4. Reasonable Potential Analysis F-9
Table F-5. Monitoring Requirements Summary F-14

ATTACHMENT F – FACT SHEET

This Fact Sheet includes the legal requirements and technical rationale that serve as the basis for the requirements of this Order. As described in section II.B of the Order, the Regional Water Board incorporates this Fact Sheet as its findings supporting the issuance of the Order.

I. PERMIT INFORMATION

The following table summarizes administrative information related to the facility.

Table F-1. Facility Information

WDID	2 011932001
CIWQS Place ID	211788
Discharger	Bottling Group, LLC
Facility Name	Bottling Group Hayward Plant
Facility Address	29000 Hesperian Boulevard Hayward, CA 94545
	Alameda County
Facility Contact, Title, Phone	Pranav Desai, Quality Control Manager, (510) 781-3688
Authorized Person to Sign and Submit Reports	Pedro Padilla, Plant Manager, (510) 781-3627
Mailing Address	29000 Hesperian Boulevard Hayward, CA 94545
Billing Address	Same as Mailing Address
Facility Type	Water and Soft Drink Bottling Plant
Major or Minor Facility	Minor
Threat to Water Quality	2
Complexity	B
Pretreatment Program	No
Reclamation Requirements	No
Permitted Flow	143,000 gallons per day (average monthly discharge rate)
Design Flow	900,000 gallons per day (current maximum design treatment capacity)
Watershed	Alameda Creek
Receiving Water	Old Alameda Creek
Receiving Water Type	Estuarine

A. Bottling Group, LLC (Discharger), is the owner and operator of the Bottling Group Hayward Plant (Plant) located at 29000 Hesperian Boulevard in Hayward. Attachment B provides maps of the area around the Plant.

For the purposes of this Order, references to the "discharger" or "permittee" in applicable federal and State laws, regulations, plans, or policy are held to be equivalent to references to the Discharger herein.

B. The Discharger is regulated pursuant to National Pollutant Discharge Elimination System (NPDES) Permit No. CA0030058. It was previously subject to Order No. R2-2008-0056 (previous order), which was adopted on July 9, 2008, and expired on August 31, 2013. The Plant discharges wastewater to the Alameda County Flood Control and Water Conservation Flood Channel, which is

the tidally-influenced lower portion of Old Alameda Creek. This is a water of the United States within the Alameda Creek and San Francisco Bay watersheds.

The Discharger must file a petition with the State Water Resources Control Board (State Water Board), Division of Water Rights, and receive approval for any change in the point of discharge, place of use, or purpose of use of treated wastewater that decreases the flow in any portion of a watercourse. The State Water Board retains the jurisdictional authority to enforce such requirements under Water Code section 1211.

C. The Discharger filed a Report of Waste Discharge and submitted an application for reissuance of its WDRs and NPDES permit on March 1, 2013.

II. FACILITY DESCRIPTION

A. Facility Description. The Plant manufactures, bottles, and distributes drinking water and soft drinks. It uses potable water supplied by the City of Hayward for this purpose. The supply water undergoes additional treatment in the manufacturing process. The Discharger's treatment system is capable of treating up to 900,000 gallons of supply water. The Discharger filters its supply water with anthracite and greensand filters to remove iron and manganese, then by 5-micrometer cartridge filters, and finally by reverse osmosis membranes. The Discharger adds chemical scale and fouling inhibitors to prevent fouling of the reverse osmosis membranes as well as a dechlorinating agent. This treatment process removes 99 percent of the dissolved solids and has an 80 percent recovery rate. This means that 80 percent of the filtered water is recovered and used in the Discharger's manufacturing processes, and 20 percent (which contains 99 percent of the dissolved solids) is discharged in the reverse osmosis concentrate stream. The process flow schematic is shown in Attachment C.

B. Discharge Description. The Discharger produces about 110,000 gallons per day (monthly average) of reverse osmosis concentrate. This permit allows up to 143,000 gallons per day (monthly average) to be discharged.

C. Discharge Points and Receiving Waters. The reverse osmosis concentrate stream is discharged to an onsite storm drain (Discharge Point No. 001). The storm drain flows offsite to the Alameda County Besco Pump Station. The pump station pumps the reverse osmosis concentrate stream and stormwater to the Alameda County Flood Control and Water Conservation District Flood Channel. The Alameda County Flood Control and Water Conservation District Flood Channel is the tidally-influenced downstream section of Old Alameda Creek, and it flows to Lower San Francisco Bay.

D. Summary of Existing Requirements and Monitoring Data. Effluent limitations contained in the previous order and representative monitoring data from the previous order term are presented below.

Table F-2. Historical Effluent Limitations and Monitoring Data

Parameter	Units	Effluent Limitations		Monitoring Data (9/08-4/13)
		Instantaneous Minimum	Instantaneous Maximum	Highest Daily Discharge
pH	standard units	6.5	8.5	6.7-8.4
Chlorine Residual	mg/L	0.0	---	0.0
Acute Toxicity	percent survival	70 [1]		85-100

Unit Abbreviation:

mg/L = milligrams per liter

Footnote:

[1] The acute toxicity limitations were a three-sample median of not less than 90 percent survival and a single-sample value of not less than 70 percent survival.

E. Compliance Summary. The Discharger did not violate the previous order.

F. Planned Changes. The Discharger has no changes planned for this permit term.

III. APPLICABLE PLANS, POLICIES, AND REGULATIONS

The requirements in this Order are based on the requirements and authorities described below:

A. Legal Authorities. This Order serves as WDRs pursuant to California Water Code article 4, chapter 4, division 7 (commencing with § 13260). This Order is also issued pursuant to Clean Water Act (CWA) section 402 and implementing regulations adopted by U.S. EPA, and Water Code chapter 5.5, division 7 (commencing with § 13370). It shall serve as an NPDES permit for point source discharges from this facility to surface waters.

B. California Environmental Quality Act. Under Water Code section 13389, this action to adopt an NPDES permit is exempt from the provisions of the California Environmental Quality Act, Public Resources Code division 13, chapter 3 (commencing with § 21100).

C. State and Federal Regulations, Policies, and Plans

1. **Water Quality Control Plan.** The Regional Water Board adopted the *Water Quality Control Plan for the San Francisco Bay Basin* (Basin Plan), which designates beneficial uses, establishes water quality objectives, and contains implementation programs and policies to achieve those objectives for all waters addressed through the plan. Requirements in this Order implement the Basin Plan. In addition, this Order implements State Water Board Resolution No. 88-63, which established state policy that all waters, with certain exceptions, should be considered suitable or potentially suitable for municipal or domestic supply. Because of the marine influence on Old Alameda Creek, total dissolved solids levels exceed 3,000 mg/L; therefore, Old Alameda Creek meets an exception to State Water Board Resolution No. 88-63. Beneficial uses applicable to Old Alameda Creek are as follows.

Table F-3. Basin Plan Beneficial Uses

Discharge Point	Receiving Water	Beneficial Uses
001	Old Alameda Creek	Estuarine Habitat (EST) Wildlife Habitat (WILD) Water Contact Recreation (REC1) Non-Contact Water Recreation (REC2)

2. **Sediment Quality.** The State Water Board adopted the *Water Quality Control Plan for Enclosed Bays and Estuaries – Part 1, Sediment Quality* on September 16, 2008, and it became effective on August 25, 2009. This plan supersedes other narrative sediment quality objectives, and establishes new sediment quality objectives and related implementation provisions for specifically defined sediments in most bays and estuaries. This Order implements the sediment quality objectives of this plan.

3. **National Toxics Rule (NTR) and California Toxics Rule (CTR).** U.S. EPA adopted the NTR on December 22, 1992, and amended it on May 4, 1995, and November 9, 1999. About 40 criteria in the NTR apply in California. On May 18, 2000, U.S. EPA adopted the CTR. The CTR promulgated new toxics criteria for California and incorporated the previously adopted NTR criteria that applied in the State. U.S. EPA amended the CTR on February 13, 2001. These rules contain water quality criteria for priority pollutants.

4. **State Implementation Policy.** On March 2, 2000, the State Water Board adopted the *Policy for Implementation of Toxics Standards for Inland Surface Waters, Enclosed Bays, and Estuaries of California* (State Implementation Policy or SIP). The SIP became effective on April 28, 2000, with respect to the priority pollutant criteria U.S. EPA promulgated for California through the NTR and the priority pollutant objectives the Regional Water Board established in the Basin Plan. The SIP became effective on May 18, 2000, with respect to the priority pollutant criteria U.S. EPA promulgated through the CTR. The State Water Board adopted amendments to the SIP on February 24, 2005, that became effective on July 13, 2005. The SIP establishes implementation provisions for priority pollutant criteria and objectives, and provisions for chronic toxicity control. Requirements of this Order implement the SIP.

5. **Antidegradation Policy.** Federal regulations at 40 C.F.R. section 131.12 requires that state water quality standards include an antidegradation policy consistent with the federal policy. The State Water Board established California's antidegradation policy through State Water Board Resolution 68-16, which is deemed to incorporate the federal antidegradation policy where the federal policy applies under federal law. Resolution 68-16 requires that existing water quality be maintained unless degradation is justified based on specific findings. The Basin Plan implements, and incorporates by reference, both the State and federal antidegradation policies. Permitted discharges must be consistent with the antidegradation provisions of 40 C.F.R. section 131.12 and State Water Board Resolution 68-16.

6. **Anti-Backsliding Requirements.** CWA sections 402(o) and 303(d)(4) and 40 C.F.R. section 122.44(l) restrict backsliding in NPDES permits. These anti-backsliding provisions require that effluent limitations in a reissued permit be as stringent as those in the previous permit, with some exceptions in which limitations may be relaxed.

7. **Endangered Species Act Requirements.** This Order does not authorize any act that results in the taking of a threatened or endangered species or any act that is now prohibited, or becomes prohibited in the future, under either the California Endangered Species Act (Fish and Game Code §§ 2050 to 2097) or the Federal Endangered Species Act (16 U.S.C.A. §§ 1531 to 1544). This Order requires compliance with effluent limits, receiving water limits, and other requirements to protect the beneficial uses of waters of the State, including protecting rare, threatened, or endangered species. The Discharger is responsible for meeting all applicable Endangered Species Act requirements.

D. Impaired Waters on CWA 303(d) List

In October 2011, U.S. EPA approved a revised list of impaired waters prepared pursuant to CWA section 303(d), which requires identification of specific water bodies where it is expected that water quality standards will not be met after implementation of technology-based effluent limitations on point sources. Where it has not done so already, the Regional Water Board plans to adopt Total Maximum Daily Loads (TMDLs) for pollutants on the 303(d) list. TMDLs establish wasteload allocations for point sources and load allocations for non-point sources, and are established to achieve the water quality standards for the impaired waters.

Lower San Francisco Bay is listed as an impaired water. The pollutants impairing Lower San Francisco Bay are chlordane, DDT, dieldrin, exotic species, dioxins and furans, mercury, trash, and dioxin-like PCBs and PCBs. On February 12, 2008, U.S. EPA approved a TMDL for mercury in San Francisco Bay. On March 29, 2010, U.S. EPA approved a TMDL for PCBs in San Francisco Bay. Old Alameda Creek is not impaired for mercury or PCBs. PCBs have not been detected is this discharge.

IV. RATIONALE FOR EFFLUENT LIMITATIONS AND DISCHARGE SPECIFICATIONS

The CWA requires point source dischargers to control the amount of conventional, non-conventional, and toxic pollutants discharged into waters of the United States. The control of pollutants discharged is established through effluent limitations and other requirements in NPDES permits. There are two principal bases for effluent limitations: 40 C.F.R. section 122.44(a) requires that permits include applicable technology-based limitations and standards; and 40 C.F.R. section 122.44(d) requires that permits include water quality-based effluent limitations to attain and maintain applicable numeric and narrative water quality criteria to protect the beneficial uses of receiving waters.

A. Discharge Prohibitions

1. Prohibitions in this Order

a. **Discharge Prohibition III.A (No discharge other than as described in this Order):** This prohibition is based on 40 C.F.R. section 122.21(a) and Water Code section 13260, which require filing an application and Report of Waste Discharge before a discharge can occur. Discharges not described in the application and Report of Waste Discharge, and subsequently in this Order, are prohibited.

b. **Discharge Prohibition III.B (No discharge greater than a monthly average flow of 143,000 gallons per day):** This prohibition is based on the capacity of the Discharger's treatment system.

2. **Exception to Shallow Water Discharge Prohibition.** Basin Plan Table 4-1, Discharge Prohibition 1, prohibits discharges not receiving a minimum of 10:1 initial dilution. It is intended to protect beneficial uses in areas that receive limited to no dilution. In this case, Old Alameda Creek is tidally-influenced and receives flushing from tidal action. Discharge Prohibition 1 is also intended to provide a buffer against the effects of abnormal discharges caused by temporary plant upsets or malfunctions. The dilution requirement is to provide a contingency in the event of temporary treatment malfunction and to minimize public contact with undiluted waste. However, if a Plant upset were to occur, the reverse osmosis concentrate discharge would be less concentrated and have less water quality impact.

B. Conventional and Non-Conventional Pollutant Effluent Limitations

1. **pH.** The pH effluent limitations are based on Basin Plan Table 4-2.

2. **Total Residual Chlorine.** The total residual chlorine effluent limitation is based on Basin Plan Table 4-2. The allowance for determining false positives when using continuous devices is based on the fact that continuous instruments occasionally have anomalous spikes.

C. Toxic Pollutant Effluent Limitations

1. **Scope and Authority.** For toxic pollutants, CWA section 301(b) and 40 C.F.R. section 122.44(d) require that permits include Water Quality Based Effluent Limitations (WQBELs) more stringent than federal technology-based requirements where necessary to achieve applicable water quality standards. According to 40 C.F.R. section 122.44(d)(1)(i), permits must include effluent limitations for all pollutants that are or may be discharged at levels that have a reasonable potential to cause or contribute to an exceedance of a water quality standard, including numeric and narrative objectives within a standard. This Order does not contain WQBELs because reasonable potential was not triggered for any toxic pollutants as described in section IV.C.3 below.

2. **Beneficial Uses and Water Quality Criteria and Objectives.** Discharge Point No. 001 discharges to Old Alameda Creek. Section III.C.1, above, identifies the beneficial uses of Old Alameda Creek. Water quality criteria and objectives to protect these beneficial uses are described below:

   a. **Basin Plan Objectives.** The Basin Plan specifies numeric water quality objectives for 10 priority pollutants and various narrative water quality objectives.

   b. **CTR Criteria.** The CTR specifies numeric aquatic life and human health criteria for numerous priority pollutants. These criteria apply to inland surface waters and enclosed bays and estuaries. Some human health criteria are for consumption of "water and organisms" and others are for consumption of "organisms only." The criteria applicable to "organisms only" apply to Old Alameda Creek because it is not a source of drinking water.

c. **NTR Criteria.** The NTR establishes numeric aquatic life and human health criteria for a number of toxic pollutants for San Francisco Bay waters upstream to and including Suisun Bay and the Sacramento-San Joaquin Delta. The NTR criteria apply to Old Alameda Creek.

d. **Sediment Quality Objectives.** The *Water Quality Control Plan for Enclosed Bays and Estuaries – Part 1, Sediment Quality* contains a narrative water quality objective: "Pollutants in sediments shall not be present in quantities that, alone or in combination, are toxic to benthic communities in bays and estuaries of California." This objective is to be implemented by integrating three lines of evidence: sediment toxicity, benthic community condition, and sediment chemistry. The policy requires that if the Regional Water Board determines that a discharge has reasonable potential to cause or contribute to an exceedance of this objective, it is to impose the objective as a receiving water limit.

e. **Receiving Water Salinity.** Basin Plan section 4.6.2 (like the CTR and NTR) states that the salinity characteristics (i.e., freshwater vs. saltwater) of the receiving water are to be considered in determining the applicable water quality objectives. Freshwater criteria apply to discharges to waters with salinities equal to or less than one part per thousand (ppt) at least 95 percent of the time. Saltwater criteria apply to discharges to waters with salinities equal to or greater than 10 ppt at least 95 percent of the time in a normal water year. For discharges to waters with salinities between these two categories, or tidally-influenced freshwaters that support estuarine beneficial uses, the water quality objectives are the lower of the salt or freshwater objectives (the latter calculated based on ambient hardness) for each substance.

   Old Alameda Creek is an estuarine water environment based on salinity data collected by the Discharger between October 2008 and April 2013. Of the 38 Old Alameda Creek samples collected, 26 (68 percent) were less than 2 ppt, 10 (26 percent) were between 2 ppt and 10 ppt, and 2 (5 percent) were greater than 10 ppt. Therefore, Old Alameda Creek is classified as estuarine, and the reasonable potential analysis was based on the more stringent of freshwater and saltwater water quality criteria and objectives.

f. **Site-Specific Metals Translators.** Effluent limitations for metals must be expressed as total recoverable metal (40 C.F.R. § 122.45[c]). Since the water quality objectives for metals are typically expressed as dissolved metal, translators must be used to convert metals concentrations from dissolved to total recoverable and vice versa. The CTR contains default translators; however, site-specific conditions, such as water temperature, pH, suspended solids, and organic carbon may affect the form of metal (dissolved, non-filterable, or otherwise) present and therefore available to cause toxicity. In general, dissolved metals are more available and more toxic to aquatic life than other forms. Site-specific translators can account for site-specific conditions, thereby preventing overly stringent or under-protective water quality objectives. For copper, Basin Plan Table 7.2.1-2 contains site-specific translators for deep water discharges to Lower San Francisco Bay: 0.73 and 0.87 (monthly and daily). For nickel, this Order uses site-specific translators the Clean Estuary Partnership developed, as set forth in *North of Dumbarton Bridge Copper and Nickel Development and Selection of Final Translators* report (March 2005): 0.65 and 0.85 (monthly and daily).

3. **Need for Water Quality-Based Effluent Limitations (Reasonable Potential Analysis).** Assessing whether a pollutant has reasonable potential to exceed a water quality objective is the fundamental step in determining whether a WQBEL is required.

   a. **Methodology.** SIP section 1.3 sets forth the methodology used for this Order for assessing whether a pollutant has reasonable potential to exceed a water quality objective. The analysis begins with identifying the maximum effluent concentration (MEC) observed for each pollutant based on available effluent concentration data and the ambient background concentration (B). SIP section 1.4.3 states that ambient background concentrations are either the maximum ambient concentration observed or, for water quality objectives intended to protect human health, the arithmetic mean of observed concentrations.There are three triggers in determining reasonable potential:

      i. **Trigger 1** is activated if the maximum effluent concentration is greater than or equal to the lowest applicable water quality objective (MEC $\geq$ water quality objective).

      ii. **Trigger 2** is activated if the ambient background concentration observed in the receiving water is greater than the water quality objective (B > water quality objective) *and* the pollutant is detected in any effluent sample.

      iii. **Trigger 3** is activated if a review of other information indicates that a WQBEL is needed to protect beneficial uses.

   b. **Effluent Data.** The reasonable potential analysis for this Order is based on effluent monitoring data the Discharger collected in October 2012.

   c. **Ambient Background Data.** The reasonable potential analysis for this Order is based on receiving water monitoring data the Discharger collected in October 2012.

   d. **Reasonable Potential Analysis for Toxic Pollutants.** The maximum effluent concentrations, most stringent applicable water quality criteria and objectives, and ambient background concentrations used in the analysis are presented in the following table, along with the reasonable potential analysis results (yes or no) for each pollutant. Reasonable potential was not determined for all pollutants because there are not water quality objectives for all pollutants, and monitoring data are unavailable for others. No pollutants exhibited reasonable potential.

Table F-4. Reasonable Potential Analysis

CTR #	Priority Pollutants	Governing criterion or objective (µg/L)	MEC or Minimum DL [1][2] (µg/L)	Background or Minimum DL [1][2] (µg/L)	Results [3]
1	Antimony	4,300	< 0.5	< 0.5	No
2	Arsenic	36	3.5	3.0	No
3	Beryllium	No Criteria	< 0.50	< 0.50	Ud
4	Cadmium	9.4	< 0.50	< 0.50	No
5a	Chromium (III)	No Criteria	< 1.0	2.3	No
5b	Chromium (VI)	50	< 10	< 10	No
6	Copper	3.4	< 0.5	3.8	No
7	Lead	8.5	< 0.5	3.3	No
8	Mercury (303(d) listed)	0.025	0.0012	0.0033	No
9	Nickel	13	< 1.0	4.0	No

CTR #	Priority Pollutants	Governing criterion or objective (µg/L)	MEC or Minimum DL [1][2] (µg/L)	Background or Minimum DL [1][2] (µg/L)	Results [3]
10	Selenium (303(d) listed)	5	< 2.0	3.3	No
11	Silver	2.2	<0.25	<0.25	No
12	Thallium	6.3	< 1.0	< 1.0	No
13	Zinc	86	< 1.0	< 1.0	No
14	Cyanide	2.9	2.1	< 1.0	No
15	Asbestos	No Criteria	Unavailable	Unavailable	Ud
16	2,3,7,8-TCDD (303(d) listed)	1.40×10^{-8}	$< 3.3 \times 10^{-7}$	$< 3.3 \times 10^{-7}$	No
17	Acrolein	780	< 5.0	< 5.0	No
18	Acrylonitrile	0.66	< 2.0	< 2.0	Ud
19	Benzene	71	< 2.0	< 2.0	No
20	Bromoform	360	< 2.0	< 2.0	No
21	Carbon Tetrachloride	4.4	< 2.0	< 2.0	No
22	Chlorobenzene	21,000	< 2.0	< 2.0	No
23	Chlorodibromomethane	34	< 2.0	< 2.0	No
24	Chloroethane	No Criteria	< 2.0	< 2.0	Ud
25	2-Chloroethylvinyl ether	No Criteria	< 1.0	< 1.0	Ud
26	Chloroform	No Criteria	150	<0.5	Ud
27	Dichlorobromomethane	46	5.3	<0.5	No
28	1,1-Dichloroethane	No Criteria	< 1.0	< 1.0	Ud
29	1,2-Dichloroethane	99	< 2.0	< 2.0	No
30	1,1-Dichloroethylene	3.2	< 2.0	< 2.0	No
31	1,2-Dichloropropane	39	< 2.0	< 2.0	No
32	1,3-Dichloropropylene	1,700	< 2.0	< 2.0	No
33	Ethylbenzene	29,000	< 2.0	< 2.0	No
34	Methyl Bromide	4,000	< 2.0	< 2.0	No
35	Methyl Chloride	No Criteria	< 2.0	< 2.0	Ud
36	Methylene Chloride	1,600	< 2.0	< 2.0	No
37	1,1,2,2-Tetrachloroethane	11	< 1.0	< 1.0	No
38	Tetrachloroethylene	8.9	< 2.0	< 2.0	No
39	Toluene	200,000	< 2.0	< 2.0	No
40	1,2-Trans-Dichloroethylene	140,000	< 1.0	< 1.0	No
41	1,1,1-Trichloroethane	No Criteria	< 2.0	< 2.0	Ud
42	1,1,2-Trichloroethane	42	< 2.0	< 2.0	No
43	Trichloroethylene	81	< 2.0	< 2.0	No
44	Vinyl Chloride	525	< 2.0	< 2.0	No
45	2-Chlorophenol	400	< 5.0	< 5.0	No
46	2,4-Dichlorophenol	790	< 5.0	< 5.0	No
47	2,4-Dimethylphenol	2,300	< 2.0	< 2.0	No
48	2-Methyl- 4,6-Dinitrophenol	765	< 5.0	< 5.0	No
49	2,4-Dinitrophenol	14,000	< 5.0	< 5.0	No
50	2-Nitrophenol	No Criteria	< 10	< 10	Ud
51	4-Nitrophenol	No Criteria	< 10	< 10	Ud
52	3-Methyl 4-Chlorophenol	No Criteria	< 1.0	< 1.0	Ud
53	Pentachlorophenol	7.9	< 5.0	< 5.0	No
54	Phenol	4,600,000	< 0.30	< 0.30	No
55	2,4,6-Trichlorophenol	6.5	< 10	< 10	Ud
56	Acenaphthene	2,700	< 0.50	< 0.50	No
57	Acenaphthylene	No Criteria	< 0.20	< 0.20	Ud
58	Anthracene	110,000	< 2.0	< 2.0	No
59	Benzidine	0.00054	< 5.0	< 5.0	No
60	Benzo(a)Anthracene	0.049	< 5.0	< 5.0	Ud
61	Benzo(a)Pyrene	0.049	< 2.0	< 2.0	Ud
62	Benzo(b)Fluoranthene	0.049	< 10	< 10	Ud

CTR #	Priority Pollutants	Governing criterion or objective (µg/L)	MEC or Minimum DL [1][2] (µg/L)	Background or Minimum DL [1][2] (µg/L)	Results [3]
63	Benzo(ghi)Perylene	No Criteria	< 0.10	< 0.10	Ud
64	Benzo(k)Fluoranthene	0.049	< 2.0	< 2.0	Ud
65	Bis(2-Chloroethoxy)Methane	No Criteria	< 5.0	< 5.0	Ud
66	Bis(2-Chloroethyl)Ether	1.4	< 1.0	< 1.0	No
67	Bis(2-Chloroisopropyl)Ether	170,000	< 2.0	< 2.0	No
68	Bis(2-Ethylhexyl)Phthalate	5.9	< 5.0	< 5.0	No
69	4-Bromophenyl Phenyl Ether	No Criteria	< 5.0	< 5.0	Ud
70	Butylbenzyl Phthalate	5,200	< 10	< 10	No
71	2-Chloronaphthalene	4,300	< 10	< 10	No
72	4-Chlorophenyl Phenyl Ether	No Criteria	< 5.0	< 5.0	Ud
73	Chrysene	0.049	< 10	< 10	Ud
74	Dibenzo(a,h)Anthracene	0.049	< 0.10	< 0.10	Ud
75	1,2-Dichlorobenzene	17,000	< 2.0	< 2.0	No
76	1,3-Dichlorobenzene	2,600	< 2.0	< 2.0	No
77	1,4-Dichlorobenzene	2,600	< 2.0	< 2.0	No
78	3,3 Dichlorobenzidine	0.077	< 5.0	< 5.0	Ud
79	Diethyl Phthalate	120,000	< 2.0	< 2.0	No
80	Dimethyl Phthalate	2,900,000	< 2.0	< 2.0	No
81	Di-n-Butyl Phthalate	12,000	< 10	< 10	No
82	2,4-Dinitrotoluene	9.1	< 5.0	< 5.0	No
83	2,6-Dinitrotoluene	No Criteria	< 5.0	< 5.0	Ud
84	Di-n-Octyl Phthalate	No Criteria	< 10	< 10	Ud
85	1,2-Diphenylhydrazine	0.54	< 1.0	< 1.0	Ud
86	Fluoranthene	370	< 0.050	< 0.050	No
87	Fluorene	14,000	< 0.10	< 0.10	No
88	Hexachlorobenzene	0.00077	< 1.0	< 1.0	Ud
89	Hexachlorobutadiene	50	< 1.0	< 1.0	No
90	Hexachlorocyclopentadiene	17,000	< 5.0	< 5.0	No
91	Hexachloroethane	8.9	< 1.0	< 1.0	No
92	Indeno(1,2,3-cd)Pyrene	0.049	< 0.050	< 0.050	Ud
93	Isophorone	600	< 1.0	< 1.0	No
94	Naphthalene	No Criteria	< 1.0	< 1.0	Ud
95	Nitrobenzene	1,900	< 1.0	< 1.0	No
96	N-Nitrosodimethylamine	8.1	< 5.0	< 5.0	No
97	N-Nitrosodi-n-Propylamine	1.4	< 5.0	< 5.0	Ud
98	N-Nitrosodiphenylamine	16	< 1.0	< 1.0	No
99	Phenanthrene	No Criteria	< 5.0	< 5.0	Ud
100	Pyrene	11,000	< 0.050	< 0.050	No
101	1,2,4-Trichlorobenzene	No Criteria	< 5.0	< 5.0	Ud
102	Aldrin	0.00014	< 0.0050	< 0.0050	Ud
103	Alpha-BHC	0.013	< 0.010	< 0.010	No
104	Beta-BHC	0.046	< 0.0050	< 0.0050	No
105	Gamma-BHC	0.063	< 0.020	< 0.020	No
106	Delta-BHC	No Criteria	< 0.0050	< 0.0050	Ud
107	Chlordane (303(d) listed)	0.00059	< 0.10	< 0.10	Ud
108	4,4'-DDT (303(d) listed)	0.00059	< 0.010	< 0.010	Ud
109	4,4'-DDE (linked to DDT)	0.00059	< 0.050	< 0.050	Ud
110	4,4'-DDD	0.00084	< 0.050	< 0.050	Ud
111	Dieldrin (303d listed)	0.00014	< 0.010	< 0.010	Ud
112	Alpha-Endosulfan	0.0087	< 0.020	< 0.020	Ud
113	beta-Endosulfan	0.0087	< 0.010	< 0.010	Ud
114	Endosulfan Sulfate	240	< 0.050	< 0.050	No
115	Endrin	0.0023	< 0.010	< 0.010	Ud

CTR #	Priority Pollutants	Governing criterion or objective (µg/L)	MEC or Minimum DL [1][2] (µg/L)	Background or Minimum DL [1][2] (µg/L)	Results [3]
116	Endrin Aldehyde	0.81	< 0.010	< 0.010	No
117	Heptachlor	0.00021	< 0.010	< 0.010	Ud
118	Heptachlor Epoxide	0.00011	< 0.010	< 0.010	Ud
119-125	PCBs sum (303(d) listed)	0.00017	< 0.50	< 0.50	Ud
126	Toxaphene	0.0002	< 0.50	< 0.50	Ud

Footnotes:

[1] The maximum effluent concentration and ambient background concentration are the actual detected concentrations unless preceded by a "<" sign, in which case the value shown is the minimum detection level (DL).

[2] The maximum effluent concentration or ambient background concentration is "Unavailable" when there are no monitoring data for the constituent.

[3] RPA Results = Yes, if MEC ≥ WQC, B > WQC and MEC is detected, or Trigger 3
= No, if MEC and B are < WQC or all effluent data are undetected
= Undetermined (Ud), if no criteria have been promulgated or data are insufficient.

e. **Reasonable Potential Analysis for Sediment Quality.** Pollutants in some receiving water sediments may be present in quantities that alone or in combination are toxic to benthic communities. Efforts are underway to identify stressors causing such conditions. However, to date there is no evidence directly linking compromised sediment conditions to the discharges subject to this Order; therefore, the Regional Water Board cannot draw a conclusion about reasonable potential for these discharges to cause or contribute to exceedances of the sediment quality objectives. The Regional Monitoring Program monitors San Francisco Bay sediment and seeks to identify stressors responsible for degraded sediment quality. Thus far, the monitoring has provided only limited information about potential stressors and sediment transport. The Regional Water Board is exploring options for obtaining additional information that may inform future analyses.

f. **Constituents with limited data.** In some cases, reasonable potential cannot be determined because effluent data are limited or ambient background concentrations are unavailable. Provision VI.C.2 of the Order requires the Discharger to continue monitoring for these constituents in its effluent using analytical methods that provide the best feasible detection limits. When additional data become available, further analysis will be conducted to determine whether numeric effluent limitations are necessary.

g. **Pollutants with No Reasonable Potential.** This Order does not contain WQBELs for constituents that do not demonstrate reasonable potential; however, Provision VI.C.2 of the Order still requires monitoring for those pollutants. If concentrations are found to have increased significantly, Provision VI.C.2 of the Order requires the Discharger to investigate the sources of the increases and implement remedial measures if the increases pose a threat to receiving water quality.

4. **Whole Effluent Acute Toxicity.** This Order includes effluent limitations for whole effluent acute toxicity based on Basin Plan Table 4-3. All bioassays are to be performed according to the U.S. EPA approved method in 40 C.F.R. section 136, currently *Methods for Measuring the Acute Toxicity of Effluents and Receiving Waters to Freshwater and Marine Organisms*, 5th Edition (EPA-821-R-02-012). The currently approved test species specified in the MRP is the fathead minnow (*Pimephales promelas*).

D. Effluent Limitation Considerations

1. **Anti-backsliding.** This Order complies with the anti-backsliding provisions of CWA sections 402(o) and 303(d)(4) and 40 C.F.R. section 122.44(l), which generally require effluent limitations in a reissued permit to be as stringent as those in the previous permit. All requirements of this Order are at least as stringent as those in the previous order.
2. **Antidegradation.** This Order complies with the antidegradation provisions of 40 C.F.R. section 131.12 and State Water Board Resolution No. 68-16. It continues the status quo with respect to the level of discharge authorized in the previous order, which is the baseline by which to measure whether degradation will occur. This Order does not allow for a reduced level of treatment or increase effluent limitations relative to those in the previous order.
3. **Stringency of Requirements for Individual Pollutants.** This Order contains technology-based requirements that implement minimum applicable federal technology-based requirements.

V. RATIONALE FOR RECEIVING WATER LIMITATIONS

The receiving water limitations are based on Basin Plan narrative and numeric water quality objectives.

VI. RATIONALE FOR PROVISIONS

A. Standard Provisions

Attachment D contains standard provisions that apply to all NPDES permits in accordance with 40 C.F.R. section 122.41 and additional conditions applicable to specific categories of permits in accordance with 40 C.F.R. section 122.42. The Discharger must comply with these provisions. The conditions set forth in 40 C.F.R. sections 122.41(a)(1) and (b) through (n) apply to all state-issued NPDES permits and must be incorporated into the permits either expressly or by reference.

In accordance with 40 C.F.R. section 123.25(a)(12), states may omit or modify conditions to impose more stringent requirements. Attachment G contains standard provisions that supplement the federal standard provisions in Attachment D.

This Order omits federal conditions that address enforcement authority specified in 40 C.F.R. sections 122.41(j)(5) and (k)(2) because the State's enforcement authority under the Water Code is more stringent. In lieu of these conditions, this Order incorporates Water Code section 13387(e) by reference.

B. Monitoring and Reporting

Pursuant to 40 C.F.R. section 122.48, NPDES permits must specify requirements for recording and reporting monitoring results. Water Code sections 13267 and 13383, and 40 C.F.R. sections 122.41(h) and (j), authorize the Regional Water Board to require technical and monitoring reports. This Order establishes monitoring and reporting requirements, contained in the Monitoring and Reporting Program (Attachment E), that implement federal and State

requirements. For more background regarding these requirements, see section VII of this Fact Sheet.

C. Special Provisions

1. **Reopener Provisions.** These provisions are based on 40 C.F.R. sections 122.62 and 122.63 and allow modification of this Order and its effluent limitations as necessary in response to updated water quality objectives, regulations, or other new and relevant information that may become available in the future, and other circumstances as allowed by law.

2. **Effluent Characterization Study and Report.** This Order does not include effluent limitations for priority pollutants that do not demonstrate reasonable potential, but this provision requires the Discharger to continue monitoring for these pollutants as described in the MRP and Attachment G. This requirement is authorized pursuant to CWC section 13267, is necessary to inform the next permit reissuance, and ensures that the Discharger takes timely steps in response to any unanticipated change in effluent quality during the term of this Order.

VII. RATIONALE FOR MONITORING AND REPORTING PROGRAM (MRP)

Attachment E contains the MRP for this Order. It specifies sampling stations, pollutants to be monitored (including all parameters for which effluent limitations are specified), monitoring frequencies, and reporting requirements. The following provides the rationale for the MRP requirements:

A. MRP Requirements Rationale

1. **Effluent Monitoring.** Effluent flow monitoring is necessary to evaluate compliance with Prohibition III.B (average monthly flow). Residual chlorine and pH monitoring are necessary to evaluate compliance with effluent limitations.

2. **Whole Effluent Toxicity Testing**. Whole effluent acute toxicity tests are necessary to evaluate compliance with effluent limitations.

3. **Receiving Water Monitoring.** Receiving water monitoring for dissolved oxygen, sulfide, pH, and standard observations is necessary to evaluate compliance with receiving water limitations. Receiving water monitoring for salinity is necessary to determine the water quality objectives for the next reasonable potential analysis.

B. Monitoring Requirements Summary. The table below summarizes routine monitoring requirements. This table is for informational purposes only. The actual requirements are specified in the MRP and elsewhere in this Order.

Table F-5. Monitoring Requirements Summary

Parameter	Effluent EFF-001	Effluent EFF-001A	Receiving Water REC-001	Receiving Water REC-002
Flow	Continuous			
pH	1/Week		1/Quarter	1/Quarter
Chlorine Residual [1]	1/Month	1/Month		
Acute Toxicity	1/Year			

Parameter	Effluent EFF-001	Effluent EFF-001A	Receiving Water REC-001	Receiving Water REC-002
Dissolved Oxygen			1/Quarter	1/Quarter
Sulfides			1/Quarter	1/Quarter
Salinity			1/Quarter	1/Quarter
Standard Observations			1/Quarter	1/Quarter
All other priority pollutants	1/5 Years		1/5 Years	

Footnotes:

[1] Chlorine residual samples may be collected at either EFF-001 or EFF-001A.

VIII. PUBLIC PARTICIPATION

The Regional Water Board considered the issuance of WDRs that will serve as an NPDES permit for the Plant. As a step in the WDR adoption process, Regional Water Board staff developed tentative WDRs and encouraged public participation in the WDR adoption process.

A. Notification of Interested Parties. The Regional Water Board notified the Discharger and interested agencies and persons of its intent to prescribe WDRs for the discharge and provided an opportunity to submit written comments and recommendations. Notification was provided through the *Hayward Daily Review*. The public had access to the agenda and any changes in dates and locations through the Regional Water Board's website at http://www.waterboards.ca.gov/sanfranciscobay.

B. Written Comments. Interested persons were invited to submit written comments concerning the tentative WDRs as explained through the notification process. Comments were due either in person or by mail at the Regional Water Board office at 1515 Clay Street, Suite 1400, Oakland, California 94612, to the attention of Vincent Christian.

For full staff response and Regional Water Board consideration, the written comments were due at the Regional Water Board office by 5:00 p.m. on July 17, 2013.

C. Public Hearing. The Regional Water Board held a public hearing on the tentative WDRs during its regular meeting at the following date and time, and at the following location:

Date: Wednesday, September 11, 2013
Time: 9:00 a.m.
Location: Elihu Harris State Office Building
1515 Clay Street, 1st Floor Auditorium
Oakland, CA 94612

Contact: Vincent Christian, (510) 622-2336, vchristian@waterboards.ca.gov

Interested persons were invited to attend. At the public hearing, the Regional Water Board heard testimony pertinent to the discharge, WDRs, and permit. For accuracy of the record, important testimony wasrequested to be in writing.

Dates and venues change. The Regional Water Board web address is http://www.waterboards.ca.gov/sanfranciscobay, where one could access the current agenda for changes in dates and locations.

D. Reconsideration of Waste Discharge Requirements. Any aggrieved person may petition the State Water Board to review the Regional Water Board decision regarding the final WDRs. The State Water Board must receive the petition at the following address within 30 calendar days of the Regional Water Board action:

State Water Resources Control Board
Office of Chief Counsel
P.O. Box 100, 1001 I Street
Sacramento, CA 95812-0100

For instructions on how to file a petition for review, see http://www.waterboards.ca.gov/public_notices/petitions/water_quality/wqpetition_instr.shtml.

E. Information and Copying. The Report of Waste Discharge, related supporting documents, and comments received are on file and may be inspected at the address above at any time between 9:00 a.m. and 5:00 p.m., Monday through Friday. Copying of documents may be arranged by calling (510) 622-2300.

F. Register of Interested Persons. Any person interested in being placed on the mailing list for information regarding the WDRs and NPDES permit should contact the Regional Water Board, reference the Facility, and provide a name, address, and phone number.

G. Additional Information. Requests for additional information or questions regarding this Order should be directed to Vincent Christian at (510) 622-2336 or vchristian@waterboards.ca.gov.

CALIFORNIA REGIONAL WATER QUALITY CONTROL BOARD
SAN FRANCISCO BAY REGION

ATTACHMENT G

REGIONAL STANDARD PROVISIONS, AND MONITORING
AND REPORTING REQUIREMENTS
(SUPPLEMENT TO ATTACHMENT D)

For

NPDES WASTEWATER DISCHARGE PERMITS

March 2010

Contents

I. STANDARD PROVISIONS - PERMIT COMPLIANCE G-1
A. Duty to Comply G-1
B. Need to Halt or Reduce Activity Not a Defense G-1
C. Duty to Mitigate G-1
1. Contingency Plan G-1
2. Spill Prevention Plan G-2
D. Proper Operation & Maintenance G-2
1. Operation and Maintenance (O&M) Manual G-2
2. Wastewater Facilities Status Report G-2
3. Proper Supervision and Operation of Publicly Owned Treatment Works (POTWs) G-3
E. Property Rights G-3
F. Inspection and Entry G-3
G. Bypass G-3
H. Upset G-3
I. Other G-3
J. Storm Water G-3
1. Storm Water Pollution Prevention Plan (SWPP Plan) G-3
2. Source Identification G-4
3. Storm Water Management Controls G-5
4. Annual Verification of SWPP Plan G-6
K. Biosolids Management G-6
II. STANDARD PROVISIONS – PERMIT ACTION G-7
III. STANDARD PROVISIONS – MONITORING G-7
A. Sampling and Analyses G-7
1. Use of Certified Laboratories G-7
2. Use of Appropriate Minimum Levels G-7
3. Frequency of Monitoring G-7
B. Biosolids Monitoring G-10
1. Biosolids Monitoring Frequency G-10
2. Biosolids Pollutants to Monitor G-10
C. Standard Observations G-10
1. Receiving Water Observations G-10
2. Wastewater Effluent Observations G-11
3. Beach and Shoreline Observations G-11
4. Land Retention or Disposal Area Observations G-11
5. Periphery of Waste Treatment and/or Disposal Facilities Observations G-12
IV. STANDARD PROVISIONS – RECORDS G-12
A. Records to be Maintained G-12
B. Records of monitoring information G-12
1. Analytical Information G-12
2. Flow Monitoring Data G-12
3. Wastewater Treatment Process Solids G-13
4. Disinfection Process G-13
5. Treatment Process Bypasses G-13
6. Treatment Facility Overflows G-14
C. Claims of Confidentiality G-14
V. STANDARD PROVISIONS – REPORTING G-14

A. Duty to Provide Information G-14
B. Signatory and Certification Requirements G-14
C. Monitoring Reports G-14
1. Self Monitoring Reports G-14
D. Compliance Schedules G-18
E. Twenty-Four Hour Reporting G-18
1. Spill of Oil or Other Hazardous Material Reports G-18
2. Unauthorized Discharges from Municipal Wastewater Treatment Plants G-19
F. Planned Changes G-22
G. Anticipated Noncompliance G-22
H. Other Noncompliance G-22
I. Other Information G-22
VI. STANDARD PROVISION – ENFORCEMENT G-22
VII. ADDITIONAL PROVISIONS – NOTIFICATION LEVELS G-22
VIII. DEFINITIONS G-22

CALIFORNIA REGIONAL WATER QUALITY CONTROL BOARD
SAN FRANCISCO BAY REGION

REGIONAL STANDARD PROVISIONS, AND MONITORING AND REPORTING REQUIREMENTS (SUPPLEMENT TO ATTACHMENT D)

FOR

NPDES WASTEWATER DISCHARGE PERMITS

APPLICABILITY

This document applies to dischargers covered by a National Pollutant Discharge Elimination System (NPDES) permit. This document does not apply to Municipal Separate Storm Sewer System (MS4) NPDES permits.

The purpose of this document is to supplement the requirements of Attachment D, Standard Provisions. The requirements in this supplemental document are designed to ensure permit compliance through preventative planning, monitoring, recordkeeping, and reporting. In addition, this document requires proper characterization of issues as they arise, and timely and full responses to problems encountered. To provide clarity on which sections of Attachment D this document supplements, this document is arranged in the same format as Attachment D.

I. STANDARD PROVISIONS - PERMIT COMPLIANCE

A. Duty to Comply – Not Supplemented

B. Need to Halt or Reduce Activity Not a Defense – Not Supplemented

C. Duty to Mitigate – This supplements I.C. of Standard Provisions (Attachment D)

1. Contingency Plan - The Discharger shall maintain a Contingency Plan as originally required by Regional Water Board Resolution 74-10 and as prudent in accordance with current municipal facility emergency planning. The Contingency Plan shall describe procedures to ensure that existing facilities remain in, or are rapidly returned to, operation in the event of a process failure or emergency incident, such as employee strike, strike by suppliers of chemicals or maintenance services, power outage, vandalism, earthquake, or fire. The Discharger may combine the Contingency Plan and Spill Prevention Plan into one document. Discharge in violation of the permit where the Discharger has failed to develop and implement a Contingency Plan as described below will be the basis for considering the discharge a willful and negligent violation of the permit pursuant to California Water Code Section 13387. The Contingency Plan shall, at a minimum, contain the provisions of a. through g. below.

a. Provision of personnel for continued operation and maintenance of sewerage facilities during employee strikes or strikes against contractors providing services.

b. Maintenance of adequate chemicals or other supplies and spare parts necessary for continued operations of sewerage facilities.

c. Provisions of emergency standby power.

d. Protection against vandalism.

e. Expeditious action to repair failures of, or damage to, equipment and sewer lines.

f. Report of spills and discharges of untreated or inadequately treated wastes, including measures taken to clean up the effects of such discharges.

g. Programs for maintenance, replacement, and surveillance of physical condition of equipment, facilities, and sewer lines.

2. Spill Prevention Plan - The Discharger shall maintain a Spill Prevention Plan to prevent accidental discharges and minimize the effects of such events. The Spill Prevention Plan shall:

a. Identify the possible sources of accidental discharge, untreated or partially treated waste bypass, and polluted drainage;

b. Evaluate the effectiveness of present facilities and procedures, and state when they became operational; and

c. Predict the effectiveness of the proposed facilities and procedures, and provide an implementation schedule containing interim and final dates when they will be constructed, implemented, or operational.

This Regional Water Board, after review of the Contingency and Spill Prevention Plans or their updated revisions, may establish conditions it deems necessary to control accidental discharges and to minimize the effects of such events. Such conditions may be incorporated as part of the permit upon notice to the Discharger.

D. Proper Operation & Maintenance – This supplements I.D of Standard Provisions (Attachment D)

1. Operation and Maintenance (O&M) Manual - The Discharger shall maintain an O&M Manual to provide the plant and regulatory personnel with a source of information describing all equipment, recommended operational strategies, process control monitoring, and maintenance activities. To remain a useful and relevant document, the O&M Manual shall be kept updated to reflect significant changes in treatment facility equipment and operational practices. The O&M Manual shall be maintained in usable condition and be available for reference and use by all relevant personnel and Regional Water Board staff.

2. Wastewater Facilities Status Report - The Discharger shall regularly review, revise, or update, as necessary, its Wastewater Facilities Status Report. This report shall document how the Discharger operates and maintains its wastewater collection, treatment, and disposal facilities to ensure that all facilities are adequately staffed, supervised, financed, operated, maintained, repaired, and upgraded as necessary to provide adequate and reliable transport, treatment, and disposal of all wastewater from both existing and planned future wastewater sources under the Discharger's service responsibilities.

3. Proper Supervision and Operation of Publicly Owned Treatment Works (POTWs) - POTWs shall be supervised and operated by persons possessing certificates of appropriate grade pursuant to Division 4, Chapter 14, Title 23 of the California Code of Regulations.

E. Property Rights – Not Supplemented

F. Inspection and Entry – Not Supplemented

G. Bypass – Not Supplemented

H. Upset – Not Supplemented

I. Other – This section is an addition to Standard Provisions (Attachment D)

1. Neither the treatment nor the discharge of pollutants shall create pollution, contamination, or nuisance as defined by California Water Code Section 13050.

2. Collection, treatment, storage, and disposal systems shall be operated in a manner that precludes public contact with wastewater, except in cases where excluding the public is infeasible, such as private property. If public contact with wastewater could reasonably occur on public property, warning signs shall be posted.

3. If the Discharger submits a timely and complete Report of Waste Discharge for permit reissuance, this permit continues in force and effect until a new permit is issued or the Regional Water Board rescinds the permit.

J. Storm Water – This section is an addition to Standard Provisions (Attachment D)

These provisions apply to facilities that do not direct all storm water flows from the facility to the wastewater treatment plant headworks.

1. Storm Water Pollution Prevention Plan (SWPP Plan)

The SWPP Plan shall be designed in accordance with good engineering practices and shall address the following objectives:

a. To identify pollutant sources that may affect the quality of storm water discharges; and

b. To identify, assign, and implement control measures and management practices to reduce pollutants in storm water discharges.

The SWPP Plan may be combined with the existing Spill Prevention Plan as required in accordance with Section C.2. The SWPP Plan shall be retained on-site and made available upon request of a representative of the Regional Water Board.

2. Source Identification

The SWPP Plan shall provide a description of potential sources that may be expected to add significant quantities of pollutants to storm water discharges, or may result in non-storm water discharges from the facility. The SWPP Plan shall include, at a minimum, the following items:

a. A topographical map (or other acceptable map if a topographical map is unavailable), extending one-quarter mile beyond the property boundaries of the facility, showing the wastewater treatment facility process areas, surface water bodies (including springs and wells), and discharge point(s) where the facility's storm water discharges to a municipal storm drain system or other points of discharge to waters of the State. The requirements of this paragraph may be included in the site map required under the following paragraph if appropriate.

b. A site map showing the following:

   1) Storm water conveyance, drainage, and discharge structures;

   2) An outline of the storm water drainage areas for each storm water discharge point;

   3) Paved areas and buildings;

   4) Areas of actual or potential pollutant contact with storm water or release to storm water, including but not limited to outdoor storage and process areas; material loading, unloading, and access areas; and waste treatment, storage, and disposal areas;

   5) Location of existing storm water structural control measures (i.e., berms, coverings, etc.);

   6) Surface water locations, including springs and wetlands; and

   7) Vehicle service areas.

c. A narrative description of the following:

   1) Wastewater treatment process activity areas;

   2) Materials, equipment, and vehicle management practices employed to minimize contact of significant materials of concern with storm water discharges;

   3) Material storage, loading, unloading, and access areas;

   4) Existing structural and non-structural control measures (if any) to reduce pollutants in storm water discharges; and

   5) Methods of on-site storage and disposal of significant materials.

d. A list of pollutants that have a reasonable potential to be present in storm water discharges in significant quantities.

3. Storm Water Management Controls

The SWPP Plan shall describe the storm water management controls appropriate for the facility and a time schedule for fully implementing such controls. The appropriateness and priorities of controls in the SWPP Plan shall reflect identified potential sources of pollutants. The description of storm water management controls to be implemented shall include, as appropriate:

a. Storm water pollution prevention personnel

Identify specific individuals (and job titles) that are responsible for developing, implementing, and reviewing the SWPP Plan.

b. Good housekeeping

Good housekeeping requires the maintenance of clean, orderly facility areas that discharge storm water. Material handling areas shall be inspected and cleaned to reduce the potential for pollutants to enter the storm drain conveyance system.

c. Spill prevention and response

Identify areas where significant materials can spill into or otherwise enter storm water conveyance systems and their accompanying drainage points. Specific material handling procedures, storage requirements, and cleanup equipment and procedures shall be identified, as appropriate. The necessary equipment to implement a cleanup shall be available, and personnel shall be trained in proper response, containment, and cleanup of spills. Internal reporting procedures for spills of significant materials shall be established.

d. Source control

Source controls include, for example, elimination or reduction of the use of toxic pollutants, covering of pollutant source areas, sweeping of paved areas, containment of potential pollutants, labeling of all storm drain inlets with “No Dumping” signs, isolation or separation of industrial and non-industrial pollutant sources so that runoff from these areas does not mix, etc.

e. Storm water management practices

Storm water management practices are practices other than those that control the sources of pollutants. Such practices include treatment or conveyance structures, such as drop inlets, channels, retention and detention basins, treatment vaults, infiltration galleries, filters, oil/water separators, etc. Based on assessment of the potential of various sources to contribute pollutants to storm water discharges in significant quantities, additional storm water management practices to remove pollutants from storm water discharges shall be implemented and design criteria shall be described.

f. Sediment and erosion control

Measures to minimize erosion around the storm water drainage and discharge points, such as riprap, revegetation, slope stabilization, etc., shall be described.

g. Employee training

Employee training programs shall inform all personnel responsible for implementing the SWPP Plan. Training shall address spill response, good housekeeping, and material management practices. New employee and refresher training schedules shall be identified.

h. Inspections

All inspections shall be done by trained personnel. Material handling areas shall be inspected for evidence of, or the potential for, pollutants entering storm water discharges. A tracking or follow up procedure shall be used to ensure appropriate response has been taken in response to an inspection. Inspections and maintenance activities shall be documented and recorded. Inspection records shall be retained for five years.

i. Records

A tracking and follow-up procedure shall be described to ensure that adequate response and corrective actions have been taken in response to inspections.

4. Annual Verification of SWPP Plan

An annual facility inspection shall be conducted to verify that all elements of the SWPP Plan are accurate and up-to-date. The results of this review shall be reported in the Annual Report to the Regional Water Board described in Section V.C.f.

K. **Biosolids Management** – This section is an addition to Standard Provisions (Attachment D)

Biosolids must meet the following requirements prior to land application. The Discharger must either demonstrate compliance or, if it sends the biosolids to another party for further treatment or distribution, must give the recipient the information necessary to ensure compliance.

1. Exceptional quality biosolids meet the pollutant concentration limits in Table III of 40 CFR Part 503.13, Class A pathogen limits, and one of the vector attraction reduction requirements in 503.33(b)(1)-(b)(8). Such biosolids do not have to be tracked further for compliance with general requirements (503.12) and management practices (503.14).

2. Biosolids used for agricultural land, forest, or reclamation shall meet the pollutant limits in Table I (ceiling concentrations) and Table II or Table III (cumulative loadings or pollutant concentration limits) of 503.13. They shall also meet the general requirements (503.12) and management practices (503.14) (if not exceptional quality biosolids) for Class A or Class B pathogen levels with associated access restrictions (503.32) and one of the 10 vector attraction reduction requirements in 503.33(b)(1)-(b)(10).

3. Biosolids used for lawn or home gardens must meet exceptional quality biosolids limits.

4. Biosolids sold or given away in a bag or other container must meet the pollutant limits in either Table III or Table IV (pollutant concentration limits or annual pollutant loading rate limits) of 503.13. If Table IV is used, a label or information sheet must be attached to the biosolids packing that explains Table IV (see 503.14). The biosolids must also meet the Class A pathogen limits and one of the vector attraction reduction requirements in 503.33(b)(1)-(b)(8).

II. STANDARD PROVISIONS – PERMIT ACTION – Not Supplemented

III. STANDARD PROVISIONS – MONITORING

A. Sampling and Analyses – This section is a supplement to III.A and III.B of Standard Provisions (Attachment D)

1. Use of Certified Laboratories

Water and waste analyses shall be performed by a laboratory certified for these analyses in accordance with California Water Code Section 13176.

2. Use of Appropriate Minimum Levels

Table C lists the suggested analytical methods for the 126 priority pollutants and other toxic pollutants that should be used, unless a particular method or minimum level (ML) is required in the MRP.

For priority pollutant monitoring, when there is more than one ML value for a given substance, the Discharger may select any one of the analytical methods cited in Table C for compliance determination, or any other method described in 40 CFR part 136 or approved by U.S. EPA (such as the 1600 series) if authorized by the Regional Water Board. However, the ML must be below the effluent limitation and water quality objective. If no ML value is below the effluent limitation and water quality objective, then the method must achieve an ML no greater than the lowest ML value indicated in Table C. All monitoring instruments and equipment shall be properly calibrated and maintained to ensure accuracy of measurements.

3. Frequency of Monitoring

The minimum schedule of sampling analysis is specified in the MRP portion of the permit.

a. Timing of Sample Collection

1) The Discharger shall collect samples of influent on varying days selected at random and shall not include any plant recirculation or other sidestream wastes, unless otherwise stipulated by the MRP.

2) The Discharger shall collect samples of effluent on days coincident with influent sampling unless otherwise stipulated by the MRP or the Executive Officer. The Executive Officer may approve an alternative sampling plan if it is demonstrated to be representative of plant discharge flow and in compliance with all other permit requirements.

3) The Discharger shall collect grab samples of effluent during periods of day-time maximum peak effluent flows (or peak flows through secondary treatment units for facilities that recycle effluent flows).

4) Effluent sampling for conventional pollutants shall occur on at least one day of any multiple-day bioassay test the MRP requires. During the course of the test, on at least one day, the Discharger shall collect and retain samples of the discharge. In the event a bioassay test does

not comply with permit limits, the Discharger shall analyze these retained samples for pollutants that could be toxic to aquatic life and for which it has effluent limits.

i. The Discharger shall perform bioassay tests on final effluent samples; when chlorine is used for disinfection, bioassay tests shall be performed on effluent after chlorination-dechlorination; and

ii. The Discharger shall analyze for total ammonia nitrogen and calculate the amount of un-ionized ammonia whenever test results fail to meet the percent survival specified in the permit.

b. Conditions Triggering Accelerated Monitoring

1) If the results from two consecutive samples of a constituent monitored in a 30-day period exceed the monthly average limit for any parameter (or if the required sampling frequency is once per month and the monthly sample exceeds the monthly average limit), the Discharger shall, within 24 hours after the results are received, increase its sampling frequency to daily until the results from the additional sampling show that the parameter is in compliance with the monthly average limit.

2) If any maximum daily limit is exceeded, the Discharger shall increase its sampling frequency to daily within 24 hours after the results are received that indicate the exceedance of the maximum daily limit until two samples collected on consecutive days show compliance with the maximum daily limit.

3) If final or intermediate results of an acute bioassay test indicate a violation or threatened violation (e.g., the percentage of surviving test organisms of any single acute bioassay test is less than 70 percent), the Discharger shall initiate a new test as soon as practical, and the Discharger shall investigate the cause of the mortalities and report its findings in the next self monitoring report (SMR).

4) The Discharger shall calibrate chlorine residual analyzers against grab samples as frequently as necessary to maintain accurate control and reliable operation. If an effluent violation is detected, the Discharger shall collect grab samples at least every 30 minutes until compliance with the limit is achieved, unless the Discharger monitors chlorine residual continuously. In such cases, the Discharger shall continue to conduct continuous monitoring as required by its permit.

5) When a bypass occurs (except one subject to provision III.A.3.b.6 below), the Discharger shall monitor flows and collect samples on a daily basis for all constituents at affected discharge points that have effluent limits for the duration of the bypass (including acute toxicity using static renewals), except chronic toxicity, unless otherwise stipulated by the MRP.

6) Unless otherwise stipulated by the MRP, when a bypass approved pursuant to Attachment D, Standard Provisions, Sections I.G.2 or I.G.4, occurs, the Discharger shall monitor flows and, using appropriate procedures as specified in the MRP, collect and retain samples for affected discharge points on a daily basis for the duration of the bypass. The Discharger shall analyze for total suspended solids (TSS) using 24-hour composites (or more frequent increments) and for bacteria indicators with effluent limits using grab samples. If TSS exceeds 45 mg/L in any composite sample, the Discharger shall also analyze the retained samples for that discharge for all other constituents that have effluent limits, except oil and grease, mercury, dioxin-

TEQ, and acute and chronic toxicity. Additionally, at least once each year, the Discharger shall analyze the retained samples for one approved bypass discharge event for all other constituents that have effluent limits, except oil and grease, mercury, dioxin-TEQ, and acute and chronic toxicity. This monitoring shall be in addition to the minimum monitoring specified in the MRP.

c. Storm Water Monitoring

The requirements of this section only apply to facilities that are not covered by an NPDES permit for storm water discharges and where not all site storm drainage from process areas (i.e., areas of the treatment facility where chemicals or wastewater could come in contact with storm water) is directed to the headworks. For storm water not directed to the headworks during the wet season (October 1 to April 30), the Discharger shall:

1) Conduct visual observations of the storm water discharge locations during daylight hours at least once per month during a storm event that produces significant storm water discharge to observe the presence of floating and suspended materials, oil and grease, discoloration, turbidity, and odor, etc.

2) Measure (or estimate) the total volume of storm water discharge, collect grab samples of storm water discharge from at least two storm events that produce significant storm water discharge, and analyze the samples for oil and grease, pH, TSS, and specific conductance.

   The grab samples shall be taken during the first 30 minutes of the discharge. If collection of the grab samples during the first 30 minutes is impracticable, grab samples may be taken during the first hour of the discharge, and the Discharger shall explain in the Annual Report why the grab sample(s) could not be taken in the first 30 minutes.

3) Testing for the presence of non-storm water discharges shall be conducted no less than twice during the dry season (May 1 to September 30) at all storm water discharge locations. Tests may include visual observations of flows, stains, sludges, odors, and other abnormal conditions; dye tests; TV line surveys; or analysis and validation of accurate piping schematics. Records shall be maintained describing the method used, date of testing, locations observed, and test results.

4) Samples shall be collected from all locations where storm water is discharged. Samples shall represent the quality and quantity of storm water discharged from the facility. If a facility discharges storm water at multiple locations, the Discharger may sample a reduced number of locations if it establishes and documents through the monitoring program that storm water discharges from different locations are substantially identical.

5) Records of all storm water monitoring information and copies of all reports required by the permit shall be retained for a period of at least three years from the date of sample, observation, or report.

d. Receiving Water Monitoring

The requirements of this section only apply when the MRP requires receiving water sampling.

1) Receiving water samples shall be collected on days coincident with effluent sampling for conventional pollutants.

2) Receiving water samples shall be collected at each station on each sampling day during the period within one hour following low slack water. Where sampling during lower slack water is impractical, sampling shall be performed during higher slack water. Samples shall be collected within the discharge plume and down current of the discharge point so as to be representative, unless otherwise stipulated in the MRP.

3) Samples shall be collected within one foot of the surface of the receiving water, unless otherwise stipulated in the MRP.

B. Biosolids Monitoring – This section supplements III.B of Standard Provisions (Attachment D)

When biosolids are sent to a landfill, sent to a surface disposal site, or applied to land as a soil amendment, they must be monitored as follows:

1. Biosolids Monitoring Frequency

Biosolids disposal must be monitored at the following frequency:

Metric tons biosolids/365 days	Frequency
0-290	Once per year
290-1500	Quarterly
1500-15,000	Six times per year
Over 15,000	Once per month

(Metric tons are on a dry weight basis)

2. Biosolids Pollutants to Monitor

Biosolids shall be monitored for the following constituents:

- Land Application: Arsenic, cadmium, copper, mercury, molybdenum, nickel, lead, selenium, and zinc
- Municipal Landfill: Paint filter test (pursuant to 40 CFR 258)
- Biosolids-only Landfill or Surface Disposal Site (if no liner and leachate system): arsenic, chromium, and nickel

C. Standard Observations – This section is an addition to III of Standard Provisions (AttachmentD)

1. Receiving Water Observations

The requirements of this section only apply when the MRP requires standard observations of the receiving water. Standard observations shall include the following:

a. *Floating and suspended materials* (e.g., oil, grease, algae, and other macroscopic particulate matter): presence or absence, source, and size of affected area.

b. *Discoloration and turbidity*: description of color, source, and size of affected area.

c. *Odor*: presence or absence, characterization, source, distance of travel, and wind direction.

d. *Beneficial water use*: presence of water-associated waterfowl or wildlife, fisherpeople, and other recreational activities in the vicinity of each sampling station.

e. *Hydrographic condition*: time and height of corrected high and low tides (corrected to nearest National Oceanic and Atmospheric Administration location for the sampling date and time of sample collection).

f. *Weather conditions*:

1) Air temperature; and

2) Total precipitation during the five days prior to observation.

2. Wastewater Effluent Observations

The requirements of this section only apply when the MRP requires wastewater effluent standard observations. Standard observations shall include the following:

a. *Floating and suspended material of wastewater origin* (e.g., oil, grease, algae, and other macroscopic particulate matter): presence or absence.

b. *Odor*: presence or absence, characterization, source, distance of travel, and wind direction.

3. Beach and Shoreline Observations

The requirements of this section only apply when the MRP requires beach and shoreline standard observations. Standard observations shall include the following:

a. *Material of wastewater origin*: presence or absence, description of material, estimated size of affected area, and source.

b. *Beneficial use*: estimate number of people participating in recreational water contact, non-water contact, or fishing activities.

4. Land Retention or Disposal Area Observations

The requirements of this section only apply to facilities with on-site surface impoundments or disposal areas that are in use. This section applies to both liquid and solid wastes, whether confined or unconfined. The Discharger shall conduct the following for each impoundment:

a. Determine the amount of freeboard at the lowest point of dikes confining liquid wastes.

b. Report evidence of leaching liquid from area of confinement and estimated size of affected area. Show affected area on a sketch and volume of flow (e.g., gallons per minute [gpm]).

c. Regarding odor, describe presence or absence, characterization, source, distance of travel, and wind direction.

d. Estimate number of waterfowl and other water-associated birds in the disposal area and vicinity.

5. Periphery of Waste Treatment and/or Disposal Facilities Observations

The requirements of this section only apply when the MRP specifies periphery standard observations. Standard observations shall include the following:

a. *Odor*: presence or absence, characterization, source, and distance of travel.

b. *Weather conditions*: wind direction and estimated velocity.

IV. STANDARD PROVISIONS – RECORDS

A. Records to be Maintained – This supplements IV.A of Standard Provisions (Attachment D)

The Discharger shall maintain records in a manner and at a location (e.g., wastewater treatment plant or Discharger offices) such that the records are accessible to Regional Water Board staff. The minimum period of retention specified in Section IV, Records, of the Federal Standard Provisions shall be extended during the course of any unresolved litigation regarding the subject discharge, or when requested by the Regional Water Board or Regional Administrator of U.S. EPA, Region IX.

A copy of the permit shall be maintained at the discharge facility and be available at all times to operating personnel.

B. Records of monitoring information shall include – This supplements IV.B of Standard Provision (Attachment D)

1. Analytical Information

Records shall include analytical method detection limits, minimum levels, reporting levels, and related quantification parameters.

2. Flow Monitoring Data

For all required flow monitoring (e.g., influent and effluent flows), the additional records shall include the following, unless otherwise stipulated by the MRP:

a. Total volume for each day; and

b. Maximum, minimum, and average daily flows for each calendar month.

3. Wastewater Treatment Process Solids

a. For each treatment unit process that involves solids removal from the wastewater stream, records shall include the following:

1) Total volume or mass of solids removed from each collection unit (e.g., grit, skimmings, undigested biosolids, or combination) for each calendar month or other time period as appropriate, but not to exceed annually; and

2) Final disposition of such solids (e.g., landfill, other subsequent treatment unit).

b. For final dewatered biosolids from the treatment plant as a whole, records shall include the following:

1) Total volume or mass of dewatered biosolids for each calendar month;

2) Solids content of the dewatered biosolids; and

3) Final disposition of dewatered biosolids (disposal location and disposal method).

4. Disinfection Process

For the disinfection process, these additional records shall be maintained documenting process operation and performance:

a. For bacteriological analyses:

1) Wastewater flow rate at the time of sample collection; and

2) Required statistical parameters for cumulative bacterial values (e.g., moving median or geometric mean for the number of samples or sampling period identified in this Order).

b. For the chlorination process, when chlorine is used for disinfection, at least daily average values for the following:

1) Chlorine residual of treated wastewater as it enters the contact basin (mg/L);

2) Chlorine dosage (kg/day); and

3) Dechlorination chemical dosage (kg/day).

5. Treatment Process Bypasses

A chronological log of all treatment process bypasses, including wet weather blending, shall include the following:

a. Identification of the treatment process bypassed;

b. Dates and times of bypass beginning and end;

c. Total bypass duration;

d. Estimated total bypass volume; and

e. Description of, or reference to other reports describing, the bypass event, the cause, the corrective actions taken (except for wet weather blending that is in compliance with permit conditions), and any additional monitoring conducted.

6. Treatment Facility Overflows

This section applies to records for overflows at the treatment facility. This includes the headworks and all units and appurtenances downstream. The Discharger shall retain a chronological log of overflows at the treatment facility and records supporting the information provided in section V.E.2.

C. Claims of Confidentiality – Not Supplemented

V. STANDARD PROVISIONS – REPORTING

A. Duty to Provide Information – Not Supplemented

B. Signatory and Certification Requirements – Not Supplemented

C. Monitoring Reports – This section supplements V.C of Standard Provisions (Attachment D)

1. Self Monitoring Reports

For each reporting period established in the MRP, the Discharger shall submit an SMR to the Regional Water Board in accordance with the requirements listed in this document and at the frequency the MRP specifies. The purpose of the SMR is to document treatment performance, effluent quality, and compliance with the waste discharge requirements of this Order.

a. Transmittal letter

Each SMR shall be submitted with a transmittal letter. This letter shall include the following:

1) Identification of all violations of effluent limits or other waste discharge requirements found during the reporting period;

2) Details regarding violations: parameters, magnitude, test results, frequency, and dates;

3) Causes of violations;

4) Discussion of corrective actions taken or planned to resolve violations and prevent recurrences, and dates or time schedule of action implementation (if previous reports have been submitted that address corrective actions, reference to the earlier reports is satisfactory);

5) Data invalidation (Data should not be submitted in an SMR if it does not meet quality assurance/quality control standards. However, if the Discharger wishes to invalidate any measurement after it was submitted in an SMR, a letter shall identify the measurement suspected to be invalid and state the Discharger's intent to submit, within 60 days, a formal request to invalidate the measurement. This request shall include the original measurement in question, the reason for invalidating the measurement, all relevant documentation that

supports invalidation [e.g., laboratory sheet, log entry, test results, etc.], and discussion of the corrective actions taken or planned [with a time schedule for completion] to prevent recurrence of the sampling or measurement problem.);

6) If the Discharger blends, the letter shall describe the duration of blending events and certify whether blended effluent was in compliance with the conditions for blending; and

7) Signature (The transmittal letter shall be signed according to Section V.B of this Order, Attachment D – Standard Provisions.).

b. Compliance evaluation summary

Each report shall include a compliance evaluation summary. This summary shall include each parameter for which the permit specifies effluent limits, the number of samples taken during the monitoring period, and the number of samples that exceed applicable effluent limits.

c. Results of analyses and observations

1) Tabulations of all required analyses and observations, including parameter, date, time, sample station, type of sample, test result, method detection limit, method minimum level, and method reporting level, if applicable, signed by the laboratory director or other responsible official.

2) When determining compliance with an average monthly effluent limitation and more than one sample result is available in a month, the Discharger shall compute the arithmetic mean unless the data set contains one or more reported determinations of detected but not quantified (DNQ) or nondetect (ND). In those cases, the Discharger shall compute the median in place of the arithmetic mean in accordance with the following procedure:

i. The data set shall be ranked from low to high, reported ND determinations lowest, DNQ determinations next, followed by quantified values (if any). The order of the individual ND or DNQ determinations is unimportant.

ii. The median value of the data set shall be determined. If the data set has an odd number of data points, then the median is the middle value. If the data set has an even number of data points, then the median is the average of the two values around the middle unless one or both of the points are ND or DNQ, in which case the median value shall be the lower of the two data points where DNQ is lower than a value and ND is lower than DNQ.

If a sample result, or the arithmetic mean or median of multiple sample results, is below the reporting limit, and there is evidence that the priority pollutant is present in the effluent above an effluent limitation and the Discharger conducts a Pollutant Minimization Program, the Discharger shall not be deemed out of compliance.

3) Dioxin-TEQ Reporting: The Discharger shall report for each dioxin and furan congener the analytical results of effluent monitoring, including the quantifiable limit (reporting level), the method detection limit, and the measured concentration. The Discharger shall report all measured values of individual congeners, including data qualifiers. When calculating dioxin-TEQ, the Discharger shall set congener concentrations below the minimum levels (ML) to zero. The Discharger shall calculate and report dioxin-TEQs using the following formula,

where the MLs, toxicity equivalency factors (TEFs), and bioaccumulation equivalency factors (BEFs) are as provided in Table A:

$$\text{Dioxin-TEQ} = \Sigma\ (C_x \times TEF_x \times BEF_x)$$

where: C_x = measured or estimated concentration of congener *x*
TEF_x = toxicity equivalency factor for congener x
BEFx = bioaccumulation equivalency factor for congener *x*

Table A

Minimum Levels, Toxicity Equivalency Factors,
and Bioaccumulation Equivalency Factors

Dioxin or Furan Congener	Minimum Level (pg/L)	1998 Toxicity Equivalency Factor (TEF)	Bioaccumulation Equivalency Factor (BEF)
2,3,7,8-TCDD	10	1.0	1.0
1,2,3,7,8-PeCDD	50	1.0	0.9
1,2,3,4,7,8-HxCDD	50	0.1	0.3
1,2,3,6,7,8-HxCDD	50	0.1	0.1
1,2,3,7,8,9-HxCDD	50	0.1	0.1
1,2,3,4,6,7,8-HpCDD	50	0.01	0.05
OCDD	100	0.0001	0.01
2,3,7,8-TCDF	10	0.1	0.8
1,2,3,7,8-PeCDF	50	0.05	0.2
2,3,4,7,8-PeCDF	50	0.5	1.6
1,2,3,4,7,8-HxCDF	50	0.1	0.08
1,2,3,6,7,8-HxCDF	50	0.1	0.2
1,2,3,7,8,9-HxCDF	50	0.1	0.6
2,3,4,6,7,8-HxCDF	50	0.1	0.7
1,2,3,4,6,7,8-HpCDF	50	0.01	0.01
1,2,3,4,7,8,9-HpCDF	50	0.01	0.4
OCDF	100	0.0001	0.02

d. Data reporting for results not yet available

The Discharger shall make all reasonable efforts to obtain analytical data for required parameter sampling in a timely manner. Certain analyses require additional time to complete analytical processes and report results. For cases where required monitoring parameters require additional time to complete analytical processes and reports, and results are not available in time to be included in the SMR for the subject monitoring period, the Discharger shall describe such circumstances in the SMR and include the data for these parameters and relevant discussions of any observed exceedances in the next SMR due after the results are available.

e. Flow data

The Discharger shall provide flow data tabulation pursuant to Section IV.B.2.

f. Annual self monitoring report requirements

By the date specified in the MRP, the Discharger shall submit an annual report to the Regional Water Board covering the previous calendar year. The report shall contain the following:

1) Annual compliance summary table of treatment plant performance, including documentation of any blending events;

2) Comprehensive discussion of treatment plant performance and compliance with the permit (This discussion shall include any corrective actions taken or planned, such as changes to facility equipment or operation practices that may be needed to achieve compliance, and any other actions taken or planned that are intended to improve performance and reliability of the Discharger's wastewater collection, treatment, or disposal practices.);

3) Both tabular and graphical summaries of the monitoring data for the previous year if parameters are monitored at a frequency of monthly or greater;

4) List of approved analyses, including the following:

(i) List of analyses for which the Discharger is certified;

(ii) List of analyses performed for the Discharger by a separate certified laboratory (copies of reports signed by the laboratory director of that laboratory shall not be submitted but be retained onsite); and

(iii) List of "waived" analyses, as approved;

5) Plan view drawing or map showing the Discharger's facility, flow routing, and sampling and observation station locations;

6) Results of annual facility inspection to verify that all elements of the SWPP Plan are accurate and up to date (only required if the Discharger does not route all storm water to the headworks of its wastewater treatment plant); and

7) Results of facility report reviews (The Discharger shall regularly review, revise, and update, as necessary, the O&M Manual, the Contingency Plan, the Spill Prevention Plan, and Wastewater Facilities Status Report so that these documents remain useful and relevant to current practices. At a minimum, reviews shall be conducted annually. The Discharger shall include, in each Annual Report, a description or summary of review and evaluation procedures, recommended or planned actions, and an estimated time schedule for implementing these actions. The Discharger shall complete changes to these documents to ensure they are up-to-date.).

g. Report submittal

The Discharger shall submit SMRs to:

California Regional Water Quality Control Board

San Francisco Bay Region
1515 Clay Street, Suite 1400
Oakland, CA 94612
Attn: NPDES Wastewater Division

h. Reporting data in electronic format

The Discharger has the option to submit all monitoring results in an electronic reporting format approved by the Executive Officer. If the Discharger chooses to submit SMRs electronically, the following shall apply:

1) *Reporting Method*: The Discharger shall submit SMRs electronically via a process approved by the Executive Officer (see, for example, the letter dated December 17, 1999, "Official Implementation of Electronic Reporting System [ERS]" and the progress report letter dated December 17, 2000).

2) *Monthly or Quarterly Reporting Requirements*: For each reporting period (monthly or quarterly as specified in the MRP), the Discharger shall submit an electronic SMR to the Regional Water Board in accordance with the provisions of Section V.C.1.a-e, except for requirements under Section V.C.1.c(1) where ERS does not have fields for dischargers to input certain information (e.g., sample time). However, until U.S. EPA approves the electronic signature or other signature technologies, Dischargers that use ERS shall submit a hard copy of the original transmittal letter, an ERS printout of the data sheet, and a violation report (a receipt of the electronic transmittal shall be retained by the Discharger). This electronic SMR submittal suffices for the signed tabulations specified under Section V.C.1.c(1).

3) *Annual Reporting Requirements*: Dischargers who have submitted data using the ERS for at least one calendar year are exempt from submitting the portion of the annual report required under Section V.C.1.f(1) and (3).

D. **Compliance Schedules** – Not supplemented

E. **Twenty-Four Hour Reporting** – This section supplements V.E of Standard Provision (Attachment D)

1. Spill of Oil or Other Hazardous Material Reports

a. Within 24 hours of becoming aware of a spill of oil or other hazardous material that is not contained onsite and completely cleaned up, the Discharger shall report by telephone to the Regional Water Board at (510) 622-2369.

b. The Discharger shall also report such spills to the State Office of Emergency Services [telephone (800) 852-7550] only when the spills are in accordance with applicable reporting quantities for hazardous materials.

c. The Discharger shall submit a written report to the Regional Water Board within five working days following telephone notification unless directed otherwise by Regional Water Board staff. A report submitted electronically is acceptable. The written report shall include the following:

1) Date and time of spill, and duration if known;

2) Location of spill (street address or description of location);

3) Nature of material spilled;

4) Quantity of material involved;

5) Receiving water body affected, if any;

6) Cause of spill;

7) Estimated size of affected area;

8) Observed impacts to receiving waters (e.g., oil sheen, fish kill, water discoloration);

9) Corrective actions taken to contain, minimize, or clean up the spill;

10) Future corrective actions planned to be taken to prevent recurrence, and schedule of implementation; and

11) Persons or agencies notified.

2. Unauthorized Discharges from Municipal Wastewater Treatment Plants[1]

The following requirements apply to municipal wastewater treatment plants that experience an unauthorized discharge at their treatment facilities and are consistent with and supercede requirements imposed on the Discharger by the Executive Officer by letter of May 1, 2008, issued pursuant to California Water Code Section 13383.

a. Two (2)-Hour Notification

For any unauthorized discharges that result in a discharge to a drainage channel or a surface water, the Discharger shall, as soon as possible, but not later than two (2) hours after becoming aware of the discharge, notify the State Office of Emergency Services (telephone 800-852-7550), the local health officers or directors of environmental health with jurisdiction over the affected water bodies, and the Regional Water Board. The notification to the Regional Water Board shall be via the Regional Water Board's online reporting system at www.wbers.net, and shall include the following:

1) Incident description and cause;

2) Location of threatened or involved waterway(s) or storm drains;

3) Date and time the unauthorized discharge started;

4) Estimated quantity and duration of the unauthorized discharge (to the extent known), and the estimated amount recovered;

[1] California Code of Regulations, Title 23, Section 2250(b), defines an unauthorized discharge to be a discharge, not regulated by waste discharge requirements, of treated, partially treated, or untreated wastewater resulting from the intentional or unintentional diversion of wastewater from a collection, treatment or disposal system.

5) Level of treatment prior to discharge (e.g., raw wastewater, primary treated, undisinfected secondary treated, and so on); and

6) Identity of the person reporting the unauthorized discharge.

b. 24-hour Certification

Within 24 hours, the Discharger shall certify to the Regional Water Board, at www.wbers.net, that the State Office of Emergency Services and the local health officers or directors of environmental health with jurisdiction over the affected water bodies have been notified of the unauthorized discharge.

c. 5-Day Written Report

Within five business days, the Discharger shall submit a written report, via the Regional Water Board's online reporting system at www.wbers.net, that includes, in addition to the information required above, the following:

1) Methods used to delineate the geographical extent of the unauthorized discharge within receiving waters;

2) Efforts implemented to minimize public exposure to the unauthorized discharge;

3) Visual observations of the impacts (if any) noted in the receiving waters (e.g., fish kill, discoloration of water) and the extent of sampling if conducted;

4) Corrective measures taken to minimize the impact of the unauthorized discharge;

5) Measures to be taken to minimize the chances of a similar unauthorized discharge occurring in the future;

6) Summary of Spill Prevention Plan or O&M Manual modifications to be made, if necessary, to minimize the chances of future unauthorized discharges; and

7) Quantity and duration of the unauthorized discharge, and the amount recovered.

d. Communication Protocol

To clarify the multiple levels of notification, certification, and reporting, the current communication requirements for unauthorized discharges from municipal wastewater treatment plants are summarized in Table B that follows.

Table B

Summary of Communication Requirements for Unauthorized Discharges[1] from Municipal Wastewater Treatment Plants

Discharger is required to:	Agency Receiving Information	Time frame	Method for Contact
1. Notify	California Emergency Management Agency (Cal EMA)	As soon as possible, but not later than **2 hours** after becoming aware of the unauthorized discharge.	Telephone – (800) 852-7550 (obtain a control number from Cal EMA)
	Local health department	As soon as possible, but not later than **2 hours** after becoming aware of the unauthorized discharge.	Depends on local health department
	Regional Water Board	As soon as possible, but not later than **2 hours** after becoming aware of the unauthorized discharge.	Electronic[2] www.wbers.net
2. Certify	Regional Water Board	As soon as possible, but not later than **24 hours** after becoming aware of the unauthorized discharge.	Electronic[3] www.wbers.net
3. Report	Regional Water Board	Within **5 business days** of becoming aware of the unauthorized discharge.	Electronic[4] www.wbers.net

[1] California Code of Regulations, Title 23, Section 2250(b), defines an unauthorized discharge to be a discharge, not regulated by waste discharge requirements, of treated, partially treated, or untreated wastewater resulting from the intentional or unintentional diversion of wastewater from a collection, treatment or disposal system.

[2] In the event that the Discharger is unable to provide online notification within 2 hours of becoming aware of an unauthorized discharge, it shall phone the Regional Water Board's spill hotline at (510) 622-2369 and convey the same information contained in the notification form. In addition, within 3 business days of becoming aware of the unauthorized discharge, the Discharger shall enter the notification information into the Regional Water Board's online system in electronic format.

[3] In most instances, the 2-hour notification will also satisfy 24-hour certification requirements. This is because the notification form includes fields for documenting that OES and the local health department have been contacted. In other words, if the Discharger is able to complete all the fields in the notification form within 2 hours, certification requirements are also satisfied. In the event that the Discharger is unable to provide online certification within 24 hours of becoming aware of an unauthorized discharge, it shall phone the Regional Water Board's spill hotline at (510) 622-2369 and convey the same information contained in the certification form. In addition, within 3 business days of becoming aware of the unauthorized discharge, the Discharger shall enter the certification information into the Regional Water Board's online system in electronic format.

[4] If the Discharger cannot satisfy the 5-day reporting requirements via the Regional Water Board's online reporting system, it shall submit a written report (preferably electronically in pdf) to the appropriate Regional Water Board case manager. In cases where the Discharger cannot satisfy the 5-day reporting requirements via the online reporting system, it must still complete the Regional Water Board's online reporting requirements within 15 calendar days of becoming aware of the unauthorized discharge.

F. Planned Changes – Not supplemented

G. Anticipated Noncompliance – Not supplemented

H. Other Noncompliance – Not supplemented

I. Other Information – Not supplemented

VI. STANDARD PROVISION – ENFORCEMENT – Not Supplemented

VII. ADDITIONAL PROVISIONS – NOTIFICATION LEVELS – Not Supplemented

VIII. DEFINITIONS – This section is an addition to Standard Provisions (Attachment D)

More definitions can be found in Attachment A of this NPDES Permit.

1. Arithmetic Calculations

a. Geometric mean is the antilog of the log mean or the back-transformed mean of the logarithmically transformed variables, which is equivalent to the multiplication of the antilogarithms. The geometric mean can be calculated with either of the following equations:

$$\text{Geometric Mean} = Anti\log\left(\frac{1}{N}\sum_{i=1}^{N} Log(C_i)\right)$$

or

$$\text{Geometric Mean} = (C_1 * C_2 * \ldots * C_N)^{1/N}$$

Where "N" is the number of data points for the period analyzed and "C" is the concentration for each of the "N" data points.

b. Mass emission rate is obtained from the following calculation for any calendar day:

$$\text{Mass emission rate (lb/day)} = \frac{8.345}{N}\sum_{i=1}^{N} Q_i C_i$$

$$\text{Mass emission rate (kg/day)} = \frac{3.785}{N}\sum_{i=1}^{N} Q_i C_i$$

In which "N" is the number of samples analyzed in any calendar day and "Q_i" and "C_i" are the flow rate (MGD) and the constituent concentration (mg/L) associated with each of the "N" grab samples that may be taken in any calendar day. If a composite sample is taken, "C_i" is the concentration measured in the composite sample and "Q_i" is the average flow rate occurring during the period over which the samples are composited. The daily concentration of a constituent measured over any calendar day shall be determined from the flow-weighted average of the same constituent in the combined waste streams as follows:

$$\text{Cd} = \text{Average daily concentration} = \frac{1}{Q_t}\sum_{i=1}^{N} Q_i C_i$$

In which "N" is the number of component waste streams and "Q" and "C" are the flow rate (MGD) and the constituent concentration (mg/L) associated with each of the "N" waste streams. "Q_t" is the total flow rate of the combined waste streams.

c. Maximum allowable mass emission rate, whether for a 24-hour, weekly 7-day, monthly 30-day, or 6-month period, is a limitation expressed as a daily rate determined with the formulas in the paragraph above, using the effluent concentration limit specified in the permit for the period and the specified allowable flow.

d. POTW removal efficiency is the ratio of pollutants removed by the treatment facilities to pollutants entering the treatment facilities (expressed as a percentage). The Discharger shall determine removal efficiencies using monthly averages (by calendar month unless otherwise specified) of pollutant concentration of influent and effluent samples collected at about the same time and using the following equation (or its equivalent):

Removal Efficiency (%) = 100 × [1-(Effluent Concentration/Influent Concentration)]

2. Biosolids means the solids, semi-liquid suspensions of solids, residues, screenings, grit, scum, and precipitates separated from or created in wastewater by the unit processes of a treatment system. It also includes, but is not limited to, all supernatant, filtrate, centrate, decantate, and thickener overflow and underflow in the solids handling parts of the wastewater treatment system.

3. Blending is the practice of recombining wastewater that has been biologically treated with wastewater that has bypassed around biological treatment units.

4. Bottom sediment sample is (1) a separate grab sample taken at each sampling station for the determination of selected physical-chemical parameters, or (2) four grab samples collected from different locations in the immediate vicinity of a sampling station while the boat is anchored and analyzed separately for macroinvertebrates.

5. Composite sample is a sample composed of individual grab samples collected manually or by an automatic sampling device on the basis of time or flow as specified in the MRP. For flow-based composites, the proportion of each grab sample included in the composite sample shall be within plus or minus five percent (+/-5%) of the representative flow rate of the waste stream being measured at the time of grab sample collection. Alternatively, equal volume grab samples may be individually analyzed with the flow-weighted average calculated by averaging flow-weighted ratios of each grab sample analytical result. Grab samples comprising time-based composite samples shall be collected at intervals not greater than those specified in the MRP. The quantity of each grab sample comprising a time-based composite sample shall be a set of flow proportional volumes as specified in the MRP. If a particular time-based or flow-based composite sampling protocol is not specified in the MRP, the Discharger shall determine and implement the most representative sampling protocol for the given parameter subject to Executive Officer approval.

6. Depth-integrated sample is defined as a water or waste sample collected by allowing a sampling device to fill during a vertical traverse in the waste or receiving water body being sampled. The Discharger shall collect depth-integrated samples in such a manner that the collected sample will be representative of the waste or water body at that sampling point.

7. Flow sample is an accurate measurement of the average daily flow volume using a properly calibrated and maintained flow measuring device.

8. Grab sample is an individual sample collected in a short period of time not exceeding 15 minutes. Grab samples represent only the condition that exists at the time the wastewater is collected.

9. Initial dilution is the process that results in the rapid and irreversible turbulent mixing of wastewater with receiving water around the point of discharge.

10. Overflow is the intentional or unintentional spilling or forcing out of untreated or partially treated wastes from a transport system (e.g., through manholes, at pump stations, and at collection points) upstream from the treatment plant headworks or from any part of a treatment plant facility.

11. Priority pollutants are those constituents referred to in 40 CFR Part 122 as promulgated in the Federal Register, Vol. 65, No. 97, Thursday, May 18, 2000, also known as the California Toxics Rule, the presence or discharge of which could reasonably be expected to interfere with maintaining designated uses.

12. Storm water means storm water runoff, snow melt runoff, and surface runoff and drainage. It excludes infiltration and runoff from agricultural land.

13. Toxic pollutant means any pollutant listed as toxic under federal Clean Water Act section 307(a)(1) or under 40 CFR 401.15.

14. Untreated waste is raw wastewater.

15. Waste, waste discharge, discharge of waste, and discharge are used interchangeably in the permit. The requirements of the permit apply to the entire volume of water, and the material therein, that is disposed of to surface and ground waters of the State of California.

Table C

List of Monitoring Parameters and Analytical Methods

CTR No.	Pollutant/Parameter	Analytical Method[5]	Minimum Levels[6] (µg/l)											
			GC	GCMS	LC	Color	FAA	GFAA	ICP	ICP MS	SPGFAA	HYD RIDE	CVAA	DCP
1.	Antimony	204.2					10	5	50	0.5	5	0.5		1000
2.	Arsenic	206.3				20		2	10	2	2	1		1000
3.	Beryllium						20	0.5	2	0.5	1			1000
4.	Cadmium	200 or 213					10	0.5	10	0.25	0.5			1000
5a.	Chromium (III)	SM 3500												
5b.	Chromium (VI)	SM 3500				10	5							1000
	Chromium (total)[7]	SM 3500					50	2	10	0.5	1			1000
6.	Copper	200.9					25	5	10	0.5	2			1000
7.	Lead	200.9					20	5	5	0.5	2			10,000
8.	Mercury	1631 (note)[8]												
9.	Nickel	249.2					50	5	20	1	5			1000
10.	Selenium	200.8 or SM 3114B or C						5	10	2	5	1		1000
11.	Silver	272.2					10	1	10	0.25	2			1000
12.	Thallium	279.2					10	2	10	1	5			1000
13.	Zinc	200 or 289					20		20	1	10			
14.	Cyanide	SM 4500 CN^- C or I				5								
15.	Asbestos (only required for dischargers to MUN waters)[9]	0100.2 [10]												
16.	2,3,7,8-TCDD and 17 congeners (Dioxin)	1613												
17.	Acrolein	603	2.0	5										
18.	Acrylonitrile	603	2.0	2										
19.	Benzene	602	0.5	2										
33.	Ethylbenzene	602	0.5	2										
39.	Toluene	602	0.5	2										
20.	Bromoform	601	0.5	2										
21.	Carbon Tetrachloride	601	0.5	2										
22.	Chlorobenzene	601	0.5	2										
23.	Chlorodibromomethane	601	0.5	2										
24.	Chloroethane	601	0.5	2										
25.	2-Chloroethylvinyl Ether	601	1	1										

[5] The suggested method is the U.S. EPA Method unless otherwise specified (SM = Standard Methods). The Discharger may use another U.S. EPA-approved or recognized method if that method has a level of quantification below the applicable water quality objective. Where no method is suggested, the Discharger has the discretion to use any standard method.

[6] Minimum levels are from the *State Implementation Policy*. They are the concentration of the lowest calibration standard for that technique based on a survey of contract laboratories. Laboratory techniques are defined as follows: GC = Gas Chromatography; GCMS = Gas Chromatography/Mass Spectrometry; LC = High Pressure Liquid Chromatography; Color = Colorimetric; FAA = Flame Atomic Absorption; GFAA = Graphite Furnace Atomic Absorption; ICP = Inductively Coupled Plasma; ICPMS = Inductively Coupled Plasma/Mass Spectrometry; SPGFAA = Stabilized Platform Graphite Furnace Atomic Absorption (i.e., U.S. EPA 200.9); Hydride = Gaseous Hydride Atomic Absorption; CVAA = Cold Vapor Atomic Absorption; DCP = Direct Current Plasma.

[7] Analysis for total chromium may be substituted for analysis of chromium (III) and chromium (VI) if the concentration measured is below the lowest hexavalent chromium criterion (11 ug/l).

[8] The Discharger shall use ultra-clean sampling (U.S. EPA Method 1669) and ultra-clean analytical methods (U.S. EPA Method 1631) for mercury monitoring. The minimum level for mercury is 2 ng/l (or 0.002 ug/l).

[9] MUN = Municipal and Domestic Supply. This designation, if applicable, is in the Findings of the permit.

[10] Determination of Asbestos Structures over 10 [micrometers] in Length in Drinking Water Using MCE Filters, U.S. EPA 600/R-94-134, June 1994.

CTR No.	Pollutant/Parameter	Analytical Method[5]	Minimum Levels[6] (µg/l)											
			GC	GCMS	LC	Color	FAA	GFAA	ICP	ICP MS	SPGFAA	HYD RIDE	CVAA	DCP
26.	Chloroform	601	0.5	2										
75.	1,2-Dichlorobenzene	601	0.5	2										
76.	1,3-Dichlorobenzene	601	0.5	2										
77.	1,4-Dichlorobenzene	601	0.5	2										
27.	Dichlorobromomethane	601	0.5	2										
28.	1,1-Dichloroethane	601	0.5	1										
29.	1,2-Dichloroethane	601	0.5	2										
30.	1,1-Dichloroethylene or 1,1-Dichloroethene	601	0.5	2										
31.	1,2-Dichloropropane	601	0.5	1										
32.	1,3-Dichloropropylene or 1,3-Dichloropropene	601	0.5	2										
34.	Methyl Bromide or Bromomethane	601	1.0	2										
35.	Methyl Chloride or Chloromethane	601	0.5	2										
36.	Methylene Chloride or Dichlorormethane	601	0.5	2										
37.	1,1,2,2-Tetrachloroethane	601	0.5	1										
38.	Tetrachloroethylene	601	0.5	2										
40.	1,2-Trans-Dichloroethylene	601	0.5	1										
41.	1,1,1-Trichloroethane	601	0.5	2										
42.	1,1,2-Trichloroethane	601	0.5	2										
43.	Trichloroethene	601	0.5	2										
44.	Vinyl Chloride	601	0.5	2										
45.	2-Chlorophenol	604	2	5										
46.	2,4-Dichlorophenol	604	1	5										
47.	2,4-Dimethylphenol	604	1	2										
48.	2-Methyl-4,6-Dinitrophenol or Dinitro-2-methylphenol	604	10	5										
49.	2,4-Dinitrophenol	604	5	5										
50.	2-Nitrophenol	604		10										
51.	4-Nitrophenol	604	5	10										
52.	3-Methyl-4-Chlorophenol	604	5	1										
53.	Pentachlorophenol	604	1	5										
54.	Phenol	604	1	1		50								
55.	2,4,6-Trichlorophenol	604	10	10										
56.	Acenaphthene	610 HPLC	1	1	0.5									
57.	Acenaphthylene	610 HPLC		10	0.2									
58.	Anthracene	610 HPLC		10	2									
60.	Benzo(a)Anthracene or 1,2 Benzanthracene	610 HPLC	10	5										
61.	Benzo(a)Pyrene	610 HPLC		10	2									
62.	Benzo(b)Fluoranthene or 3,4 Benzofluoranthene	610 HPLC		10	10									
63.	Benzo(ghi)Perylene	610 HPLC		5	0.1									
64.	Benzo(k)Fluoranthene	610 HPLC		10	2									
74.	Dibenzo(a,h)Anthracene	610 HPLC		10	0.1									
86.	Fluoranthene	610 HPLC	10	1	0.05									
87.	Fluorene	610 HPLC		10	0.1									
92.	Indeno(1,2,3-cd) Pyrene	610 HPLC		10	0.05									
100.	Pyrene	610 HPLC		10	0.05									
68.	Bis(2-Ethylhexyl)Phthalate	606 or 625	10	5										

CTR No.	Pollutant/Parameter	Analytical Method[5]	Minimum Levels[6] (µg/l)											
			GC	GCMS	LC	Color	FAA	GFAA	ICP	ICP MS	SPGFAA	HYD RIDE	CVAA	DCP
70.	Butylbenzyl Phthalate	606 or 625	10	10										
79.	Diethyl Phthalate	606 or 625	10	2										
80.	Dimethyl Phthalate	606 or 625	10	2										
81.	Di-n-Butyl Phthalate	606 or 625		10										
84.	Di-n-Octyl Phthalate	606 or 625		10										
59.	Benzidine	625		5										
65.	Bis(2-Chloroethoxy)Methane	625		5										
66.	Bis(2-Chloroethyl)Ether	625	10	1										
67.	Bis(2-Chloroisopropyl)Ether	625	10	2										
69.	4-Bromophenyl Phenyl Ether	625	10	5										
71.	2-Chloronaphthalene	625		10										
72.	4-Chlorophenyl Phenyl Ether	625		5										
73.	Chrysene	625		10	5									
78.	3,3'-Dichlorobenzidine	625		5										
82.	2,4-Dinitrotoluene	625	10	5										
83.	2,6-Dinitrotoluene	625		5										
85.	1,2-Diphenylhydrazine (note)[11]	625		1										
88.	Hexachlorobenzene	625	5	1										
89.	Hexachlorobutadiene	625	5	1										
90.	Hexachlorocyclopentadiene	625	5	5										
91.	Hexachloroethane	625	5	1										
93.	Isophorone	625	10	1										
94.	Naphthalene	625	10	1	0.2									
95.	Nitrobenzene	625	10	1										
96.	N-Nitrosodimethylamine	625	10	5										
97.	N-Nitrosodi-n-Propylamine	625	10	5										
98.	N-Nitrosodiphenylamine	625	10	1										
99.	Phenanthrene	625		5	0.05									
101.	1,2,4-Trichlorobenzene	625	1	5										
102.	Aldrin	608	0.005											
103.	α-BHC	608	0.01											
104.	β-BHC	608	0.005											
105.	γ-BHC (Lindane)	608	0.02											
106.	δ-BHC	608	0.005											
107.	Chlordane	608	0.1											
108.	4,4'-DDT	608	0.01											
109.	4,4'-DDE	608	0.05											
110.	4,4'-DDD	608	0.05											
111.	Dieldrin	608	0.01											
112.	Endosulfan (alpha)	608	0.02											
113.	Endosulfan (beta)	608	0.01											
114.	Endosulfan Sulfate	608	0.05											
115.	Endrin	608	0.01											
116.	Endrin Aldehyde	608	0.01											
117.	Heptachlor	608	0.01											
118.	Heptachlor Epoxide	608	0.01											

[11] Measurement for 1,2-Diphenylhydrazine may use azobenzene as a screen: if azobenzene is measured at >1 ug/l, then the Discharger shall analyze for 1,2-Diphenylhydrazine.

CTR No.	Pollutant/Parameter	Analytical Method[5]	Minimum Levels[6] (µg/l)											
			GC	GCMS	LC	Color	FAA	GFAA	ICP	ICP MS	SPGFAA	HYD RIDE	CVAA	DCP
119-125	PCBs: Aroclors 1016, 1221, 1232, 1242, 1248, 1254, 1260	608	0.5											
126.	Toxaphene	608	0.5											