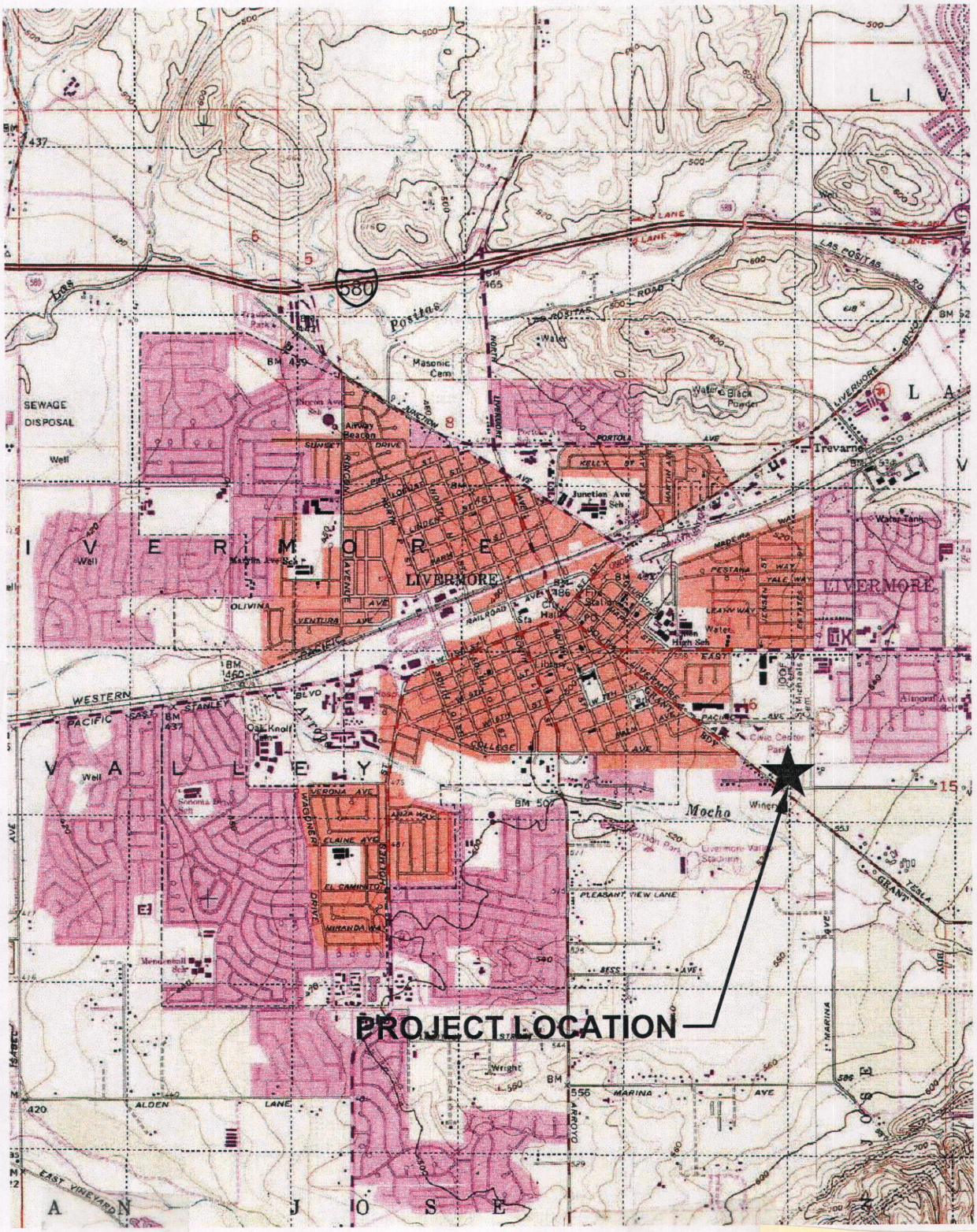

0 1000 FEET 0 500 1000 METERS

0 .5 1 MILE

N

Concannon Winery

Site Location Map

August 2012

Figure 1

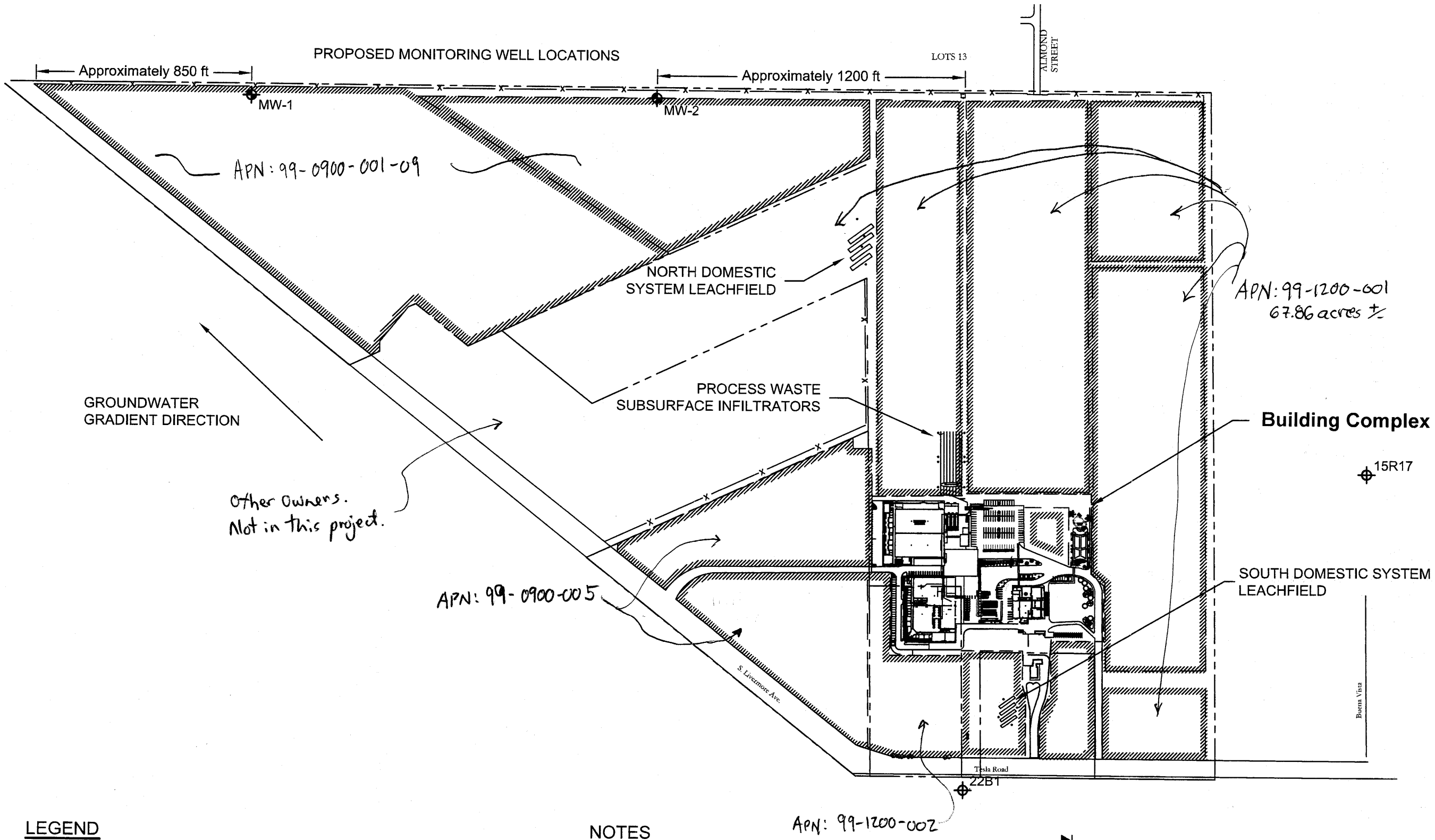

LEGEND

- Property Line
- Proposed monitoring well
- 15R17 Existing monitoring well
- P1 Performance well
- Vineyard Block

NOTES

1. All well locations are approximate.
2. Existing monitoring wells 22B1 and 15R17 are maintained and monitored by Zone 7 Water Agency referenced from figures 3.2-5 Groundwater Gradient Map and 3.2-10 Nitrate Concentrations (Zone 7 Water Agency)
3. Groundwater gradient identified on above mentioned figure 3.2-5.
4. The two proposed monitoring well locations are on the Northwest boundary of the site.
5. The north domestic wastewater system will be observed via 4 performance wells.
6. The process waste subsurface infiltrators are observed via 8 performance wells.
7. The south domestic system will be observed via 4 performance wells.

N

0 400 800

(FEET)

Concannon Winery

Site Map

August 2012

Figure 2

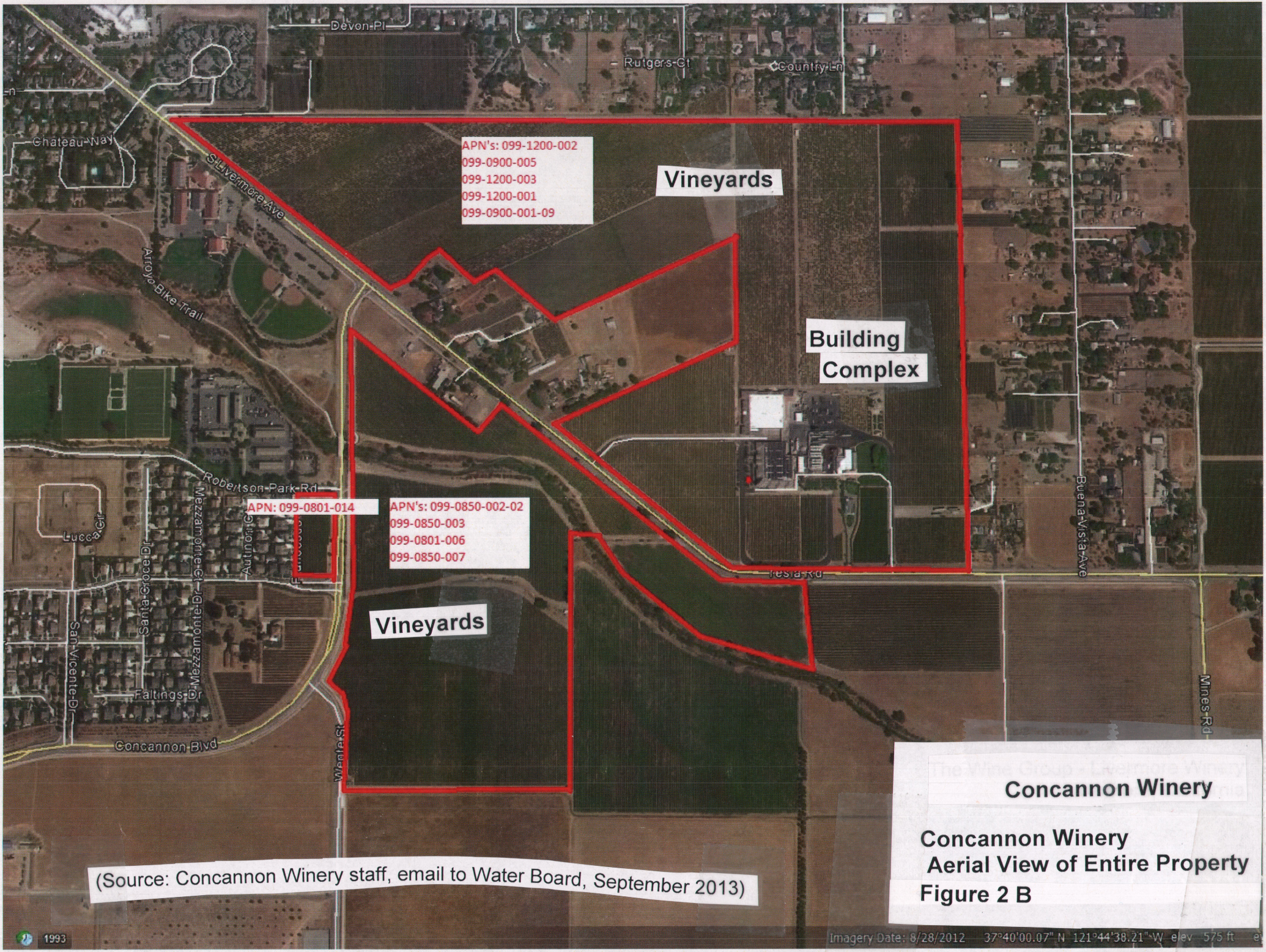

(Source: Concannon Winery staff, email to Water Board, September 2013)

Concannon Winery

Concannon Winery
Aerial View of Entire Property
Figure 2 B

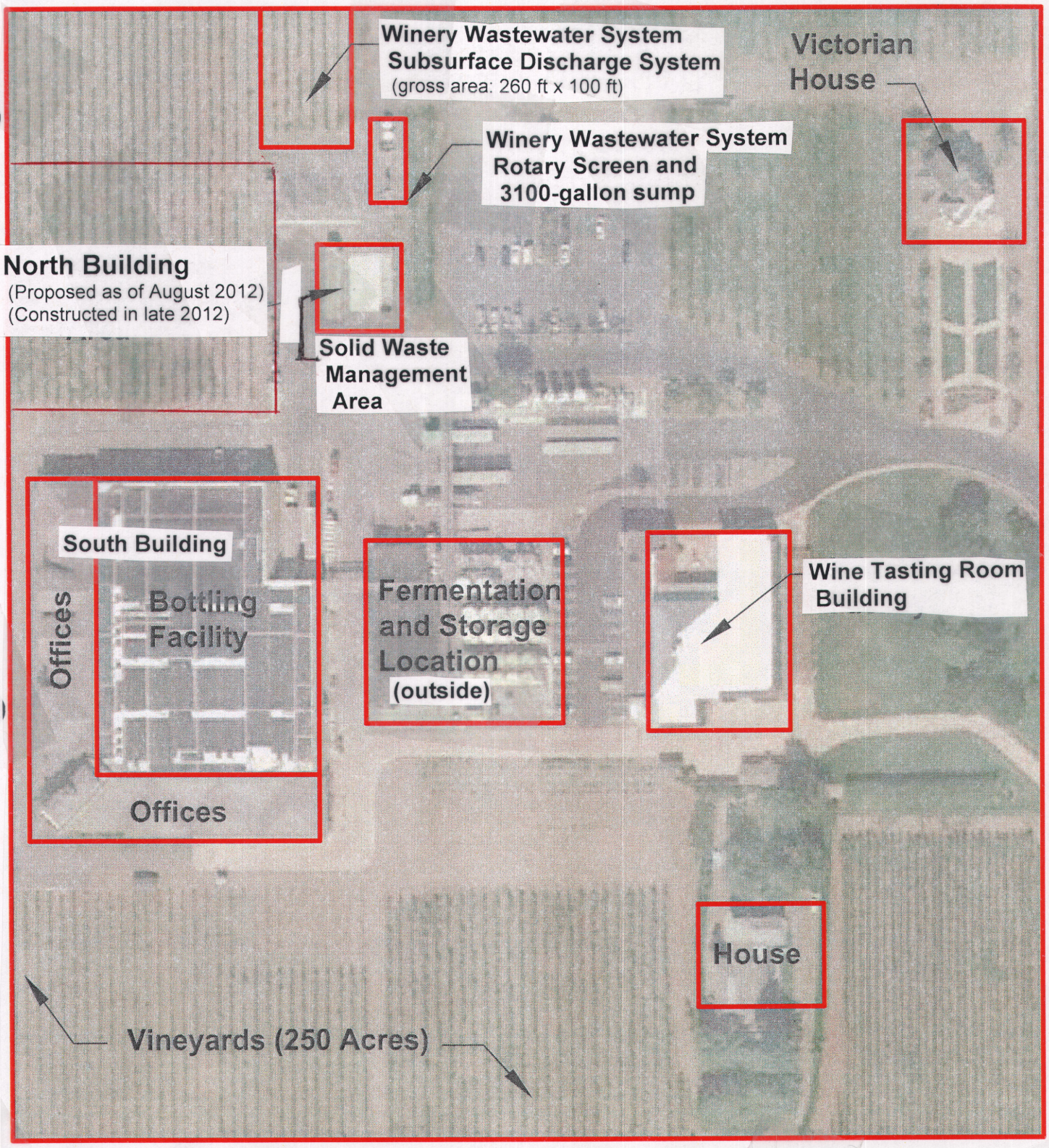

N

(Source: August 2012 ROWD Technical Report, Figure 3)

Concannon Winery

Aerial View of Concannon Winery Building Complex

Figure 3

August 2012

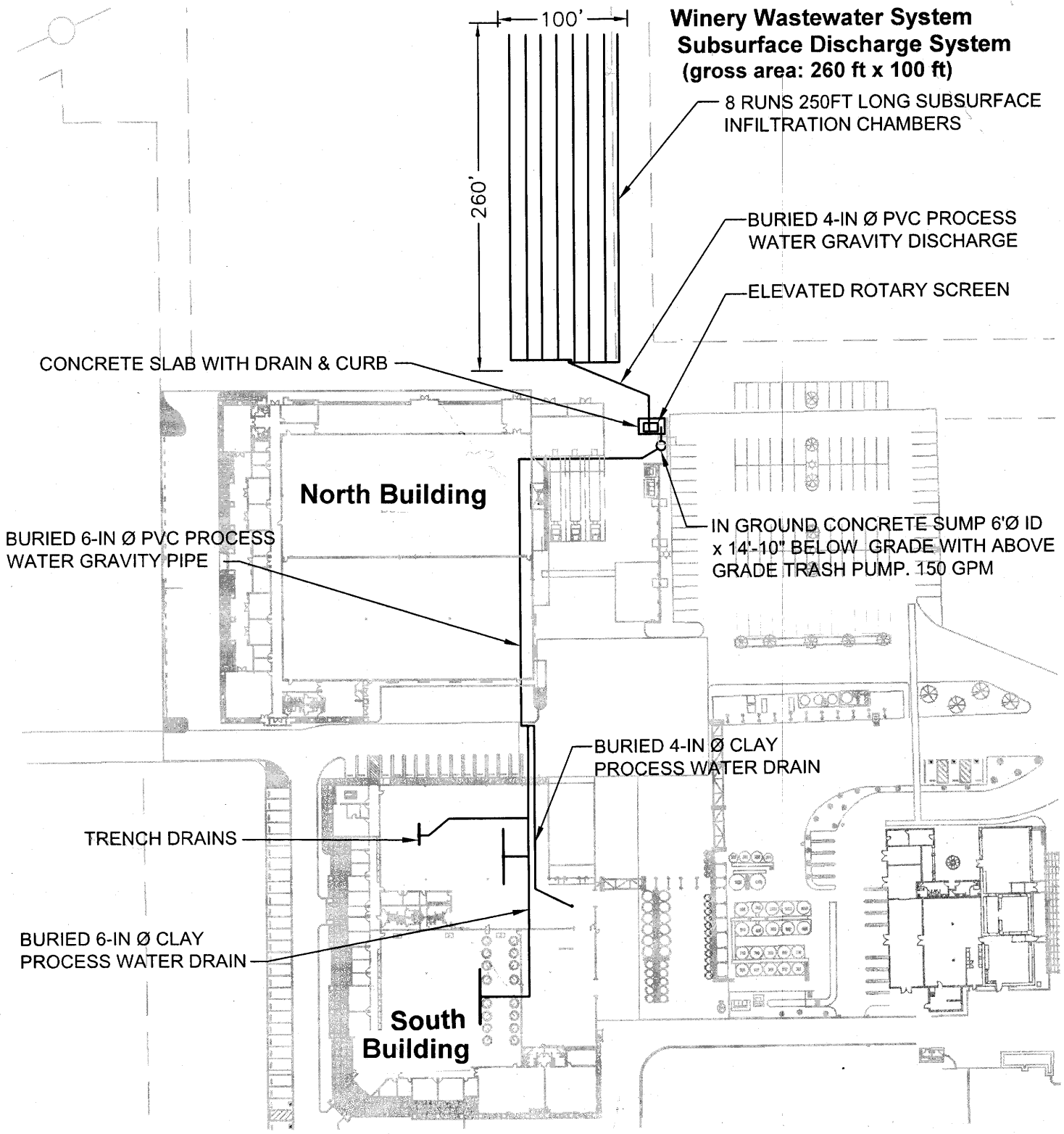

Concannon Winery

Winery Wastewater System
Plan View of Old System
(Existing Components, August 2012)

Figure 4

(Source: August 2012 ROWD Technical Report, Figure 4)

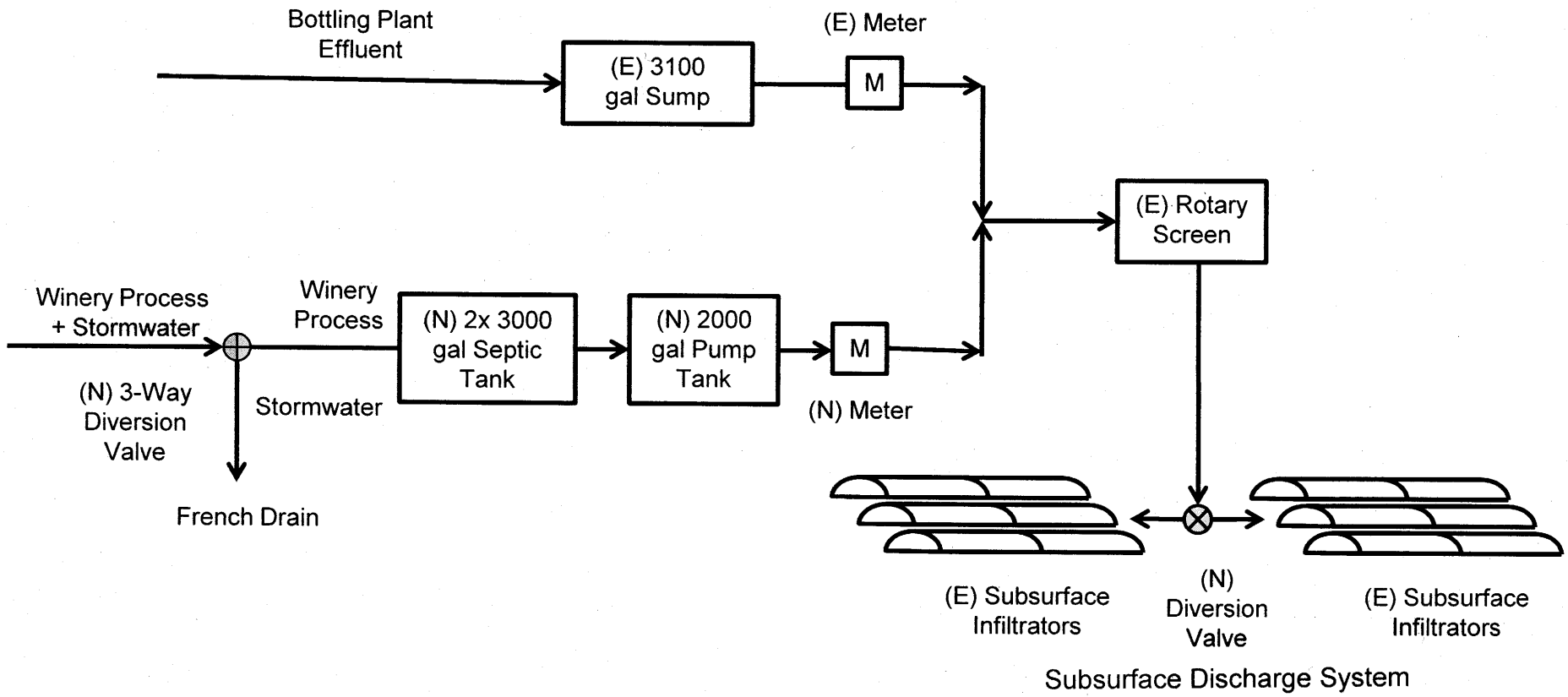

Legend

(E) Existing
(N) New
gal Gallons
SF Square Feet
M Meter

(Source: August 2012 ROWD Technical Report, Figure 5)

Concannon Winery

Winery Wastewater System
Schematic Diagram of New System
(Existing and Planned New Components as of August 2012)

Figure 5

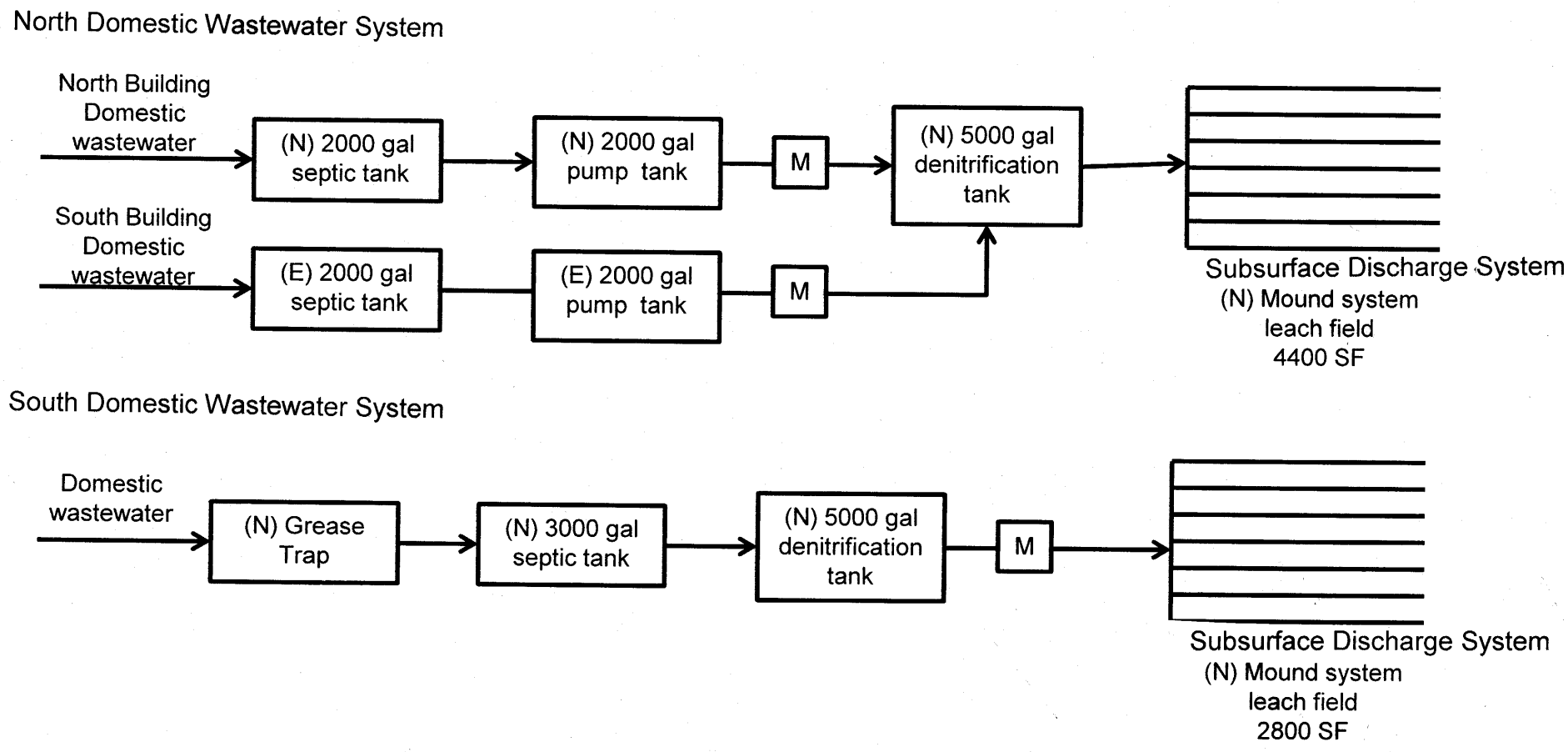

Legend

(E)	Existing
(N)	New
gal	Gallons
SF	Square Feet
M	Meter

(Source: August 2012 ROWD Technical Report, Figure 6)

Concannon Winery

Domestic Wastewater Systems
Schematic Diagram of New Systems
(Existing and Planned New Components as of August 2012)

Figure 6

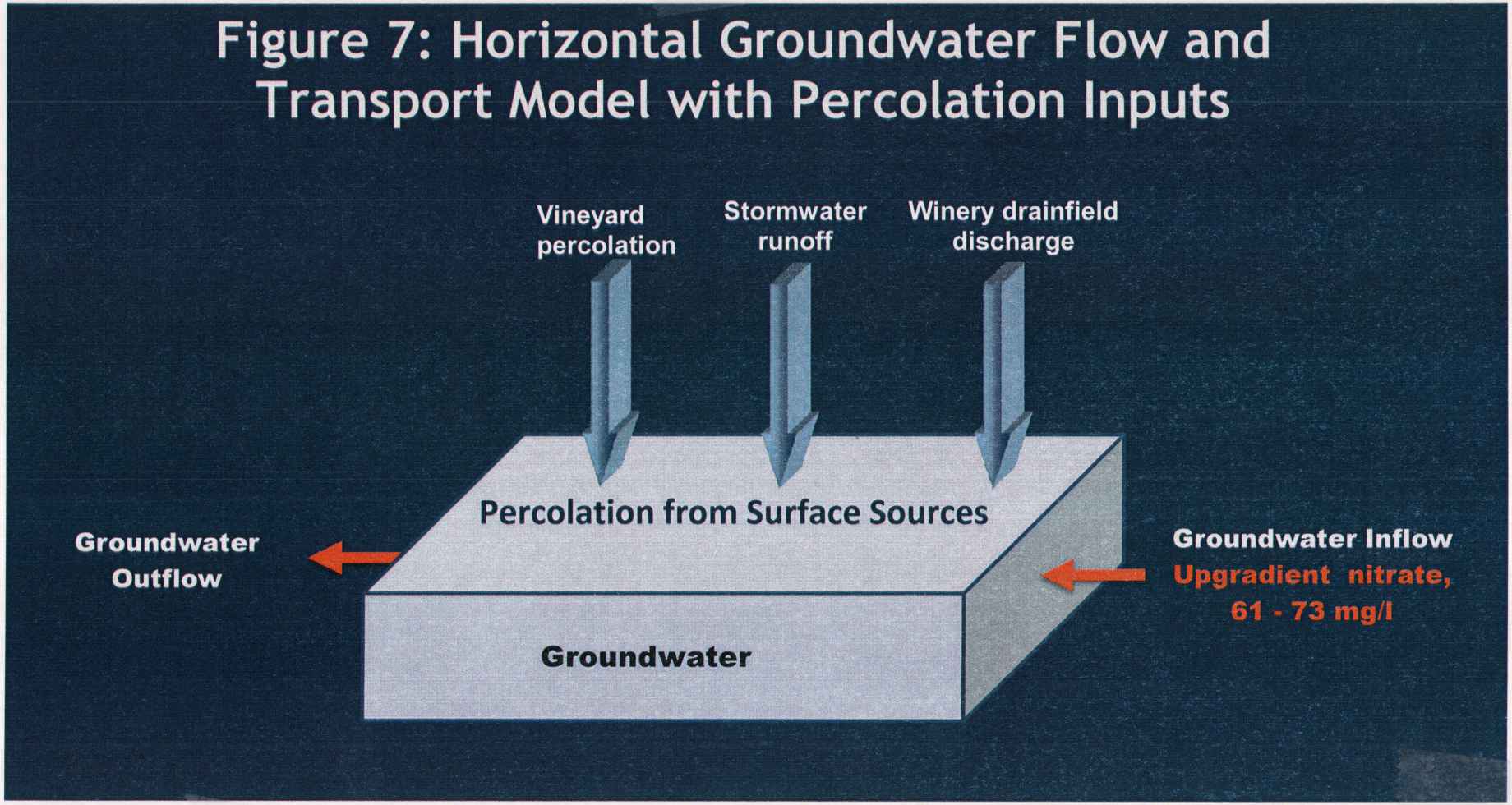

Concannon Winery

Groundwater Model Diagram

August 2012

Figure 7

(Source: August 2012 ROWD Technical Report, Figure 7)

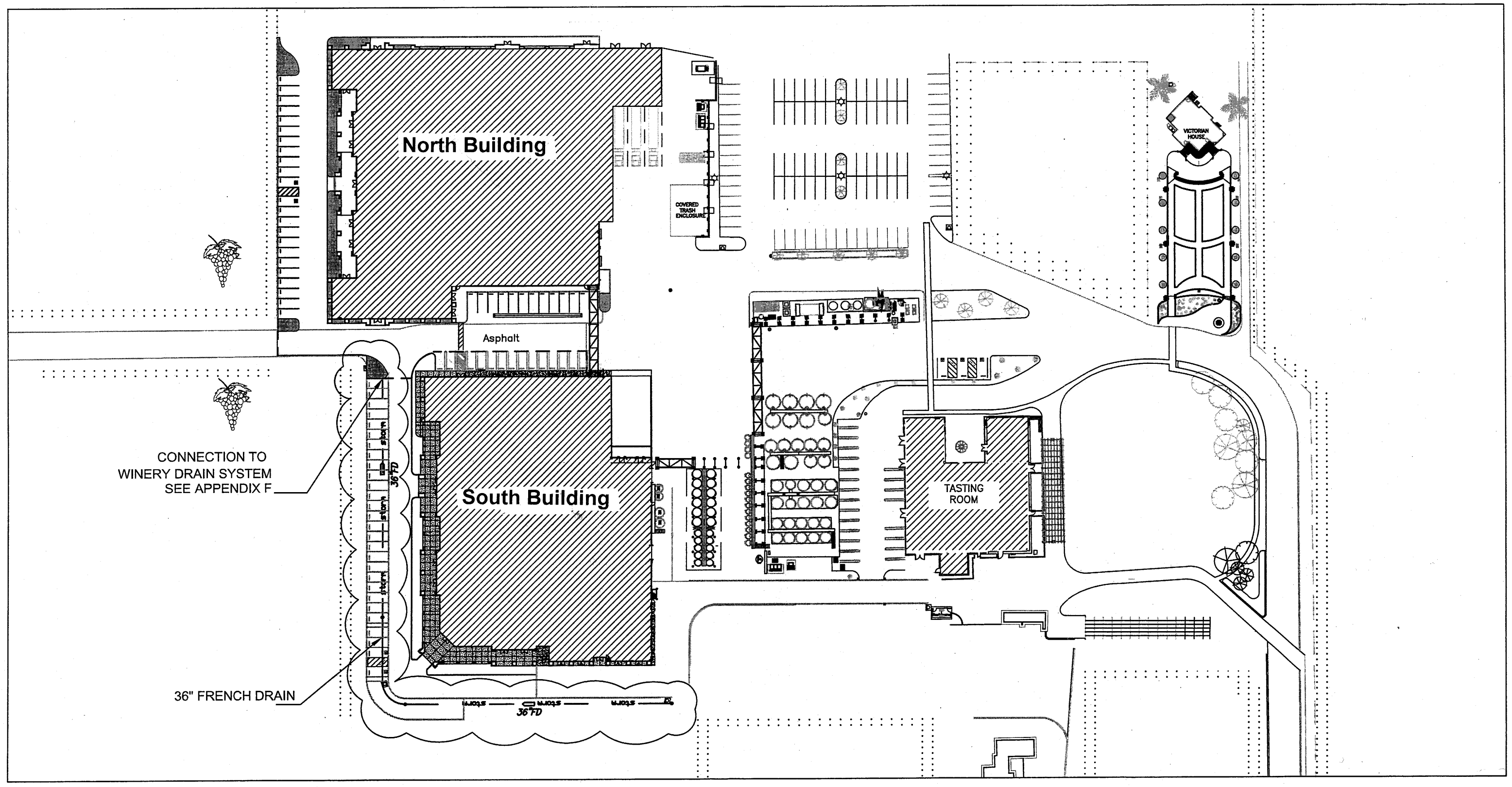

(Source: August 2012 ROWD Technical Report, Figure 8)

NOT TO SCALE

Concannon Winery

Stormwater Infiltration System ("French Drain") Plan View

August 2012

Figure 8