12. STORMWATER SYSTEM

12.1 Existing Stormwater Collection System

The existing stormwater system on Treasure Island is separated from the wastewater collection and treatment system. The existing stormwater system for the two islands consists of 6- to 42-inch diameter gravity pipes and lift stations with various-sized outfalls along the perimeter of the Islands that discharge directly into the San Francisco Bay. Existing pipe materials include PVC, asbestos cement, VCP, RCP and steel. There are approximately 31 existing outfalls on TI and approximately 32 outfalls on YBI.

12.1.1 Existing Stormwater Treatment Systems

There is currently no treatment of stormwater prior to discharge to the Bay.

12.2 Proposed Stormwater System

12.2.1 Proposed Stormwater Collection System

The Developer will be responsible for the design and construction of the proposed stormwater collection system. The proposed stormwater system will be a combination of gravity lines, lift stations, pump stations and outfalls to the Bay. The pipe material for the new system will meet the SFPUC standards but alternative pipe materials such as High Density Polyethylene (HDPE) or polyvinyl chloride (PVC) may be used if approved by the SFPUC. All of the existing pump/lift stations will be removed or replaced with new stations in phases designed to SFPUC standards as needed to serve the Project. Pump stations required to convey the 5-year storm event will include redundant pumps, alarm system, and emergency power if needed to prevent flooding beyond the depths described in Table 12.1. Pump stations required to deliver treatment flows to the treatment areas will not include redundant pumps or emergency power but will include an alarm system to notify if the pump station requires maintenance.

A conceptual layout of the proposed stormwater collection system is shown on Figure 12.1. The final designs shall optimize stormwater flows to ensure maximization of efficiency, and minimization and consolidation of required pump stations, including the potential wetland pump station. The final number of pump stations will be based on a system layout that follows reasonable engineering standards and is economically feasible. Concurrent with each Major Phase Application, the overall design will be evaluated by the SFPUC to determine if additional feasible opportunities to increase efficiency or reduce the reliance on pump stations exist.

The gravity system will be designed to accommodate long term settlement anticipated due to secondary compression of the soils or minimal amounts of remaining liquefaction due to seismic events. Final designs to be reviewed by the SFPUC.

12.2.1.1 Location of Stormwater System within New Streets

Figure 12.2 shows the typical alignment of the new stormwater system within the proposed streets.

The angled orientation of the streets on TI will result in stormwater flow in and out (through) manholes at a 68-degree reverse angle at many intersections. (see Figure 12.1).

12.2.1.2 Stormwater System Design Criteria

The design criteria used for the development of the stormwater system is based upon established industry operations and regulatory agency requirements described in the Treasure Island Stormwater Technical Memorandum submitted by the Developer. In subdivision processing, including the review and approval of subdivision improvements plans, the precise location and final design of the stormwater system will be generally consistent with this Infrastructure Plan and the Stormwater Technical Memorandum. The stormwater system shall be designed to SFPUC design standards and regulation, as modified in this Infrastructure Plan, with exceptions to case-by-case scenarios as approved by the SFPUC.

The following design criteria will be used to design the new stormwater collection system:

1. Design Storm Frequency:
   A 5-year rain event as defined by the "San Francisco Rainfall Rate Table 1941 Plan I-3903.4" will be maintained within the stormwater system. Storm frequency larger than 5-years will be allowed to run in the streets as overland flow.

2. Design Tide:
   The stormwater collection system will be designed to accommodate 100-year tide elevations. Moffatt & Nichol has completed an Extreme High Water Level Analysis to determine the 100-year high tide as part of their April, 2009 "Treasure Island

Coastal Flooding Study". Based on their review of the historic tide data for the San Francisco Bay the 100-year high tide, or Base Flood Elevation (BFE), for Treasure Island is 9.2 (NAVD88).

A description of the Adaptive Management strategy for SLR is included in Section 5.

3. Hydraulic Grade Line:
   The hydraulic grade line criteria will be based on the City of San Francisco Subdivision Code;

   > "Sewer sizes shall be selected so that the hydraulic grade line shall, in general, be four feet below the pavement or ground surface, and at no point less than two feet. The tidal elevation to be used in hydraulic computations, where applicable, shall be -3.5, City datum"

   The tidal elevation of -3.5 City Datum is equal to 7.81 NAVD 88 Datum. The design tide for this infrastructure plan will be the current 100-year high tide of 9.2 NAVD 88. Therefore the City of San Francisco Subdivision Code requirement for depth of hydraulic grade line below pavement surface will by adjusted by 1.39 feet (9.2-7.81=1.39) to 2.61 feet below the pavement surface. Hydraulic grade line criteria does not supersede the Minimum Depth of Cover.

   The minimum hydraulic grade line for the different tide events, locations around the Island, and SLR are described in Table 12.2.

4. Velocity:
   The velocity in the stormwater system shall not be less than 3 feet per second flowing by gravity and discharging against mean high tide with 16-inches of sea level rise (elevation 4.62-feet NAVD 88).

5. Minimum Depth of Cover:
   Minimum depth of cover shall be 4.0 feet. 3.0 feet minimum cover may be approved by SFPUC on a case-by-case basis.

A hydrologic model (SWMM or equivalent) for all of the development will be developed prior to approval of the Major Phase and Sub-Phase applications in coordination with the SFPUC consistent with the DRDAP.

12.2.1.3 Stormwater System Performance in New Development Area

The Hydraulic Requirements listed in Table 12.2 are the minimum performance criteria for the project. The TI grading plan and stormwater system within the new development area, however, will be designed to accommodate the 100-year storm during the 100-year tide with 16-inches of sea level rise (SLR) without relying on flow within the streets. Instead, during these extreme events, the stormwater runoff will pond in the street to a maximum depth equal to the top of curb at the low point and then flow into the piped system as capacity becomes available.

This overland release grading design described in Section 7 will protect the new building finished floors from storms larger than the 100-year event or system maintenance issue such as blocked catch basins or pipes. During either of these unlikely events, stormwater may pond up to the top of curb (or back of walk/right of way if approved by the SFPUC) elevation before releasing to the downstream drainage basins. This will continue through the downstream basins until there is capacity in the storm system or storm water is released to

the open space. The new building finish floor elevations will be above the back of walk/right of way elevation and therefore protected from flooding. The ponding depth and overland release occurrence for various storm events are summarized below.

Table 12.1: Street Ponding Depth and Overland Release Summary

Storm Event	Ponding Depth for:		
	Current Tide	**16-inches SLR**	**Maintenance Concerns**
Treatment	No Ponding (0 inches)	No Ponding (0 inches)	Up to Top of Curb
5-Year	No Ponding (0 inches)	No Ponding (0 inches)	Up to Top of Curb
100-Year	Top of Curb (6- inches)	Top of Curb (6- inches)	Up to Top of Curb

12.2.1.4 Sanitary Sewer Overflow Mitigations

The State of California has recently adopted a Sanitary Sewer Overflow (SSO) Policy to eliminate, to the extent possible, the potential for sewer overflows into the San Francisco Bay. The potential for SSO occurs when pump stations fail, or if lines become plugged and the sewer flows enter the storm drainage system. To prevent potential SSOs, the sewer pump stations proposed for the Project will include redundant pumps, alarm systems and emergency backup power supplies to run the pump stations when the power is out.

12.2.2 Proposed Outfall Structures

The stormwater outfall structures will be located at the perimeter of the Island and discharge to the Bay. See Figure 12.1 for approximate locations. The outfall structure will include the combination of an inlet sized to accommodate the 100-year overland release flows from the development area, a structure containing a “Tideflex” device that will keep the Bay water from backing up into the Island system during high tides, and the outfall structure in the Bay. The outfall elements will be sized to accommodate the 100-year storm flow volumes plus anticipated wave overtopping. See Figure 12.3 for a conceptual plan view and section of the outfall structures.

Table 12.2-Hydraulic Requirements

		Minimum Design Criteria	
	Tide/SLR Condition	**Stormwater System**	
		5-year storm	**5 to 100-year storm**
Initial Infrastructure Design	**Current Tide Condition Mean sea level: 3.29-feet NAVD 88 (Determined in 2009 Coastal Flooding Study)**	Flow in Pipes Design Storm: 5-year event Design Tide: Current 100-year high tide Minimum Freeboard (Streets): 2.67-feet Minimum Freeboard (parks/open space): Ponding allowed	Overland Flow Design Storm: 5 to 100-year event Design Tide: Current 100-year high tide Minimum Freeboard (Streets): Allowed to flow within street, 6-inch of ponding depth Minimum Freeboard (parks/open space): Ponding allowed
Infrastructure Adjustments for Future SLR	**SLR Condition: up to 16-inches Mean sea level: 3.29-feet + 16-inches = 4.62-feet NAVD 88 (Estimated to occur by 2050)**	***Adaptive Management Strategy: reduce freeboard allowance***	***Adaptive Management Strategy: reduce freeboard allowance***
		Flow in Pipes Design Storm: 5-year event Design Tide: Current 100-year high tide + SLR (16-inches)=10.53 NAVD 88 Minimum Freeboard (Streets): 16-inches Minimum Freeboard (parks/open space): Ponding allowed	Overland Flow Design Storm: 5 to 100-year event Design Tide: Current 100-year high tide + SLR (16-inches)=10.53 NAVD 88 Minimum Freeboard (Streets): Allowed to flow in street, 6-inches of ponding depth Minimum Freeboard (parks/open space): Ponding allowed
	SLR Condition: 16-inches to 36-inches Mean sea level: 3.29-feet + 36-inches = 6.29-feet NAVD 88 (Estimated to occur between 2050 and 2100.)	***Adaptive Management Strategy: When SLR Monitoring Report (Section 5.5.2) determines 16-inches of SLR has occurred implement modifications to storm drainage system.***	***Adaptive Management Strategy: When SLR Monitoring Report (Section 5.5.2) determines 16-inches of SLR has occurred implement modifications to storm drainage system.***
		Flow in Pipes Design Storm: 5-year event Design Tide: 100-year high tide at that time + SLR (guidance at that time) Minimum Freeboard (streets): 2.67-feet Minimum Freeboard (parks/open space): Ponding allowed	Overland Flow Design Storm: 5 to 100-year event Design Tide: 100-year high tide at that time + SLR (guidance at that time) Minimum Freeboard (streets): Allowed to flow in street, 6-inches of ponding depth Minimum Freeboard (parks/open space): Ponding allowed
	SLR Condition: greater than 36-inches	***Adaptive Management Strategy: When SLR Monitoring Report (Section 5.5.2) determines 16-inches of SLR has occurred .***	***Adaptive Management Strategy: When SLR Monitoring Report (Section 5.5.2) determines 16-inches of SLR has occurred implement modifications to storm drainage system.***
	Mean sea level: 3.29-feet + 36-inches = 6.29-feet NAVD 88 (Estimated to occur after 2100.)	Flow in Pipes Design Storm: 5-year event Design Tide: 100-year high tide at that time + SLR (guidance at that time) Minimum Freeboard (streets): 2.67-feet Minimum Freeboard (parks/open space): Ponding allowed	Overland Flow Design Storm: 5 to 100-year event Design Tide: 100-year high tide at that time + SLR (guidance at that time) Minimum Freeboard (streets): Allowed to flow in street, 6-inches of ponding depth Minimum Freeboard (parks/open space): Ponding allowed

Note: SLR conditions based on current Treasure Island mean sea level 3.29 feet (NAVD 88) documented in the 2009 Coastal Flooding Study

12.3 Proposed Stormwater Treatment System

The project treatment BMPs described below will be designed to comply with the San Francisco Stormwater Design Guidelines. Upon review, the SFPUC may accept either a volume-based or acceptable flow-based calculation method to provide compliance with the Stormwater Design Guidelines.

In addition, the Developer will coordinate with the SFPUC and prepare an evaluation of the need for diverting stormwater first flush volumes to the sewer system for review and approval by the SFPUC prior to the approval of the first Major Phase application.

Figure 12.4 shows the different approximate water shed areas for Treasure Island. A description of the stormwater treatment for each of the watershed is as follows:

12.3.1 Treasure Island Stormwater Treatment Areas

Watershed Area A & B

These watershed areas will utilize outfall structures into Clipper Cove to discharge runoff. These areas will utilize Low Impact Development (LID) type measures for the treatment of runoff. BMPs in this area could include such things as:

- Bioretention Planters
- Street Planters
- Swales
- Subgrade Infiltration Areas
- Permeable Paving

The development parcels within this watershed area will be responsible for treating their storm water runoff prior to discharging their runoff into the public stormwater system.

Watershed Area C & D

These watershed areas will utilize outfall structures located along the western shoreline to discharge runoff. The combined treatment areas for these watersheds will be located within the City Side Park prior to the outfall. The treatment flows from these watershed areas will be split off from the larger flows near the outfall and pumped up to the treatment area. Stormwater treatment BMPs will be integrated with

the park design to ensure aesthetic and programmatic consistency. The BMPs in the City Side Park could include:

- Bio-retention Planters
- Street Planters
- Raingardens
- Swales

The stormwater runoff from the public streets within these watershed areas will be pre-treated with bio-retention/infiltration planters or bio-swales within the landscape strips along the roadway section. The street flows will then be treated again in the combined treatment area.

The development parcels within these watershed areas will not be required to pre-treat their storm water runoff prior to discharging to the public stormwater system.

Watershed Area D2

This watershed area will utilize an outfall structure located along northwestern shoreline to discharge runoff. The combined treatment area for this watershed will be located in the northwestern open space area. Stormwater treatment BMPs will be integrated with the park design to ensure aesthetic and programmatic consistency. The treatment flow from this watershed will be split off from the larger flows near the outfall and pumped up to the treatment area. The BMPs could include:

- Bio-retention Planters
- Street Planters
- Seasonal Wetland
- Swales

The stormwater runoff from the public streets within this watershed area will be pre-treated with bio-retention/infiltration planters or bio-swales within the landscape strips along the roadway section. The street flows will then be treated again in the combined treatment area.

The development parcels within this watershed area will not be required to pre-treat their storm water runoff prior to discharging to the public stormwater system.

Watershed Area E

The Authority will construct, own and maintain a seasonal and/or perennial stormwater treatment wetland system shall be located in the open space area west of the WWTF. The stormwater treatment wetland shall be integrated with both the Wilds area (refer to Open Space plan) and the WWTF layout. The wetland shall be 10-15 acres in size. The wetlands shall include retention and flow control structures as required to regulate stormwater flows and ensure slope stability and erosion control. Watershed Area E will utilize outfall structures into the wetland area. The wetland area will then discharge through an outfall located along the eastern shoreline near the WWTF. The wetland area will be designed to meet regulated treatment standards for the runoff prior to discharging to the Bay. The wetland area will include seasonal and/or perennial stormwater treatment areas.

The stormwater runoff from the public streets within this watershed area will be pre-treated with bio-retention/infiltration planters or bio-swales within the landscape strips along the roadway section. The street flows will then be treated again in the combined treatment area.

The development parcels within this watershed area will not be required to pre-treat their storm water runoff prior to discharging to the public stormwater system.

Watershed Area E2

The SFPUC will be responsible for the construction of the WWTF in this watershed area. The WWTF area will utilize an outfall structure into the wetland area or an outfall along the eastern shoreline. Portions of treatment flows may be directed to the wetland area for treatment. The other areas will emphasize Low Impact Development (LID) type measures for the treatment of runoff. BMPs in this area will be selected by the SFPUC as part of the design of the treatment facility. The stormwater treatment wetland will be constructed by the Developer.

Watershed Area F

This watershed area will utilize outfall structures along the eastern shoreline or the wetland area. The urban farm and sports fields have been identified as specific treatment areas to address specific pollutants of concern associated with

garden/farming activities and field maintenance. Appropriate BMPs will be incorporated within these areas to address these concerns.

Watershed Area G & H

Watershed H will be combined with G and will utilize an outfall structure located along eastern shoreline to discharge runoff. The combined treatment area for these watersheds will be located along the northern edge of Watershed G near the recreation

fields. The treatment flow from these watersheds will be split off from the larger flows near the outfall and pumped up to the treatment area. Stormwater treatment BMPs will be integrated with the park design to ensure aesthetic and programmatic consistency. The BMPs could include:

- Bio-retention Planters
- Street Planters
- Swales

The stormwater runoff from the public streets within these watershed areas will be pre-treated with bio-retention/infiltration planters or bio-swales within the landscape strips along the roadway section. The street flows will then be treated again in the combined treatment area.

The development parcels within these watershed areas will not be required to pre-treat their storm water runoff prior to discharging to the public stormwater system.

Existing School Site

As a distinct use with ample open space adjacent to buildings this area will be treated as a discrete treatment area. BMPs will be selected with an emphasis on ecological and educational opportunities associated with the green schoolyard concept. Selected BMPs may include Bioretention/Infiltration Planters, Raingardens, Swales, Subgrade Infiltration Areas and/or Permeable Paving. The outfall for the school site will be directed towards the wetland area.

Centralized Treatment Areas

Many of the watershed areas included centralized treatment areas where a single treatment feature treats stormwater from the entire watershed including private parcels and TIDA controlled property. Private vertical development and TIDA controlled property will not be required to implement any stormwater treatment measures on their parcels if the stormwater treatment is provided in designated off-parcel, centralized treatment areas as approved by the SFPUC. Stormwater Control Plans will be submitted as per the DRDAP.

12.3.2 Yerba Buena Stormwater Treatment Areas

Watershed Area Y1

This watershed area will utilize an outfall located near the intersection of Macalla Road and Treasure Island Road. The treatment areas for this watershed will be a combination of areas along Macalla Road. The treatment flow from this watershed will be split off from the larger flows and directed to the treatment areas with gravity diversion structures where possible or with pump stations prior to the outfall. Stormwater treatment BMPs will be integrated with the YBI Habitat Plan and open space design. The BMPs could include:

- Bio-retention/Infiltration Planters
- Raingardens
- Swales

The development parcels within these watershed areas will not be required to pre-treat their storm water runoff prior to discharging to the public stormwater system.

Watershed Area Y2

This watershed area will utilize an outfall located on the northern shoreline of YBI at the lower elevations below the Great White historic buildings. The treatment area for this watershed will be located in the open space area below the Great Whites. The treatment flow from this watershed will be split off from the larger flows and directed to the treatment areas with gravity diversion structures where possible or with pump stations prior to the outfall. Stormwater treatment BMPs will be integrated with the YBI Habitat Plan and open space design. The BMPs could include:

- Bio-retention/Infiltration Planters,
- Raingardens
- Swales

The development parcels within these watershed areas will not be required to pre-treat their storm water runoff prior to discharging to the public stormwater system.

Centralized Treatment Areas

Many of the watershed areas included centralized treatment areas where a single treatment feature treats stormwater from the entire watershed including private parcels and TIDA controlled property. Private vertical development and TIDA controlled property will not be required to implement any stormwater treatment measures on their parcels if the stormwater treatment is provided in designated off-parcel, centralized treatment areas as approved by the SFPUC. Stormwater Control Plans will be submitted as per the DRDAP.

Typical treatment cross sections for the street planters and bio-retention planters are shown on Figure 12.5. These BMPs will be designed to meet the stormwater control requirements of the Stormwater Design Guidelines at all times during the treatment storm at Mean Higher High Water (MHHW) conditions, with 16-inches of SLR. Stormwater treatment BMPs required to meet the Stormwater Design Guidelines shall be designed such that the system hydraulic grade line during the treatment storm, at MHHW (6.22 NAVD 88) conditions, with 16-inches of SLR shall have a 6-inch clearance below the bottom of the treatment and/or storage zones, unless approved by the SFPUC on a case-by-case scenario. The final sizing and elevations of the stormwater treatment devices will be developed in coordination with the SFPUC prior to approval of the Major Phase and Sub Phase applications and will meet the San Francisco Stormwater Design Guidelines treatment requirements.

Maintenance of the Stormwater Management Controls for Treasure Island / Yerba Buena Island Development Project will be as follows:

Homeowners Association or TIDA: The development homeowners association or TIDA will maintain all Stormwater Management Controls required to meet SFPUC stormwater management

requirements to treat runoff from private development (buildings, courtyards, parks and open space, private alleys, etc.) or TIDA controlled property (TIDA owned trust streets, TIDA owned facilities, etc.) as defined within the property legal descriptions. At no time will this runoff discharge to stormwater management controls located within the public right of way. This maintenance obligation includes all necessary stormwater lift stations and other ancillary infrastructure required for the Stormwater Management Controls to properly function.

SFPUC or other City Agency: The SFPUC or other City Agency will be responsible for maintenance of Stormwater Management Controls within the public right of way designed to only treat runoff from the public right of way. This maintenance obligation includes all infrastructure required for the Stormwater Management Controls located in the public right-of-way to properly function.

"Stormwater Management Controls" means the facilities, both those to remain privately-owned and those to be dedicated to the City, that comprise the infrastructure and landscape system that is intended to manage the stormwater runoff associated with the Project, as required by the San Francisco stormwater management standards, the applicable NPDES permit, and/or state and federal law, and as described in this Infrastructure Plan. Stormwater Management Controls include but are not limited to: (i) swales and bio-swales (including plants and soils), (ii) bio-retention and bio-filtration systems (including plants and soils), (iii) constructed ponds and/or wetlands (vi) permeable paving systems, and (v) other facilities performing a stormwater control function constructed to comply with the San Francisco stormwater management standards, the applicable NPDES permit, and/or state and federal law. Stormwater Management Controls shall not mean Infrastructure that is part of the traditional collection system such as catch basins, stormwater pipes, stormwater pump stations, outfalls, etc, that are located in the public right-of-way.

12.4 Coast Guard and Job Corps

The Developer will not replace the stormwater facilities within the Coast Guard and Job Corps properties.

The Coast Guard facility is a separate system on YBI and no connections to the new system are required.

The existing Job Corps stormwater system crosses their property line at several locations along their western and southern property line and connects to the existing TI system. The Project will coordinate with the Job Corps and re-connect their system at one location on Avenue C. The Project

will then provide one of the following two alternatives for connecting the Job Corps stormwater system to the existing outfall along the western shoreline that currently serves the Job Corps site:

1. Install a new gravity line from the Job Corps connection point on Avenue C to the existing outfall. The gravity line would be sized to match the existing drainage conditions on the Job Corps campus.
2. Install a new pump station at the connection point and provide a dedicated force main to the existing outfall. The pump station and force main would be designed to match the existing drainage conditions on the Job Corps campus.

No improvements to the existing outfall are proposed and the Job Corps will be responsible for any required storm water treatment on their site.

12.5 Phases for Stormwater System Construction

The Developer will design and install the new stormwater collection and treatment systems to match the Sub-Phases of the Project. The amount of the existing system replaced with each Sub-Phase will be the minimum necessary to serve the Sub-Phase. The existing land areas on Treasure Island will continue to utilize the existing stormwater collection system with interim connections to the new system where required to maintain the existing service until the existing areas are demolished. The existing stormwater pump/lift stations will continue to be used for the existing land areas to remain during the initial Sub-Phases of the Project. The existing pump/lift stations located within each Sub-Phase will be removed or replaced with that Sub-Phase. Repairs and/or replacement of the existing facilities necessary to serve the sub-phase will be designed and constructed by the Developer.

Subject to negotiating a separate utilities interim operations memorandum of understanding between the Authority and the SFPUC, either the Authority or the SFPUC will be responsible for maintenance of existing collection facilities until replaced by the Developer. Once construction of

the Sub-Phase or new collection/treatment facilities are complete and accepted by the SFPUC, the SFPUC will be responsible for the new public stormwater collection system, including pump stations, located in public right of way areas. The Authority will be responsible for the stormwater treatment facilities in public areas. Private stormwater systems, including pump stations and treatment areas, located on private property will be maintained by the property owner.

The Developer will provide an existing conditions report for the existing stormwater system scheduled to remain adjacent to the Sub-Phase prior to the geotechnical mitigation activity. The report will include the conditions of the original system on TI as well as the new system constructed with previous phases adjacent to the new Phase. The report will be updated at the end of the

geotechnical mitigation activity and again at the end of the construction of the Sub-Phase. The limit of the report and how the conditions of the systems are determined will be coordinated with the SFPUC. The Developer will be responsible for damage to the original stormwater system, and/or newly installed stormwater mains on previous phases, due to geotechnical mitigation activity and/or construction of the proposed improvements. The Developer will make the necessary repairs as required and be responsible for any permit violations due to the damage.

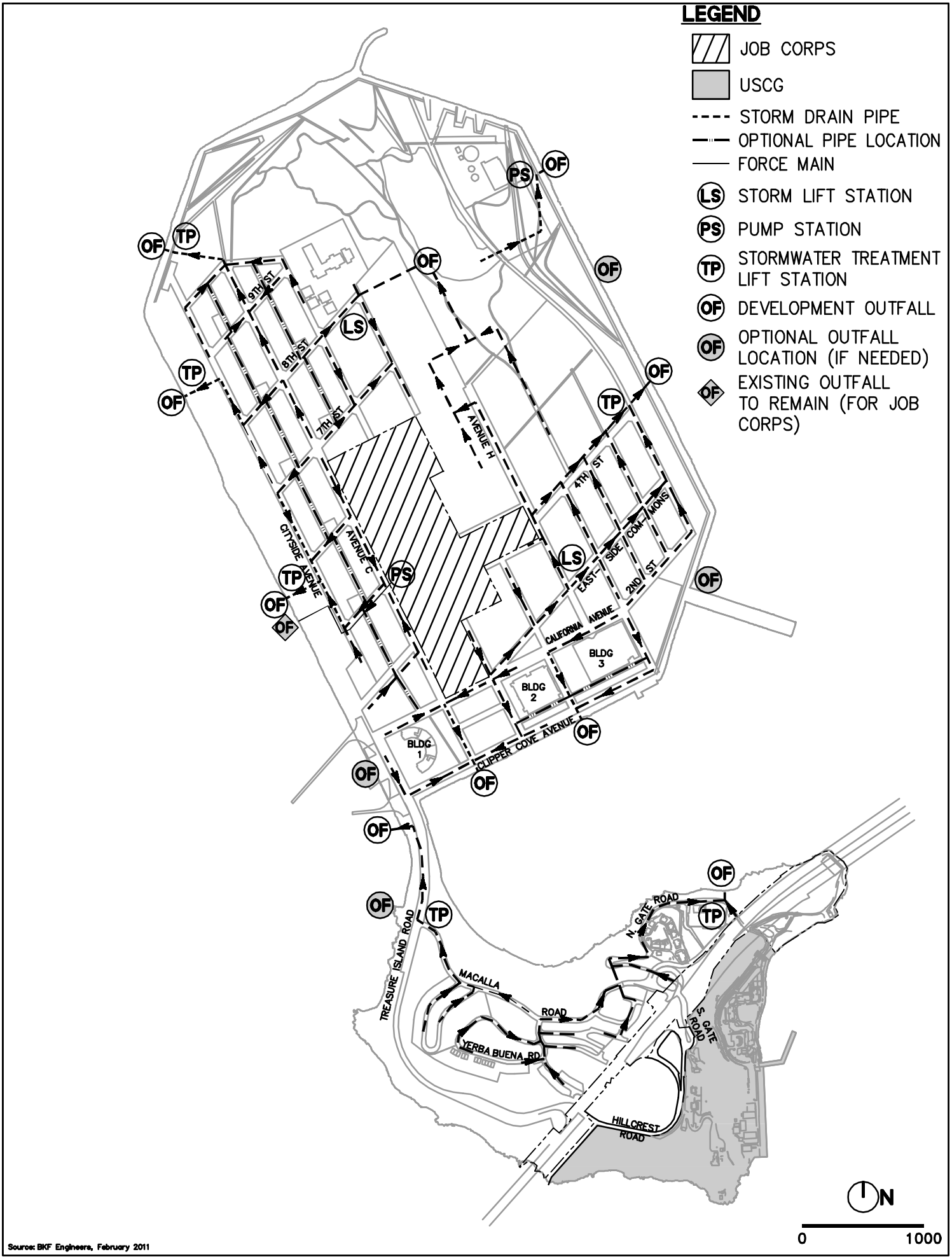

Source: BKF Engineers, February 2011

Treasure Island Infrastructure Plan **Figure 12.1: Proposed Stormwater Collection System**

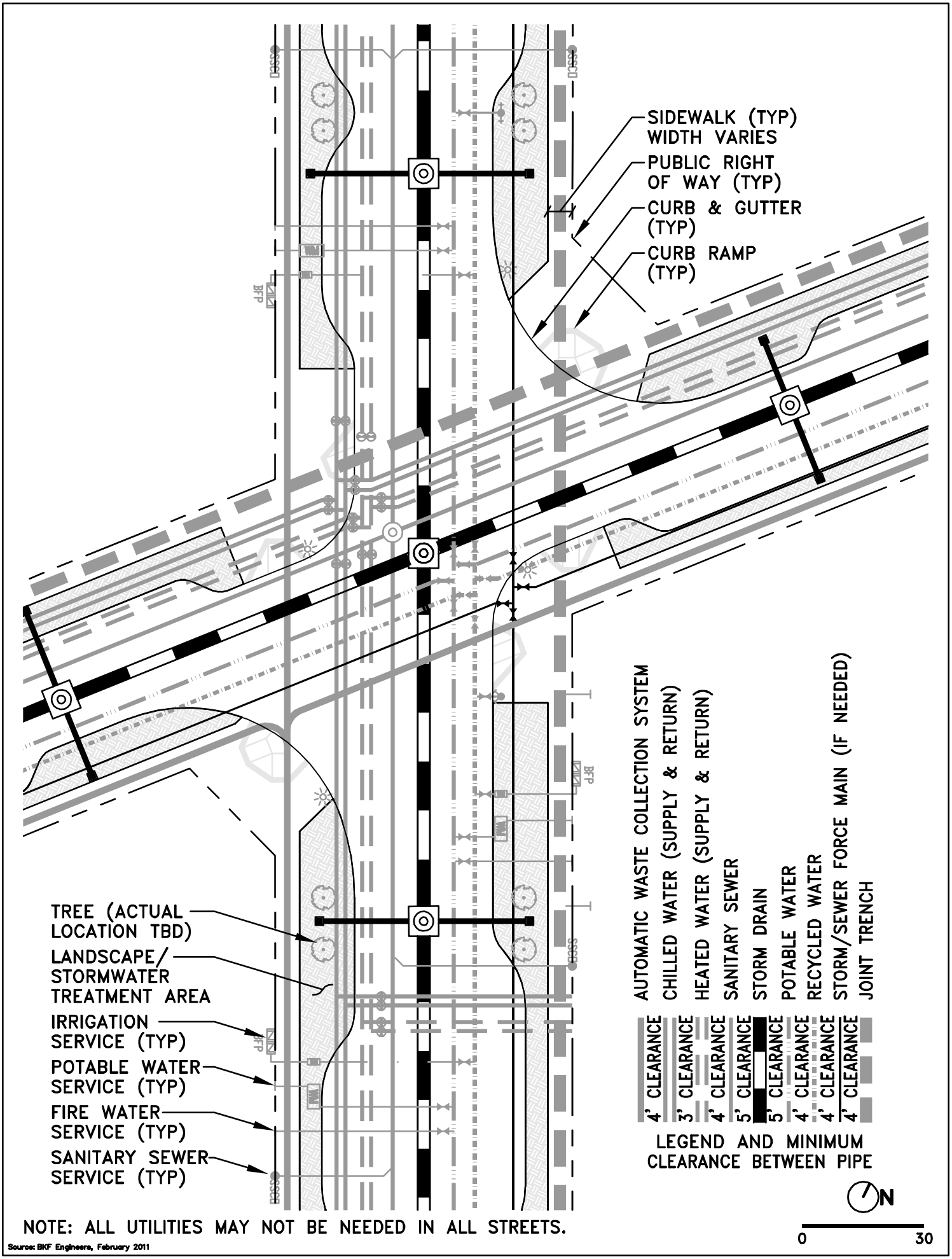

NOTE: ALL UTILITIES MAY NOT BE NEEDED IN ALL STREETS.

Source: BKF Engineers, February 2011

Figure 12.2.1: Detail of Stormwater Collection System Location in Streets

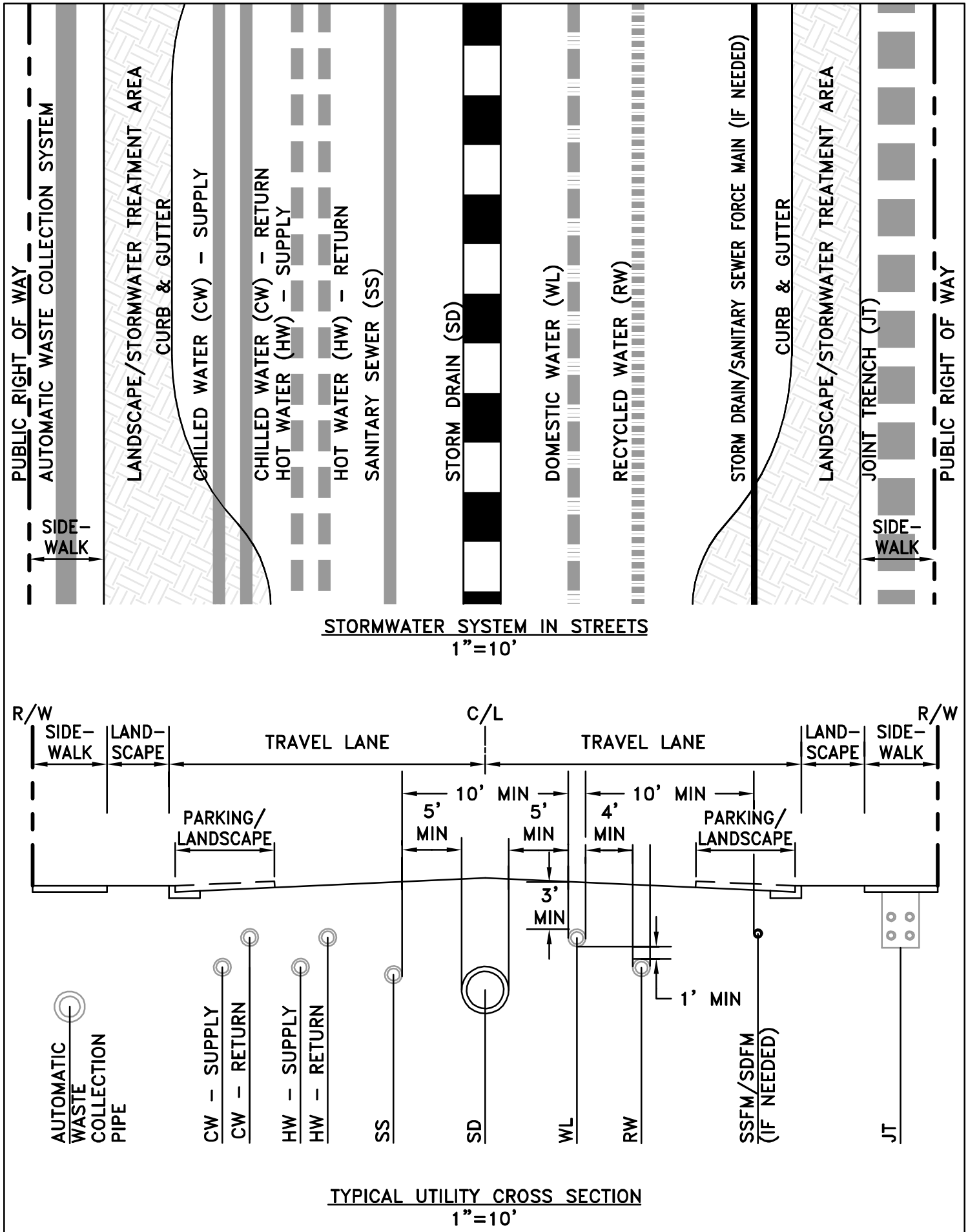

Source: BKF Engineers, February 2011

Figure 12.2.2: Detail of Stormwater Collection System in Streets

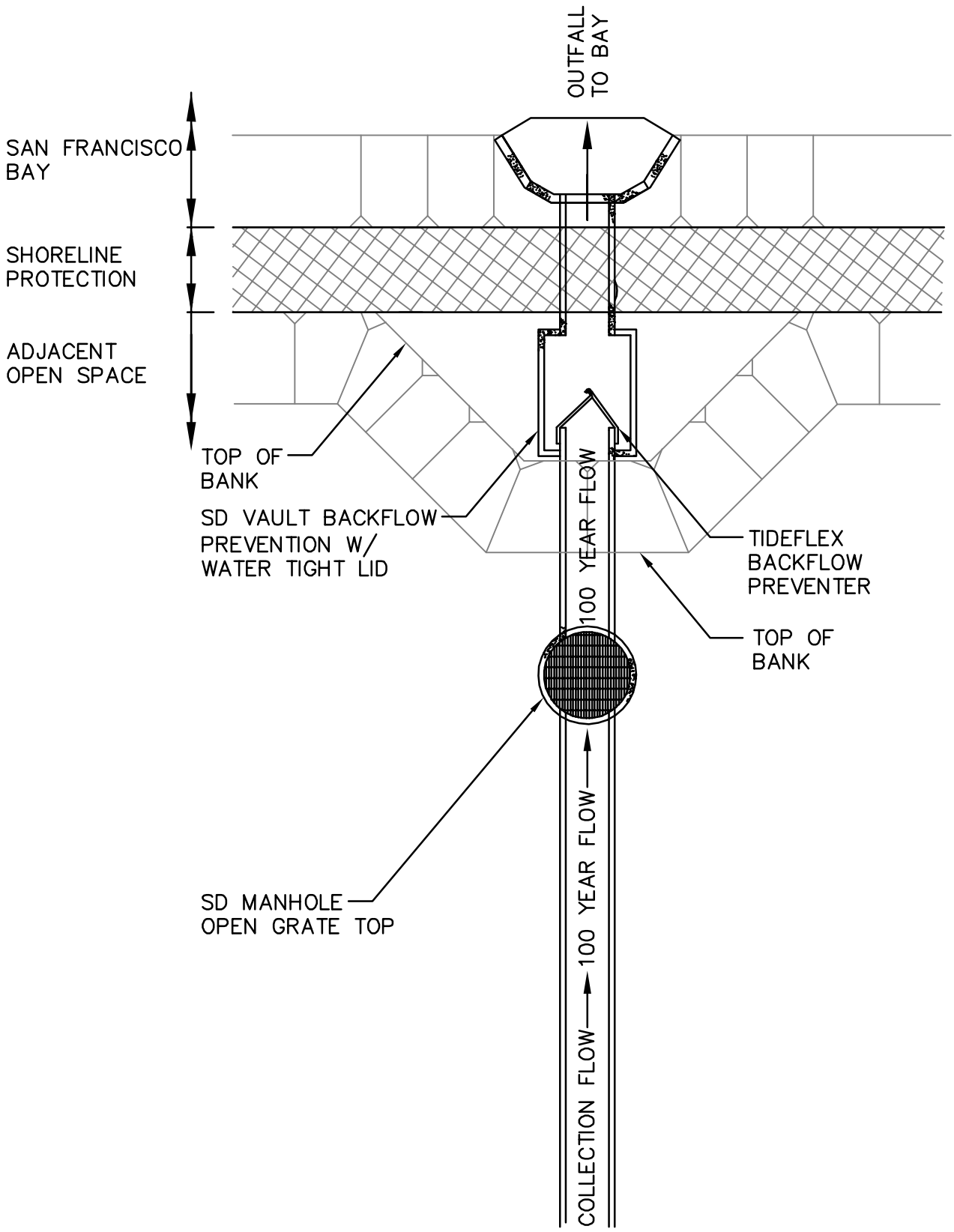

STORM DRAIN OUTFALL AT CONSTRUCTION

NOT TO SCALE

Source: BKF Engineers, 2010

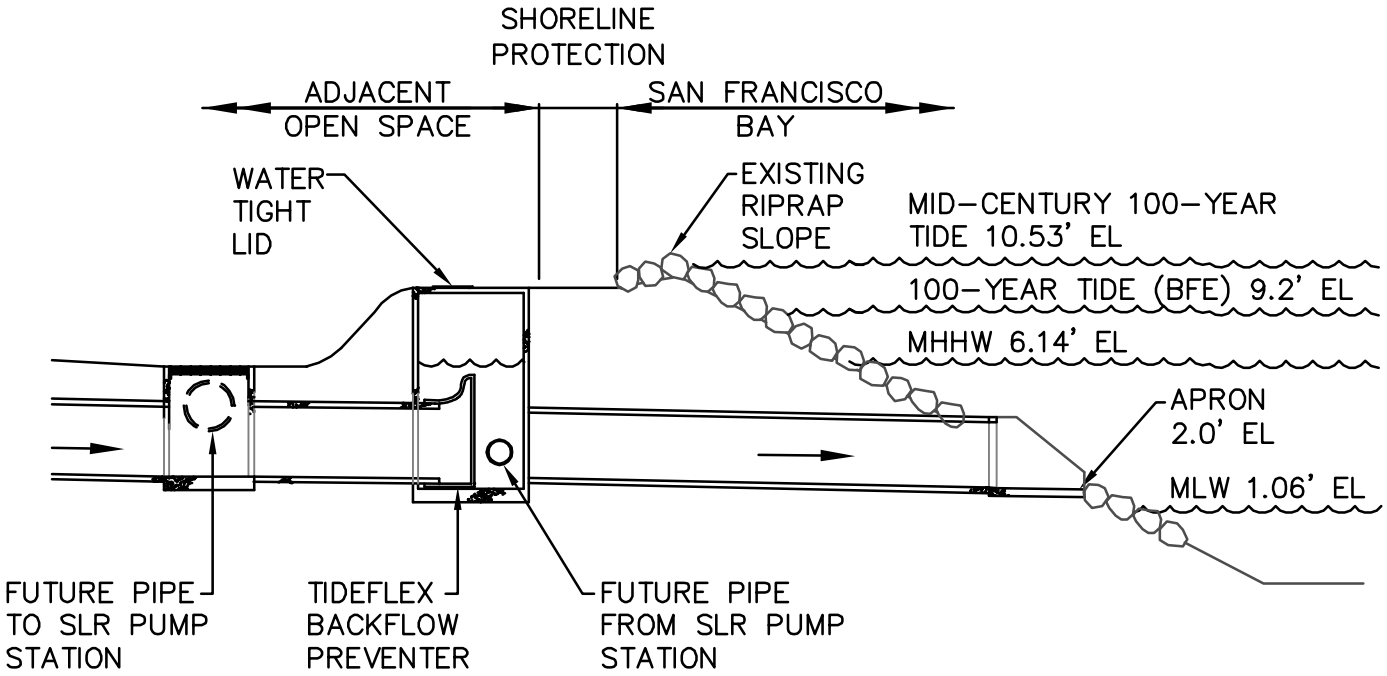

STORM DRAIN OUTFALL – SECTION

NOT TO SCALE

PROJECTED TIDE ELEVATIONS WITH SEA LEVEL RISE

TIDE BENCHMARK	SLR	100-YR	MLW	MHHW
CURRENT	–	9.20'	1.06'	6.14'
MID-CENTURY (~2050)	16"	10.53'	2.39'	7.47'
3/4 CENTURY (~2075)	36"	12.20'	4.06'	9.14'
END CENTURY (~2100)	55"	13.78'	5.64'	10.72'

Source: BKF Engineers, February 2011

Figure 12.3.2: Conceptual Outfall Structure

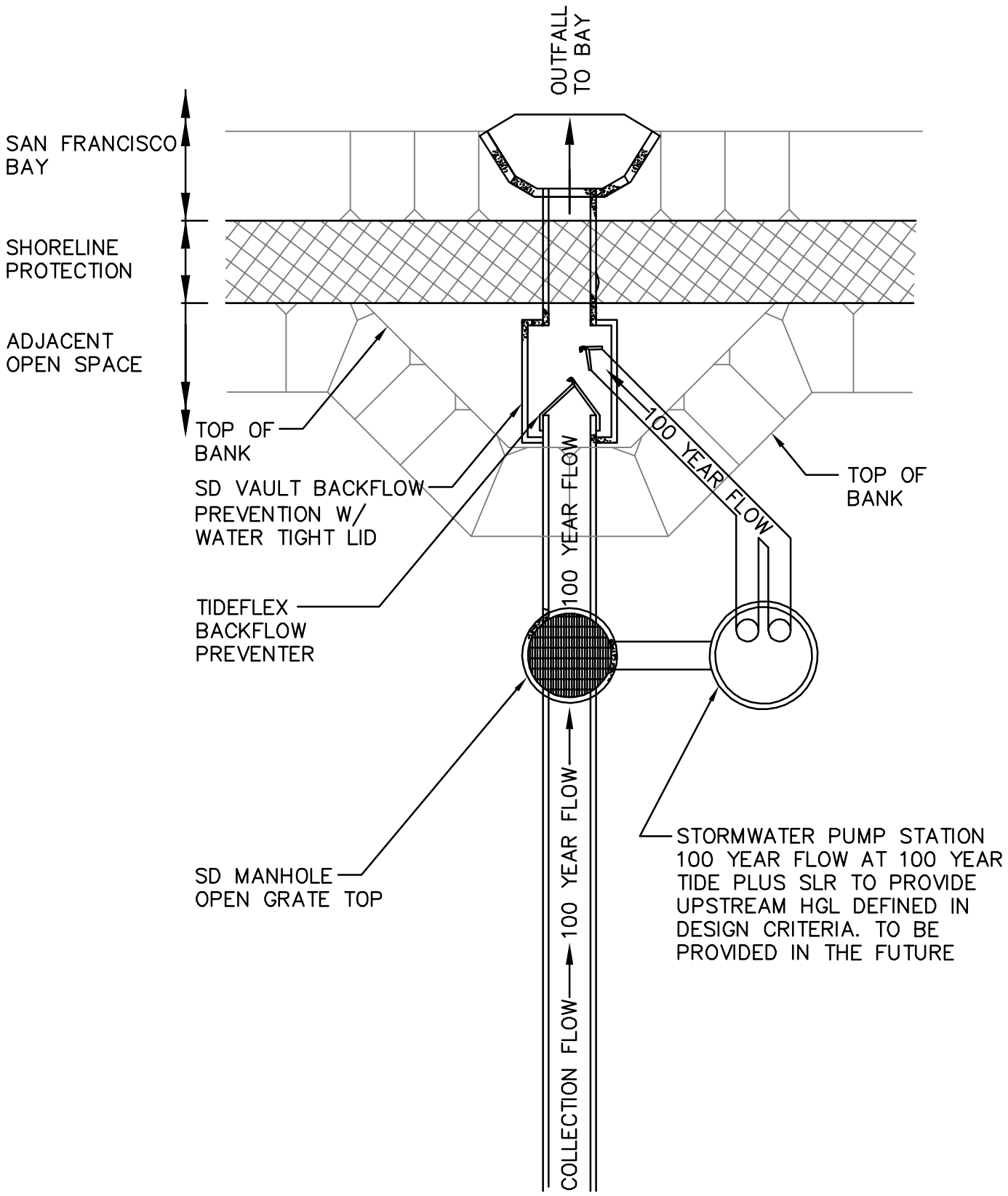

STORM DRAIN OUTFALL WITH SLR

NOT TO SCALE

Source: BKF Engineers, 2010

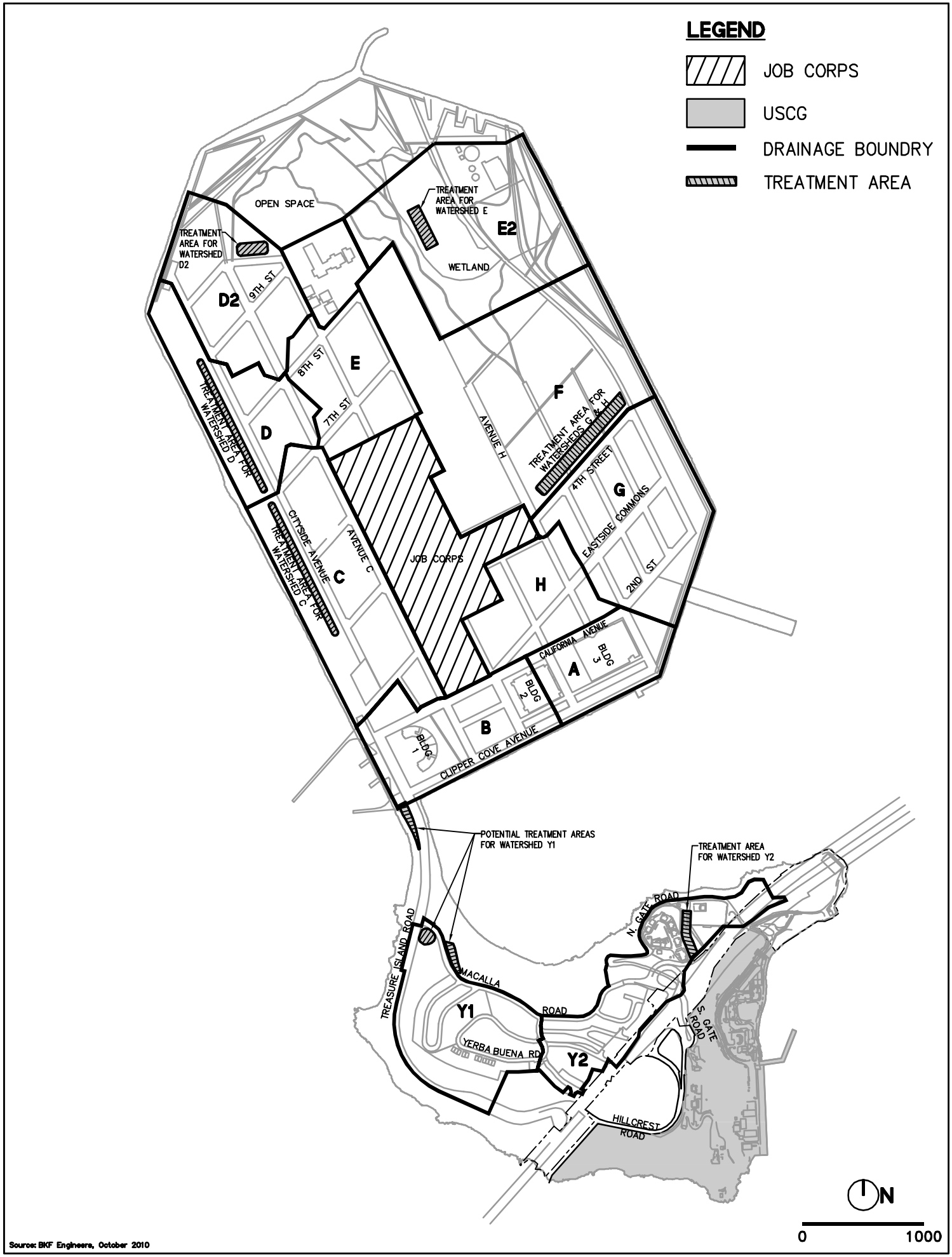

Source: BKF Engineers, October 2010

Figure 12.4: Watershed and Treatment Areas

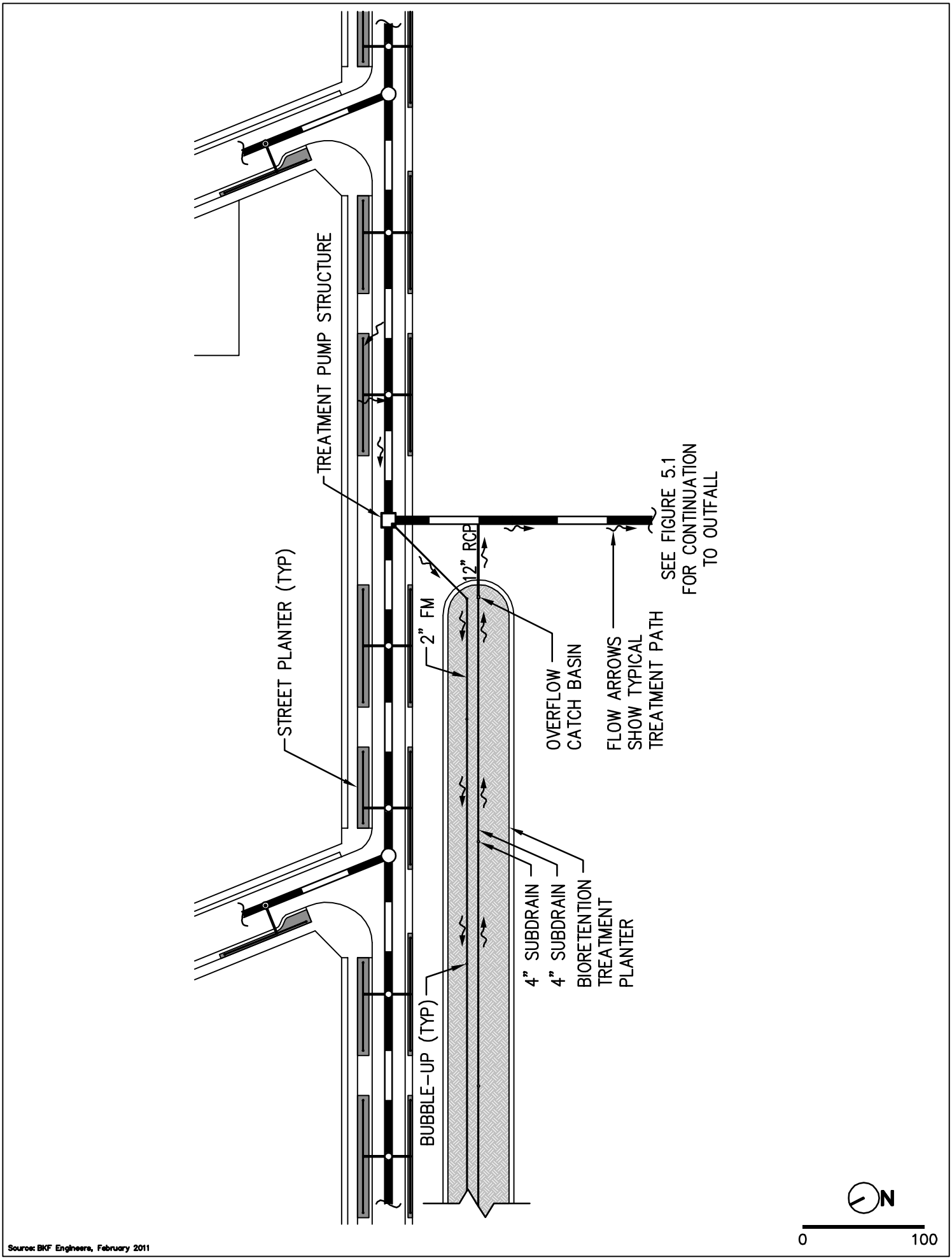

Source: BKF Engineers, February 2011

Figure 12.5.1: Typical Stormwater Path

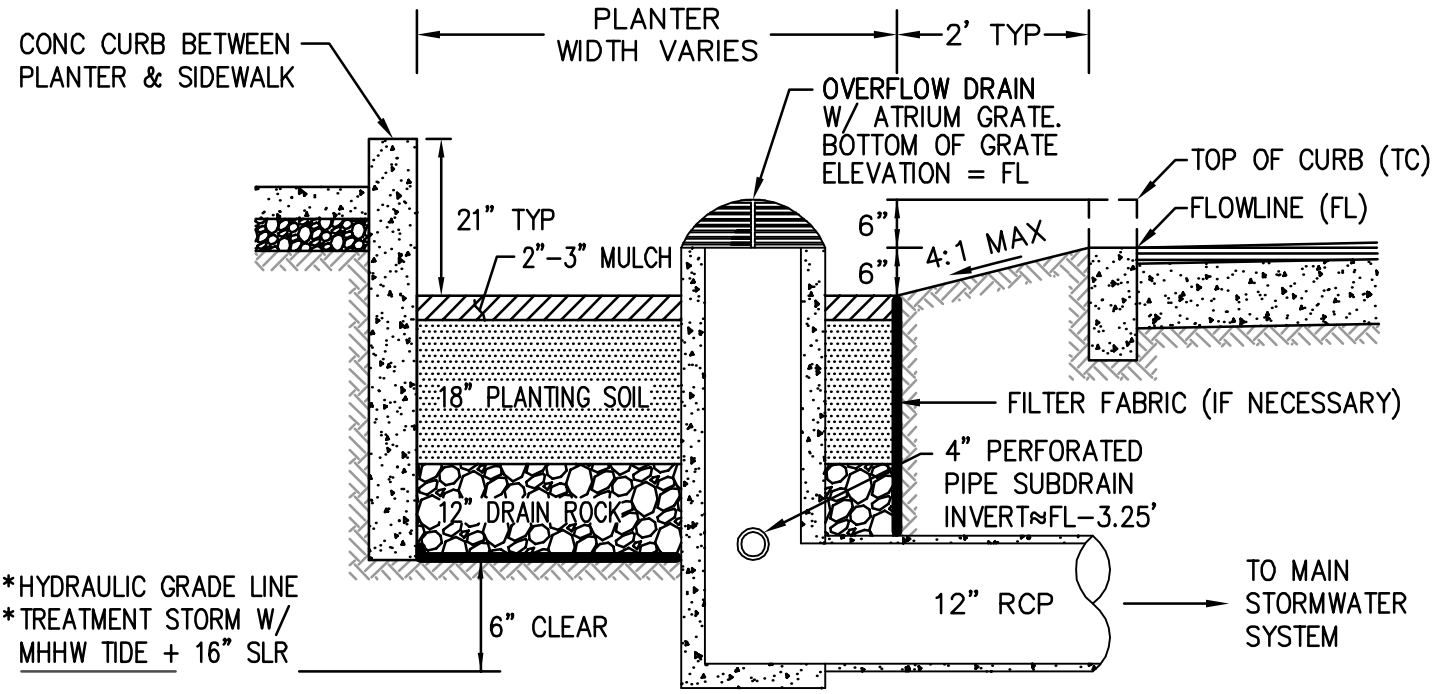

*INDICATES THE HYDRAULIC GRADE LINE (HGL) OF THE STORM EVENT AND TIDE CONDITION (STORM EVENT/TIDE CONDITION) ASSUMING PLANTER LOCATED AT MOST UPSTREAM DRAINAGE STRUCTURE AND FL = 12.0 (NAVD 88).

TYPICAL STREET PLANTER

NOT TO SCALE

Source: BKF Engineers, February 2011

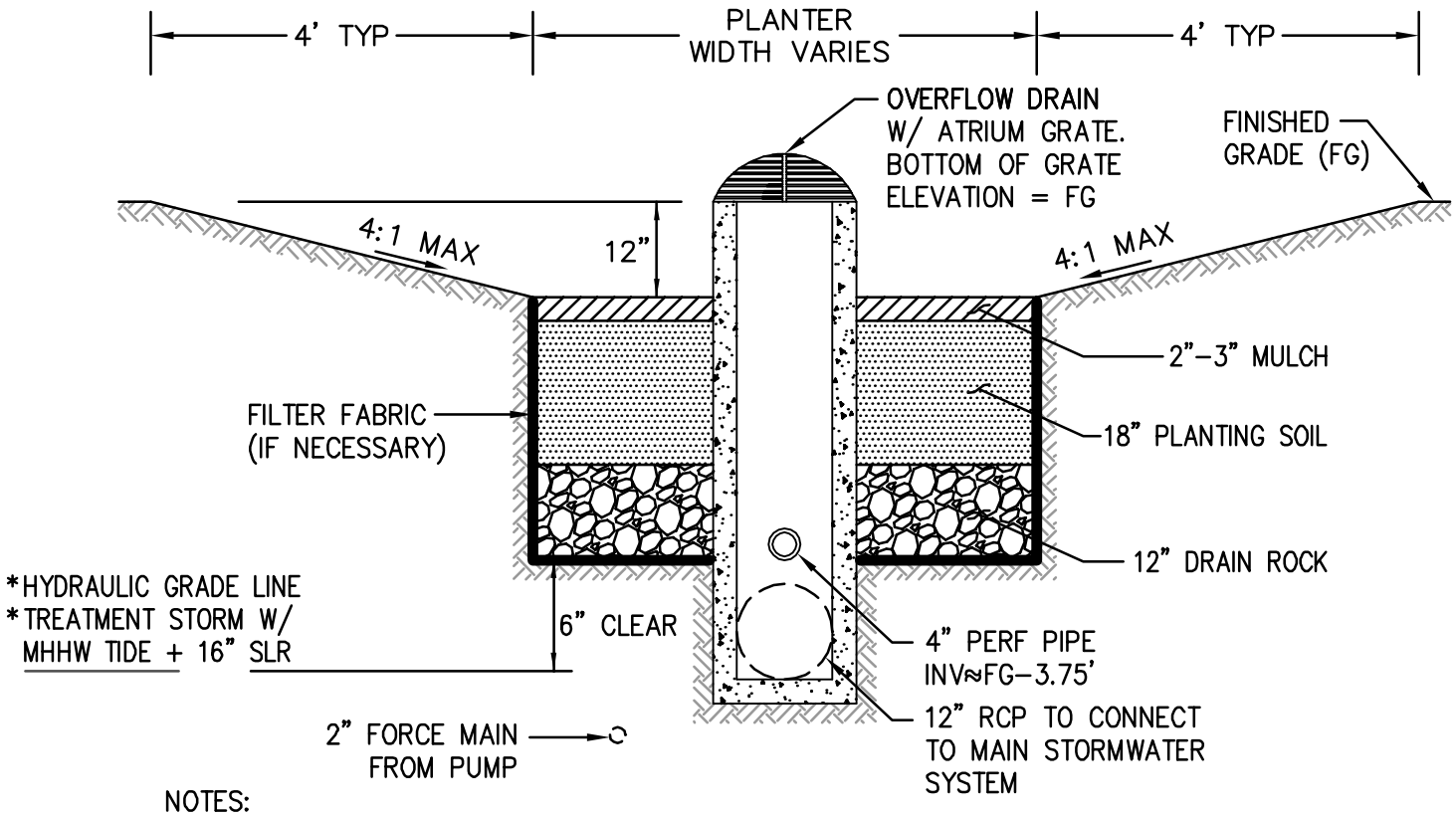

NOTES:

1. *INDICATES THE HYDRAULIC GRADE LINE (HGL) OF THE STORM EVENT AND TIDE CONDITION (STORM EVENT/TIDE CONDITION) ASSUMING PLANTER LOCATED IN SHORELINE PARK JUST UPSTREAM OF TIDEFLEX STRUCTURE AND FG = 12.0 (NAVD 88).

TYPICAL BIORETENTION TREATMENT PLANTER

NOT TO SCALE

Source: BKF Engineers, February 2011

Figure 12.5.3: Typical Bioretention Treatment Planter

13. DRY UTILITY SYSTEMS

Dry utilities on Treasure Island include electrical, natural gas, cable TV and telecommunications services.

13.1 Electrical System

13.1.1 Existing Electrical Service to Treasure Island

TIDA, or the Power Provider will own, operate, and maintain the existing electrical system once the Navy transfer is complete. They will be responsible for updating/executing/maintaining all related agreements for the continued electrical service to Treasure Island.

13.1.2 Existing Electrical System on Treasure Island

The existing submarine cables from Oakland land on TI near the end of 3rd Street. These lines connect to a series of existing 15kV switches located within Building 3. The existing switches provide sectionalizing capability to various parts of the Island. The existing distribution system on Treasure Island is a mix of underground cables and overhead lines. The rated capacities of the existing systems on Treasure Island are unknown. YBI is served by an existing 12 kV submarine cable running from Treasure Island to Yerba Buena Island under Clipper Cove.

To provide redundant power in case of emergency, the SFPUC owns two portable, diesel-fueled 2 MW generators that serve Treasure Island. The generators are kept outside of Building 3 and connect to the main 12 kV switchgear at TI. In the event of a power outage from an off-Island event, the power is manually switched to the portable generators. The portable generators are currently tested every other week. Each unit has a double-contained storage tank that holds approximately 2,100 gallons of diesel fuel that is adequate to run each generator at 70 percent load for about 20 hours.

13.1.3 Proposed Electrical System

13.1.3.1 Proposed Electrical Demand

The Project's estimated electrical peak demand is 11.4 MW and annual electrical energy consumption is 58,500 Megawatt-hours (MWh). This includes the proposed land uses, existing facilities to remain, infrastructure demands, and the WWTF.

13.1.3.1.1 Proposed Renewable Energy Generation

The Developer will provide 5 percent of peak electric demand with on-site renewable sources. The Project is anticipated to include photovoltaic panels to meet the goal. This would include the ability to provide roof-mounted photovoltaic systems on all buildings, including historic Buildings 1, 2, and 3.

13.1.3.2 Proposed Treasure Island Electrical Distribution System

The Developer will be responsible for the design and construction of the proposed electrical distribution system. The existing electrical distribution will be replaced in phases as the Project builds out. . The new system will be designed and constructed to PG&E standards. The on-island system will include new 15kV class switchgear (outdoor gear in a fenced enclosure) located near the southeast corner of the Project with bus and breakers for protection and sectionalizing load on the island. The submarine cables will be connected to this new switchgear through separate breakers, providing a redundant supply to the Island. The switchgear will include connection points for the two existing trailer mounted generators (to be relocated in close proximity to the switchgear yard) to provide additional redundancy. The distribution system throughout the Project will consist of a looped 600 amp, 12kV, main underground feeder system with fuses to protect radial and looped 200 amp circuits feeding transformers and service cables to residential and commercial developments. Distribution equipment will be installed subsurface or pad mounted as approved by the Power Provider. The existing 12kV submarine cable to YBI will remain and will be reused to provide service to the existing uses on YBI.

The new permanent electric distribution system will be underground in a joint or common trench which shall include gas, communication, and cable TV facilities as described below. The joint trench will also include electrical service for other infrastructure items such as street lights, traffic signals, and pump stations.

13.1.3.2.1 Location of Electrical Distribution System within New Streets

Figure 13.1 shows a conceptual layout of the joint trench system. Figure 13.2 shows the typical alignment of the joint trench system within the proposed streets.