MAP AND CONSTRUCTION PLAN

FOR

SAN FRANCISQUITO CREEK FLOOD REDUCTION, ECOSYSTEM RESTORATION, AND RECREATION PROJECT

SAN FRANCISCO BAY TO HIGHWAY 101

SAN FRANCISQUITO CREEK
JOINT POWERS AUTHORITY

Santa Clara Valley Water District

PREPARED BY:

HDR
HDR Engineering, Inc.

REGISTERED PROFESSIONAL ENGINEER
AMY GILLERAN
No. 63861
Exp. 9/30/14
CIVIL
STATE OF CALIFORNIA

AMY GILLERAN, P.E. DATE
PRINCIPAL ENGINEER

APPROVED BY:

MELANIE RICHARDSON, P.E. DATE
DEPUTY OPERATING OFFICER
WATERSHEDS CAPITAL DIVISION
SANTA CLARA VALLEY WATER DISTRICT

SAEID HOSSEINI, P.E. DATE
WEST AND GUADALUPE WATERSHEDS UNIT MANAGER
WATERSHEDS CAPITAL DIVISION
SANTA CLARA VALLEY WATER DISTRICT

ACCEPTED BY:

LEN MATERMAN DATE
EXECUTIVE DIRECTOR
SAN FRANCISQUITO CREEK JOINT POWERS AUTHORITY

CHRIS ELIAS DATE
DEPUTY OPERATING OFFICER
WEST AND GUADALUPE WATERSHEDS DIVISION
SANTA CLARA VALLEY WATER DISTRICT

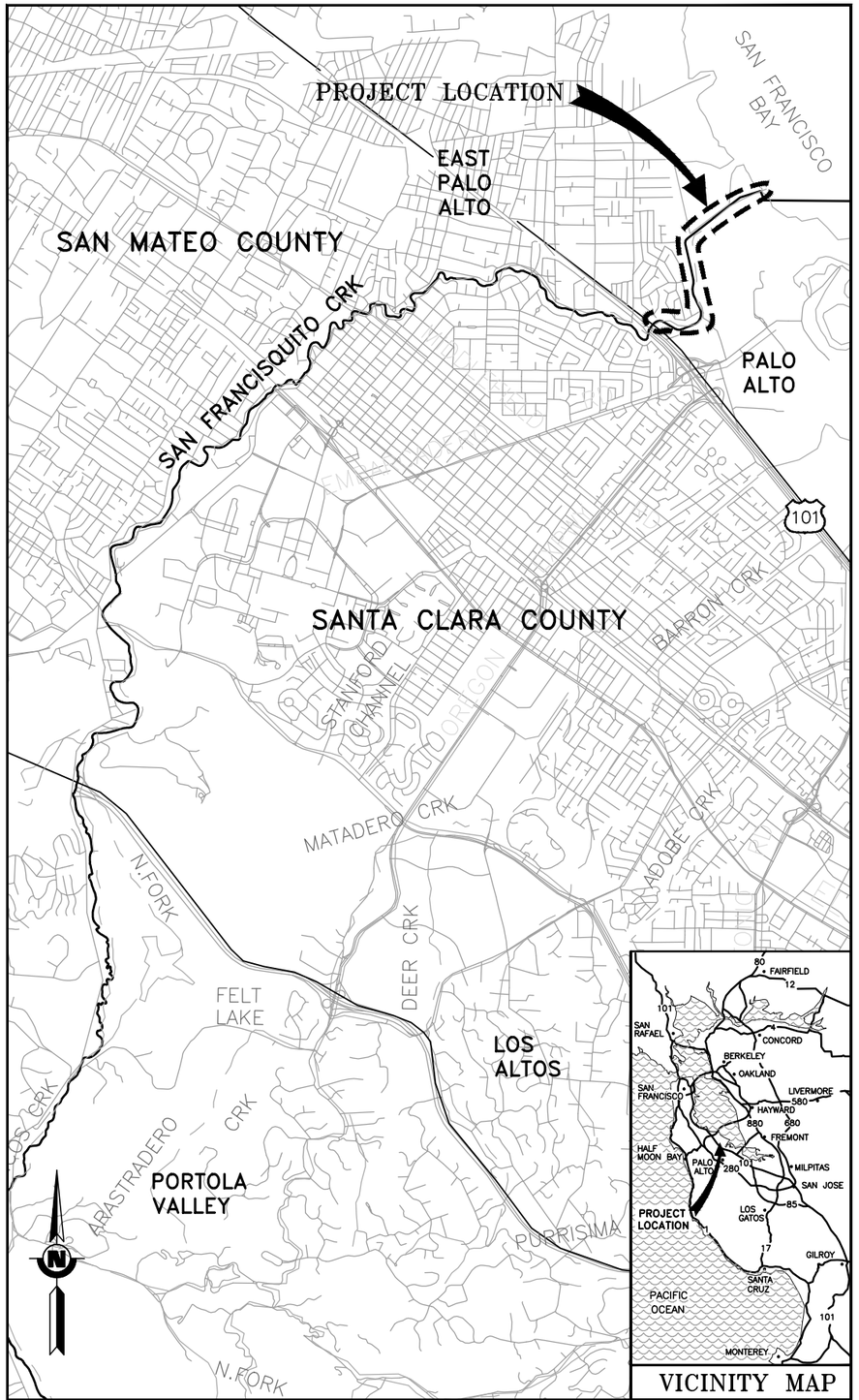

LOCATION MAP
SCALE: 1"=2,500'

DRAFT 100%
AUGUST 2014

PROJECT NUMBER
26284002
SHEET CODE:
G-1
SHEET NUMBER:
1 OF 119

DOCUMENT NUMBER: SFC_LP-G-1028-XXXXXXX

USERNAME: hsuarez Tue 02 Sep 2014 07:36pm
FILENAME: C:\pwworking\sac\d0173413\G-01

DRAWING INDEX

SHEET CODE	DESCRIPTION	PAGE NO.
	GENERAL	
G-1	LOCATION MAP AND TITLE SHEET	1 OF 119
G-2	DRAWING INDEX	2 OF 119
G-3	GENERAL SITE PLAN	3 OF 119
G-4	ABBREVIATIONS, LEGEND AND GENERAL NOTES	4 OF 119
G-5	UTILITY AND LOCAL AGENCY CONTACTS, GENERAL NOTES, AND BASIS OF DESIGN	5 OF 119
G-6	SURVEY CONTROL AND SETTLEMENT PLATE LOCATIONS	6 OF 119
G-7	SURVEY CONTROL AND SETTLEMENT PLATE LOCATIONS	7 OF 119
G-8	STAGING AREA AND ACCESS POINTS	8 OF 119
G-9	STAGING AREA AND ACCESS POINTS	9 OF 119
G-10	LEVEE ALIGNMENT RIGHT BANK & LEFT BANK LINE & CURVE PLAN	10 OF 119
G-11	LEVEE ALIGNMENT RIGHT BANK & LEFT BANK LINE & CURVE PLAN	11 OF 119
G-12	LEVEE ALIGNMENT RIGHT BANK & LEFT BANK LINE & CURVE TABLE	12 OF 119
G-13	SAN FRANCISQUITO CREEK (C-LINE) LINE AND CURVE TABLE	13 OF 119
G-14	LEVEE STATIONING AND SHEET LAYOUT PLAN	14 OF 119
	CIVIL	
C-1	PLAN AND PROFILE – (R-LINE) STA 0+00 TO 8+00	15 OF 119
C-2	PLAN AND PROFILE – (R-LINE) STA 8+00 TO 16+00	16 OF 119
C-3	PLAN AND PROFILE – (R-LINE) STA 16+00 TO 24+00	17 OF 119
C-4	PLAN AND PROFILE – (R-LINE) STA 24+00 TO 32+00	18 OF 119
C-5	PLAN AND PROFILE – (R-LINE) STA 32+00 TO 39+00	19 OF 119
C-6	PLAN AND PROFILE – (R-LINE) STA 39+00 TO 48+00	20 OF 119
C-7	PLAN AND PROFILE – (R-LINE) STA 48+00 TO 57+00	21 OF 119
C-8	PLAN AND PROFILE – (R-LINE) STA 57+00 TO 66+00	22 OF 119
C-9	PLAN AND PROFILE – (R-LINE) STA 66+00 TO 75+54	23 OF 119
C-10	PLAN AND PROFILE – (L-LINE) STA 6+00 TO 14+00	24 OF 119
C-11	PLAN AND PROFILE – (L-LINE) STA 14+00 TO 22+00	25 OF 119
C-12	PLAN AND PROFILE – (L-LINE) STA 22+00 TO 31+00	26 OF 119
C-13	PLAN AND PROFILE – (L-LINE) STA 31+00 TO 40+00	27 OF 119
C-14	PLAN AND PROFILE – (L-LINE) STA 40+00 TO 47+50	28 OF 119
C-15	PLAN AND PROFILE – (L-LINE) STA 47+50 TO 57+00	29 OF 119
C-16	PLAN AND PROFILE – (L-LINE) STA 57+00 TO 66+00	30 OF 119
C-17	PLAN AND PROFILE – (L-LINE) STA 66+00 TO 76+50	31 OF 119
C-18	PLAN AND PROFILE – RAMP 'A' AND RAMP 'B'	32 OF 119
C-19	PLAN AND PROFILE – RAMP 'C'	33 OF 119
C-20	PLAN AND PROFILE – FRIENDSHIP ISLAND GRADING PLAN – PEDESTRIAN RAMP	34 OF 119
C-21	PLAN AND PROFILE – LEFT BANK LEVEE – ACCESS RAMP	35 OF 119
C-22	PLAN AND PROFILE – INTERNATIONAL SCHOOL PEDESTRIAN RAMP	36 OF 119
C-23	PLAN – HAMMERHEAD TURNAROUND	37 OF 119
C-24	TYPICAL LEVEE SECTIONS – R-LINE	38 OF 119
C-25	TYPICAL LEVEE SECTIONS – R-LINE	39 OF 119
C-26	TYPICAL LEVEE SECTIONS – R-LINE	40 OF 119
C-27	TYPICAL LEVEE SECTIONS – R-LINE	41 OF 119
C-28	TYPICAL LEVEE SECTIONS – L-LINE	42 OF 119
C-29	TYPICAL LEVEE SECTIONS – L-LINE	43 OF 119
C-30	TYPICAL LEVEE SECTIONS – L-LINE	44 OF 119
C-31	TYPICAL LEVEE SECTIONS – L-LINE	45 OF 119
C-32	TYPICAL LEVEE SECTIONS – L-LINE	46 OF 119
C-33	TYPICAL SECTIONS	47 OF 119
C-34	TYPICAL SECTION –ROCK SLOPE PROTECTION DETAIL – FOLDABLE BOLLARD	48 OF 119
C-35	DETAILS – FENCE	49 OF 119
C-36	DETAILS – PIPES	50 OF 119
C-37	DETAILS – SECURITY FENCE	51 OF 119
C-38	DETAILS – FLOODGATE	52 OF 119
C-39	DETAILS – SETTLEMENT PLATE	53 OF 119
C-40	UTILITY SHEET LAYOUT PLAN – OVERALL LAYOUT	54 OF 119
C-41	UTILITY PLAN – STA 6+00 TO STA 18+00 (C-LINE)	55 OF 119
C-42	UTILITY PLAN – STA 18+00 TO STA 31+00 (C-LINE)	56 OF 119
C-43	UTILITY PLAN – STA 30+00 TO STA 39+00 (C-LINE)	57 OF 119
C-44	UTILITY PLAN – STA 39+00 TO STA 51+00 (C-LINE)	58 OF 119
C-45	UTILITY PLAN – STA 51+00 TO STA 63+00 (C-LINE)	59 OF 119
C-46	UTILITY PLAN – STA 63+00 TO STA 73+00 (C-LINE)	60 OF 119
C-47	UTILITY PLAN – STA 70+00 TO STA 77+50 (C-LINE)	61 OF 119
C-48	PLAN AND PROFILE – NEW UTILITIES	62 OF 119
C-49	PLAN AND PROFILE/DETAIL – STORM DRAIN – MITIGATION AREA	63 OF 119
	CROSS SECTIONS	
X-1	CROSS SECTIONS – (C-LINE) STA 3+00 TO 6+00	64 OF 119
X-2	CROSS SECTIONS – (C-LINE) STA 7+00 TO 10+00	65 OF 119
X-3	CROSS SECTIONS – (C-LINE) STA 11+00 TO 14+00	66 OF 119
X-4	CROSS SECTIONS – (C-LINE) STA 15+00 TO 18+00	67 OF 119
X-5	CROSS SECTIONS – (C-LINE) STA 19+00 TO 22+00	68 OF 119
X-6	CROSS SECTIONS – (C-LINE) STA 23+00 TO 26+00	69 OF 119
X-7	CROSS SECTIONS – (C-LINE) STA 27+00 TO 30+00	70 OF 119
X-8	CROSS SECTIONS – (C-LINE) STA 31+00 TO 34+00	71 OF 119
X-9	CROSS SECTIONS – (C-LINE) STA 35+00 TO 38+00	72 OF 119
X-10	CROSS SECTIONS – (C-LINE) STA 39+00 TO 42+00	73 OF 119
X-11	CROSS SECTIONS – (C-LINE) STA 43+00 TO 46+00	74 OF 119
X-12	CROSS SECTIONS – (C-LINE) STA 47+00 TO 50+00	75 OF 119
X-13	CROSS SECTIONS – (C-LINE) STA 51+00 TO 54+00	76 OF 119
X-14	CROSS SECTIONS – (C-LINE) STA 55+00 TO 58+00	77 OF 119
X-15	CROSS SECTIONS – (C-LINE) STA 59+00 TO 62+00	78 OF 119
X-16	CROSS SECTIONS – (C-LINE) STA 63+00 TO 66+00	79 OF 119
X-17	CROSS SECTIONS – (C-LINE) STA 67+00 TO 70+00	80 OF 119
X-18	CROSS SECTIONS – (C-LINE) STA 71+00 TO 74+00	81 OF 119
X-19	CROSS SECTIONS – (C-LINE) STA 75+00 TO 77+62	82 OF 119
	STRUCTURAL	
S-1	SHEET PILE DETAILS NO. 1	83 OF 119
S-2	SHEET PILE DETAILS NO. 2	84 OF 119
S-3	SHEET PILE DETAILS NO. 3	85 OF 119
S-4	SHEET PILE DETAILS NO. 4	86 OF 119
S-5	SHEET PILE DETAILS NO. 5	87 OF 119
S-6	GENERAL PLAN	88 OF 119
S-7	FOUNDATION PLAN	89 OF 119
S-8	ABUTMENT DETAILS NO. 1	90 OF 119
S-9	ABUTMENT DETAILS NO. 2	91 OF 119
S-10	TYPICAL SECTIONS	92 OF 119
S-11	MISCELLANEOUS DETAILS	93 OF 119
	LANDSCAPING	
L-1	PLANTING PLAN (R-LINE) – STA 9+00 TO 19+00	94 OF 119
L-2	PLANTING PLAN (R-LINE) – STA 19+00 TO 29+00	95 OF 119
L-3	PLANTING PLAN (R-LINE) – STA 29+00 TO 40+00	96 OF 119
L-4	PLANTING PLAN (R-LINE) – STA 40+00 TO 50+00	97 OF 119
L-5	PLANTING PLAN (R-LINE) – STA 50+00 TO 58+00	98 OF 119
L-6	PLANTING PLAN (R-LINE) – STA 58+00 TO 67+00	99 OF 119
L-7	PLANTING PLAN (R-LINE) – STA 67+00 TO 75+54	100 OF 119
L-8	PLANTING NOTES AND PROGRAM	101 OF 119
L-9	PLANTING DETAILS	102 OF 119
L-10	TREE DEMOLITION PLAN (R-LINE) – STA 23+00 TO 32+00	103 OF 119
L-11	TREE DEMOLITION PLAN (R-LINE) – STA 32+00 TO 41+00	104 OF 119
L-12	TREE DEMOLITION PLAN (R-LINE) – STA 41+00 TO 50+00	105 OF 119
L-13	TREE DEMOLITION PLAN (R-LINE) – STA 50+00 TO 57+00	106 OF 119
L-14	TREE DEMOLITION PLAN (R-LINE) – STA 57+00 TO 63+50	107 OF 119
L-15	TREE DEMOLITION PLAN (R-LINE) – STA 63+50 TO 74+00	108 OF 119
L-16	TREE DEMOLITION PLAN (R-LINE) – STA 66+50 TO 68+50	109 OF 119
L-17	IRRIGATION NOTES & LEGEND	110 OF 119
L-18	CITY STANDARD IRRIGATION DETAILS	111 OF 119
L-19	IRRIGATION DETAILS	112 OF 119
L-20	IRRIGATION PLAN (R-LINE) – STA 9+00 TO 19+00	113 OF 119
L-21	IRRIGATION PLAN (R-LINE) – STA 19+00 TO 29+00	114 OF 119
L-22	IRRIGATION PLAN (R-LINE) – STA 29+00 TO 40+00	115 OF 119
L-23	IRRIGATION PLAN (R-LINE) – STA 40+00 TO 50+00	116 OF 119
L-24	IRRIGATION PLAN (R-LINE) – STA 50+00 TO 58+00	117 OF 119
L-25	IRRIGATION PLAN (R-LINE) – STA 58+00 TO 67+00	118 OF 119
L-26	IRRIGATION PLAN (R-LINE) – STA 67+00 TO 76+00	119 OF 119

REV	DESCRIPTION	DATE	APPR.
	DRAFT 100% AUGUST 2014		

HDR Engineering, Inc.

DATE: JULY 2014
DESIGN: L. JONES
DRAWN: H. SUAREZ
CHECKED: P. HRADILEK

ENGINEERING CERTIFICATION
REGISTERED PROFESSIONAL ENGINEER LANCE M. JONES 68374 Exp. 09-30-15 CIVIL STATE OF CALIFORNIA
PRELIMINARY
PROJECT ENGINEER DATE

SAN FRANCISQUITO CREEK JOINT POWERS AUTHORITY
ACCEPTED BY DISTRICT
PROJECT ENGINEER DATE

PROJECT NAME AND SHEET DESCRIPTION:
SAN FRANCISQUITO CREEK FLOOD REDUCTION, ECOSYSTEM RESTORATION, & RECREATION PROJECT
DRAWING INDEX

SCALE: NA
VERIFY SCALES: 0 1"
BAR IS ONE INCH ON ORIGINAL DRAWING IF NOT ONE INCH ON THIS SHEET, ADJUST SCALES ACCORDINGLY

PROJECT NUMBER: 26284002
SHEET CODE: G-2
SHEET NUMBER: 2 OF 119

DOCUMENT NUMBER: SFC_LP-G-1028-XXXXXXX

USERNAME: BillShad Tue 08 Jul 2008 09:32am
FILENAME: C:\pwworking\sac\d0171341\G-02

GENERAL SITE PLAN

SCALE: 1"=200'

KEY NOTE:

(1) CONTRACTOR TO INSTALL PROJECT SIGNS PROVIDED BY SCVWD.

USERNAME: BillShad Tue 08 Jul 2008 09:32am
FILENAME: C:\pwworking\sac\d0171341\G-03

DOCUMENT NUMBER: SFC_LP-G-1028-XXXXXXX

REV	DESCRIPTION	DATE	APPR.
	DRAFT 100% AUGUST 2014		

HDR Engineering, Inc.

DATE JULY 2014
DESIGN L. JONES
DRAWN H. SUAREZ
CHECKED P. HRADILEK

ENGINEERING CERTIFICATION
REGISTERED PROFESSIONAL ENGINEER LANCE M. JONES 66372 Exp. 12-30-15 CIVIL STATE OF CALIFORNIA
PRELIMINARY
PROJECT ENGINEER DATE

SAN FRANCISQUITO CREEK JOINT POWERS AUTHORITY
ACCEPTED BY DISTRICT
PROJECT ENGINEER DATE

PROJECT NAME AND SHEET DESCRIPTION:
SAN FRANCISQUITO CREEK FLOOD REDUCTION, ECOSYSTEM RESTORATION, & RECREATION PROJECT
GENERAL SITE PLAN

SCALE 1" = 200'
VERIFY SCALES 0 1"
BAR IS ONE INCH ON ORIGINAL DRAWING IF NOT ONE INCH ON THIS SHEET, ADJUST SCALES ACCORDINGLY

PROJECT NUMBER 26284002
SHEET CODE: G-3
SHEET NUMBER: 3 OF 119

ABBREVIATIONS

AB – AGGREGATE BASE
ABUT – ABUTMENT
AC – ASPHALT CONCRETE
ACP – ASPHALT CONCRETE PIPE
AISI – AMERICAN IRON & STEEL INSTITUTE
ALIGN – ALIGNMENT
ANSI – AMERICAN NATIONAL STANDARDS INSTITUTE
APPROX – APPROXIMATE
ARV – AIR RELEASE VALVE
ASTM – AMERICAN SOCIETY FOR TESTING MATERIALS
AWWA – AMERICAN WATER WORKS ASSOCIATION

BB – BEGINNING OF BRIDGE
BRG – BEARING
BC – BEGIN CURVE
BM – BENCH MARK
BVCE – BEGIN VERTICAL CURVE ELEVATION
BVCS – BEGIN VERTICAL CURVE STATION

C – CENTER
℄ – CENTERLINE
CB – CATCH BASIN (INLET)
CFS – CUBIC FEET PER SECOND
CI – CAST IRON
CIDH – CAST-IN-DRILLED-HOLE
CIP – CAST-IN-PLACE,
– CAST IRON PIPE
CIPP – CAST-IN-PLACE PIPE
CL – CLEARANCE
CLR – CLEAR
CMP – CORRUGATED METAL PIPE
CO – CLEAN OUT
CONC – CONCRETE
CONT – CONTINUOUS
CP – CEMENT PIPE
CSP – CORRUGATED STEEL PIPE
CTP – CABLE TELEVISION POLE
CTV – CABLE TV
CU FT – CUBIC FEET

DESC – DESCRIPTION
DG – DECOMPOSED GRANITE
DH – DRILL HOLES
DI – DRAIN INLET
DIA – DIAMETER
DIAPH – DIAPHRAGM
DICL – DUCTILE IRON CEMENT LINED
DIP – DUCTILE IRON PIPE
DL – DAYLIGHT
D/S – DOWNSTREAM
DWR – DEPARTMENT OF WATER RESOURCES

(E) – EXISTING
E – EAST
EB – END OF BRIDGE
EC – END CURVE
ELEC – ELECTRICAL
ELEV/EL – ELEVATION
EP – EDGE OF PAVEMENT
EPA – EAST PALO ALTO
EPASD – EAST PALO ALTO SANITARY DISTRICT
EPDM – ETHYLENE PROPYLENE DIENE MONOMER
ETC – ETCETERA
EVCE – END VERTICAL CURVE ELEVATION
EVCS – END VERTICAL CURVE STATION

FG – FINISHED GRADE
FH – FIRE HYDRANT
FT – FEET
FTG – FOOTING

GALV – GALVANIZED
GB – GRADE BREAK
GLULAM – GLUE LAMINATED TIMBER

HORIZ – HORIZONTAL
HT – HEIGHT

ID – INSIDE DIAMETER
IF – INSIDE FACE
IN – INCH
INV – INVERT
IP – IRON PIPE

JT – JOINT TRENCH

K – RATE OF VERTICAL CURVE
KV – KILO VOLT

L – LEFT
LF – LINEAR FEET
LG – LONG
LT – LEFT
LVC – LENGTH OF VERTICAL CURVE
LOL – LAYOUT LINE

MAINT – MAINTENANCE
MAX – MAXIMUM
MH – MANHOLE
MHHW – MEAN HIGHER HIGH WATER
MIN – MINIMUM
MON – MONUMENT
MW – MONITORING WELL

N – NORTH
N/A – NOT APPLICABLE
NAVD – NORTH AMERICAN VERTICAL DATUM
NE – NORTHEAST
NO – NUMBER
NTS – NOT TO SCALE
NUM – NUMBER
NW – NORTHWEST

O&M – OPERATION & MAINTENANCE
OC – ON CENTER
OD – OUTSIDE DIAMETER
OG – ORIGINAL GROUND
OHE – OVERHEAD ELECTRIC

PA – PALO ALTO
PCC – PORTLAND CEMENT CONCRETE
P.E. – PROFESSIONAL ENGINEER
PED – PEDESTRIAN
PG&E – PACIFIC GAS AND ELECTRIC
PI – POINT OF INTERSECTION
PK – PARKER-KALON SURVEY NAIL
POT – POINT ON TANGENT
PP – POWER POLE
PRC – POINT OF REVERSE CURVE
PSI – POUND PER SQUARE INCH
PT – PRESSURE TREATED
PUE – PUBLIC UTILITY EASEMENT
PVC – POLYVINYL CHLORIDE
PVMT – PAVEMENT
PW – PUMPING WELL

Q_{100} – 100 YEAR FREQUENCY FLOW

R – RADIUS, RIGHT
RD – ROAD
RCB – REINFORCED CONCRETE BOX
RCP – REINFORCED CONCRETE PIPE
REBAR – REINFORCING BAR
REINF – REINFORCED
REQ'D – REQUIRED
RR – RAILROAD
RSP – ROCK SLOPE PROTECTION
RT – RIGHT
R/W – RIGHT OF WAY

S – SLOPE,
– SOUTH
SCHED – SCHEDULE
SCVWD – SANTA CLARA VALLEY WATER DISTRICT
SD – STORM DRAIN
SE – SOUTHEAST
SFC – SAN FRANCISQUITO CREEK
SHT – SHEET
SJMW – SAN JOSE MUNICIPAL WATER
SJWC – SAN JOSE WATER COMPANY
SPECS – SPECIFICATIONS
SPRR – SOUTHERN PACIFIC RAILROAD
SQ – SQUARE
SS – SANITARY SEWER
SSTL – STAINLESS STEEL
ST – STREET
STA – STATION
STD – STANDARD
STL – STEEL
STRD – STRANDED
SW – SOUTHWEST
SWPPP – STORM WATER POLLUTION PREVENTION PLAN
SYM – SYMMETRICAL

T – TELEPHONE
t – THICKNESS OF PLATE OR DIMENSION OF WELD
TBM – TEMPORARY BENCH MARK
TCA – TEMPORARY CONSTRUCTION AREA
TCE – TEMPORARY CONSTRUCTION EASEMENT
TEL – TELEPHONE
TIP EL – ELEVATION AT THE BOTTOM OF THE SHEET PILE FLOODWALL
TOB – TOP OF BANK
TOL – TOP OF LEVEE
TOT – TOTAL
TP – TEST PIT LOCATION
TRANS – TRANSFORM
TRM – TURF REINFORCEMENT MAT
TS – TRAFFIC SIGNAL
TYP – TYPICAL

UG – UNDERGROUND
UPRR – UNION PACIFIC RAILROAD
U/S – UPSTREAM
USGS – UNITED STATES GEOLOGICAL SURVEY

V – VOLTAGE
VCP – VITRIFIED CLAY PIPE
VERT – VERTICAL

W – WATER,
– WEST
WM – WIRE MESH
WP – WORK POINT
WSE – WATER SURFACE ELEVATION
WSP – WELDED STEEL PIPE
WSCL – WRAPPED STEEL CEMENT LINED
WV – WATER VALVE
WW – WINGWALL
WWF – WELDED WIRE FABRIC
W/ – WITH

& – AND
@ – AT
℄ – CENTERLINE
Ø – DIAMETER
PL – PROPERTY LINE

DETAIL AND SECTION DESIGNATION

* IF SECTION OR DETAIL APPEARS ON THE SAME DRAWING AS THE CALLOUT, THE DRAWING REFERENCE IS REPLACED WITH A DASH (–)

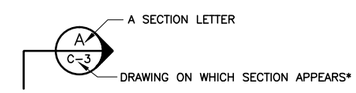

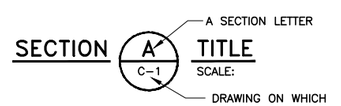

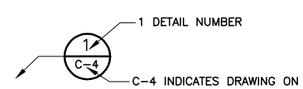

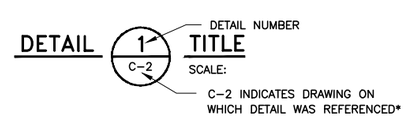

EXISTING LINE TYPE LEGEND

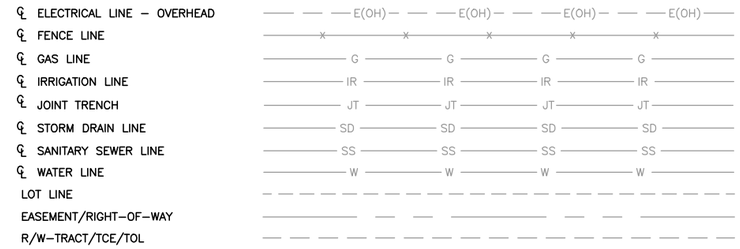

PROPOSED LINE TYPE LEGEND

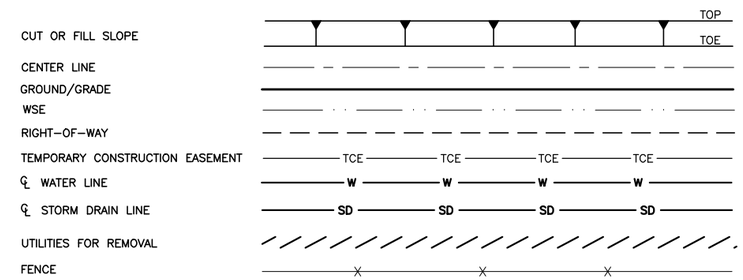

SURVEY

HORIZONTAL CONTROL
VERTICAL CONTROL
HORIZONTAL VERTICAL CONTROL
TEMPORARY BENCH MARK
237 SURVEY CONTROL POINT
SETTLEMENT PLATE

TRAFFIC CONTROL

STAGING AREA ACCESS ROAD
PROJECT SIGN

MISCELLANEOUS

WATER SURFACE
ELECTROLIER
GUY WIRE
STORM DRAIN OUTFALL

SYMBOLS LEGEND

KEY NOTE
UTILITY POLE
STORM DRAIN MANHOLE
CATCH BASIN / SD INLET
SANITARY MANHOLE
TREE
ELECTRICAL TOWER
FLOW DIRECTION
FIRE HYDRANT
FOLDABLE BOLLARD
VALVE

SECTION MATERIALS

ROCK SLOPE PROTECTION
AGGREGATE BASE
LIMITS OF NEW LEVEE FILL
LIMITS OF INSPECTION TRENCH
LIMITS OF NEW ACCESS ROAD FILL
NEW UTILITY TRENCH FINAL BACKFILL
LIMITS OF EXCAVATION OF EXISTING LEVEE
NEW UTILITY TRENCH SUBSEQUENT BACKFILL
LIMITS OF EXCAVATION OF RUBBLE MOUND
NEW UTILITY TRENCH INITIAL BACKFILL
STAGING/STOCKPILING AREA
PCC PAVEMENT
AC PAVEMENT
(E) MITIGATION AREA
TURF REINFORCEMENT MAT
STEEL

GENERAL NOTES

1. ALL EXISTING FACILITIES, STRUCTURES, TREES, FENCES, LANDSCAPING, ETC., DESIGNATED "EXIST". OR SHOWN EXISTING (DASHED LINES) ARE TO REMAIN. ONLY THOSE SPECIFICALLY DESIGNATED FOR REMOVAL AS SHOWN ON THE DRAWINGS, OR AS DIRECTED BY THE ENGINEER SHALL BE REMOVED.
2. ALL REFERENCES MADE TO RIGHT OR LEFT AND ALL CROSS-SECTIONS SHOWN ON THE PLANS ARE VIEWED LOOKING UPSTREAM.
3. DATE OF PHOTOGRAPHY: MARCH 4, 2010
   HORIZONTAL DATUM:
   CALIFORNIA COORDINATE SYSTEM, ZONE 3
   NORTH AMERICAN DATUM OF 1983 (NAD83, NSR 2007)
   VERTICAL DATUM:
   NORTH AMERICAN VERTICAL DATUM OF 1988 (NAVD88)
   PROJECT CONVERSION: EL. 0.0 NAVD 88=EL. –2.75 NAVD 29
   GROUND CONTROL SURVEY BY: TOWILL, INC.

REV	DESCRIPTION	DATE	APPR.
	DRAFT 100% AUGUST 2014		

HDR Engineering, Inc.

DATE JULY 2014
DESIGN L. JONES
DRAWN H. SUAREZ
CHECKED P. HRADILEK

ENGINEERING CERTIFICATION
REGISTERED PROFESSIONAL ENGINEER LANCE M. JONES 68374 Exp. 09-30-15 CIVIL STATE OF CALIFORNIA
PRELIMINARY
PROJECT ENGINEER DATE

SAN FRANCISQUITO CREEK JOINT POWERS AUTHORITY
ACCEPTED BY DISTRICT
PROJECT ENGINEER DATE

PROJECT NAME AND SHEET DESCRIPTION:
SAN FRANCISQUITO CREEK FLOOD REDUCTION, ECOSYSTEM RESTORATION, & RECREATION PROJECT
ABBREVIATIONS, LEGEND AND GENERAL NOTES

SCALE NOT TO SCALE
VERIFY SCALES 0 1"
BAR IS ONE INCH ON ORIGINAL DRAWING IF NOT ONE INCH ON THIS SHEET, ADJUST SCALES ACCORDINGLY

PROJECT NUMBER 26284002
SHEET CODE: G-4
SHEET NUMBER: 3 OF 119

DOCUMENT NUMBER: SFC_LP-G-1028-XXXXXXX

USERNAME: BillShad Tue 08 Jul 2008 09:32am
FILENAME: C:\pwworking\sac\d0171341\G-04

WATER

City of Palo Alto Water

Bryan Hagins - (650) 496-6907 - bryan.hagins@cityofpaloalto.org

LOCAL AGENCY CONTACTS

City of Palo Alto

Baylands Athletic Center - Rob De Geus - (650) 463-4908 - robert.degeus@cityofpaloalto.org

Palo Alto Airport Terminal - (408) 918-7702

Public Works Department - Joe Teresi - (650) 329-2129 - joe.teresi@cityofpaloalto.org

Palo Alto Municipal Golf Course - Joe Vallaire - (650) 496-6997 - joseph.vallaire@cityofpaloalto.org

Palo Alto Municipal Golf Course Maintenance - Brian Daum - (310) 346-0417

Palo Alto Open Space - Richard Bicknell - (650) 617-3156 - richard.bicknell@cityofpaloalto.org

City of East Palo Alto

Public Works Department

Kamal Fallaha - (650) 853-3189 - kfallaha@cityofepa.org

1960 Tate Street, East Palo Alto, CA 94303

San Mateo County

Public Works Department

Ann Stillman - (650) 599-1497 - astillman@smcgov.org

555 County Center, Redwood City, CA 94063

TELECOMMUNICATION

Comcast

Derek - (650) 551-7366

901 Weeks Street, East Palo Alto, CA 94303

UNDERGROUND SERVICE ALERT

USA - 811

SEWER

West Bay Sanitary District

Bob Scheidt - (650) 321-0384 - bscheidt@westbaysanitary.org

500 Laurel Street, Menlo Park, CA 94025

East Palo Alto Sanitary District

Stephanie Griffin - (650) 325-9021 X 105 - sgriffin@epasd.com

901 Weeks Street, East Palo Alto, CA 94303

City of Palo Alto Sewer

Frank Alvarado - (650) 496-6917 - frank.alvarado@cityofpaloalto.org

GAS

Pacific Gas and Electric (PG&E)

Al Norrenberg - (408) 365-3102

6402 Santa Teresa Blvd, San Jose, CA 95119-1203

City of Palo Alto Gas

Todd Carlsen - (650) 496-6960 - todd.carlsen@cityofpaloalto.org

ELECTRIC

Pacific Gas and Electric (PG&E)

Deborah Vaccaro - (408) 365-2045

6403 Santa Teresa Blvd, San Jose, CA 95119-1203

Pacific Gas and Electric (PG&E)

Nick Mandoza - (650) 592-9268

275 Industrial Way, San Carlos, CA 94070

City of Palo Alto

Greg Schulz - (650) 496-6933 - greg.schulz@cityofpaloalto.org

GENERAL NOTES

1. THE CONTRACTOR SHALL COORDINATE WORK WITH PACIFIC GAS AND ELECTRIC, EAST PALO ALTO SANITARY DISTRICT (EPASD), SAN MATEO COUNTY PUBLIC WORKS, THE CITY OF PALO ALTO, THE AMERICAN WATER COMPANY, AND THE CITY OF EAST PALO ALTO PUBLIC WORKS DEPARTMENT WHEN WORKING NEAR POWER POLES/LINES, OR ANY OTHER UTILITY STRUCTURES, BOXES, ETC. WORK WILL COMPLY WITH THE BAY AREA QUALITY MANAGEMENT DISTRICT REQUIREMENTS FOR AIRBORNE PARTICULATES AND DUST.
2. THE CONTRACTOR SHALL BE SOLELY AND COMPLETELY RESPONSIBLE FOR FURNISHING AND MAINTAINING ALL WARNING SIGNS, DEVICES, AND FEATURES NECESSARY TO PROTECT THE HEALTH AND SAFETY OF THE GENERAL PUBLIC AND WORKERS AND TO PROVIDE FOR THE PROPER AND SAFE ROUTING OF VEHICULAR AND PEDESTRIAN TRAFFIC DURING THE PERFORMANCE OF THE WORK.
3. THE CONTRACTOR SHALL BE RESPONSIBLE FOR COMPLIANCE WITH ALL APPLICABLE FEDERAL, STATE AND LOCAL LAWS, RULES AND REGULATIONS APPLICABLE TO ALL WORK PERFORMED UNDER THE CONTRACT.
4. CONTRACTOR SHALL PROVIDE AND IMPLEMENT A STORM WATER POLLUTION PREVENTION PLAN (SWPPP) IN ACCORDANCE WITH THE SPECIFICATIONS AND PERMITS.
5. THE CONTRACTOR SHALL VERIFY ALL DIMENSIONS, SIZES, AND LOCATIONS OF ALL EXISTING FACILITIES AND FEATURES BEFORE STARTING WORK AND SHALL IMMEDIATELY NOTIFY THE ENGINEER OF ANY DISCREPANCIES.
6. UTILITY INFORMATION WAS COMPILED FROM DATA PROVIDED BY THE UTILITY OWNERS AND LOCATIONS ARE APPROXIMATE. THE ACTUAL LOCATIONS AND ELEVATIONS OF THE EXISTING UTILITIES SHALL BE VERIFIED BY THE CONTRACTOR. ALL EXISTING UNDERGROUND AND OVERHEAD UTILITIES SHALL BE PROTECTED FROM CONSTRUCTION EQUIPMENT AND OPERATIONS, UNLESS OTHERWISE NOTED.
7. THE CONTRACTOR IS HEREBY NOTIFIED THAT, PRIOR TO COMMENCING CONSTRUCTION, THE CONTRACTOR IS RESPONSIBLE FOR CONTACTING ALL UTILITY COMPANIES WHO ARE INVOLVED WITH THIS PROJECT. IN ADDITION, THE CONTRACTOR IS TO REQUEST TO HAVE ALL UNDERGROUND UTILITIES, THAT MAY POSSIBLY CONFLICT WITH THE ABOVE OR BELOW GROUND IMPROVEMENTS, LOCATED IN THE FIELD. THE CONTRACTOR AND ANY SUBCONTRACTOR, IS REQUIRED TO NOTIFY THE UNDERGROUND SERVICE ALERT 48 HOURS IN ADVANCE OF PERFORMING ANY EXCAVATION BY CALLING 1-800-227-2600.
8. THE CONTRACTOR IS RESPONSIBLE FOR THE PROTECTION OF ALL EXISTING MONUMENTS AND OTHER SURVEY MARKERS. MONUMENTS AND SURVEY MARKERS REMOVED OR DESTROYED DURING CONSTRUCTION SHALL BE REPLACED BY A LICENSED LAND SURVEYOR AT THE CONTRACTOR'S EXPENSE. CONTRACTOR SHALL PROVIDE AGENCY SURVEYORS WITH AT LEAST 48 HOURS ADVANCE NOTICE PRIOR TO REPLACEMENT OF MONUMENT AND/OR SURVEY MARKER.
9. THE CONTRACTOR SHALL BE RESPONSIBLE FOR MAINTAINING RECORD DRAWINGS FOR ALL WORK THROUGHOUT THE COURSE OF CONSTRUCTION. SUCH DRAWINGS SHALL RECORD THE LOCATION AND AS-BUILT CONDITION OF ALL PROJECT ELEMENTS. COPIES SHALL BE DELIVERED TO THE DISTRICT ENGINEER PRIOR TO THE ACCEPTANCE OF THE WORK AS INDICATED IN THE SPECIFICATIONS.
10. DRAWINGS SHOWN WITH AERIAL PHOTOS ARE PROVIDED FOR REFERENCE ONLY. ALL FACILITIES MAY NOT BE SHOWN ON PHOTOS. CONTRACTORS SHALL SATISFY THEMSELVES AS TO THE LOCATION OF EXISTING FACILITIES THAT MAY BE AFFECTED BY CONSTRUCTION.
11. EXISTING FENCING AND GATES WITHIN THE RIGHT-OF-WAY SHALL BE REMOVED AS REQUIRED FOR CONSTRUCTION AND AS SPECIFIED ON THE DRAWINGS. SALVAGE OF FENCING ITEMS SHALL BE IN ACCORDANCE WITH THE SPECIFICATIONS. WHERE EXISTING FENCING OR BARRIERS ARE REMOVED, TEMPORARY BARRIERS SHALL BE PROVIDED. FENCING, GATES, AND SIGNS SHALL BE REPLACED FOLLOWING CONSTRUCTION.
12. ALL FENCING OR GATES TO BE LOCATED ON A PROPERTY LINE SHALL BE LOCATED BY CONTRACTOR'S QUALIFIED LICENSED LAND SURVEYOR OR REGISTERED CIVIL ENGINEER QUALIFIED TO PERFORM LAND SURVEYING WORK.
13. CONTRACTOR SHALL PROVIDE DUST CONTROL AND STREET CLEANING MEASURES AT ALL TIMES.
14. ADMINISTRATION OF ALL WORK PERFORMED BY THE CONTRACTOR SHALL COMPLY WITH THE GENERAL SPECIFICATIONS.
15. THE CONTRACTOR SHALL COORDINATE CONSTRUCTION ACTIVITIES TO MINIMIZE DISRUPTION TO THE PALO ALTO STORM WATER PUMPING STATION AND THE O'CONNOR STORM WATER PUMPING STATION. THE CONTRACTOR SHALL COORDINATE OPERATIONS PER THE PROJECT'S STORM WATER POLLUTION PREVENTION PLAN.

BASIS OF DESIGN

1. DESIGN CRITERIA INFORMATION USED FOR THIS DRAWING SET IS DOCUMENTED BY HDR, INC. IN THE FOLLOWING DOCUMENT:

   DESIGN CRITERIA AND CONSIDERATIONS TECHNICAL MEMORANDUM, SAN FRANCISQUITO CREEK FLOOD PROTECTION CAPITAL PROJECT, HDR ENGINEERING, INC., JANUARY 2014.
2. THE GEOTECHNICAL INFORMATION USED FOR THIS DRAWING SET WAS PROVIDED BY GEI CONSULTANTS IN THE FOLLOWING DOCUMENT:

   SAN FRANCISQUITO CREEK FLOOD PROTECTION PROJECT, GEOTECHNICAL EVALUATION REPORT, MAY 2012, PROJECT NO. 092850.
3. THE PERFORMANCE OF LEVEE SYSTEMS IS DEPENDENT UPON BOTH THE DESIGN CRITERIA AND THE LONG TERM OPERATION AND MAINTENANCE OF THE LEVEES. HDR HAS PREPARED THESE PLANS AND ASSOCIATED SPECIFICATIONS IN ACCORDANCE WITH FEDERAL, STATE, AND USACE GUIDELINES USING INFORMATION FROM MULTIPLE SOURCES, INCLUDING OTHER DESIGN CONSULTANTS. IF EXTREME FLOODS (EXCEEDING THE DESIGN PROFILE), EXTREME EARTHQUAKES (EXCEEDING THE DESIGN PROFILE), OR OTHER LOADING CONDITIONS NOT EVALUATED IN THE DESIGN OCCUR, THE INTEGRITY OF THE LEVEE SYSTEM MAY BE COMPROMISED.
4. DISCHARGE CRITERIA:
   A. Q_{100} = 9,400 CFS AT O'CONNOR PUMPING STATION.
   B. Q_{100} = 9,300 CFS AT HIGHWAY 101.

REV	DESCRIPTION	DATE	APPR.
	DRAFT 100% AUGUST 2014		

HDR Engineering, Inc.

DATE	JULY 2014
DESIGN	L. JONES
DRAWN	H. SUAREZ
CHECKED	P. HRADILEK

ENGINEERING CERTIFICATION

REGISTERED PROFESSIONAL ENGINEER LANCE M. JONES 98374 Exp. 06-30-15 CIVIL STATE OF CALIFORNIA

PRELIMINARY

PROJECT ENGINEER DATE

SAN FRANCISQUITO CREEK JOINT POWERS AUTHORITY

ACCEPTED BY DISTRICT

PROJECT ENGINEER DATE

PROJECT NAME AND SHEET DESCRIPTION:

SAN FRANCISQUITO CREEK FLOOD REDUCTION, ECOSYSTEM RESTORATION, & RECREATION PROJECT

UTILITY AND LOCAL AGENCY CONTACTS, GENERAL NOTES AND BASIS OF DESIGN

SCALE: N/A

VERIFY SCALES: 0 1"

BAR IS ONE INCH ON ORIGINAL DRAWING IF NOT ONE INCH ON THIS SHEET, ADJUST SCALES ACCORDINGLY

PROJECT NUMBER: 26284002

SHEET CODE: G-5

SHEET NUMBER: 5 OF 119

DOCUMENT NUMBER: SFC_LP-G-1028-XXXXXXX

USERNAME: BillShad Tue 08 Jul 2008 09:32am
FILENAME: C:\pwworking\sac\d0171341\G-05

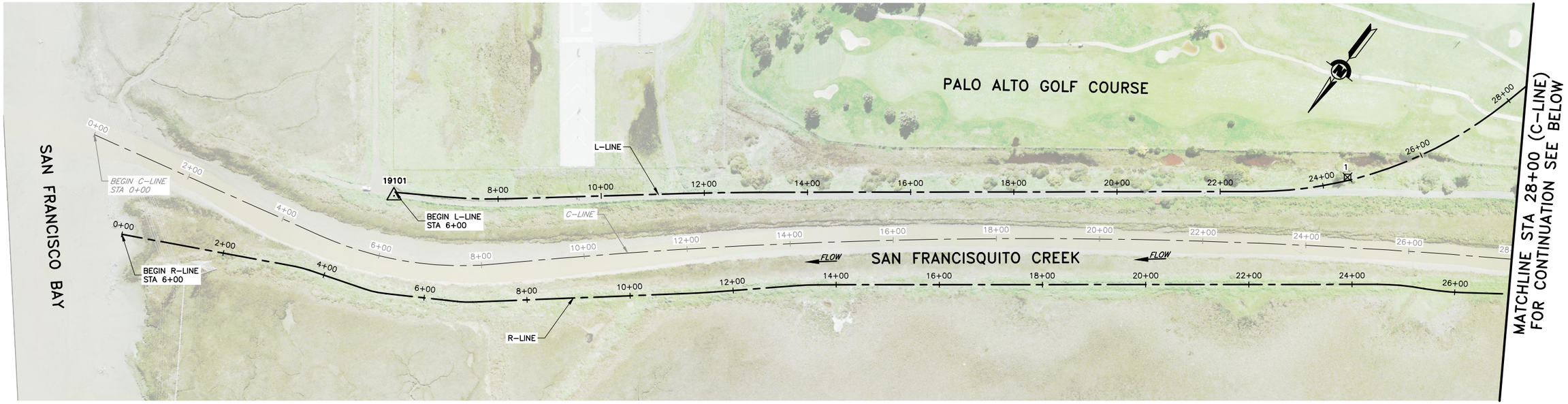

SURVEY CONTROL POINTS, SETTLEMENT PLATES PLAN

SCALE: 1"=100'

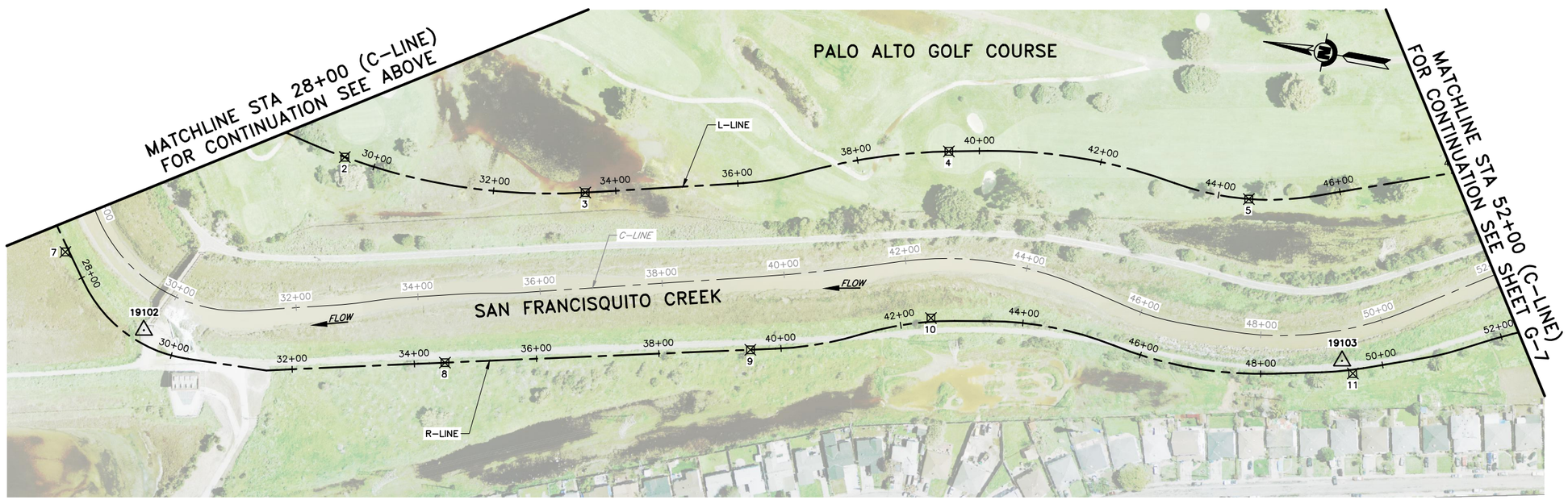

SURVEY CONTROL POINTS, SETTLEMENT PLATES PLAN

SCALE: 1"=100'

SHEET NOTES:

1. REFER TO SHEET G-7 FOR POINT TABLES.
2. DATE OF PHOTOGRAPHY: MARCH 4, 2010
   HORIZONTAL DATUM:
   CALIFORNIA COORDINATE SYSTEM, ZONE 3
   NORTH AMERICAN DATUM OF 1983
   (NAD83, NSR 2007)
   VERTICAL DATUM:
   NORTH AMERICAN VERTICAL
   DATUM OF 1988 (NAVD88)
   PROJECT CONVERSION: EL. 0.0 NAVD 88=EL. -2.75 NAVD 29
   GROUND CONTROL SURVEY BY: TOWILL, INC.

REV	DESCRIPTION	DATE	APPR.
	DRAFT 100% AUGUST 2014		

HDR Engineering, Inc.

DATE: JULY 2014
DESIGN: L. JONES
DRAWN: H. SUAREZ
CHECKED: P. HRADILEK
PROJECT ENGINEER DATE

ENGINEERING CERTIFICATION
REGISTERED PROFESSIONAL ENGINEER LANCE M. JONES 68272 Exp. 12-30-15 CIVIL STATE OF CALIFORNIA
PRELIMINARY

SAN FRANCISQUITO CREEK JOINT POWERS AUTHORITY

ACCEPTED BY DISTRICT
PROJECT ENGINEER DATE

PROJECT NAME AND SHEET DESCRIPTION:
SAN FRANCISQUITO CREEK FLOOD REDUCTION, ECOSYSTEM RESTORATION, & RECREATION PROJECT
SURVEY CONTROL AND SETTLEMENT PLATE LOCATIONS

SCALE: 1" = 100'
VERIFY SCALES: 0 1"
BAR IS ONE INCH ON ORIGINAL DRAWING IF NOT ONE INCH ON THIS SHEET, ADJUST SCALES ACCORDINGLY

PROJECT NUMBER: 26284002
SHEET CODE: G-6
SHEET NUMBER: 6 OF 119

DOCUMENT NUMBER: SFC_LP-G-1028-XXXXXXX

USERNAME: BillShad Tue 08 Jul 2008 09:32am
FILENAME: C:\pwworking\sac\d0171341\G-06

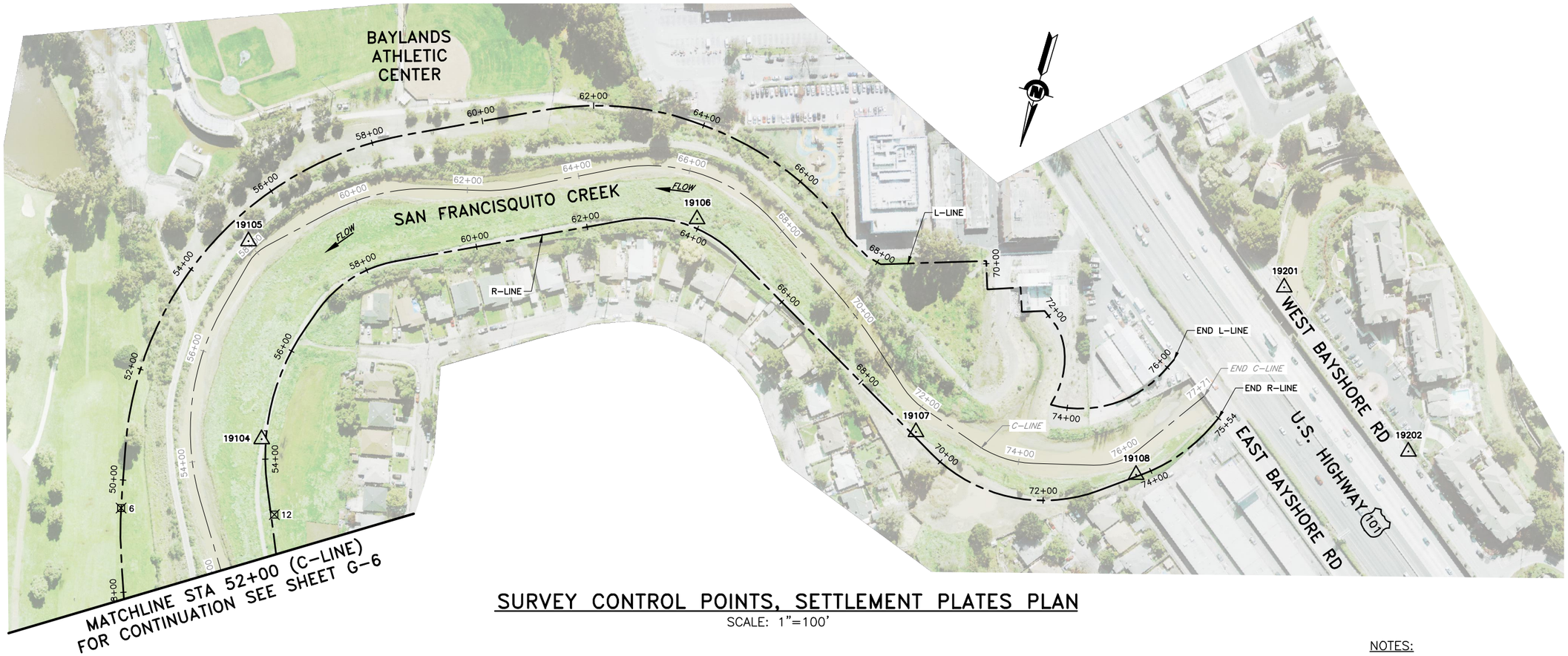

SURVEY CONTROL POINTS, SETTLEMENT PLATES PLAN

SCALE: 1"=100'

CONTROL POINT TABLE

POINT #	DESCRIPTION	ELEVATION	NORTHING	EASTING
19101	1/2"RBR/BE	13.81	1995836.71	6092295.69
19102	PK	16.24	1994502.92	6090321.55
19103	1/2"RBR/BE	15.09	1992566.53	6090625.87
19104	1/2"RBR/BE	15.55	1992101.46	6090806.29
19105	1/2"RBR/BE	15.97	1991770.12	6090927.60
19106	1/2"RBR/BE	15.95	1991508.27	6090172.94
19107	1/2"RBR/BE	17.08	1991762.31	6089693.00
19108	1/2"RBR/BE	17.28	1991725.09	6089295.87
19201	BEMT	18.96	1991331.37	6089136.66
19202	BEMT	18.17	1991549.37	6088842.67

SETTLEMENT PLATE POINT TABLE

POINT #	ALIGNMENT	STATION	OFFSET	PLATE EL	NORTHING	EASTING
1	L-LINE	24+50	6' LT	8.7	1994684.77	6090849.69
2	L-LINE	29+50	0	6.1	1994230.62	6090659.37
3	L-LINE	34+50	0	3.4	1993833.64	6090673.38
4	L-LINE	39+50	0	9.3	1993260.91	6090847.11
5	L-LINE	44+50	0	5.8	1992764.28	6090858.81
6	L-LINE	49+50	0	6.8	1992289.20	6091011.74
7	R-LINE	27+50	6' RT	10.5	1994652.33	6090424.31
8	R-LINE	34+50	0	10.0	1994008.97	6090358.25
9	R-LINE	39+50	0	10.4	1993521.40	6090469.07
10	R-LINE	42+50	6' LT	12.6	1993240.51	6090573.48
11	R-LINE	49+50	6' RT	10.5	1992545.54	6090608.72
12	R-LINE	53+00	6' RT	10.8	1992223.78	6090746.86

NOTES:

1. DATE OF PHOTOGRAPHY: MARCH 4, 2010
   HORIZONTAL DATUM:
   CALIFORNIA COORDINATE SYSTEM, ZONE 3
   NORTH AMERICAN DATUM OF 1983
   (NAD83, NSR 2007)
   VERTICAL DATUM:
   NORTH AMERICAN VERTICAL
   DATUM OF 1988 (NAVD88)
   PROJECT CONVERSION: EL. 0.0 NAVD 88=EL. −2.75 NAVD 29
   GROUND CONTROL SURVEY BY: TOWILL, INC.
2. CONTROL POINTS SHOWN WERE SET IN CONJUNCTION WITH THE US ARMY CORPS OF ENGINEERS, SF DISTRICT, SAN FRANCISQUITO CREEK RESTORATION PROJECT SURVEY REPORT, DATED SEPTEMBER 12, 2008.
3. SETTLEMENT PLATE ELEVATIONS ARE APPROXIMATE. CONTRACTOR SHALL INSURE THAT THE GEOGRID LAYER IS NOT DAMAGE BY PLACEMENT OF SETTLEMENT PLATE. A 1 FOOT VERTICAL SEPARATION IS NECESSARY.

ABBREVIATIONS:

½" RBR/BE CAP – ½" REBAR WITH PLASTIC CAP STAMPED "BESTOR CONTROL"

BEMT – MAGNETIC NAIL WITH BRASS TAG STAMPED "BESTOR ENGINEERS"

PK – "PK" BRAND NAIL

REV	DESCRIPTION	DATE	APPR.
	DRAFT 100% AUGUST 2014		

HDR Engineering, Inc.

DATE: JULY 2014
DESIGN: L. JONES
DRAWN: H. SUAREZ
CHECKED: P. HRADILEK

ENGINEERING CERTIFICATION
REGISTERED PROFESSIONAL ENGINEER LANCE M. JONES 98374 Exp. 09-30-15 CIVIL STATE OF CALIFORNIA
PRELIMINARY
PROJECT ENGINEER DATE

SAN FRANCISQUITO CREEK JOINT POWERS AUTHORITY
ACCEPTED BY DISTRICT
PROJECT ENGINEER DATE

PROJECT NAME AND SHEET DESCRIPTION:
SAN FRANCISQUITO CREEK FLOOD REDUCTION, ECOSYSTEM RESTORATION, & RECREATION PROJECT
SURVEY CONTROL AND SETTLEMENT PLATE LOCATIONS

SCALE: 1" = 100'
VERIFY SCALES: 0 1"
BAR IS ONE INCH ON ORIGINAL DRAWING IF NOT ONE INCH ON THIS SHEET, ADJUST SCALES ACCORDINGLY

PROJECT NUMBER: 26284002
SHEET CODE: G-7
SHEET NUMBER: 7 OF 119

DOCUMENT NUMBER: SFC_LP-G-1028-XXXXXXX

USERNAME: BillShad Tue 08 Jul 2008 09:32am
FILENAME: C:\pwworking\sac\d0171341\G-07

FOR CONTINUATION SEE SHEET G-9

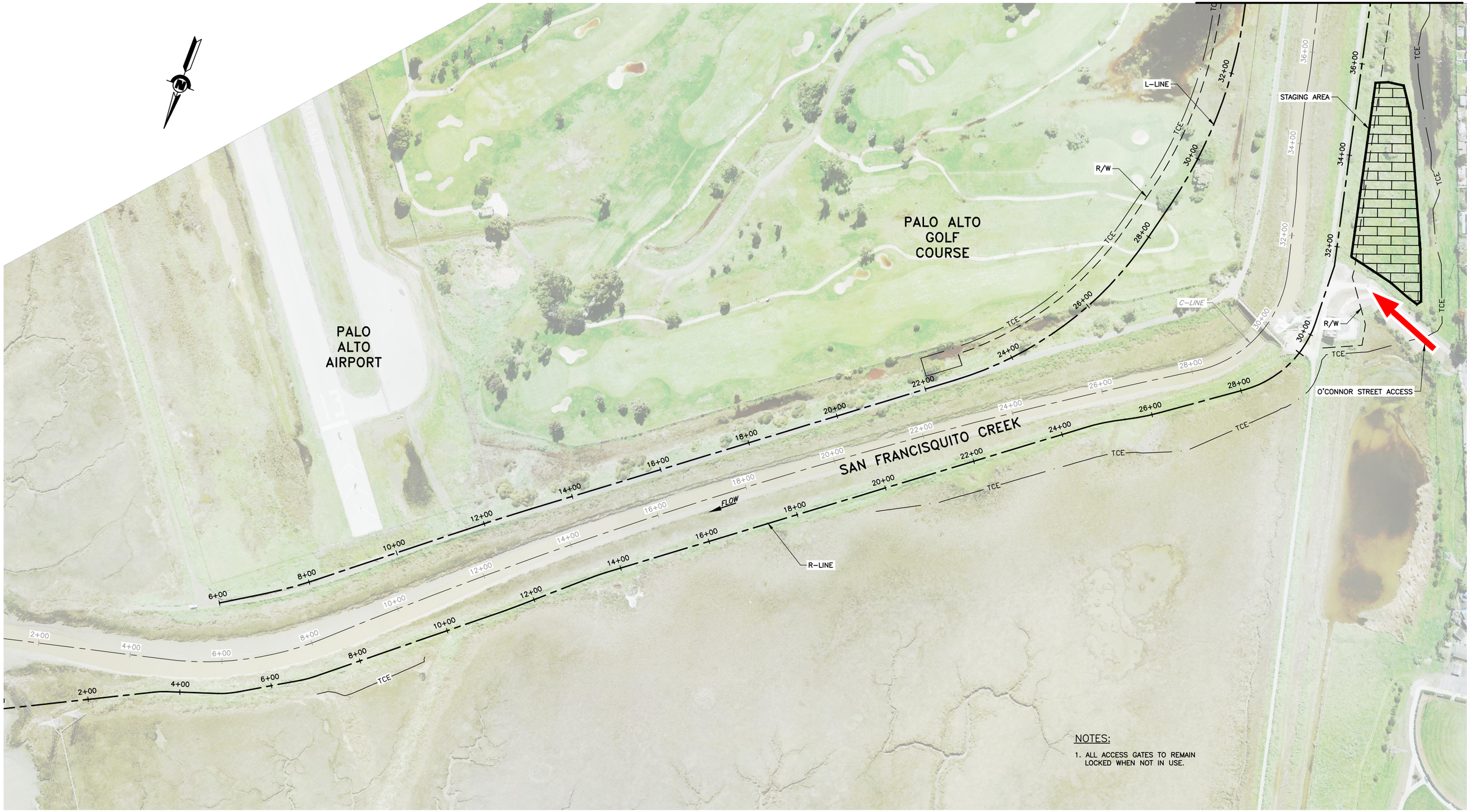

NOTES:

1. ALL ACCESS GATES TO REMAIN LOCKED WHEN NOT IN USE.

STAGING AREA AND ACCESS POINTS

SCALE: 1"=100'

REV	DESCRIPTION	DATE	APPR.
	DRAFT 100% AUGUST 2014		

HDR Engineering, Inc.

DATE: JULY 2014
DESIGN: L. JONES
DRAWN: H. SUAREZ
CHECKED: P. HRADILEK

ENGINEERING CERTIFICATION: REGISTERED PROFESSIONAL ENGINEER LANCE M. JONES 66374 Exp. 06-30-15 CIVIL STATE OF CALIFORNIA — PRELIMINARY

PROJECT ENGINEER DATE

SAN FRANCISQUITO CREEK JOINT POWERS AUTHORITY

ACCEPTED BY DISTRICT

PROJECT ENGINEER DATE

PROJECT NAME AND SHEET DESCRIPTION:

SAN FRANCISQUITO CREEK FLOOD REDUCTION, ECOSYSTEM RESTORATION, & RECREATION PROJECT

STAGING AREA AND ACCESS POINTS

SCALE: 1" = 100'

VERIFY SCALES: 0 — 1"
BAR IS ONE INCH ON ORIGINAL DRAWING IF NOT ONE INCH ON THIS SHEET, ADJUST SCALES ACCORDINGLY

PROJECT NUMBER: 26284002

SHEET CODE: G-8

SHEET NUMBER: 8 OF 119

DOCUMENT NUMBER: SFC_LP-G-1028-XXXXXXX

USERNAME: BillShad Tue 08 Jul 2008 09:32am
FILENAME: C:\pwworking\sac\d0171341\G-08

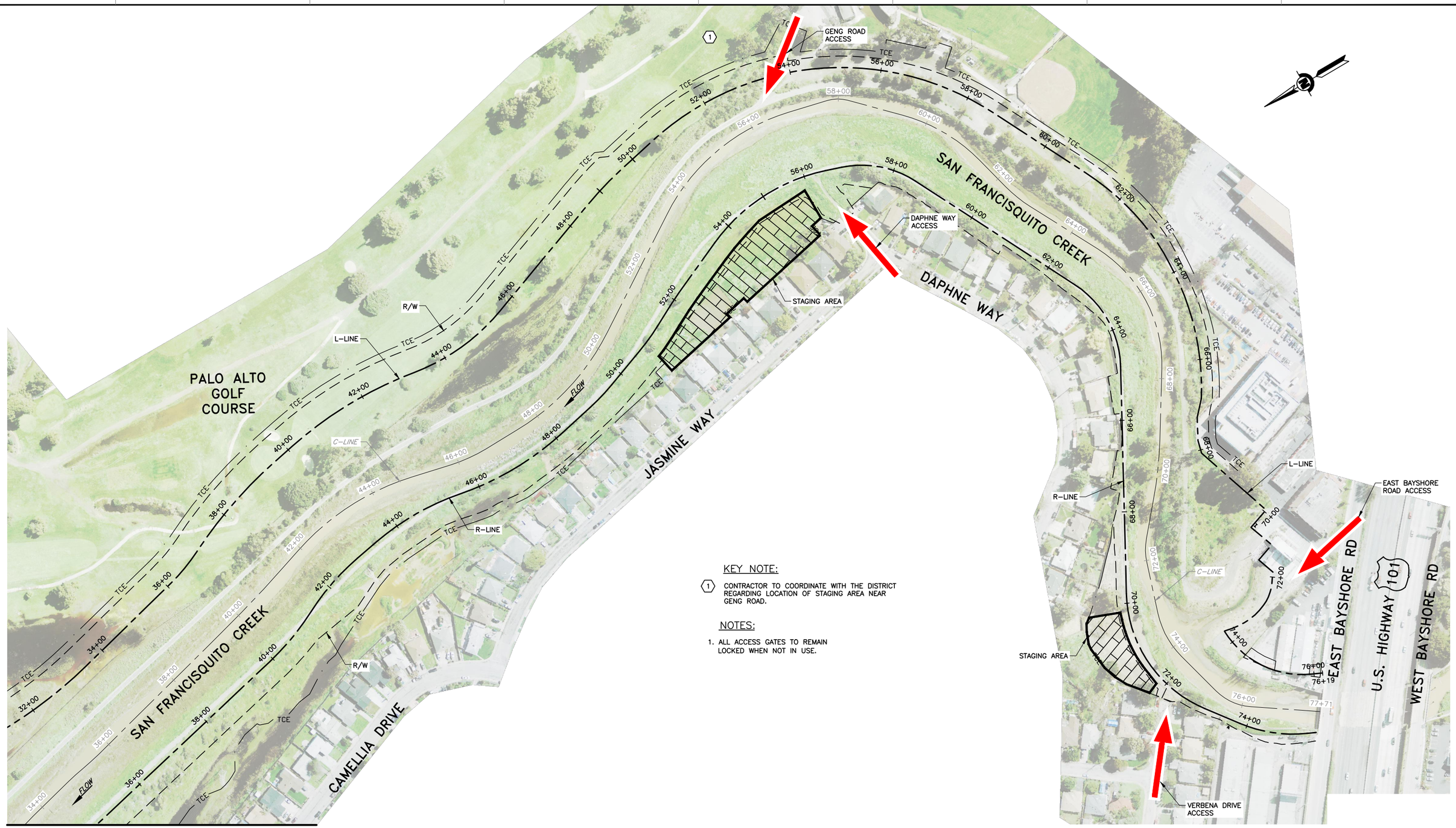

KEY NOTE:

(1) CONTRACTOR TO COORDINATE WITH THE DISTRICT REGARDING LOCATION OF STAGING AREA NEAR GENG ROAD.

NOTES:

1. ALL ACCESS GATES TO REMAIN LOCKED WHEN NOT IN USE.

FOR CONTINUATION SEE SHEET G-8

STAGING AREA AND ACCESS POINTS

SCALE: 1"=100'

REV	DESCRIPTION	DATE	APPR.
	DRAFT 100% AUGUST 2014		

HDR Engineering, Inc.

DATE: JULY 2014
DESIGN: L. JONES
DRAWN: H. SUAREZ
CHECKED: P. HRADILEK

ENGINEERING CERTIFICATION
REGISTERED PROFESSIONAL ENGINEER LANCE M. JONES 68074 Exp. 09-30-15 CIVIL STATE OF CALIFORNIA
PRELIMINARY
PROJECT ENGINEER DATE

SAN FRANCISQUITO CREEK JOINT POWERS AUTHORITY

ACCEPTED BY DISTRICT
PROJECT ENGINEER DATE

PROJECT NAME AND SHEET DESCRIPTION:
SAN FRANCISQUITO CREEK FLOOD REDUCTION, ECOSYSTEM RESTORATION, & RECREATION PROJECT
STAGING AREA AND ACCESS POINTS

SCALE: 1" = 100'
VERIFY SCALES: 0 — 1"
BAR IS ONE INCH ON ORIGINAL DRAWING IF NOT ONE INCH ON THIS SHEET, ADJUST SCALES ACCORDINGLY

PROJECT NUMBER: 26284002
SHEET CODE: G-9
SHEET NUMBER: 9 OF 119

DOCUMENT NUMBER: SFC_LP-G-1028-XXXXXXX

USERNAME: BillShad Tue 08 Jul 2008 09:32am
FILENAME: C:\pwworking\sac\d0171341\G-09

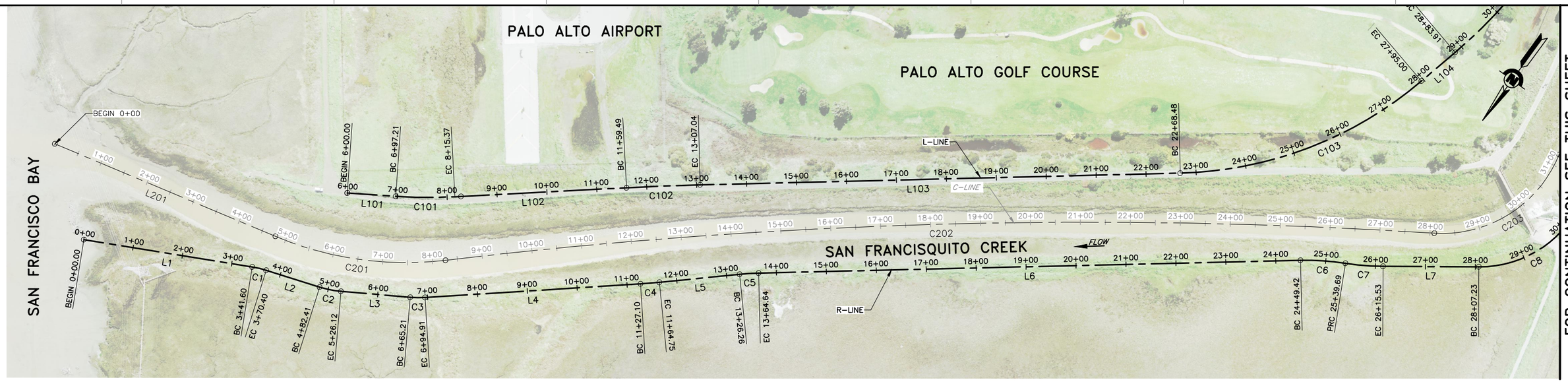

LEVEEE ALIGNMENT RIGHT BANK AND LEFT BANK LINE AND CURVE PLAN

SCALE: 1"=100'

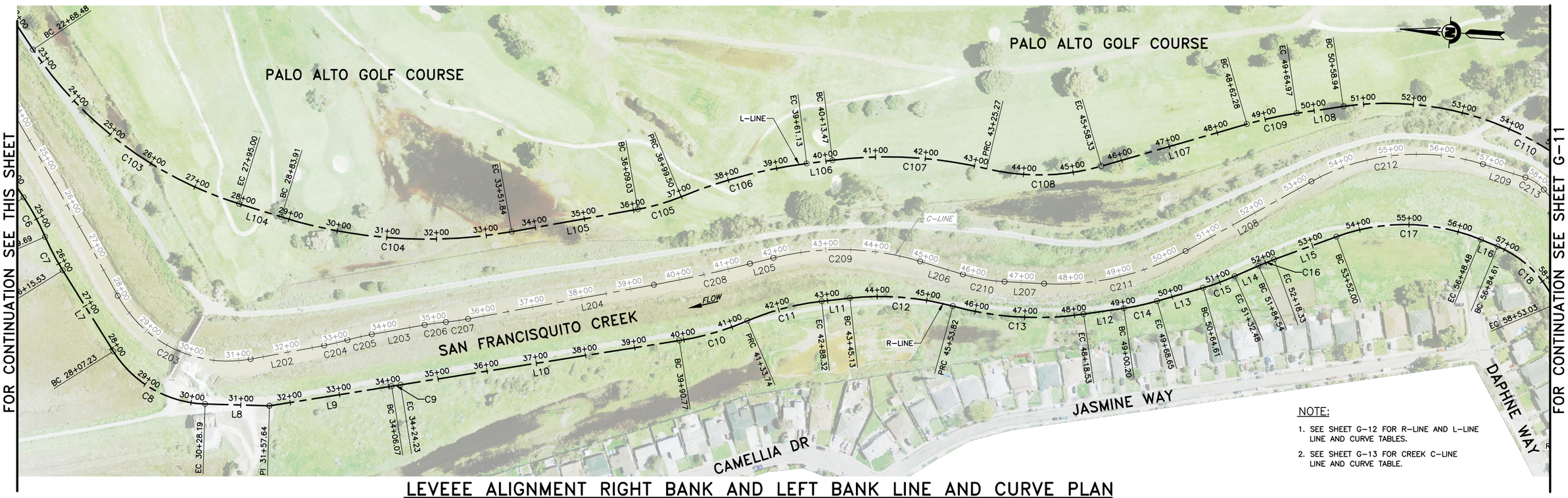

NOTE:

1. SEE SHEET G-12 FOR R-LINE AND L-LINE LINE AND CURVE TABLES.
2. SEE SHEET G-13 FOR CREEK C-LINE LINE AND CURVE TABLE.

LEVEEE ALIGNMENT RIGHT BANK AND LEFT BANK LINE AND CURVE PLAN

SCALE: 1"=100'

USERNAME: BillShad Tue 08 Jul 2008 09:32am
FILENAME: C:\pwworking\sac\d0171341\G-10

DOCUMENT NUMBER: SFC_LP-G-1028-XXXXXXX

REV	DESCRIPTION	DATE	APPR.
	DRAFT 100% AUGUST 2014		

HDR Engineering, Inc.

DATE	
JULY 2014	
DESIGN	L. JONES
DRAWN	H. SUAREZ
CHECKED	P. HRADILEK

ENGINEERING CERTIFICATION

REGISTERED PROFESSIONAL ENGINEER LANCE M. JONES 98374 Exp. 6-30-15 CIVIL STATE OF CALIFORNIA

PRELIMINARY

PROJECT ENGINEER DATE

SAN FRANCISQUITO CREEK JOINT POWERS AUTHORITY

ACCEPTED BY DISTRICT

PROJECT ENGINEER DATE

PROJECT NAME AND SHEET DESCRIPTION:

SAN FRANCISQUITO CREEK FLOOD REDUCTION, ECOSYSTEM RESTORATION, & RECREATION PROJECT

LEVEE ALIGNMENT RIGHT BANK AND LEFT BANK LINE AND CURVE PLAN

SCALE: 1" = 100'

VERIFY SCALES: 0 — 1"

BAR IS ONE INCH ON ORIGINAL DRAWING IF NOT ONE INCH ON THIS SHEET, ADJUST SCALES ACCORDINGLY

PROJECT NUMBER: 26284002

SHEET CODE: G-10

SHEET NUMBER: 10 OF 119

FOR CONTINUATION SEE SHEET G-10

NOTE:

1. SEE SHEET G-12 FOR R-LINE AND L-LINE LINE AND CURVE TABLES.
2. SEE SHEET G-13 FOR CREEK C-LINE LINE AND CURVE TABLES.

LEVEEE ALIGNMENT RIGHT BANK AND LEFT BANK LINE AND CURVE PLAN

SCALE: 1"=100'

USERNAME: BillShad Tue 08 Jul 2008 09:32am
FILENAME: C:\pwworking\sac\d0171341\G-11

DOCUMENT NUMBER: SFC_LP-G-1028-XXXXXXX

REV	DESCRIPTION	DATE	APPR.
	DRAFT 100% AUGUST 2014		

HDR Engineering, Inc.

DATE JULY 2014
DESIGN L. JONES
DRAWN H. SUAREZ
CHECKED P. HRADILEK

ENGINEERING CERTIFICATION
REGISTERED PROFESSIONAL ENGINEER LANCE M. JONES 68372 Exp. 12-30-15 CIVIL STATE OF CALIFORNIA
PRELIMINARY
PROJECT ENGINEER DATE

SAN FRANCISQUITO CREEK JOINT POWERS AUTHORITY
ACCEPTED BY DISTRICT
PROJECT ENGINEER DATE

PROJECT NAME AND SHEET DESCRIPTION:
SAN FRANCISQUITO CREEK FLOOD REDUCTION, ECOSYSTEM RESTORATION, & RECREATION PROJECT
LEVEE ALIGNMENT RIGHT BANK AND LEFT BANK LINE AND CURVE PLAN

SCALE 1" = 100'
VERIFY SCALES 0 1"
BAR IS ONE INCH ON ORIGINAL DRAWING IF NOT ONE INCH ON THIS SHEET, ADJUST SCALES ACCORDINGLY

PROJECT NUMBER 26284002
SHEET CODE: G-11
SHEET NUMBER: 11 OF 119

R–LINE ALIGNMENT LINE AND CURVE TABLE

NUMBER	START STA	END STA	CURVE PI	LENGTH	DELTA	RADIUS	LINE/CHORD BRNG	START POINT COORDINATE	END POINT COORDINATE
L1	0+00.00	3+41.60	N/A	341.60'	N/A	N/A	S63°03'29"W	N 1996216.61, E 6092669.04	N 1996061.84, E 6092364.52
C1	3+41.60	3+70.40	3+56.03	28.81'	8°15'10"	200.00'	S67°11'04"W	N 1996061.84, E 6092364.52	N 1996050.68, E 6092337.99
L2	3+70.40	4+82.41	N/A	112.01'	N/A	N/A	S71°18'39"W	N 1996050.68, E 6092337.99	N 1996014.79, E 6092231.89
C2	4+82.41	5+26.12	5+04.36	43.71'	12°31'22"	200.00'	S65°02'58"W	N 1996014.79, E 6092231.89	N 1995996.39, E 6092192.34
L3	5+26.12	6+65.21	N/A	139.08'	N/A	N/A	S58°47'17"W	N 1995996.39, E 6092192.34	N 1995924.31, E 6092073.38
C3	6+65.21	6+94.91	6+80.09	29.70'	8°30'32"	200.00'	S54°32'01"W	N 1995924.31, E 6092073.38	N 1995907.09, E 6092049.21
L4	6+94.91	11+27.10	N/A	432.19'	N/A	N/A	S50°16'45"W	N 1995907.09, E 6092049.21	N 1995630.90, E 6091716.79
C4	11+27.10	11+64.75	11+45.93	37.65'	2°09'26"	1000.00'	S49°12'02"W	N 1995630.90, E 6091716.79	N 1995606.30, E 6091688.29
L5	11+64.75	13+26.26	N/A	161.51'	N/A	N/A	S48°07'19"W	N 1995606.30, E 6091688.29	N 1995498.49, E 6091568.04
C5	13+26.26	13+64.64	13+45.46	38.38'	4°23'53"	500.00'	S50°19'15"W	N 1995498.49, E 6091568.04	N 1995473.99, E 6091538.50
L6	13+64.64	24+49.42	N/A	1084.78'	N/A	N/A	S52°31'12"W	N 1995473.99, E 6091538.50	N 1994813.92, E 6090677.66
C6	24+49.42	25+39.69	24+94.68	90.27'	10°20'40"	500.00'	S57°41'32"W	N 1994813.92, E 6090677.66	N 1994765.74, E 6090601.47
C7	25+39.69	26+15.53	25+77.68	75.84'	8°41'26"	500.00'	S58°31'09"W	N 1994765.74, E 6090601.47	N 1994726.17, E 6090536.85
L7	26+15.53	28+07.23	N/A	191.70'	N/A	N/A	S54°10'26"W	N 1994726.17, E 6090536.85	N 1994613.97, E 6090381.42
C8	28+07.23	30+28.19	29+27.54	220.96'	56°16'05"	225.00'	S26°02'24"W	N 1994613.97, E 6090381.42	N 1994423.31, E 6090288.27
L8	30+28.19	31+57.64	N/A	129.45'	N/A	N/A	S2°05'39"E	N 1994423.31, E 6090288.27	N 1994293.95, E 6090293.00
L9	31+57.64	34+06.07	N/A	248.43'	N/A	N/A	S12°54'31"E	N 1994293.95, E 6090293.00	N 1994051.79, E 6090348.50
C9	34+06.07	34+24.23	34+15.15	18.15'	0°06'14"	10000.00'	S12°51'24"E	N 1994051.79, E 6090348.50	N 1994034.10, E 6090352.54
L10	34+24.23	39+90.77	N/A	566.55'	N/A	N/A	S12°48'17"E	N 1994034.10, E 6090352.54	N 1993481.64, E 6090478.10
C10	39+90.77	41+33.74	40+62.63	142.97'	14°14'46"	575.00'	S19°55'40"E	N 1993481.64, E 6090478.10	N 1993347.58, E 6090526.71
C11	41+33.74	42+88.32	42+11.60	154.58'	16°58'01"	522.00'	S18°34'02"E	N 1993347.58, E 6090526.71	N 1993201.58, E 6090575.75
L11	42+88.32	43+45.13	N/A	56.81'	N/A	N/A	S10°05'02"E	N 1993201.58, E 6090575.75	N 1993145.64, E 6090585.70
C12	43+45.13	45+53.82	44+50.72	208.68'	21°32'37"	555.00'	S0°41'17"W	N 1993145.64, E 6090585.70	N 1992938.20, E 6090583.21
C13	45+53.82	48+18.53	46+88.06	264.71'	23°30'52"	645.00'	S0°17'51"E	N 1992938.20, E 6090583.21	N 1992675.35, E 6090584.57
L12	48+18.53	49+00.20	N/A	81.67'	N/A	N/A	S12°03'17"E	N 1992675.35, E 6090584.57	N 1992595.48, E 6090601.63
C14	49+00.20	49+68.65	49+34.48	68.45'	7°50'36"	500.00'	S15°58'35"E	N 1992595.48, E 6090601.63	N 1992529.73, E 6090620.45
L13	49+68.65	50+64.61	N/A	95.96'	N/A	N/A	S19°53'53"E	N 1992529.73, E 6090620.45	N 1992439.50, E 6090653.11
C15	50+64.61	51+32.48	50+98.60	67.88'	7°46'42"	500.00'	S23°47'14"E	N 1992439.50, E 6090653.11	N 1992377.43, E 6090680.47
L14	51+32.48	51+84.54	N/A	52.06'	N/A	N/A	S27°40'34"E	N 1992377.43, E 6090680.47	N 1992331.33, E 6090704.65
C16	51+84.54	52+18.33	52+01.44	33.78'	3°49'58"	505.00'	S25°45'35"E	N 1992331.33, E 6090704.65	N 1992300.91, E 6090719.33
L15	52+18.33	53+52.00	N/A	133.67'	N/A	N/A	S23°50'36"E	N 1992300.91, E 6090719.33	N 1992178.65, E 6090773.36
C17	53+52.00	56+48.48	55+07.42	296.48'	42°28'04"	400.00'	S2°36'35"E	N 1992178.65, E 6090773.36	N 1991889.21, E 6090786.56
L16	56+48.48	56+84.61	N/A	36.14'	N/A	N/A	S18°37'27"W	N 1991889.21, E 6090786.56	N 1991854.96, E 6090775.01
C18	56+84.61	58+53.03	57+73.41	168.42'	44°52'57"	215.00'	S41°03'56"W	N 1991854.96, E 6090775.01	N 1991731.20, E 6090667.18
L17	58+53.03	62+68.91	N/A	415.87'	N/A	N/A	S63°30'24"W	N 1991731.20, E 6090667.18	N 1991545.69, E 6090294.98
C19	62+68.91	64+82.07	63+84.69	213.16'	55°30'52"	220.00'	N88°44'10"W	N 1991545.69, E 6090294.98	N 1991550.21, E 6090090.11
L18	64+82.07	69+79.19	N/A	497.12'	N/A	N/A	N60°58'44"W	N 1991550.21, E 6090090.11	N 1991791.38, E 6089655.41
C20	69+79.19	73+00.40	71+60.09	321.22'	65°43'47"	280.00'	S86°09'23"W	N 1991791.38, E 6089655.41	N 1991771.00, E 6089352.20
L19	73+00.40	73+84.19	N/A	83.79'	N/A	N/A	S53°17'29"W	N 1991771.00, E 6089352.20	N 1991720.92, E 6089285.03
C21	73+84.19	75+34.05	74+60.72	149.86'	28°37'13"	300.00'	S38°58'53"W	N 1991720.92, E 6089285.03	N 1991605.64, E 6089191.74
L20	75+34.05	75+54.13	N/A	20.08'	N/A	N/A	S24°40'16"W	N 1991605.64, E 6089191.74	N 1991587.39, E 6089183.36

L–LINE ALIGNMENT LINE AND CURVE TABLE

NUMBER	START STA	END STA	CURVE PI	LENGTH	DELTA	RADIUS	LINE/CHORD BRNG	START POINT COORDINATE	END POINT COORDINATE
L101	6+00.00	6+97.21	N/A	97.21'	N/A	N/A	S57°48'42"W	N 1995830.02, E 6092298.02	N 1995778.23, E 6092215.76
C101	6+97.21	8+15.37	7+56.36	118.16'	6°56'37"	975.00'	S54°20'24"W	N 1995778.23, E 6092215.76	N 1995709.39, E 6092119.81
L102	8+15.37	11+59.49	N/A	344.13'	N/A	N/A	S50°52'05"W	N 1995709.39, E 6092119.81	N 1995492.21, E 6091852.88
C102	11+59.49	13+07.04	12+33.27	147.54'	1°35'42"	5300.00'	S51°39'56"W	N 1995492.21, E 6091852.88	N 1995400.70, E 6091737.15
L103	13+07.04	22+68.48	N/A	961.44'	N/A	N/A	S52°27'47"W	N 1995400.70, E 6091737.15	N 1994814.92, E 6090974.76
C103	22+68.48	27+95.00	25+42.36	526.53'	38°55'34"	775.00'	S33°00'00"W	N 1994814.92, E 6090974.76	N 1994381.78, E 6090693.48
L104	27+95.00	28+83.91	N/A	88.90'	N/A	N/A	S13°32'13"W	N 1994381.78, E 6090693.48	N 1994295.35, E 6090672.67
C104	28+83.91	33+51.84	31+22.42	467.94'	27°21'29"	980.00'	S0°08'31"E	N 1994295.35, E 6090672.67	N 1993831.85, E 6090673.81
L105	33+51.84	36+09.03	N/A	257.19'	N/A	N/A	S13°49'15"E	N 1993831.85, E 6090673.81	N 1993582.10, E 6090735.25
C105	36+09.03	36+99.50	36+54.44	90.47'	12°20'30"	420.00'	S19°59'30"E	N 1993582.10, E 6090735.25	N 1993497.25, E 6090766.12
C106	36+99.50	39+61.13	38+31.09	261.63'	15°08'31"	990.00'	S18°35'30"E	N 1993497.25, E 6090766.12	N 1993249.99, E 6090849.30
L106	39+61.13	40+13.47	N/A	52.34'	N/A	N/A	S11°01'15"E	N 1993249.99, E 6090849.30	N 1993198.62, E 6090859.30
C107	40+13.47	43+25.27	41+71.10	311.80'	20°46'22"	860.00'	S0°38'04"E	N 1993198.62, E 6090859.30	N 1992888.55, E 6090862.74
C108	43+25.27	45+58.33	44+44.47	233.06'	29°40'26"	450.00'	S5°05'06"E	N 1992888.55, E 6090862.74	N 1992658.99, E 6090883.16
L107	45+58.33	48+62.28	N/A	303.95'	N/A	N/A	S19°55'20"E	N 1992658.99, E 6090883.16	N 1992373.23, E 6090986.73
C109	48+62.28	49+64.97	49+13.70	102.69'	7°50'41"	750.00'	S15°59'59"E	N 1992373.23, E 6090986.73	N 1992274.60, E 6091015.01
L108	49+64.97	50+58.94	N/A	93.98'	N/A	N/A	S12°04'39"E	N 1992274.60, E 6091015.01	N 1992182.70, E 6091034.68
C110	50+58.94	58+63.84	55+32.13	804.90'	75°36'08"	610.00'	S25°43'26"W	N 1992182.70, E 6091034.68	N 1991509.04, E 6090710.12
L109	58+63.84	61+06.33	N/A	242.48'	N/A	N/A	S63°30'28"W	N 1991509.04, E 6090710.12	N 1991400.87, E 6090493.10
C111	61+06.33	63+00.00	62+04.14	193.67'	19°48'56"	560.00'	S73°24'56"W	N 1991400.87, E 6090493.10	N 1991345.87, E 6090308.41
C112	63+00.00	63+78.20	63+39.21	78.20'	10°17'07"	435.65'	S88°27'57"W	N 1991345.87, E 6090308.41	N 1991343.78, E 6090230.34
L110	63+78.20	63+99.88	N/A	21.68'	N/A	N/A	N86°23'29"W	N 1991343.78, E 6090230.34	N 1991345.14, E 6090208.70
C113	63+99.88	66+85.80	65+46.03	285.92'	29°15'12"	560.00'	N71°45'53"W	N 1991345.14, E 6090208.70	N 1991433.64, E 6089940.08
L111	66+85.80	67+28.01	N/A	42.21'	N/A	N/A	N47°16'54"W	N 1991433.64, E 6089940.08	N 1991462.28, E 6089909.07
L112	67+28.01	67+78.70	N/A	50.68'	N/A	N/A	N61°25'11"W	N 1991462.28, E 6089909.07	N 1991486.53, E 6089864.56
L113	67+78.70	68+07.25	N/A	28.55'	N/A	N/A	N75°27'51"W	N 1991486.53, E 6089864.56	N 1991493.69, E 6089836.92
L114	68+07.25	69+94.99	N/A	187.73'	N/A	N/A	S71°48'23"W	N 1991493.69, E 6089836.92	N 1991435.08, E 6089658.57
L115	69+94.99	70+45.67	N/A	50.69'	N/A	N/A	N18°52'16"W	N 1991435.08, E 6089658.57	N 1991483.04, E 6089642.18
L116	70+45.67	71+04.64	N/A	58.96'	N/A	N/A	S70°10'17"W	N 1991483.04, E 6089642.18	N 1991463.04, E 6089586.71
L117	71+04.64	71+48.24	N/A	43.61'	N/A	N/A	N19°18'01"W	N 1991463.04, E 6089586.71	N 1991504.20, E 6089572.30
L118	71+48.24	71+88.97	N/A	40.73'	N/A	N/A	S71°20'36"W	N 1991504.20, E 6089572.30	N 1991491.17, E 6089533.71
L119	71+88.97	72+14.13	N/A	25.16'	N/A	N/A	N54°10'38"W	N 1991491.17, E 6089533.71	N 1991505.89, E 6089513.31
C114	72+14.13	72+65.05	72+40.22	50.92'	30°43'02"	94.97'	N38°49'07"W	N 1991505.89, E 6089513.31	N 1991545.09, E 6089481.77
C115	72+65.05	73+51.59	73+09.70	86.55'	34°48'28"	142.46'	N6°03'21"W	N 1991545.09, E 6089481.77	N 1991629.83, E 6089472.78
L120	73+51.59	73+70.19	N/A	18.60'	N/A	N/A	N11°20'53"E	N 1991629.83, E 6089472.78	N 1991648.07, E 6089476.44
C116	73+70.19	75+94.35	74+95.69	224.15'	64°12'56"	200.00'	S56°46'45"W	N 1991648.07, E 6089476.44	N 1991531.59, E 6089298.58
L121	75+94.35	76+18.57	N/A	24.22'	N/A	N/A	S24°40'16"W	N 1991531.59, E 6089298.58	N 1991509.58, E 6089288.47

USERNAME: BillShad Tue 08 Jul 2008 09:32am
FILENAME: C:\pwworking\sac\d0171341\G-12
USE FILE
DOCUMENT NUMBER: SFC_LP-G-1028-XXXXXXX

REV	DESCRIPTION	DATE	APPR.
	DRAFT 100% AUGUST 2014		

HDR Engineering, Inc.

DATE JULY 2014
DESIGN L. JONES
DRAWN H. SUAREZ
CHECKED P. HRADILEK

ENGINEERING CERTIFICATION
REGISTERED PROFESSIONAL ENGINEER LANCE M. JONES 68374 Exp. 09-30-15 CIVIL STATE OF CALIFORNIA
PRELIMINARY
PROJECT ENGINEER DATE

SAN FRANCISQUITO CREEK JOINT POWERS AUTHORITY
ACCEPTED BY DISTRICT
PROJECT ENGINEER DATE

PROJECT NAME AND SHEET DESCRIPTION:
SAN FRANCISQUITO CREEK FLOOD REDUCTION, ECOSYSTEM RESTORATION, & RECREATION PROJECT
LEVEE ALIGNMENT RIGHT BANK AND LEFT BANK LINE AND CURVE TABLE

SCALE NONE
VERIFY SCALES 0 1"
BAR IS ONE INCH ON ORIGINAL DRAWING IF NOT ONE INCH ON THIS SHEET, ADJUST SCALES ACCORDINGLY

PROJECT NUMBER 26284002
SHEET CODE: G-12
SHEET NUMBER: 12 OF 119

C-LINE ALIGNMENT LINE AND CURVE TABLE

NUMBER	START STA	END STA	CURVE PI	LENGTH	DELTA	RADIUS	LINE/CHORD BRNG	START POINT COORDINATE	END POINT COORDINATE
L201	0+00.00	4+78.56	N/A	478.56'	N/A	N/A	S76°36'38"W	N 1996095.83, E 6092828.64	N 1995985.01, E 6092363.09
C201	4+78.56	8+26.26	6+56.36	347.71'	29°30'51"	675.00'	S61°51'12"W	N 1995985.01, E 6092363.09	N 1995822.80, E 6092059.88
C202	8+26.26	28+08.86	18+20.31	1982.60'	10°25'23"	10898.51'	S52°18'26"W	N 1995822.80, E 6092059.88	N 1994612.25, E 6090493.21
C203	28+08.86	31+24.36	29+91.05	315.49'	71°43'54"	252.00'	S21°39'08"W	N 1994612.25, E 6090493.21	N 1994337.80, E 6090384.26
L202	31+24.36	32+74.51	N/A	150.15'	N/A	N/A	S14°12'49"E	N 1994337.80, E 6090384.26	N 1994192.24, E 6090421.13
C204	32+74.51	33+22.40	32+98.47	47.89'	5°29'16"	500.00'	S16°57'28"E	N 1994192.24, E 6090421.13	N 1994146.45, E 6090435.09
C205	33+22.40	33+72.59	33+47.52	50.19'	5°45'05"	500.00'	S16°49'33"E	N 1994146.45, E 6090435.09	N 1994098.42, E 6090449.61
L203	33+72.59	34+80.44	N/A	107.85'	N/A	N/A	S13°57'00"E	N 1994098.42, E 6090449.61	N 1993993.76, E 6090475.61
C206	34+80.44	35+23.36	35+01.91	42.92'	4°55'07"	500.00'	S11°29'27"E	N 1993993.76, E 6090475.61	N 1993951.71, E 6090484.16
C207	35+23.36	35+68.58	35+45.99	45.22'	5°10'56"	500.00'	S11°37'21"E	N 1993951.71, E 6090484.16	N 1993907.43, E 6090493.27
L204	35+68.58	39+47.76	N/A	379.18'	N/A	N/A	S14°12'49"E	N 1993907.43, E 6090493.27	N 1993539.86, E 6090586.37
C208	39+47.76	41+45.19	40+46.51	197.43'	3°46'14"	3000.00'	S16°05'56"E	N 1993539.86, E 6090586.37	N 1993350.21, E 6090641.11
L205	41+45.19	41+93.51	N/A	48.32'	N/A	N/A	S17°59'04"E	N 1993350.21, E 6090641.11	N 1993304.24, E 6090656.03
C209	41+93.51	44+92.11	43+46.59	298.59'	31°06'20"	550.00'	S2°25'53"E	N 1993304.24, E 6090656.03	N 1993009.57, E 6090668.54
L206	44+92.11	45+81.82	N/A	89.72'	N/A	N/A	S13°07'17"W	N 1993009.57, E 6090668.54	N 1992922.19, E 6090648.17
C210	45+81.82	46+66.95	46+24.60	85.13'	13°56'08"	350.00'	S6°09'13"W	N 1992922.19, E 6090648.17	N 1992837.77, E 6090639.07
L207	46+66.95	47+46.57	N/A	79.62'	N/A	N/A	S0°48'52"E	N 1992837.77, E 6090639.07	N 1992758.16, E 6090640.20
C211	47+46.57	50+41.72	48+98.08	295.15'	31°54'25"	530.00'	S16°46'04"E	N 1992758.16, E 6090640.20	N 1992479.20, E 6090724.25
L208	50+41.72	53+30.28	N/A	288.57'	N/A	N/A	S32°43'16"E	N 1992479.20, E 6090724.25	N 1992236.42, E 6090880.24
C212	53+30.28	56+85.98	55+18.50	355.70'	46°19'07"	440.00'	S9°33'43"E	N 1992236.42, E 6090880.24	N 1991895.14, E 6090937.73
L209	56+85.98	57+75.57	N/A	89.59'	N/A	N/A	S13°35'51"W	N 1991895.14, E 6090937.73	N 1991808.06, E 6090916.67
C213	57+75.57	58+20.31	57+98.54	44.74'	32°02'23"	80.00'	S29°37'02"W	N 1991808.06, E 6090916.67	N 1991769.68, E 6090894.85
L210	58+20.31	59+44.51	N/A	124.21'	N/A	N/A	S45°38'14"W	N 1991769.68, E 6090894.85	N 1991682.83, E 6090806.05
C214	59+44.51	61+43.06	60+46.17	198.54'	30°20'06"	375.00'	S60°48'17"W	N 1991682.83, E 6090806.05	N 1991587.11, E 6090634.74
L211	61+43.06	62+23.42	N/A	80.36'	N/A	N/A	S75°58'20"W	N 1991587.11, E 6090634.74	N 1991567.63, E 6090556.78
C215	62+23.42	62+93.28	62+58.51	69.86'	13°20'35"	300.00'	S69°18'02"W	N 1991567.63, E 6090556.78	N 1991542.99, E 6090491.57
L212	62+93.28	64+67.62	N/A	174.34'	N/A	N/A	S62°37'44"W	N 1991542.99, E 6090491.57	N 1991462.84, E 6090336.75
C216	64+67.62	67+79.50	66+39.31	311.88'	59°33'54"	300.00'	N87°35'19"W	N 1991462.84, E 6090336.75	N 1991475.38, E 6090038.99
L213	67+79.50	69+35.65	N/A	156.15'	N/A	N/A	N57°48'22"W	N 1991475.38, E 6090038.99	N 1991558.58, E 6089906.85
C217	69+35.65	70+63.22	69+99.55	127.57'	8°35'56"	850.00'	N53°30'24"W	N 1991558.58, E 6089906.85	N 1991634.37, E 6089804.39
L214	70+63.22	71+51.73	N/A	88.51'	N/A	N/A	N49°12'26"W	N 1991634.37, E 6089804.39	N 1991692.20, E 6089737.38
C218	71+51.73	72+05.11	71+78.77	53.38'	22°39'16"	135.00'	N60°32'04"W	N 1991692.20, E 6089737.38	N 1991718.29, E 6089691.21
L215	72+05.11	73+18.41	N/A	113.30'	N/A	N/A	N71°51'42"W	N 1991718.29, E 6089691.21	N 1991753.56, E 6089583.54
C219	73+18.41	74+26.72	73+74.08	108.30'	32°39'35"	190.00'	N88°11'29"W	N 1991753.56, E 6089583.54	N 1991756.93, E 6089476.75
L216	74+26.72	75+33.64	N/A	106.93'	N/A	N/A	S75°28'43"W	N 1991756.93, E 6089476.75	N 1991730.12, E 6089373.23
C220	75+33.64	76+19.61	75+78.57	85.97'	41°02'53"	120.00'	S54°57'17"W	N 1991730.12, E 6089373.23	N 1991681.80, E 6089304.35
L217	76+19.61	77+71.49	N/A	151.87'	N/A	N/A	S34°25'50"W	N 1991681.80, E 6089304.35	N 1991556.54, E 6089218.48

USERNAME: BillShad Tue 08 Jul 2008 09:32am
FILENAME: C:\pwworking\sac\d0171341\G-13

DOCUMENT NUMBER: SFC_LP-G-1028-XXXXXXX

REV	DESCRIPTION	DATE	APPR.
	DRAFT 100% AUGUST 2014		

HDR Engineering, Inc.

DATE: JULY 2014
DESIGN: L. JONES
DRAWN: H. SUAREZ
CHECKED: P. HRADILEK

ENGINEERING CERTIFICATION
REGISTERED PROFESSIONAL ENGINEER LANCE M. JONES 6337 Exp. 12-30-15 CIVIL STATE OF CALIFORNIA
PRELIMINARY
PROJECT ENGINEER DATE

SAN FRANCISQUITO CREEK
JOINT POWERS AUTHORITY

ACCEPTED BY DISTRICT
PROJECT ENGINEER DATE

PROJECT NAME AND SHEET DESCRIPTION:
SAN FRANCISQUITO CREEK FLOOD REDUCTION, ECOSYSTEM RESTORATION, & RECREATION PROJECT
SAN FRANCISQUITO CREEK C-LINE LINE AND CURVE TABLE

SCALE: NONE
VERIFY SCALES: 0 1"
BAR IS ONE INCH ON ORIGINAL DRAWING IF NOT ONE INCH ON THIS SHEET, ADJUST SCALES ACCORDINGLY

PROJECT NUMBER: 26284002
SHEET CODE: G-13
SHEET NUMBER: 13 OF 119

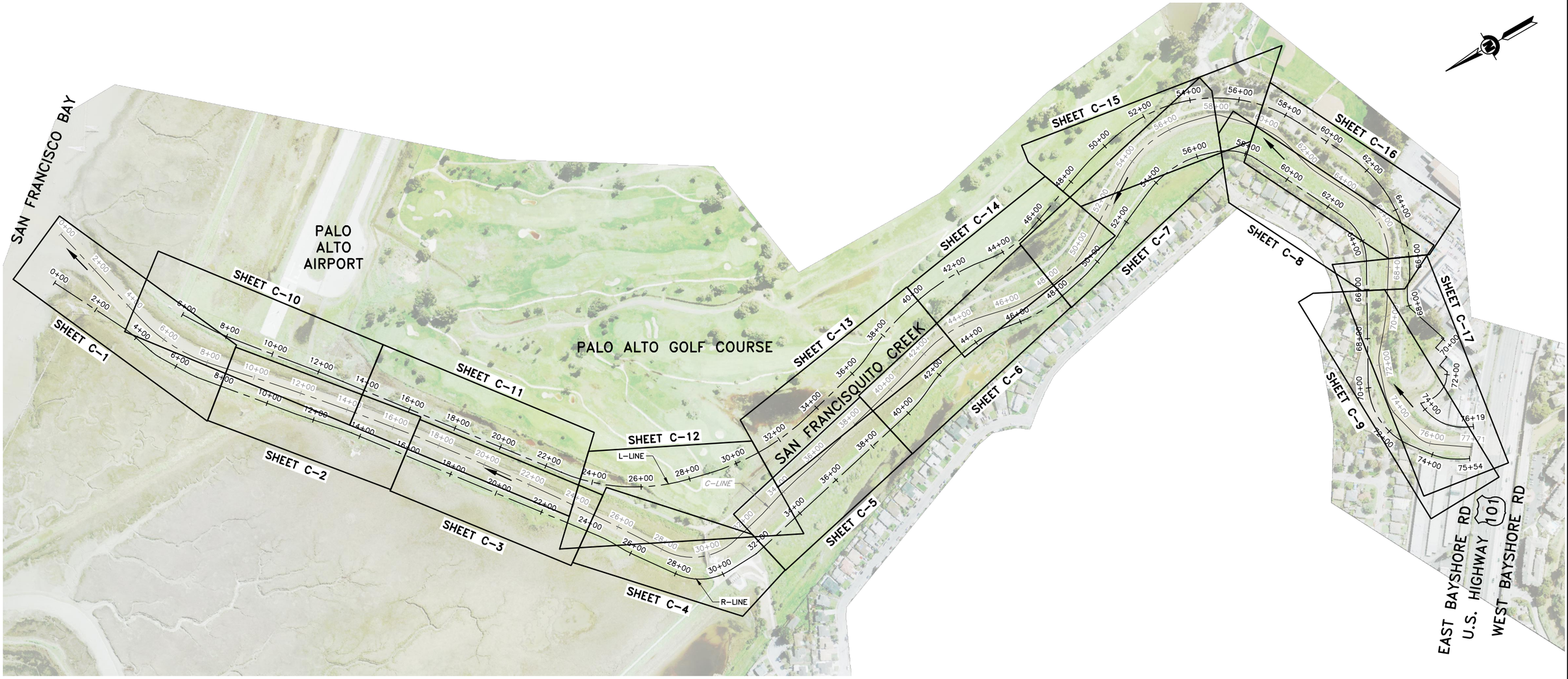

LEVEE STATIONING AND SHEET LAYOUT PLAN

SCALE: 1"=200'

USERNAME: BillShad Tue 08 Jul 2008 09:32am
FILENAME: C:\pwworking\sac\d0171341\G-14

DOCUMENT NUMBER: SFC_LP-G-1028-XXXXXXX

REV	DESCRIPTION	DATE	APPR.
	DRAFT 100% AUGUST 2014		

HDR Engineering, Inc.

DATE: JULY 2014
DESIGN: L. JONES
DRAWN: H. SUAREZ
CHECKED: P. HRADILEK

ENGINEERING CERTIFICATION
REGISTERED PROFESSIONAL ENGINEER LANCE M. JONES 68372 Exp. 12-30-15 CIVIL STATE OF CALIFORNIA
PRELIMINARY
PROJECT ENGINEER DATE

SAN FRANCISQUITO CREEK JOINT POWERS AUTHORITY
ACCEPTED BY DISTRICT
PROJECT ENGINEER DATE

PROJECT NAME AND SHEET DESCRIPTION:
SAN FRANCISQUITO CREEK FLOOD REDUCTION, ECOSYSTEM RESTORATION, & RECREATION PROJECT
LEVEE STATIONING AND SHEET LAYOUT PLAN

SCALE: 1" = 200'
VERIFY SCALES: 0 1"
BAR IS ONE INCH ON ORIGINAL DRAWING IF NOT ONE INCH ON THIS SHEET, ADJUST SCALES ACCORDINGLY

PROJECT NUMBER: 26284002
SHEET CODE: G-14
SHEET NUMBER: 14 OF 119

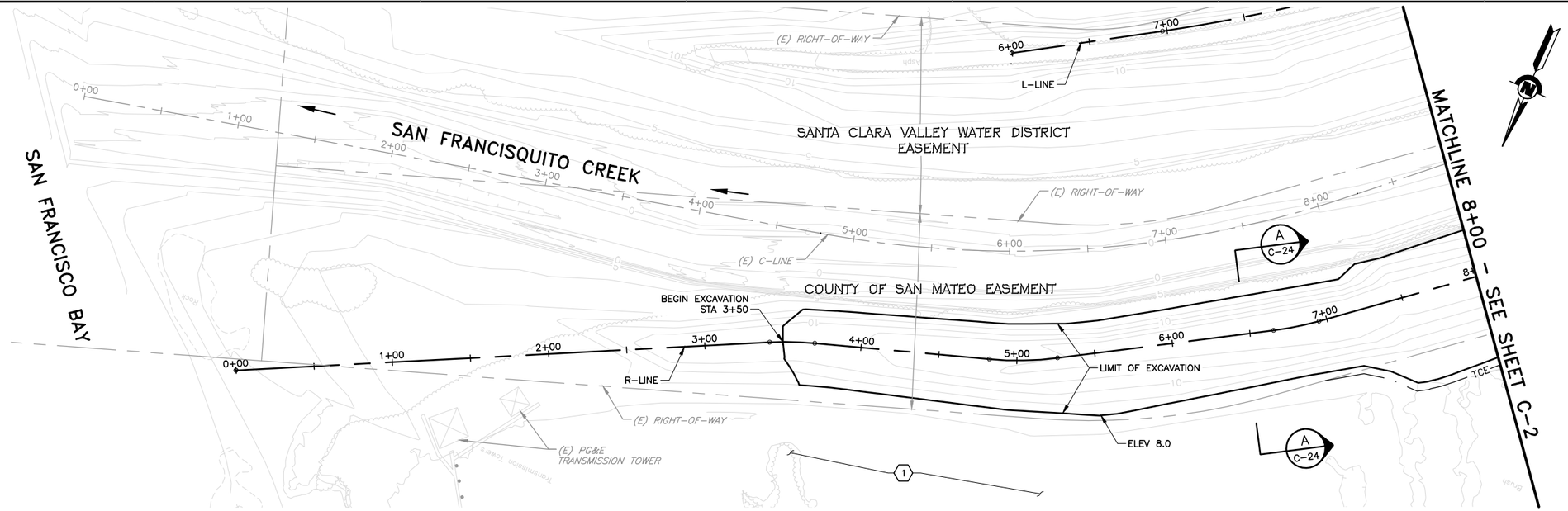

KEY NOTE:

1 EXISTING TIDAL MARSH AREA, DO NOT DISTURB.

PLAN

SCALE: 1"=40'

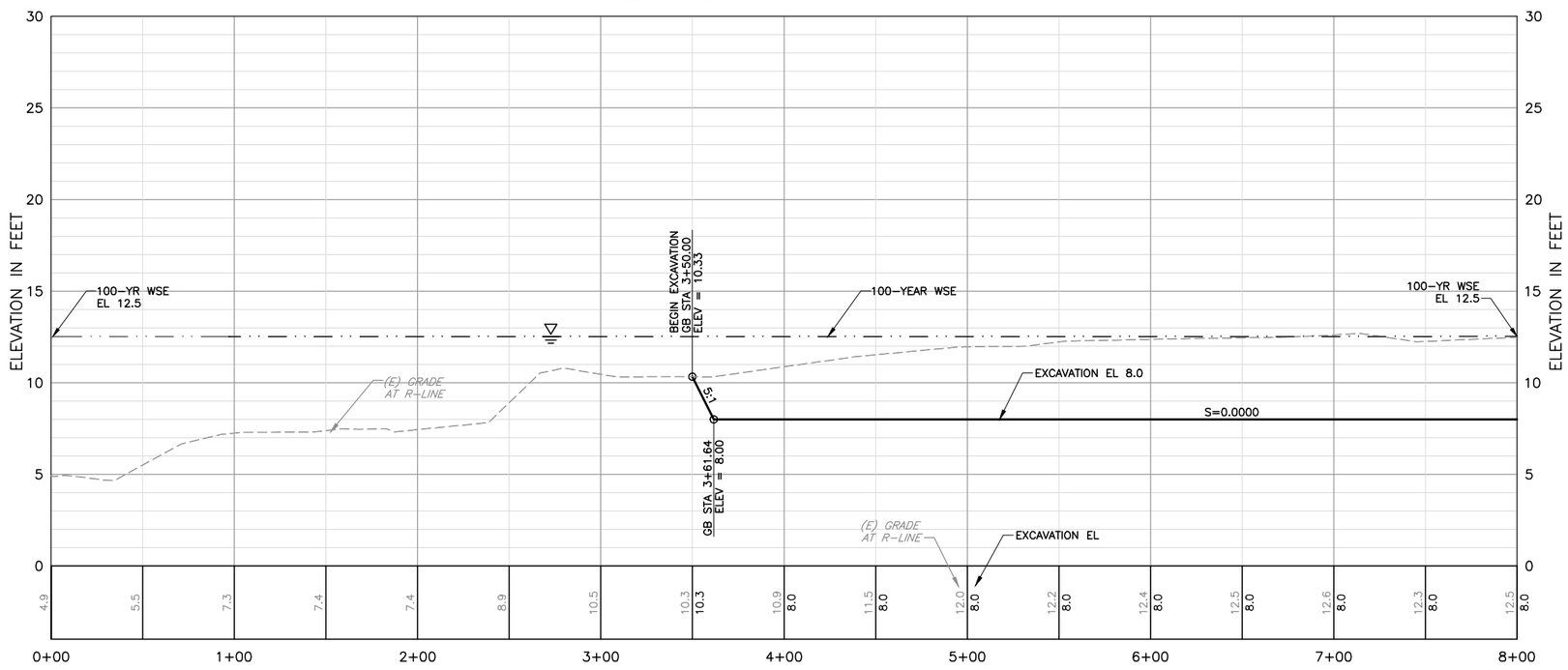

PROFILE

HORIZ: 1"=40'
VERT: 1"=4'

REV	DESCRIPTION	DATE	APPR.
	DRAFT 100% AUGUST 2014		

HDR Engineering, Inc.

DATE: JULY 2014
DESIGN: L. JONES
DRAWN: H. SUAREZ
CHECKED: B. JOHNSON

ENGINEERING CERTIFICATION
REGISTERED PROFESSIONAL ENGINEER LANCE M. JONES 66372 Exp. 06-30-15 CIVIL STATE OF CALIFORNIA
PRELIMINARY
PROJECT ENGINEER DATE

SAN FRANCISQUITO CREEK JOINT POWERS AUTHORITY
ACCEPTED BY DISTRICT
PROJECT ENGINEER DATE

PROJECT NAME AND SHEET DESCRIPTION:
SAN FRANCISQUITO CREEK FLOOD REDUCTION, ECOSYSTEM RESTORATION, & RECREATION PROJECT
PLAN AND PROFILE – (R-LINE)
STATION 0+00 TO 8+00

SCALE: AS SHOWN
VERIFY SCALES: 0 1"
BAR IS ONE INCH ON ORIGINAL DRAWING IF NOT ONE INCH ON THIS SHEET, ADJUST SCALES ACCORDINGLY

PROJECT NUMBER: 26284002
SHEET CODE: C-1
SHEET NUMBER: 15 OF 119

DOCUMENT NUMBER: SFC_LP-C-1028-XXXXXXX

USERNAME: BillShad Tue 08 Jul 2008 09:32am
FILENAME: C:\pwworking\sac\d0171341\C-01

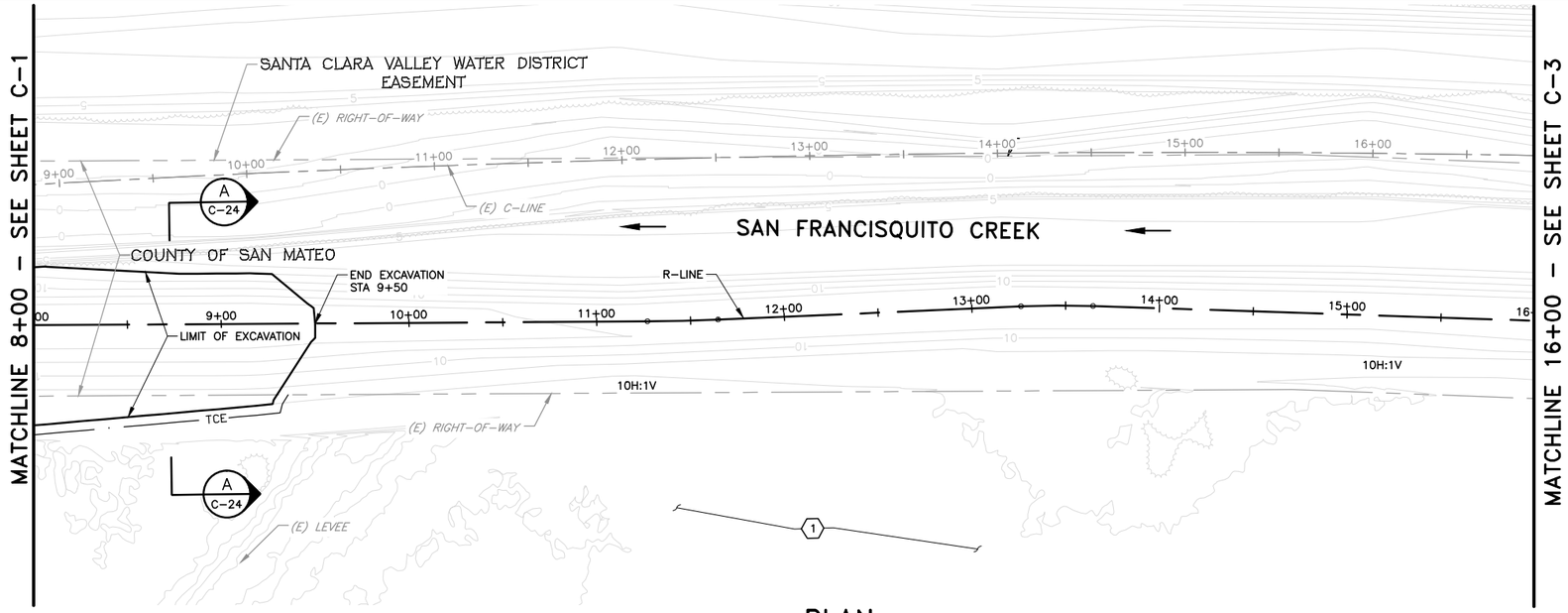

PLAN

SCALE: 1"=40'

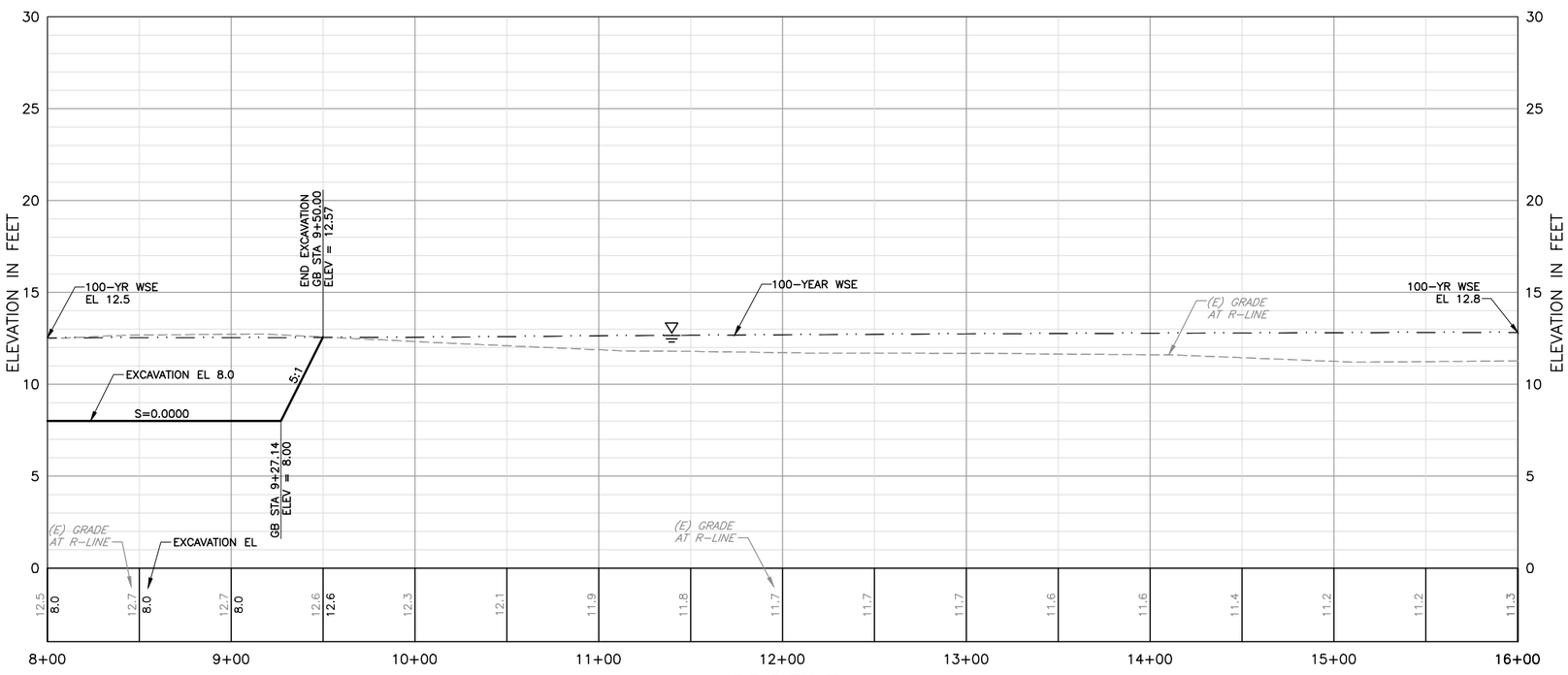

PROFILE

HORIZ: 1"=40'
VERT: 1"=4'

KEY NOTE:

1. EXISTING TIDAL MARSH AREA, DO NOT DISTURB.

USERNAME: BillShad Tue 08 Jul 2008 09:32am
FILENAME: C:\pwworking\sac\d0171341\C-02

DOCUMENT NUMBER: SFC_LP-C-1028-XXXXXXX

REV	DESCRIPTION	DATE	APPR.
	DRAFT 100% AUGUST 2014		

HDR Engineering, Inc.

DATE	
JULY 2014	
DESIGN	L. JONES
DRAWN	H. SUAREZ
CHECKED	P. HRADILEK

ENGINEERING CERTIFICATION: REGISTERED PROFESSIONAL ENGINEER LANCE M. JONES 68374 Exp. 12-30-15 CIVIL STATE OF CALIFORNIA — PRELIMINARY

PROJECT ENGINEER 07-20-10

SAN FRANCISQUITO CREEK JOINT POWERS AUTHORITY

ACCEPTED BY DISTRICT

PROJECT ENGINEER DATE

PROJECT NAME AND SHEET DESCRIPTION:

SAN FRANCISQUITO CREEK FLOOD REDUCTION, ECOSYSTEM RESTORATION, & RECREATION PROJECT

PLAN AND PROFILE – (R-LINE)
STATION 8+00 TO 16+00

SCALE	PROJECT NUMBER
AS SHOWN	26284002
VERIFY SCALES 0 1" BAR IS ONE INCH ON ORIGINAL DRAWING IF NOT ONE INCH ON THIS SHEET, ADJUST SCALES ACCORDINGLY	SHEET CODE: C-2

SHEET NUMBER: 16 OF 119

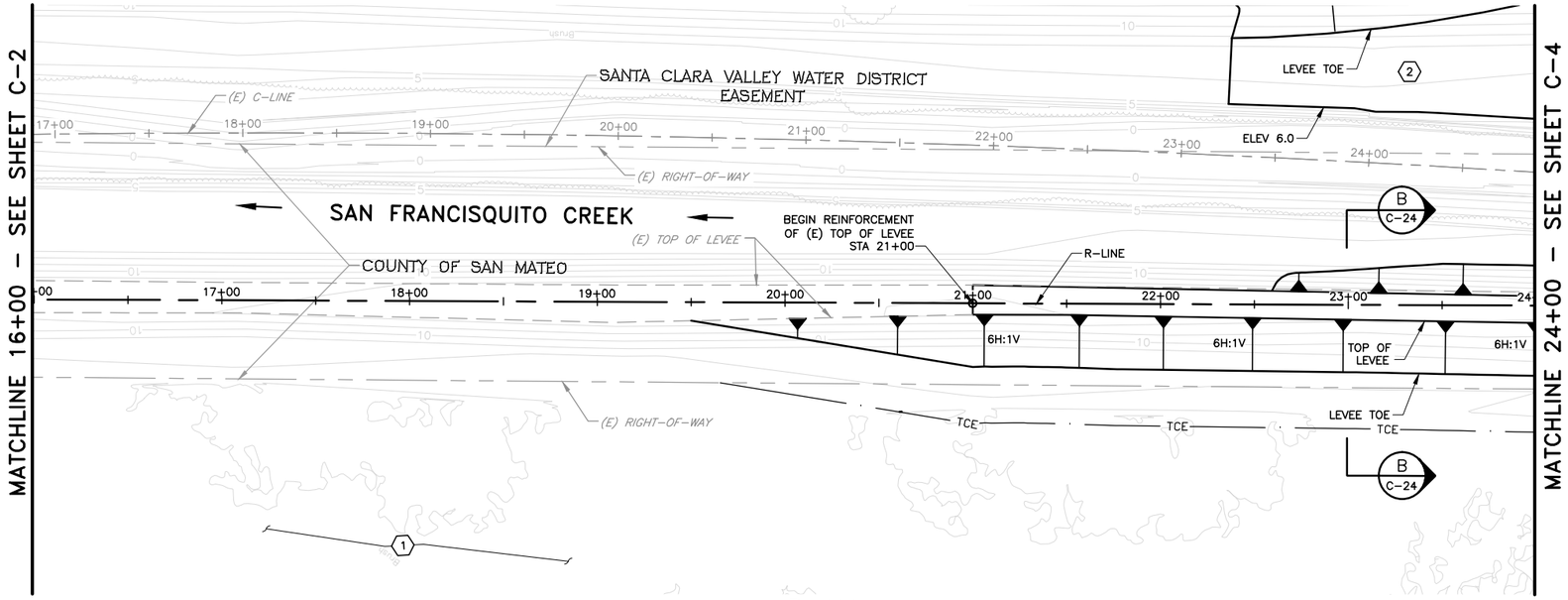

PLAN

SCALE: 1"=40'

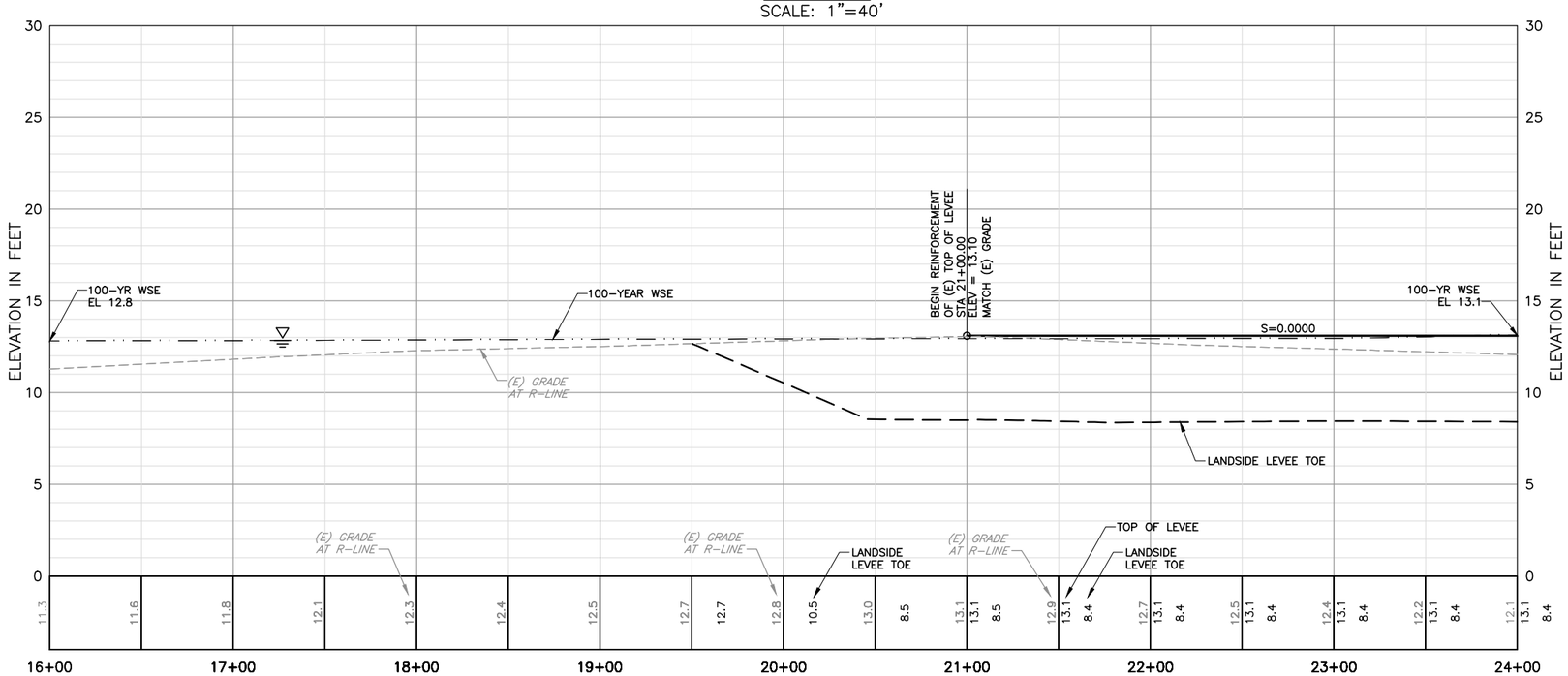

PROFILE

HORIZ: 1"=40'
VERT: 1"=4'

KEY NOTE:

1. EXISTING TIDAL MARSH AREA, DO NOT DISTURB.
2. CONSTRUCT BENCH WITHIN CREEK. SEE SHEET X-6.

REV	DESCRIPTION	DATE	APPR.
	DRAFT 100% AUGUST 2014		

HDR Engineering, Inc.

DATE: JULY 2014
DESIGN: L. JONES
DRAWN: H. SUAREZ
CHECKED: P. HRADILEK

ENGINEERING CERTIFICATION: REGISTERED PROFESSIONAL ENGINEER LANCE M. JONES 68372 Exp. 03-30-15 CIVIL STATE OF CALIFORNIA — PRELIMINARY

PROJECT ENGINEER DATE

SAN FRANCISQUITO CREEK JOINT POWERS AUTHORITY

ACCEPTED BY DISTRICT

PROJECT ENGINEER DATE

PROJECT NAME AND SHEET DESCRIPTION:

SAN FRANCISQUITO CREEK FLOOD REDUCTION, ECOSYSTEM RESTORATION, & RECREATION PROJECT

PLAN AND PROFILE – (R-LINE)
STATION 16+00 TO 24+00

SCALE: AS SHOWN
VERIFY SCALES: 0 1"
BAR IS ONE INCH ON ORIGINAL DRAWING IF NOT ONE INCH ON THIS SHEET, ADJUST SCALES ACCORDINGLY

PROJECT NUMBER: 26284002
SHEET CODE: C-3
SHEET NUMBER: 17 OF 119

DOCUMENT NUMBER: SFC_LP-C-1028-XXXXXXX

USERNAME: BillShad Tue 08 Jul 2008 09:32am
FILENAME: C:\pwworking\sac\d0171341\C-03

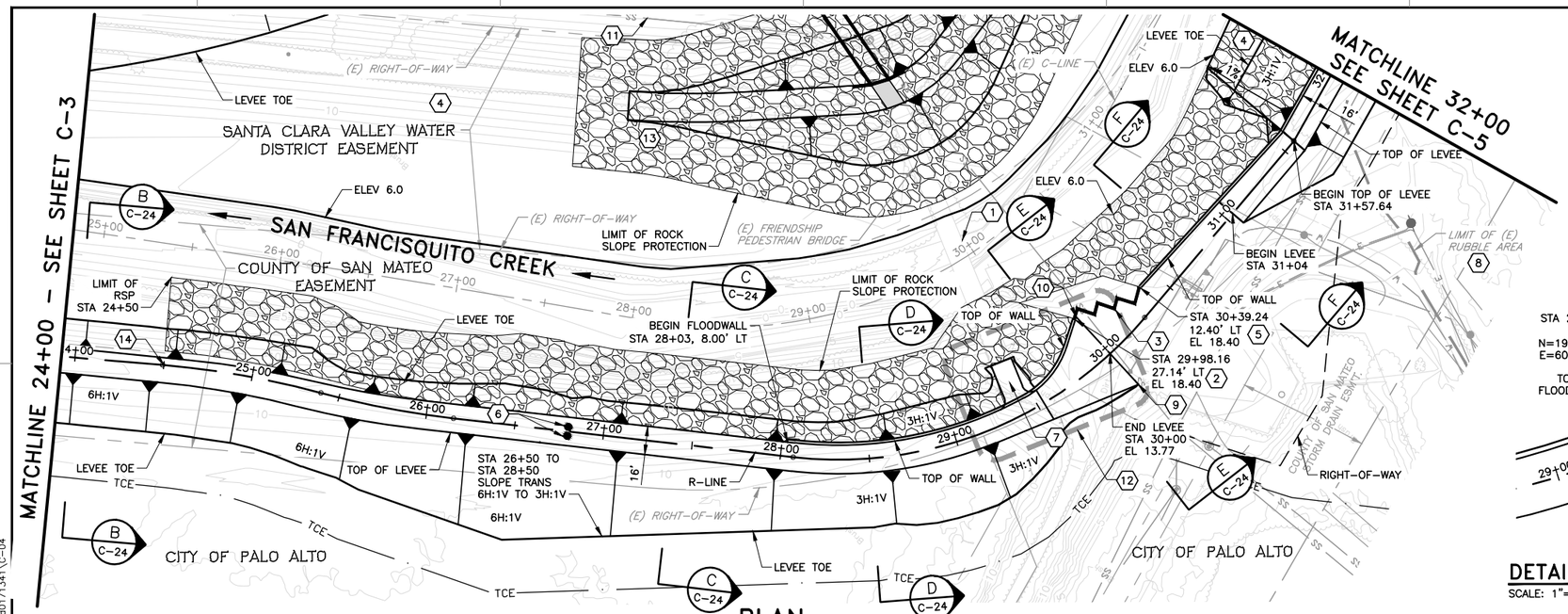

PLAN
SCALE: 1"=40'

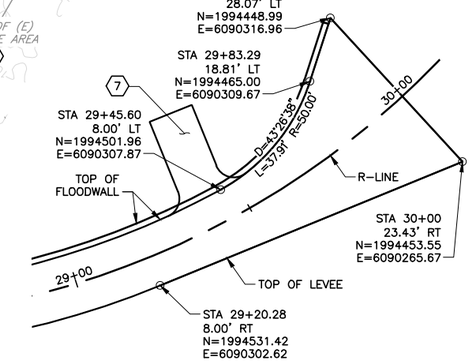

DETAIL B – LEVEE LAYOUT (R-LINE)
SCALE: 1"=20'

STA 29+20 TO 30+00

KEY NOTE:

1. CONTRACTOR TO PROTECT IN PLACE EXISTING BRIDGE STRUCTURE. CONTACT THE CITY OF PALO ALTO REGARDING THE OPTION OF REMOVING OR RELOCATING.
2. CONNECT NEW FLOODWALL TO EXISTING HEADWALL PER 3/S-3
3. CONSTRUCT HEADWALL EXTENSION PER A/S-5
4. CONSTRUCT BENCH WITHIN CREEK. SEE SHEETS X-6 TO X-8.
5. CONNECT NEW FLOODWALL TO EXISTING HEADWALL PER 4/S-3
6. INSTALL FOLDABLE BOLLARDS AT STA 26+80 PER DETAIL '2' AS SHOWN ON SHEET C-34.
7. SEE DETAIL 'A' THIS SHEET.
8. EXISTING RUBBLE SHALL BE REMOVED OFF-SITE TO AN APPROPRIATE LANDFILL PER CONTRACT SPECIFICATIONS. CONTRACTOR SHALL VERIFY EXTENTS OF RUBBLE IN THE FIELD.
9. END LEVEE STA 30+00, 23.43' RT, EL 13.3 – MATCH (E) GRADE
10. END LEVEE STA 30+00, 28.07' LT, EL 13.6 – MATCH (E) GRADE
11. REMOVE (E) SS LINE. SEE SHEET C-42.
12. SEE DETAIL 'B' THIS SHEEET.
13. SEE SHEET C-20 FOR DESIGN OF ISLAND.
14. STA 24+50 END LEVEE REINFORCEMENT OF (E) TOP OF LEVEE BEGIN NEW TOP OF LEVEE

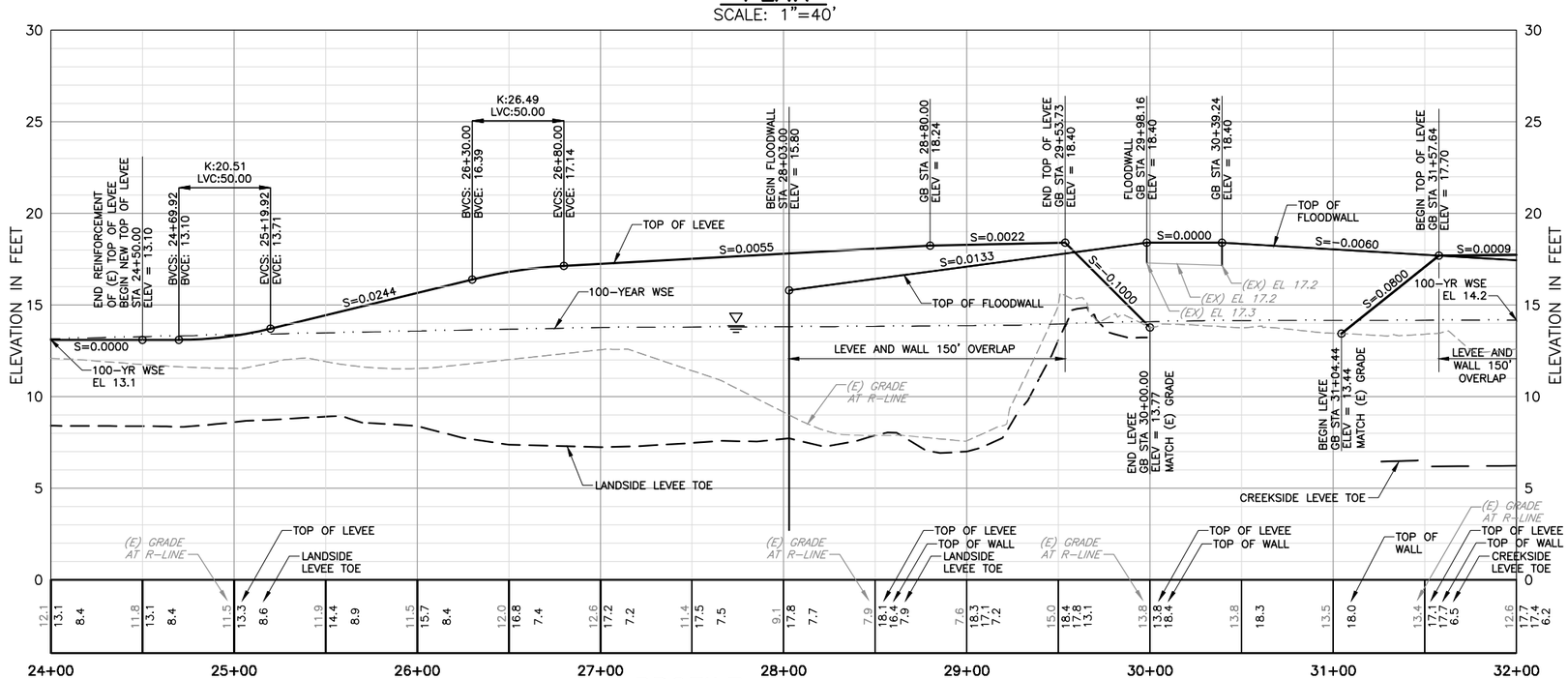

PROFILE
HORIZ: 1"=40'
VERT: 1"=4'

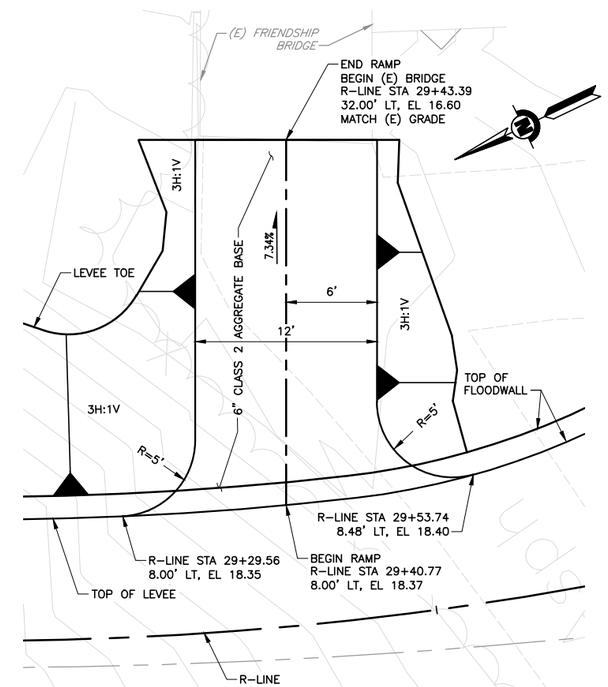

DETAIL A – RAMP TO FRIENDSHIP BRIDGE
SCALE: 1"=5'

REV	DESCRIPTION	DATE	APPR.
	DRAFT 100% AUGUST 2014		

HDR Engineering, Inc.

DATE: JULY 2014
DESIGN: L. JONES
DRAWN: H. SUAREZ
CHECKED: P. HRADILEK

ENGINEERING CERTIFICATION: REGISTERED PROFESSIONAL ENGINEER LANCE M. JONES 68342 Exp. 06-30-15 CIVIL STATE OF CALIFORNIA — PRELIMINARY
PROJECT ENGINEER DATE

SAN FRANCISQUITO CREEK JOINT POWERS AUTHORITY
ACCEPTED BY DISTRICT
PROJECT ENGINEER DATE

PROJECT NAME AND SHEET DESCRIPTION:
SAN FRANCISQUITO CREEK FLOOD REDUCTION, ECOSYSTEM RESTORATION, & RECREATION PROJECT
PLAN AND PROFILE – (R-LINE)
STATION 24+00 TO 32+00

SCALE: AS SHOWN
VERIFY SCALES: 0 1" BAR IS ONE INCH ON ORIGINAL DRAWING IF NOT ONE INCH ON THIS SHEET, ADJUST SCALES ACCORDINGLY
PROJECT NUMBER: 26284002
SHEET CODE: C-4
SHEET NUMBER: 18 OF 119

DOCUMENT NUMBER: SFC_LP-C-1028-XXXXXXX
USERNAME: BillShad Tue 08 Jul 2008 09:32am
FILENAME: C:\pwworking\sac\d0171341\C-04

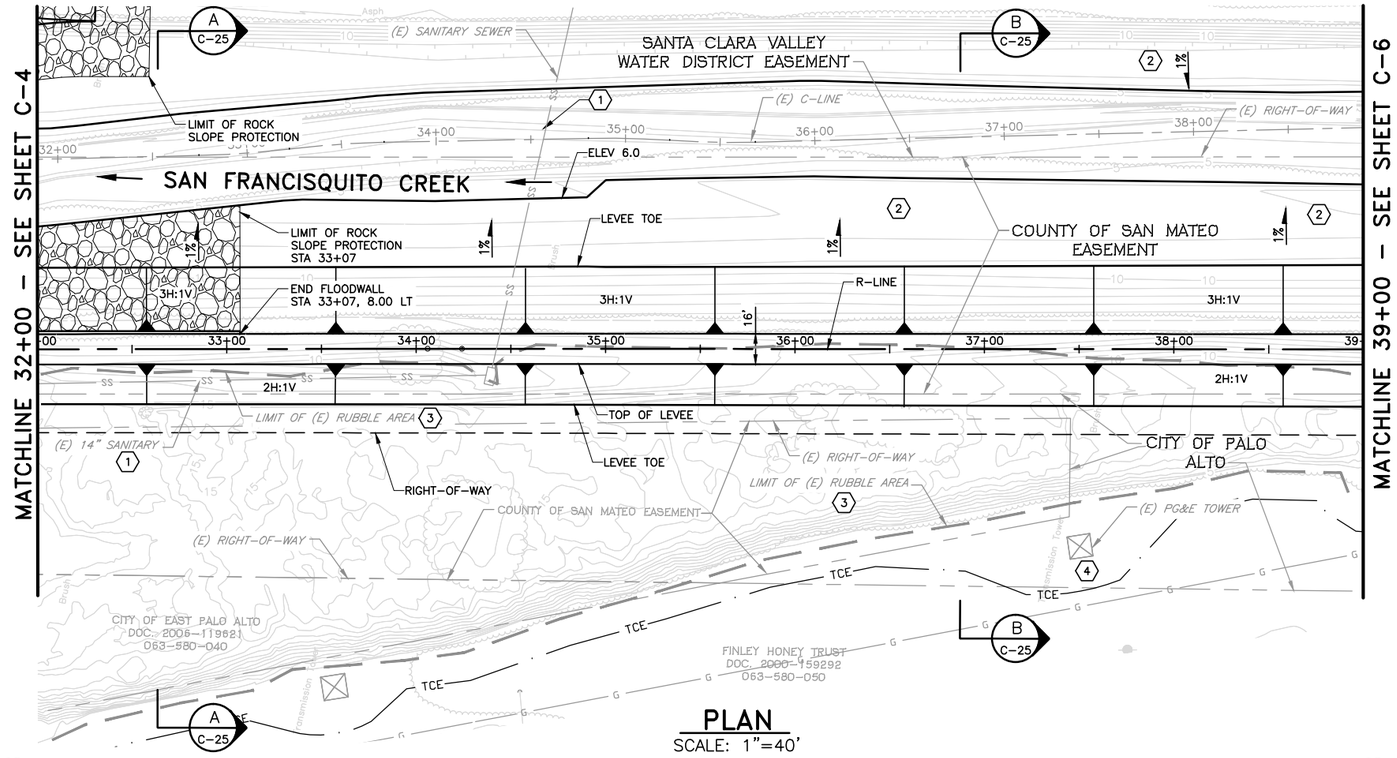

PLAN
SCALE: 1"=40'

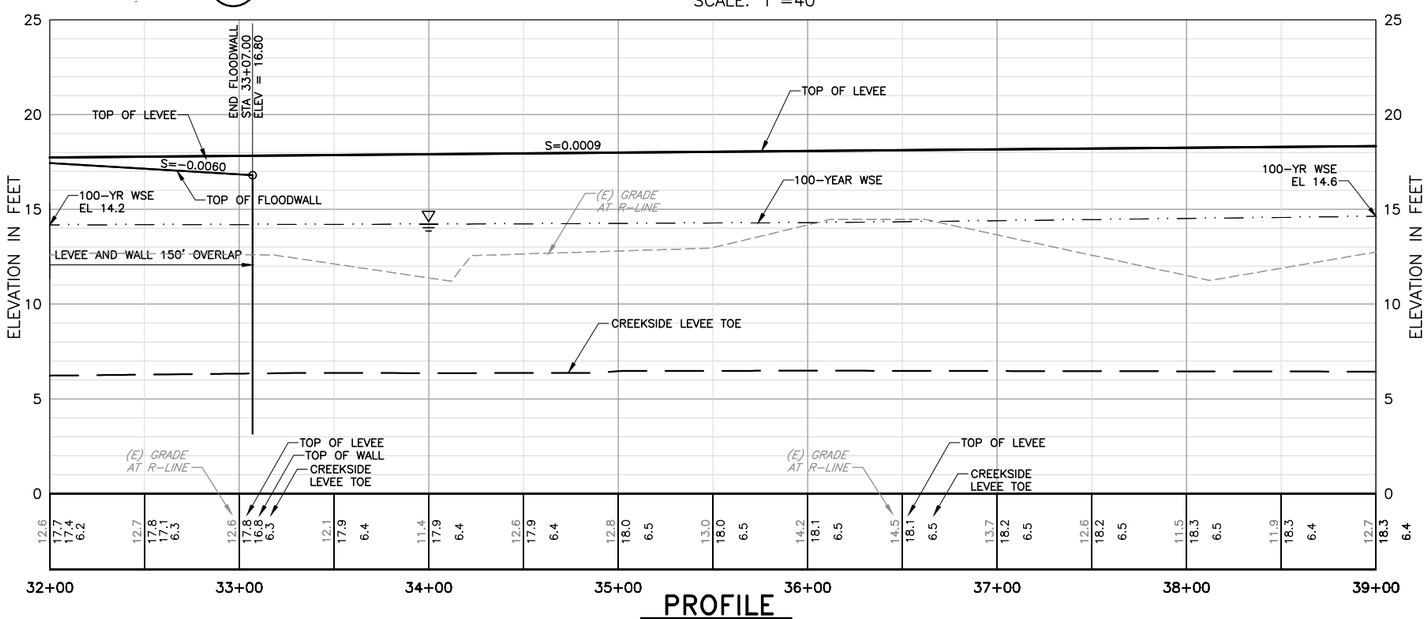

PROFILE
HORIZ: 1"=40'
VERT: 1"=4'

KEY NOTE:

1. REMOVE AND DISPOSE OF EXISTING ABANDONED 14" SS LINE. SEE SHEET C-43.
2. CONSTRUCT BENCH WITHIN CREEK. SEE SHEETS X-8 TO X-9.
3. EXISTING RUBBLE SHALL BE REMOVED OFF-SITE TO AN APPROPRIATE LANDFILL PER CONTRACT SPECIFICATIONS. CONTRACTOR SHALL VERIFY EXTENTS OF RUBBLE IN THE FIELD.
4. PROTECT EXISTING TOWER.

USERNAME: BillShad Tue 08 Jul 2008 09:32am
FILENAME: C:\pwworking\sac\d0171341\C-05

DOCUMENT NUMBER: SFC_LP-C-1028-XXXXXX

REV	DESCRIPTION	DATE	APPR.
	DRAFT 100% AUGUST 2014		

HDR Engineering, Inc.

DATE: JULY 2014
DESIGN: L. JONES
DRAWN: H. SUAREZ
CHECKED: P. HRADILEK

ENGINEERING CERTIFICATION
REGISTERED PROFESSIONAL ENGINEER LANCE M. JONES 6934 Exp. 06-30-15 CIVIL STATE OF CALIFORNIA
PRELIMINARY
PROJECT ENGINEER DATE

SAN FRANCISQUITO CREEK JOINT POWERS AUTHORITY
ACCEPTED BY DISTRICT
PROJECT ENGINEER DATE

PROJECT NAME AND SHEET DESCRIPTION:
SAN FRANCISQUITO CREEK FLOOD REDUCTION, ECOSYSTEM RESTORATION, & RECREATION PROJECT
PLAN AND PROFILE – (R-LINE)
STATION 32+00 TO 39+00

SCALE: AS SHOWN
VERIFY SCALES: 0 1"
BAR IS ONE INCH ON ORIGINAL DRAWING IF NOT ONE INCH ON THIS SHEET, ADJUST SCALES ACCORDINGLY

PROJECT NUMBER: 26284002
SHEET CODE: C-5
SHEET NUMBER: 19 OF 119

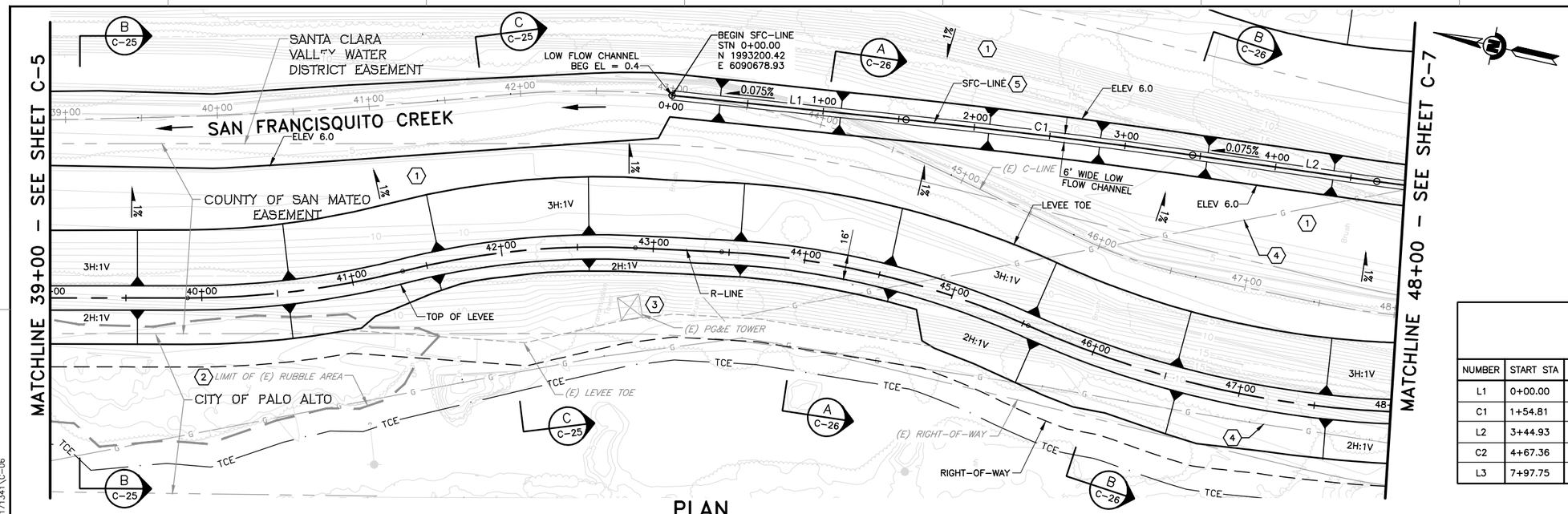

PLAN

SCALE: 1"=40'

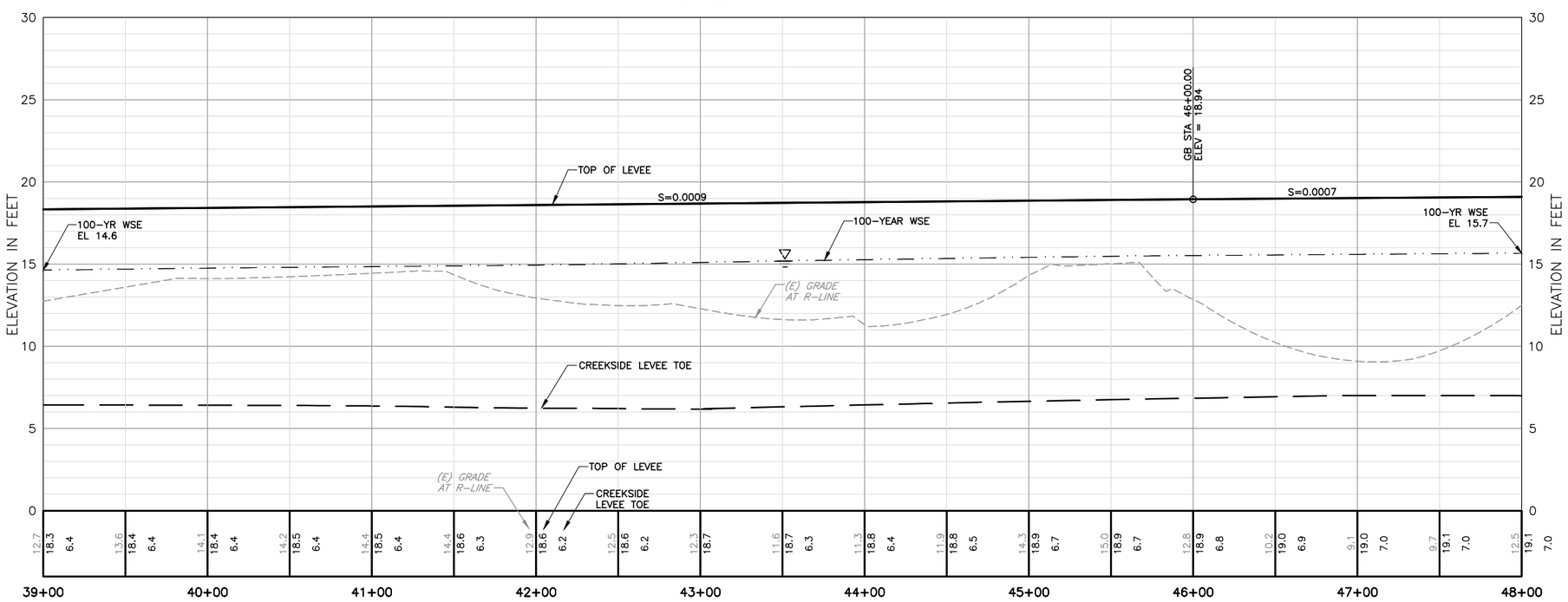

PROFILE

HORIZ: 1"=40'
VERT: 1"=4'

KEY NOTE:

1. CONSTRUCT BENCH WITHIN CREEK. SEE SHEETS X-10 TO X-12.
2. EXISTING RUBBLE SHALL BE HAULED OFF-SITE FOR APPROPRIATE DISPOSAL PER CONTRACT SPECIFICATIONS. CONTRACTOR SHALL VERIFY EXTENTS OF RUBBLE IN THE FIELD.
3. PROTECT EXISTING TOWER.
4. (E) GAS LINE SHOWN WAS RELOCATED BY PG&E. CONTRACTOR TO COORDINATE WITH PG&E FOR LOCATION OF NEW GAS MAIN.
5. SEE SHEETS X-11 THRU X-13 FOR RE-ALIGNMENT OF LOW FLOW CHANNEL.

SFC-LINE ALIGNMENT LINE AND CURVE TABLE

NUMBER	START STA	END STA	CURVE PI	LENGTH	DELTA	RADIUS	LINE/CHORD BRNG
L1	0+00.00	1+54.81	N/A	154.81'	N/A	N/A	S6°53'28"E
C1	1+54.81	3+44.93	2+49.88	190.12'	2°10'43"	5000.00'	S5°48'07"E
L2	3+44.93	4+67.36	N/A	122.43'	N/A	N/A	S4°42'45"E
C2	4+67.36	7+97.75	6+34.07	330.39'	18°55'49"	1000.00'	S14°10'40"E
L3	7+97.75	10+61.56	N/A	263.81'	N/A	N/A	S23°38'34"E

REV	DESCRIPTION	DATE	APPR.
	DRAFT 100% AUGUST 2014		

HDR Engineering, Inc.

DATE: JULY 2014
DESIGN: L. JONES
DRAWN: H. SUAREZ
CHECKED: P. HRADILEK

ENGINEERING CERTIFICATION: REGISTERED PROFESSIONAL ENGINEER LANCE M. JONES 68374 Exp. 09-30-15 CIVIL STATE OF CALIFORNIA — PRELIMINARY
PROJECT ENGINEER DATE

SAN FRANCISQUITO CREEK JOINT POWERS AUTHORITY
ACCEPTED BY DISTRICT
PROJECT ENGINEER DATE

PROJECT NAME AND SHEET DESCRIPTION:
SAN FRANCISQUITO CREEK FLOOD REDUCTION, ECOSYSTEM RESTORATION, & RECREATION PROJECT
PLAN AND PROFILE – (R-LINE) STATION 39+00 TO 48+00

SCALE: AS SHOWN
VERIFY SCALES: 0 1" BAR IS ONE INCH ON ORIGINAL DRAWING IF NOT ONE INCH ON THIS SHEET, ADJUST SCALES ACCORDINGLY

PROJECT NUMBER: 26284002
SHEET CODE: C-6
SHEET NUMBER: 20 OF 119

DOCUMENT NUMBER: SFC_LP-C-1028-XXXXXX

USERNAME: BillShad Tue 08 Jul 2008 09:32am
FILENAME: C:\pwworking\sac\d0171341\C-06

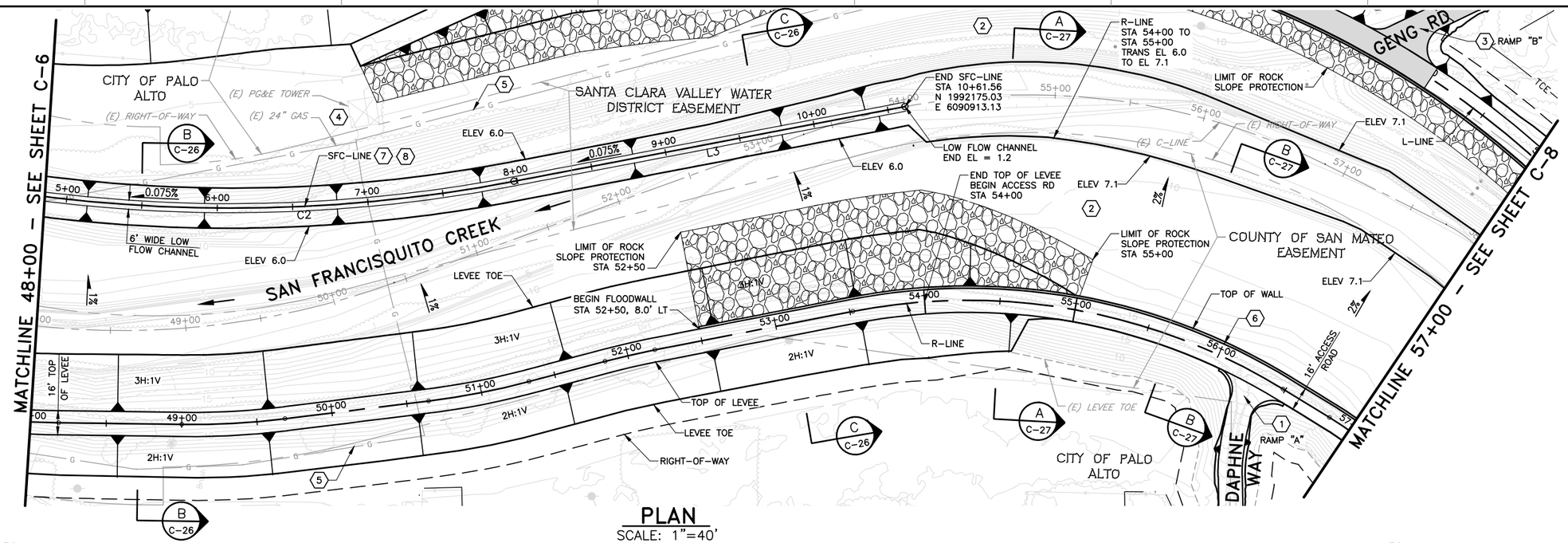

PLAN

SCALE: 1"=40'

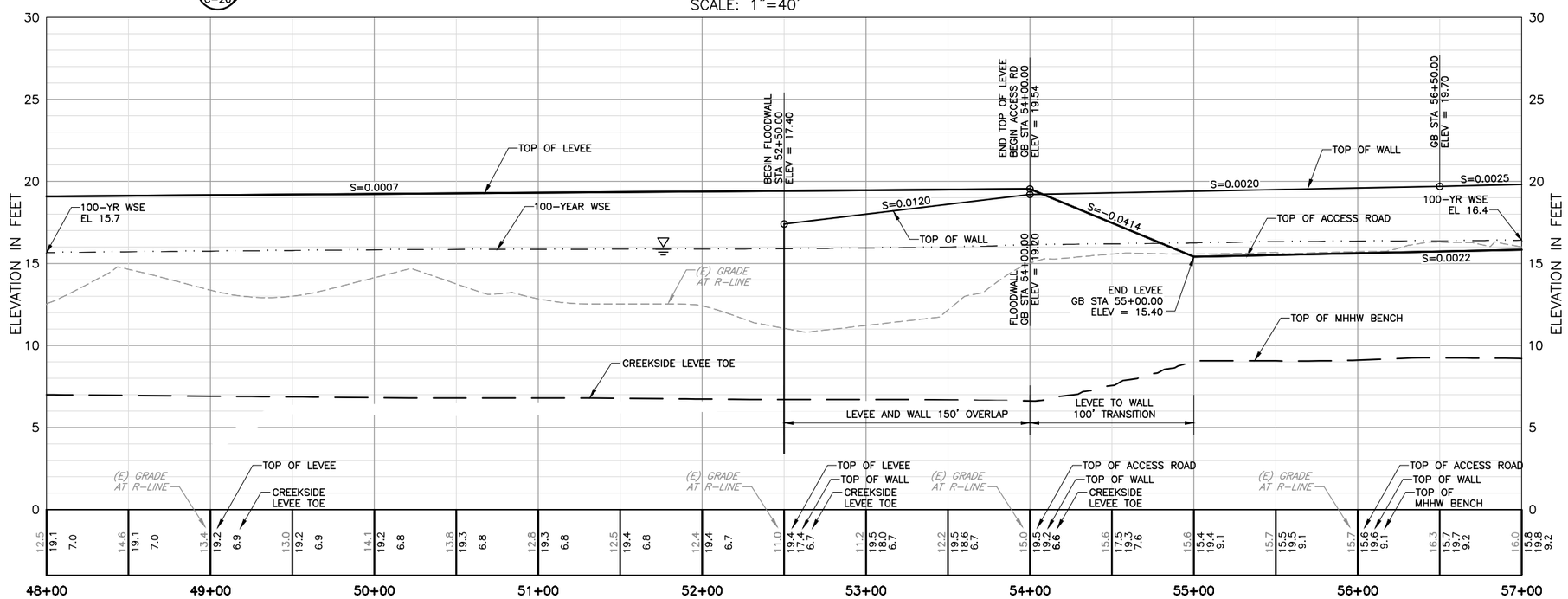

PROFILE

HORIZ: 1"=40'
VERT: 1"=4'

KEY NOTE:

1. SEE SHEET C–18 FOR DAPHNE WAY ACCESS RAMP DETAILS.
2. CONSTRUCT BENCH WITHIN CREEK. SEE SHEETS X–12 TO X–14.
3. SEE SHEET C–18 FOR GENG ROAD ACCESS RAMP DETAILS.
4. EXISTING PG&E TOWER IS TO BE RELOCATED BY PG&E. CONTRACTOR SHALL LOCATE AND PROTECT THE NEW TOWER.
5. (E) GAS LINE SHOWN WAS RELOCATED BY PG&E. CONTRACTOR TO COORDINATE WITH PG&E FOR LOCATION OF NEW GAS MAIN.
6. DUE TO LOW OHE AT THIS LOCATION, CONTRACTOR MAY CHOOSE TO CUT SHEET PILES DURING CONSTRUCTION. SHEET PILE WELDING SPLICE DETAIL IS SHOWN ON SHEET S–1.
7. SEE SHEETS X–12 TO X–14 FOR RE–ALIGNMENT OF LOW FLOW CHANNEL.
8. SEE SHEET C–6 FOR SFC–LINE ALIGNMENT LINE AND CURVE TABLE.

REV	DESCRIPTION	DATE	APPR.
	DRAFT 100% AUGUST 2014		

HDR Engineering, Inc.

DATE: JULY 2014
DESIGN: L. JONES
DRAWN: H. SUAREZ
CHECKED: P. HRADILEK

ENGINEERING CERTIFICATION
REGISTERED PROFESSIONAL ENGINEER LANCE M. JONES 68374 Exp. 09-30-15 CIVIL STATE OF CALIFORNIA
PRELIMINARY
PROJECT ENGINEER DATE

SAN FRANCISQUITO CREEK JOINT POWERS AUTHORITY
ACCEPTED BY DISTRICT
PROJECT ENGINEER DATE

PROJECT NAME AND SHEET DESCRIPTION:
SAN FRANCISQUITO CREEK FLOOD REDUCTION, ECOSYSTEM RESTORATION, & RECREATION PROJECT
PLAN AND PROFILE – (R-LINE)
STATION 48+00 TO 57+00

SCALE: AS SHOWN
VERIFY SCALES: 0 1"
BAR IS ONE INCH ON ORIGINAL DRAWING IF NOT ONE INCH ON THIS SHEET, ADJUST SCALES ACCORDINGLY

PROJECT NUMBER: 26284002
SHEET CODE: C-7
SHEET NUMBER: 21 OF 119

DOCUMENT NUMBER: SFC_LP-C-1028-XXXXXXX

USERNAME: BillShad Tue 08 Jul 2008 09:32am
FILENAME: C:\pwworking\sac\d0171341\C-07

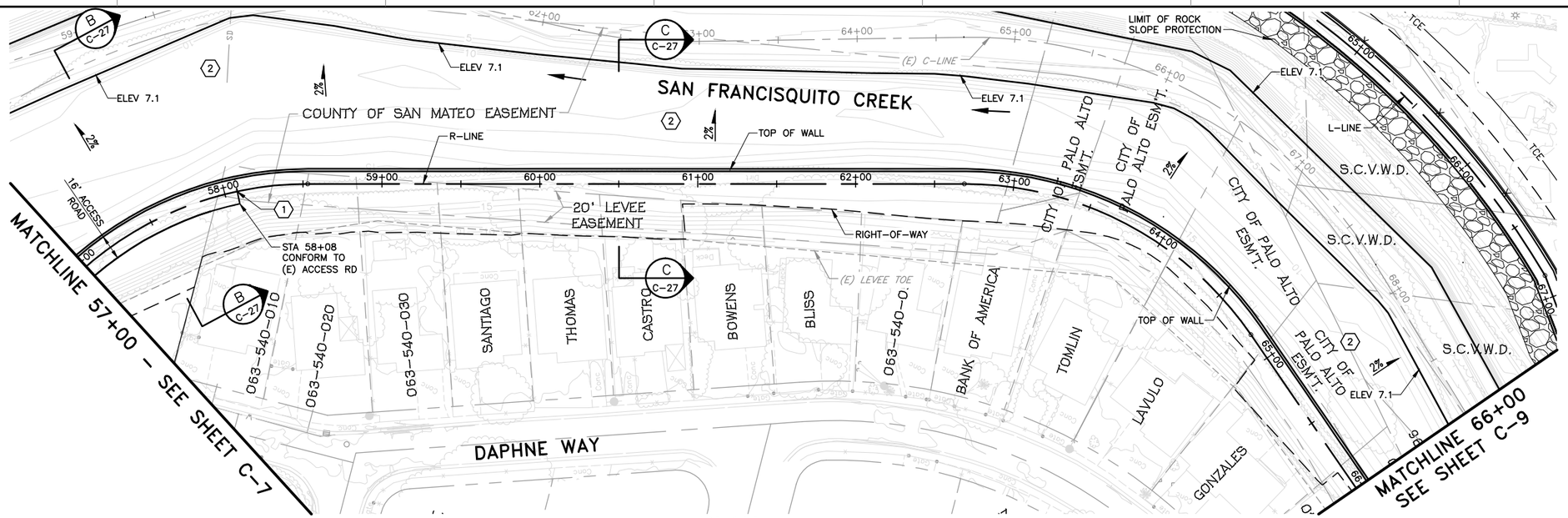

PLAN

SCALE: 1"=40'

KEY NOTE:

1. TIE NEW ACCESS ROAD INTO EXISTING 12' ACCESS ROAD AT LANDSIDE CROWN HINGE POINT.
2. CONSTRUCT BENCH WITHIN CREEK. SEE SHEETS X-15 TO X-17.

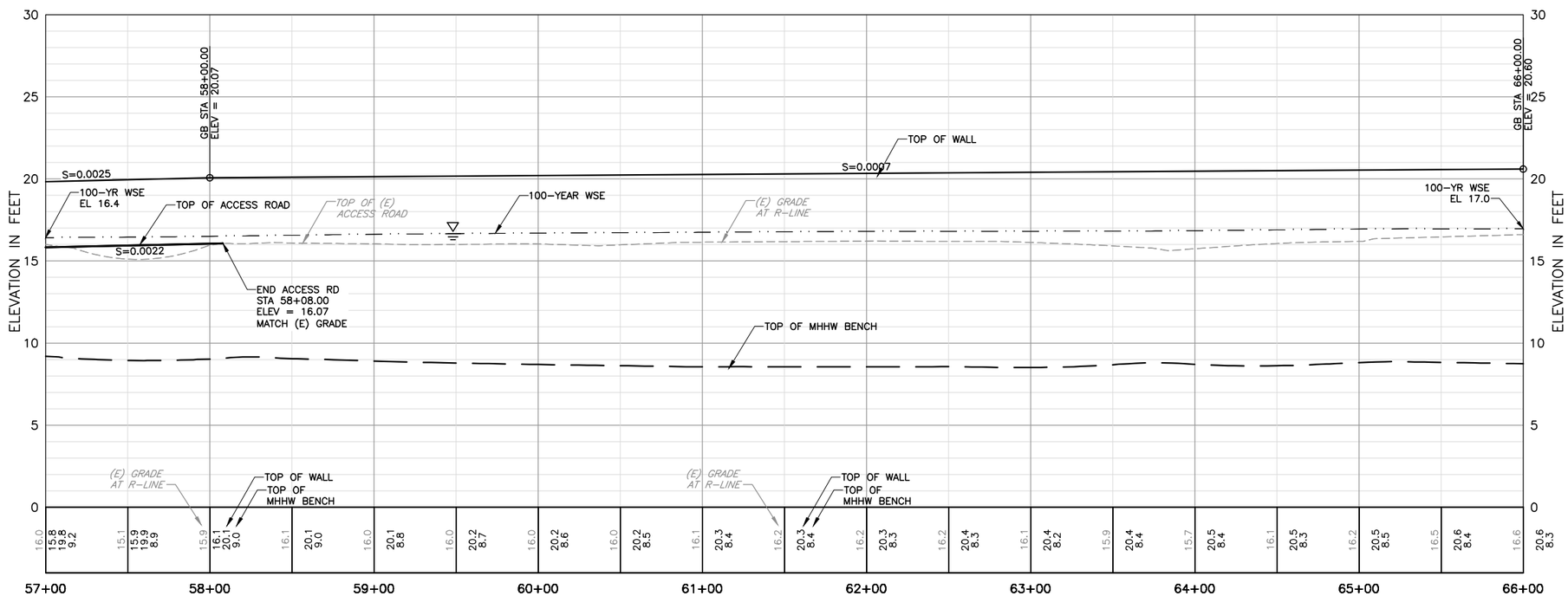

PROFILE

HORIZ: 1"=40'
VERT: 1"=4'

REV	DESCRIPTION	DATE	APPR.
	DRAFT 100% AUGUST 2014		

HDR Engineering, Inc.

DATE: JULY 2014
DESIGN: L. JONES
DRAWN: H. SUAREZ
CHECKED: P. HRADILEK

ENGINEERING CERTIFICATION: REGISTERED PROFESSIONAL ENGINEER LANCE M. JONES 68342 Exp. 06-30-15 CIVIL STATE OF CALIFORNIA — PRELIMINARY

PROJECT ENGINEER DATE

SAN FRANCISQUITO CREEK JOINT POWERS AUTHORITY

ACCEPTED BY DISTRICT

PROJECT ENGINEER DATE

PROJECT NAME AND SHEET DESCRIPTION:

SAN FRANCISQUITO CREEK FLOOD REDUCTION, ECOSYSTEM RESTORATION, & RECREATION PROJECT

PLAN AND PROFILE – (R-LINE)
STATION 57+00 TO 66+00

SCALE: AS SHOWN

VERIFY SCALES: 0 — 1"
BAR IS ONE INCH ON ORIGINAL DRAWING IF NOT ONE INCH ON THIS SHEET, ADJUST SCALES ACCORDINGLY

PROJECT NUMBER: 26284002

SHEET CODE: C-8

SHEET NUMBER: 22 OF 119

DOCUMENT NUMBER: SFC_LP-C-1028-XXXXXXX

USERNAME: BillShad Tue 08 Jul 2008 09:32am
FILENAME: C:\pwworking\sac\d0171341\C-08

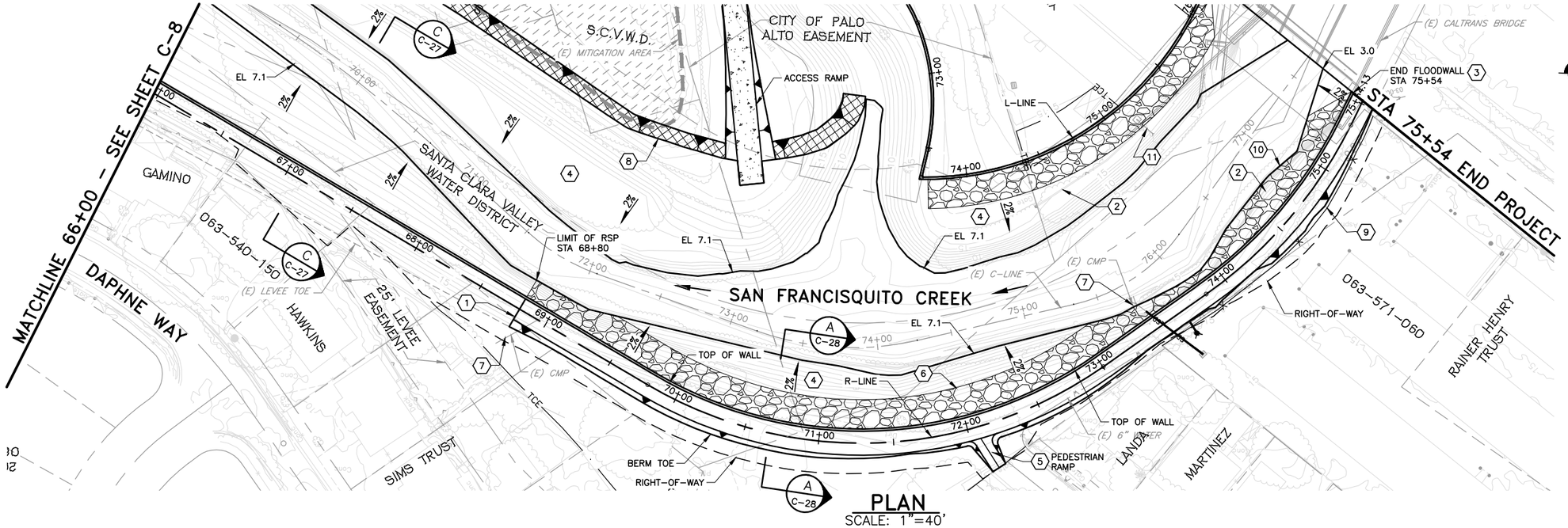

PLAN
SCALE: 1"=40'

KEY NOTE:

1. TIE NEW ACCESS ROAD INTO EXISTING 12' ACCESS ROAD AT LANDSIDE CROWN HINGE POINT, STA 68+80.
2. REMOVE AND DISPOSE OF EXISTING RETAINING WALL STRUCTURE.
3. END FLOODWALL AT EXISTING BRIDGE STRUCTURE PER DETAIL 2 ON SHEET S-1.
4. CONSTRUCT BENCH WITHIN CREEK. SEE SHEETS X-17 TO X-19.
5. CONSTRUCT PEDESTRIAN RAMP FOR VERBENA DRIVE PER DETAIL ON SHEET C-20.
6. LIMIT OF ROCK SLOPE PROTECTION.
7. CONSTRUCT STORM DRAIN CROSSING PER DETAIL 'C' SHOWN ON SHEET C-48.
8. LIMIT OF TRM PROTECTION.
9. CONSTRUCT 6' CHAIN LINK FENCE PER 1/C-35 FROM R-LINE STA 73+40 TO R-LINE STA 75+46 CONTRACTOR TO COORDINATE WITH DISTRICT REGARDING LOCATION OF FENCE.
10. TRANSITION DAYLIGHT FROM EL 7.1 TO EL 3.0 FROM R-LINE STA 74+00 TO STA 75+54.
11. REMOVE AND DISPOSE OF (E) SD AND INLET.

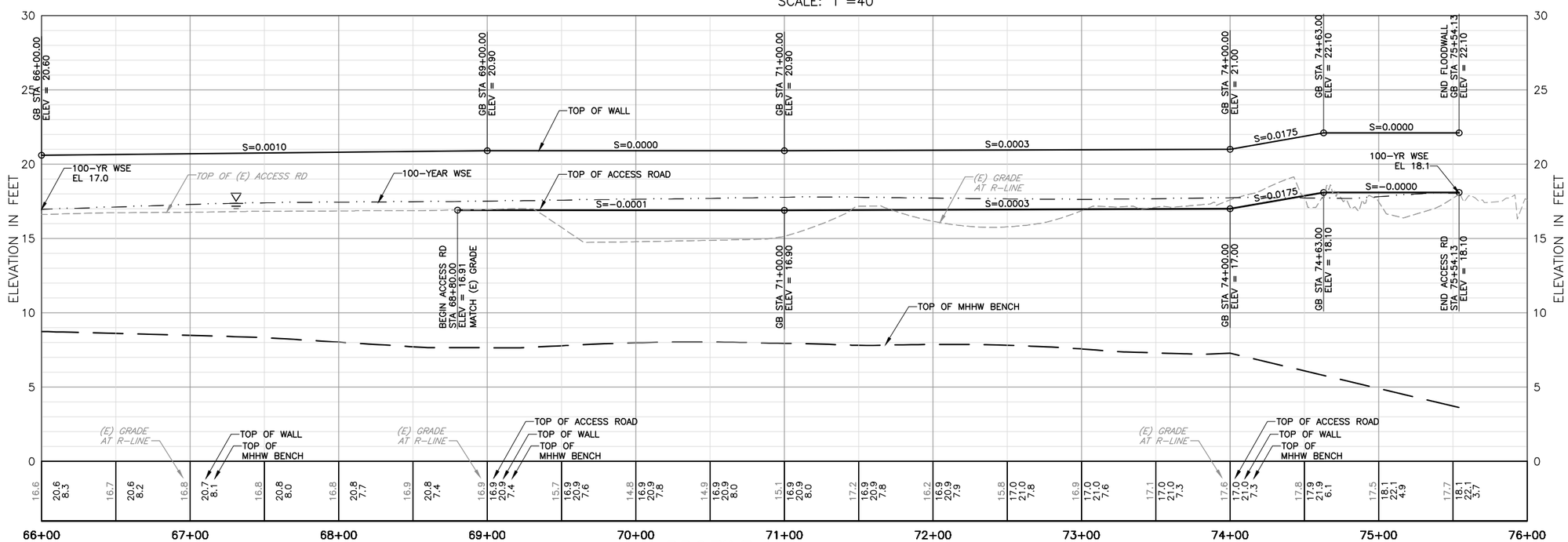

PROFILE
HORIZ: 1"=40'
VERT: 1"=4'

REV	DESCRIPTION	DATE	APPR.
	DRAFT 100% AUGUST 2014		

HDR Engineering, Inc.

DATE: JULY 2014
DESIGN: L. JONES
DRAWN: H. SUAREZ
CHECKED: P. HRADILEK

ENGINEERING CERTIFICATION
REGISTERED PROFESSIONAL ENGINEER LANCE M. JONES 66374 Exp. 9-30-15 CIVIL STATE OF CALIFORNIA
PRELIMINARY
PROJECT ENGINEER DATE

SAN FRANCISQUITO CREEK JOINT POWERS AUTHORITY
ACCEPTED BY DISTRICT
PROJECT ENGINEER DATE

PROJECT NAME AND SHEET DESCRIPTION:
SAN FRANCISQUITO CREEK FLOOD REDUCTION, ECOSYSTEM RESTORATION, & RECREATION PROJECT
PLAN AND PROFILE – (R-LINE)
STATION 66+00 TO 75+54

SCALE: AS SHOWN
VERIFY SCALES: 0 1"
BAR IS ONE INCH ON ORIGINAL DRAWING IF NOT ONE INCH ON THIS SHEET, ADJUST SCALES ACCORDINGLY

PROJECT NUMBER: 26284002
SHEET CODE: C-9
SHEET NUMBER: 23 OF 119

DOCUMENT NUMBER: SFC_LP-C-1028-XXXXXXX

USERNAME: BillShad Tue 08 Jul 2008 09:32am
FILENAME: C:\pwworking\sac\d0171341\C-09

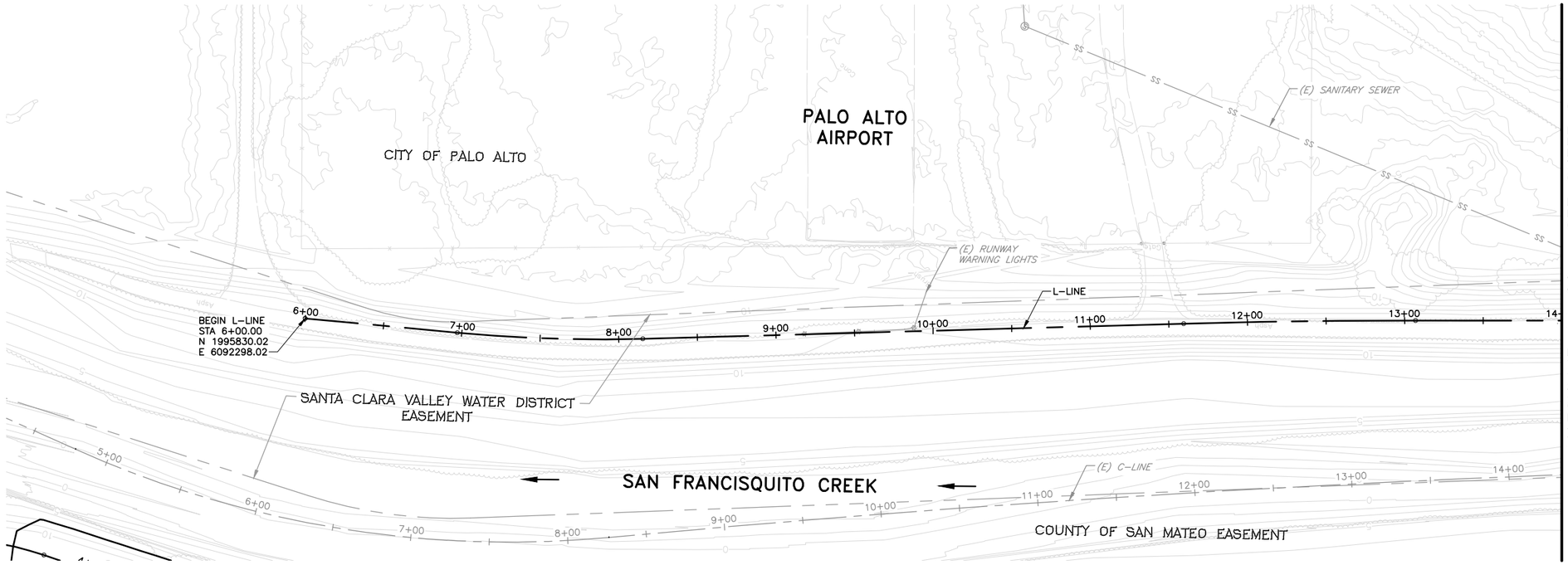

PLAN

SCALE: 1"=40'

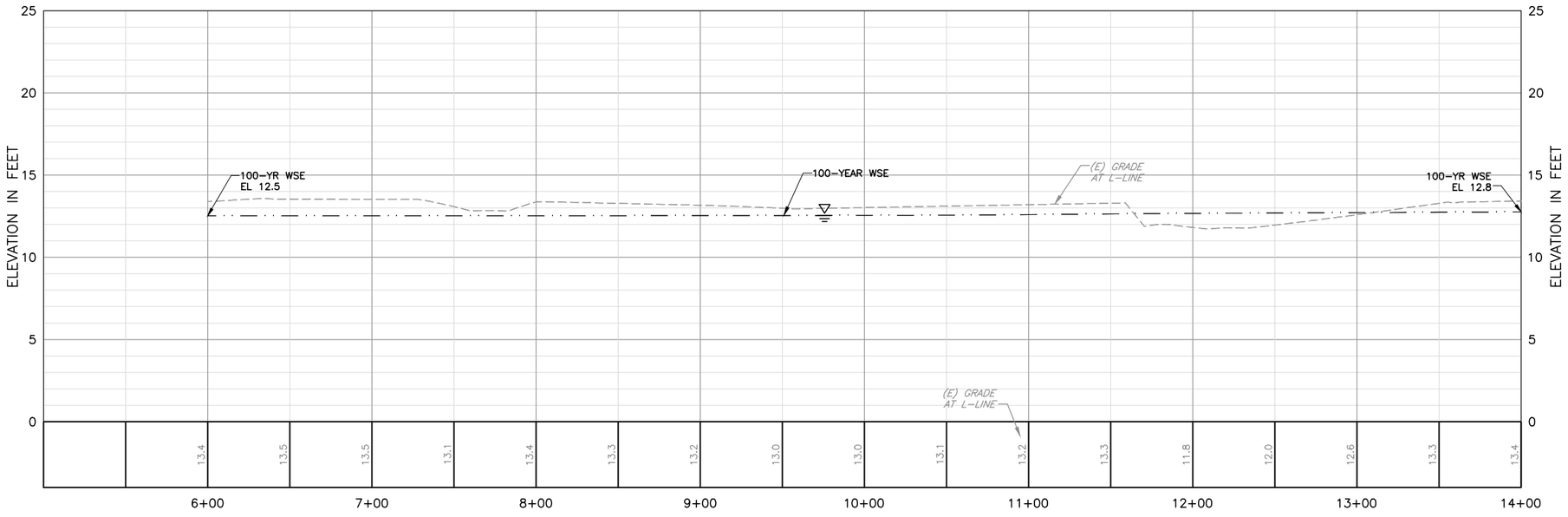

PROFILE

HORIZ: 1"=40'
VERT: 1"=4'

REV	DESCRIPTION	DATE	APPR.
	DRAFT 100% AUGUST 2014		

HDR Engineering, Inc.

DATE	JULY 2014
DESIGN	L. JONES
DRAWN	H. SUAREZ
CHECKED	P. HRADILEK

ENGINEERING CERTIFICATION

REGISTERED PROFESSIONAL ENGINEER LANCE M. JONES 98374 Exp. 9-30-15 CIVIL STATE OF CALIFORNIA

PRELIMINARY

PROJECT ENGINEER DATE

SAN FRANCISQUITO CREEK JOINT POWERS AUTHORITY

ACCEPTED BY DISTRICT

PROJECT ENGINEER DATE

PROJECT NAME AND SHEET DESCRIPTION:

SAN FRANCISQUITO CREEK FLOOD REDUCTION, ECOSYSTEM RESTORATION, & RECREATION PROJECT

PLAN AND PROFILE – (L-LINE)
STATION 6+00 TO 14+00

SCALE: AS SHOWN

VERIFY SCALES: 0 — 1"
BAR IS ONE INCH ON ORIGINAL DRAWING IF NOT ONE INCH ON THIS SHEET, ADJUST SCALES ACCORDINGLY

PROJECT NUMBER: 26284002

SHEET CODE: C-10

SHEET NUMBER: 24 OF 119

DOCUMENT NUMBER: SFC_LP-C-1028-XXXXXXX

USERNAME: BillShad Tue 08 Jul 2008 09:32am
FILENAME: C:\pwworking\sac\d0171341\C-10

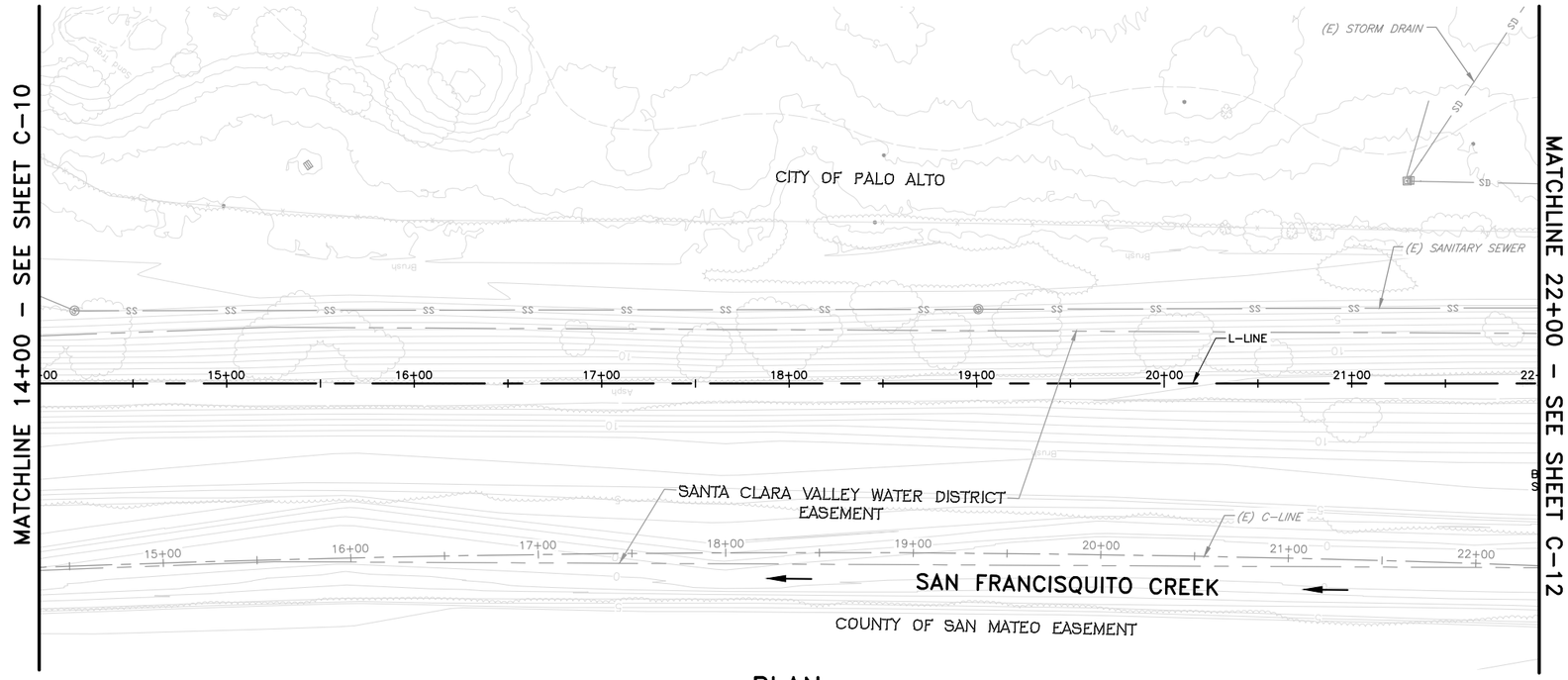

PLAN

SCALE: 1"=40'

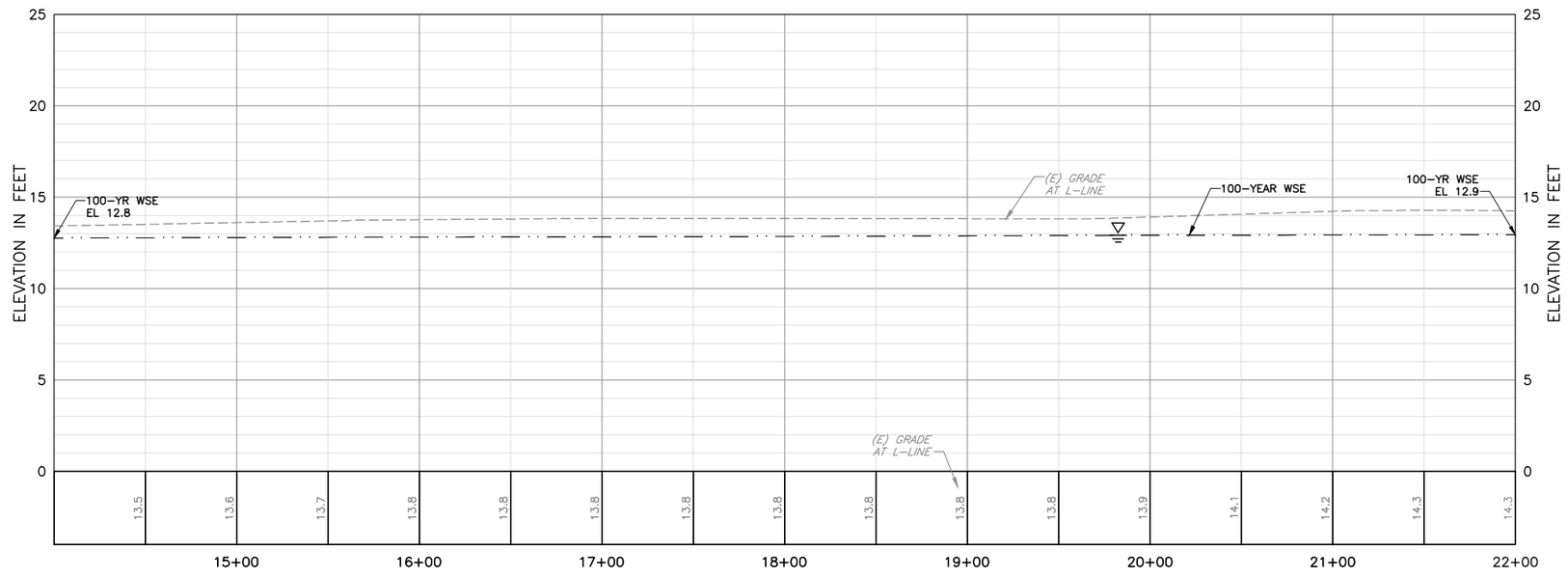

PROFILE

HORIZ: 1"=40'
VERT: 1"=4'

REV	DESCRIPTION	DATE	APPR.
	DRAFT 100% AUGUST 2014		

HDR Engineering, Inc.

DATE	JULY 2014
DESIGN	L. JONES
DRAWN	H. SUAREZ
CHECKED	P. HRADILEK

ENGINEERING CERTIFICATION

REGISTERED PROFESSIONAL ENGINEER LANCE M. JONES 68374 Exp. 6-30-15 CIVIL STATE OF CALIFORNIA

PRELIMINARY

PROJECT ENGINEER DATE

SAN FRANCISQUITO CREEK JOINT POWERS AUTHORITY

ACCEPTED BY DISTRICT

PROJECT ENGINEER DATE

PROJECT NAME AND SHEET DESCRIPTION:

SAN FRANCISQUITO CREEK FLOOD REDUCTION, ECOSYSTEM RESTORATION, & RECREATION PROJECT

PLAN AND PROFILE – (L–LINE)
STATION 14+00 TO 22+00

SCALE: AS SHOWN

VERIFY SCALES: 0 1"
BAR IS ONE INCH ON ORIGINAL DRAWING IF NOT ONE INCH ON THIS SHEET, ADJUST SCALES ACCORDINGLY

PROJECT NUMBER: 26284002

SHEET CODE: C–11

SHEET NUMBER: 25 OF 119

DOCUMENT NUMBER: SFC_LP–C–1028–XXXXXXX

USERNAME: BillShad Tue 08 Jul 2008 09:32am
FILENAME: C:\pwworking\sac\d0171341\C–11

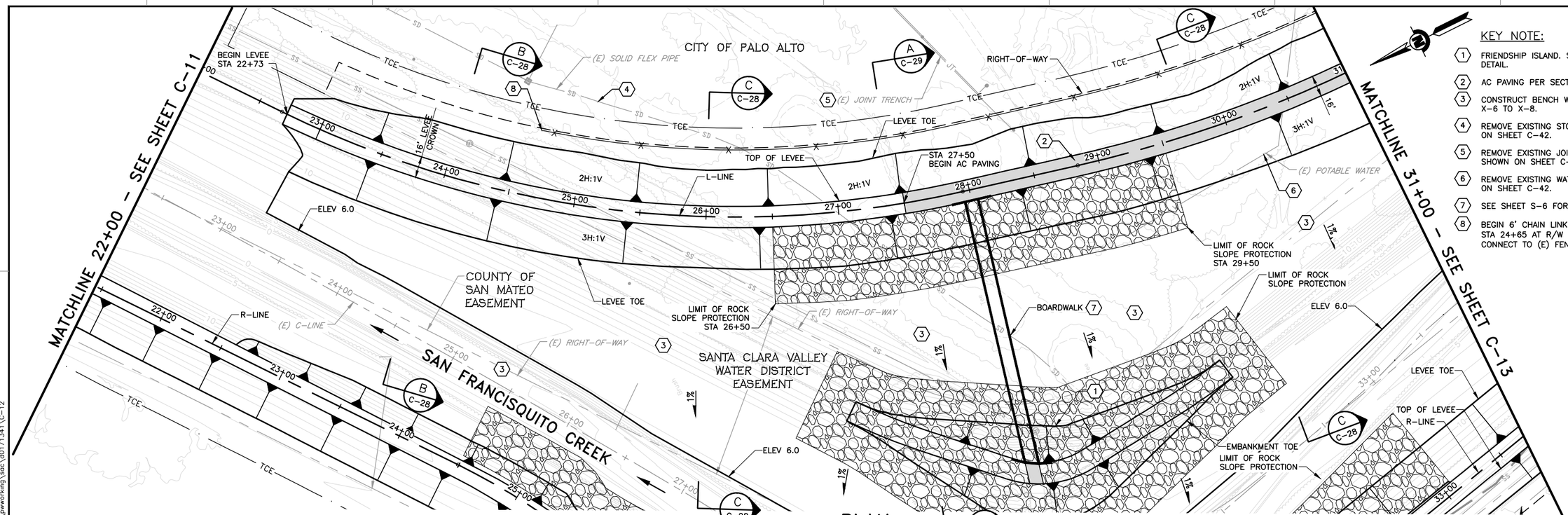

PLAN

SCALE: 1"=40'

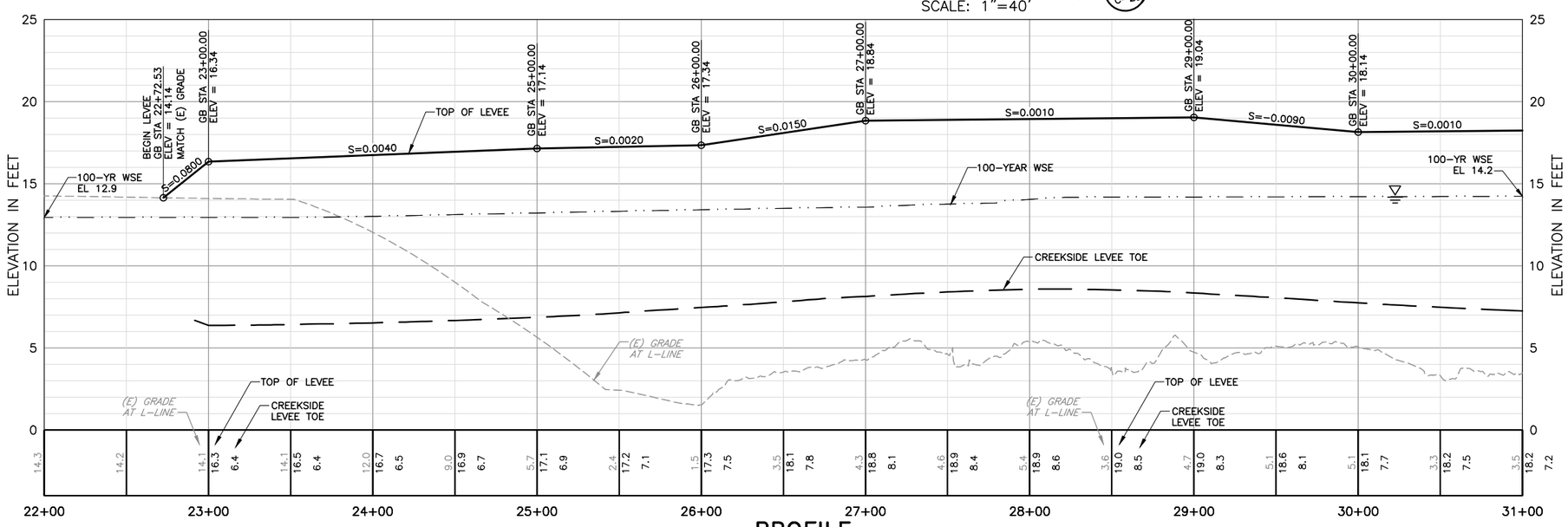

PROFILE

HORIZ: 1"=40'
VERT: 1"=4'

KEY NOTE:

1. FRIENDSHIP ISLAND. SEE SHEET C-20 FOR GRADING DETAIL.
2. AC PAVING PER SECTION F ON SHEET C-33.
3. CONSTRUCT BENCH WITHIN CREEK. SEE SHEETS X-6 TO X-8.
4. REMOVE EXISTING STORM DRAIN PER LIMITS SHOWN ON SHEET C-42.
5. REMOVE EXISTING JOINT TRENCH LINE PER LIMITS SHOWN ON SHEET C-42.
6. REMOVE EXISTING WATER LINE PER LIMITS SHOWN ON SHEET C-42.
7. SEE SHEET S-6 FOR CONSTRUCTION OF BOARDWALK.
8. BEGIN 6' CHAIN LINK FENCE PER 1/C-35 STA 24+65 AT R/W CONNECT TO (E) FENCE.

REV	DESCRIPTION	DATE	APPR.
	DRAFT 100% AUGUST 2014		

HDR Engineering, Inc.

DATE: JULY 2014
DESIGN: L. JONES
DRAWN: H. SUAREZ
CHECKED: P. HRADILEK

ENGINEERING CERTIFICATION
REGISTERED PROFESSIONAL ENGINEER LANCE M. JONES C-60174 Exp. 6-30-15 CIVIL STATE OF CALIFORNIA
PRELIMINARY
PROJECT ENGINEER DATE

SAN FRANCISQUITO CREEK JOINT POWERS AUTHORITY
ACCEPTED BY DISTRICT
PROJECT ENGINEER DATE

PROJECT NAME AND SHEET DESCRIPTION:
SAN FRANCISQUITO CREEK FLOOD REDUCTION, ECOSYSTEM RESTORATION, & RECREATION PROJECT
PLAN AND PROFILE – (L-LINE)
STATION 22+00 TO 31+00

SCALE: AS SHOWN
VERIFY SCALES: 0 1" BAR IS ONE INCH ON ORIGINAL DRAWING IF NOT ONE INCH ON THIS SHEET, ADJUST SCALES ACCORDINGLY
PROJECT NUMBER: 26284002
SHEET CODE: C-12
SHEET NUMBER: 26 OF 119

DOCUMENT NUMBER: SFC_LP-C-1028-XXXXXXX
USERNAME: BillShad Tue 08 Jul 2008 09:32am
FILENAME: C:\pwworking\sac\d0171341\C-12

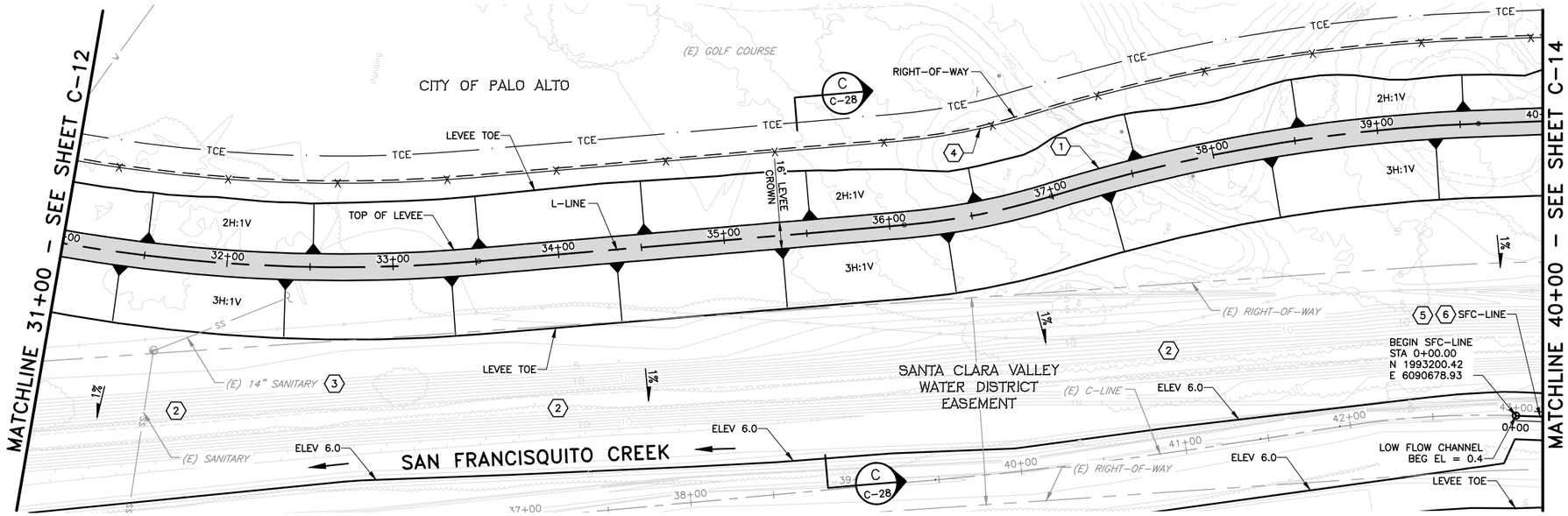

PLAN

SCALE: 1"=40'

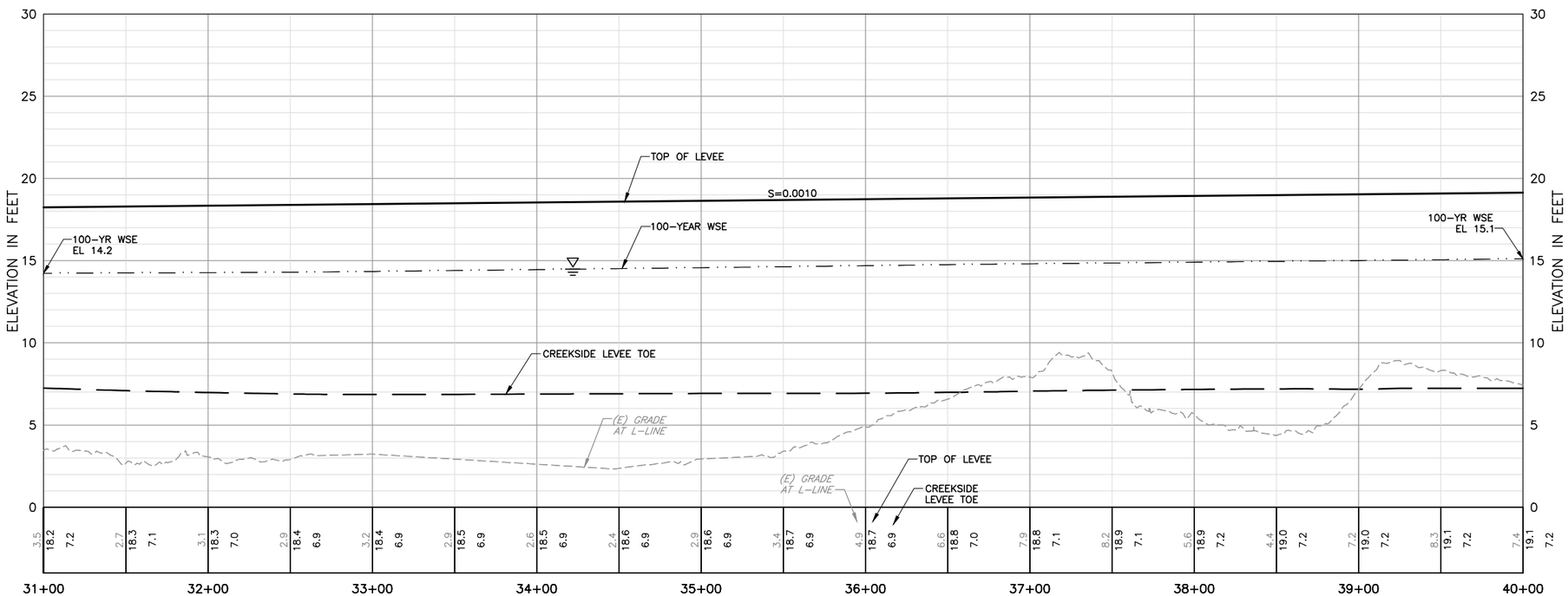

PROFILE

HORIZ: 1"=40'
VERT: 1"=4'

KEY NOTE:

1. AC PAVING PER SECTION F ON SHEET C-33.
2. CONSTRUCT BENCH WITHIN CREEK. SEE SHEETS X-9 TO X-11.
3. REMOVE ABANDONED SANITARY SEWER LINE PER LIMITS SHOWN ON SHEET C-43.
4. 6' CHAIN LINK FENCE PER 1/C-35
5. SEE SHEETS X-11 THRU X-13 FOR RE-ALIGNMENT OF LOW FLOW CHANNEL.
6. SEE SHEET C-6 FOR SFC-LINE ALIGNMENT LINE AND CURVE TABLE.

REV	DESCRIPTION	DATE	APPR.
	DRAFT 100% AUGUST 2014		

HDR Engineering, Inc.

DATE: JULY 2014
DESIGN: L. JONES
DRAWN: H. SUAREZ
CHECKED: P. HRADILEK

ENGINEERING CERTIFICATION
REGISTERED PROFESSIONAL ENGINEER LANCE M. JONES 66374 Exp. 06-30-15 CIVIL STATE OF CALIFORNIA
PRELIMINARY
PROJECT ENGINEER DATE

SAN FRANCISQUITO CREEK JOINT POWERS AUTHORITY
ACCEPTED BY DISTRICT
PROJECT ENGINEER DATE

PROJECT NAME AND SHEET DESCRIPTION:
SAN FRANCISQUITO CREEK FLOOD REDUCTION, ECOSYSTEM RESTORATION, & RECREATION PROJECT
PLAN AND PROFILE – (L-LINE)
STATION 31+00 TO 40+00

SCALE: AS SHOWN
VERIFY SCALES: 0 1"
BAR IS ONE INCH ON ORIGINAL DRAWING IF NOT ONE INCH ON THIS SHEET, ADJUST SCALES ACCORDINGLY

PROJECT NUMBER: 26284002
SHEET CODE: C-13
SHEET NUMBER: 27 OF 119

DOCUMENT NUMBER: SFC-LP-C-1028-XXXXXX

USERNAME: BillShad Tue 08 Jul 2008 09:32am
FILENAME: C:\pwworking\sac\d0171341\C-13

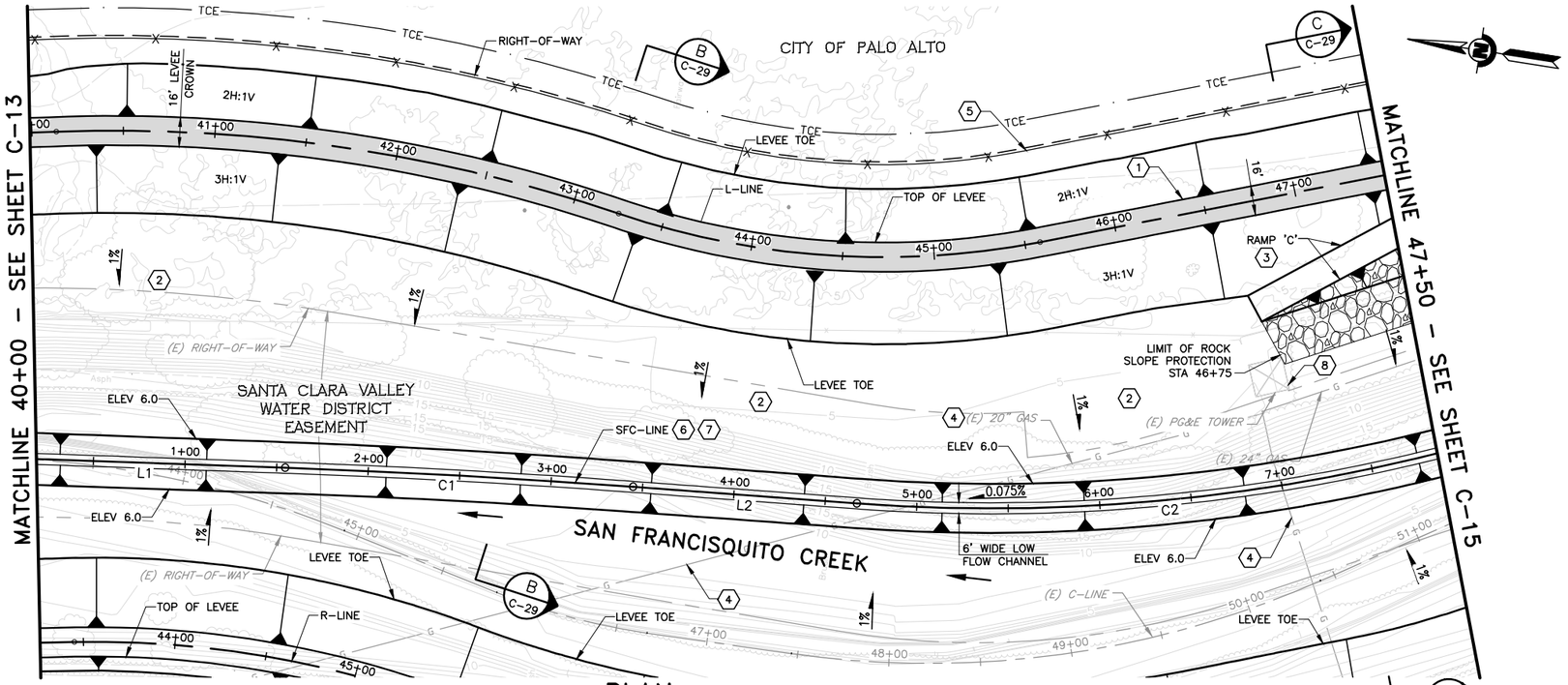

PLAN

SCALE: 1"=40'

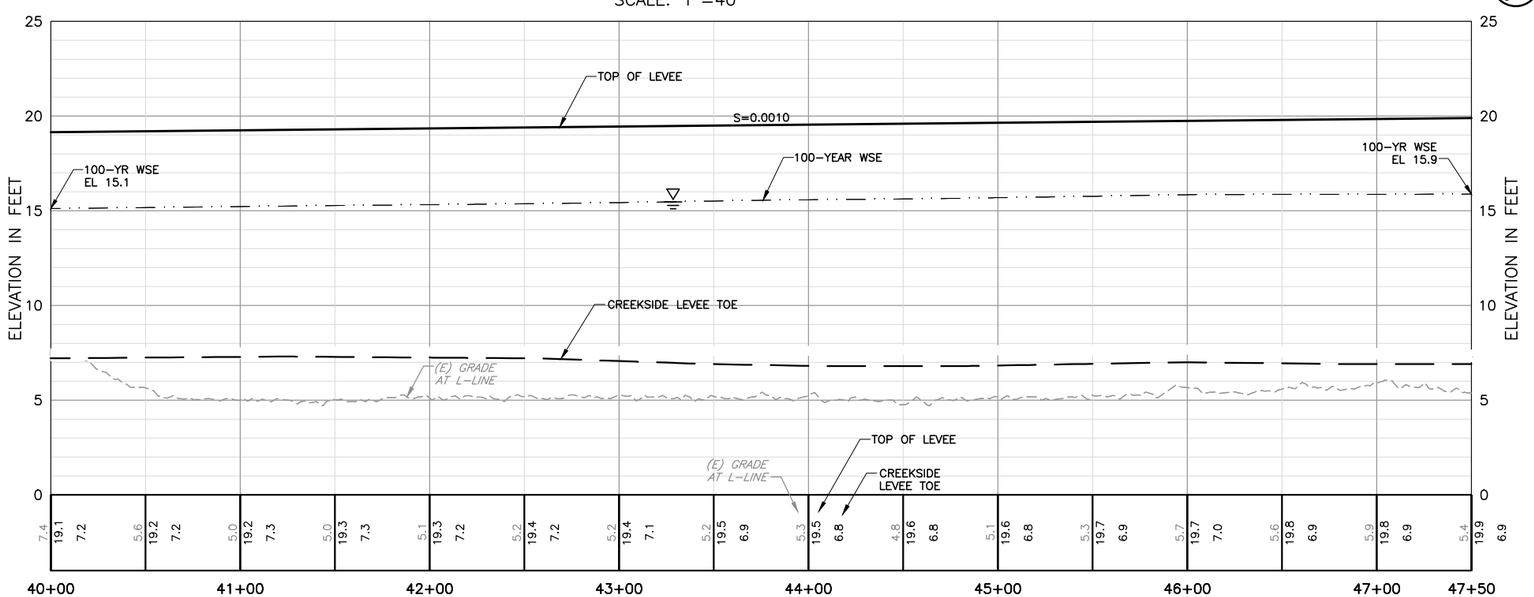

PROFILE

HORIZ: 1"=40'
VERT: 1"=4'

KEY NOTE:

1. AC PAVING PER (F / C–33)
2. CONSTRUCT BENCH WITHIN CREEK. SEE SHEETS X–11 TO X–13.
3. SEE SHEET C–19 FOR RAMP DETAIL.
4. GAS LINE SHOWN WAS RELOCATED BY PG&E. CONTRACTOR TO COORDINATE WITH PG&E FOR RELOCATION OF NEW GAS MAIN.
5. 6' CHAIN LINK FENCE PER (1 / C–35)
6. SEE SHEETS X–11 THRU X–13 FOR RE–ALIGNMENT OF LOW FLOW CHANNEL.
7. SEE SHEET C–6 FOR SFC–LINE ALIGNMENT LINE AND CURVE TABLE.
8. EXISTING PG&E TOWER SHOWN WAS RELOCATED BY PG&E. CONTRACTOR SHALL LOCATE AND PROTECT THE NEW TOWER.

REV	DESCRIPTION	DATE	APPR.
	DRAFT 100% AUGUST 2014		

HDR Engineering, Inc.

DATE: JULY 2014
DESIGN: L. JONES
DRAWN: H. SUAREZ
CHECKED: P. HRADILEK

ENGINEERING CERTIFICATION
REGISTERED PROFESSIONAL ENGINEER LANCE M. JONES C 68074 Exp. 06–30–15 CIVIL STATE OF CALIFORNIA
PRELIMINARY
PROJECT ENGINEER DATE

SAN FRANCISQUITO CREEK JOINT POWERS AUTHORITY
ACCEPTED BY DISTRICT
PROJECT ENGINEER DATE

PROJECT NAME AND SHEET DESCRIPTION:
SAN FRANCISQUITO CREEK FLOOD REDUCTION, ECOSYSTEM RESTORATION, & RECREATION PROJECT
PLAN AND PROFILE – (L–LINE) STATION 40+00 TO 47+50

SCALE: AS SHOWN
VERIFY SCALES: 0 1"
BAR IS ONE INCH ON ORIGINAL DRAWING IF NOT ONE INCH ON THIS SHEET, ADJUST SCALES ACCORDINGLY

PROJECT NUMBER: 26284002
SHEET CODE: C–14
SHEET NUMBER: 28 OF 119

DOCUMENT NUMBER: SFC_LP–C–1028–XXXXXXX
USERNAME: BillShad Tue 08 Jul 2008 09:32am
FILENAME: C:\pwworking\sac\d0171341\C–14

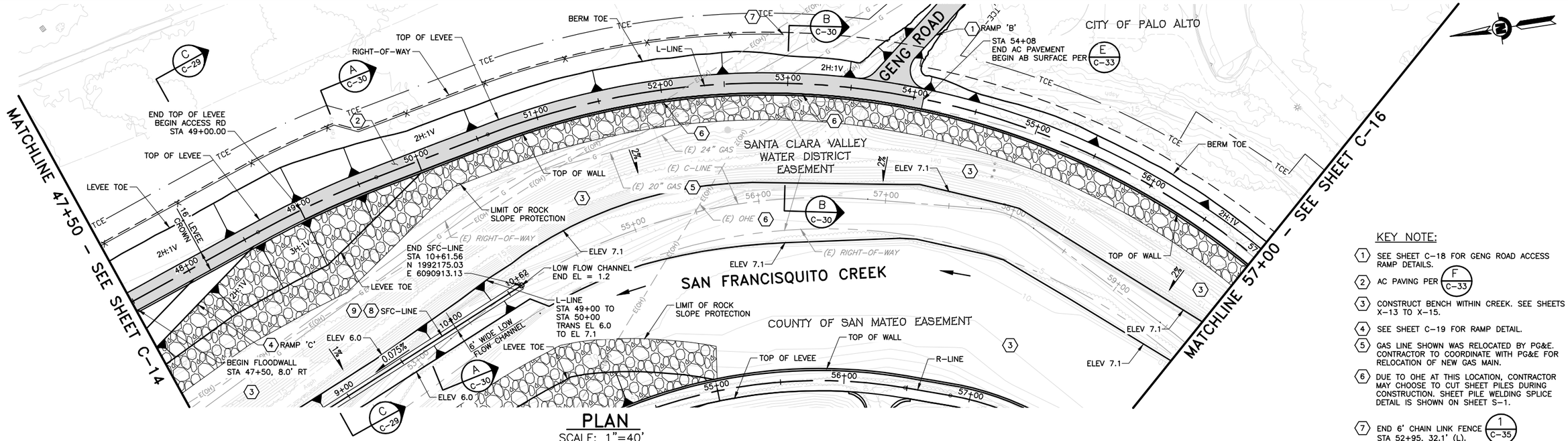

PLAN

SCALE: 1"=40'

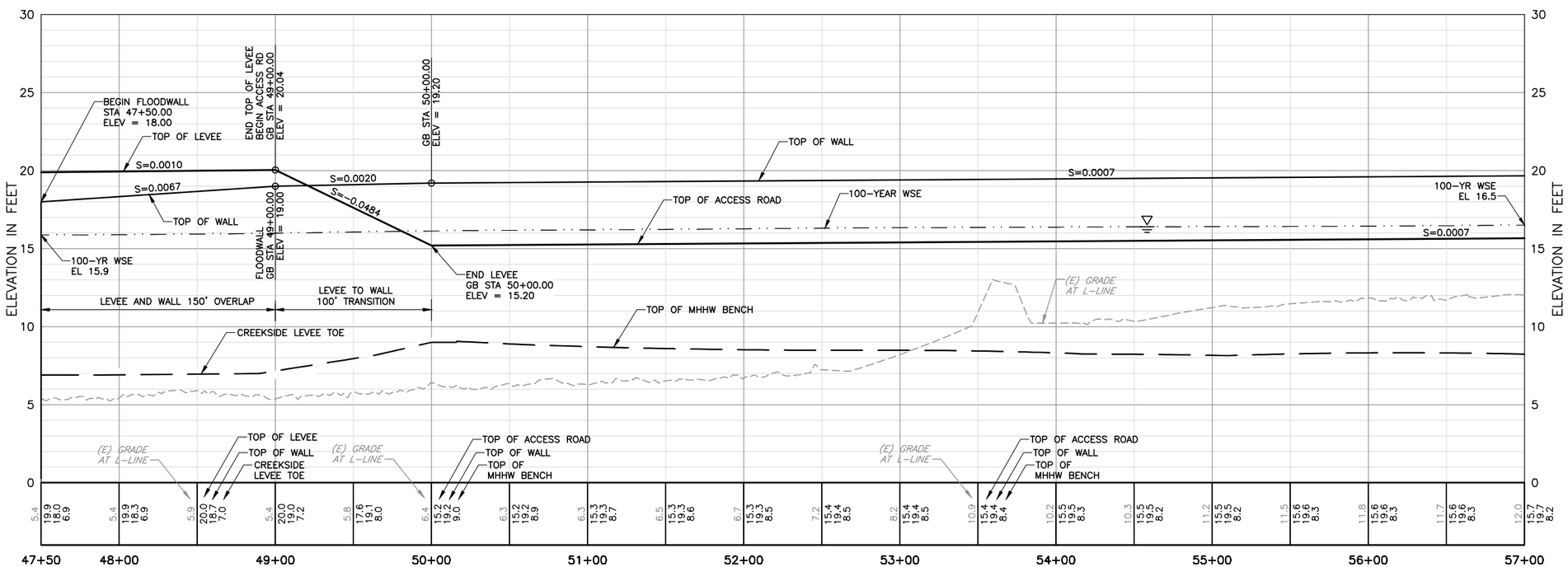

PROFILE

HORIZ: 1"=40'
VERT: 1"=4'

KEY NOTE:

1. SEE SHEET C-18 FOR GENG ROAD ACCESS RAMP DETAILS.
2. AC PAVING PER F C-33
3. CONSTRUCT BENCH WITHIN CREEK. SEE SHEETS X-13 TO X-15.
4. SEE SHEET C-19 FOR RAMP DETAIL.
5. GAS LINE SHOWN WAS RELOCATED BY PG&E. CONTRACTOR TO COORDINATE WITH PG&E FOR RELOCATION OF NEW GAS MAIN.
6. DUE TO OHE AT THIS LOCATION, CONTRACTOR MAY CHOOSE TO CUT SHEET PILES DURING CONSTRUCTION. SHEET PILE WELDING SPLICE DETAIL IS SHOWN ON SHEET S-1.
7. END 6' CHAIN LINK FENCE 1 C-35 STA 52+95, 32.1' (L). CONNECT TO (E) FENCE.
8. SEE SHEETS X-11 THRU X-13 FOR RE-ALIGNMENT OF LOW FLOW CHANNEL.
9. SEE SHEET C-6 FOR SFC-LINE ALIGNMENT LINE AND CURVE TABLE.

REV	DESCRIPTION	DATE	APPR.
	DRAFT 100% AUGUST 2014		

HDR Engineering, Inc.

DATE: JULY 2014
DESIGN: L. JONES
DRAWN: H. SUAREZ
CHECKED: P. HRADILEK

ENGINEERING CERTIFICATION
REGISTERED PROFESSIONAL ENGINEER LANCE M. JONES C 68374 Exp. 09-30-15 CIVIL STATE OF CALIFORNIA
PRELIMINARY
PROJECT ENGINEER DATE

SAN FRANCISQUITO CREEK JOINT POWERS AUTHORITY
ACCEPTED BY DISTRICT
PROJECT ENGINEER DATE

PROJECT NAME AND SHEET DESCRIPTION:
SAN FRANCISQUITO CREEK FLOOD REDUCTION, ECOSYSTEM RESTORATION, & RECREATION PROJECT
PLAN AND PROFILE – (L-LINE)
STATION 47+50 TO 57+00

SCALE: AS SHOWN
VERIFY SCALES: 0 1" BAR IS ONE INCH ON ORIGINAL DRAWING IF NOT ONE INCH ON THIS SHEET, ADJUST SCALES ACCORDINGLY
PROJECT NUMBER: 26284002
SHEET CODE: C-15
SHEET NUMBER: 29 OF 119

DOCUMENT NUMBER: SFC_LP-C-1028-XXXXXXX

USERNAME: BillShad Tue 08 Jul 2008 09:32am
FILENAME: C:\pwworking\sac\d0171341\C-15

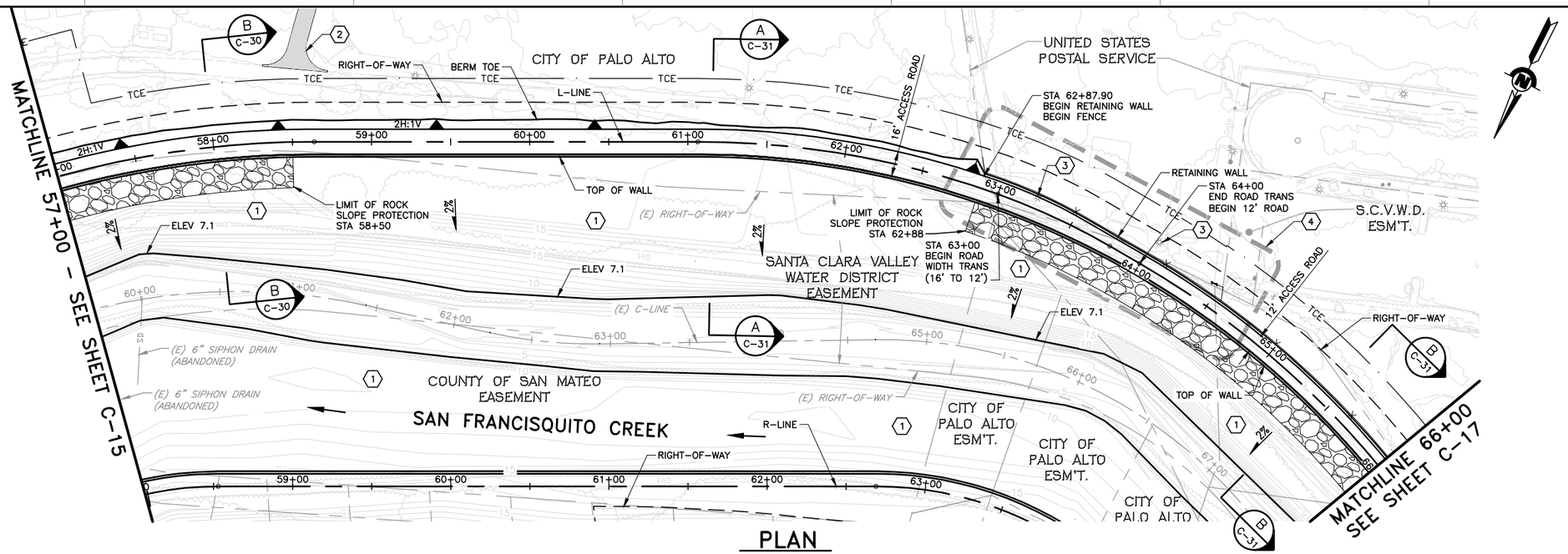

PLAN

SCALE: 1"=40'

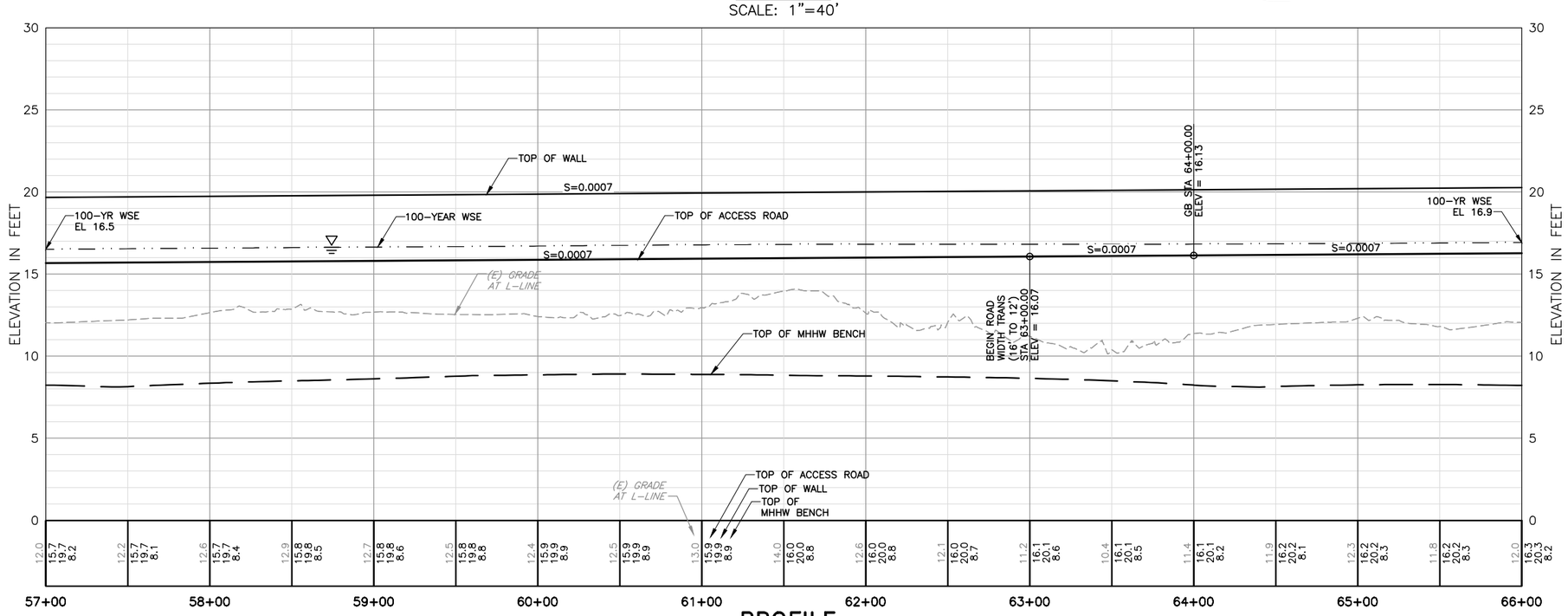

PROFILE

HORIZ: 1"=40'
VERT: 1"=4'

KEY NOTE:

1. CONSTRUCT BENCH WITHIN CREEK. SEE SHEETS X-15 TO X-17.
2. SEE SHEET C-23 FOR HAMMERHEAD TURNAROUND DETAILS.
3. RELOCATE EXISTING ELECTROLIER. CONTRACTOR TO COORDINATE WITH THE CITY OF PALO ALTO.
4. SEE SHEET C-37 FOR FENCE DETAILS AT USPS.

REV	DESCRIPTION	DATE	APPR.
	DRAFT 100% AUGUST 2014		

HDR Engineering, Inc.

DATE: JULY 2014
DESIGN: L. JONES
DRAWN: H. SUAREZ
CHECKED: P. HRADILEK

ENGINEERING CERTIFICATION
REGISTERED PROFESSIONAL ENGINEER LANCE M. JONES 68324 Exp. 06-30-15 CIVIL STATE OF CALIFORNIA
PRELIMINARY
PROJECT ENGINEER DATE

SAN FRANCISQUITO CREEK JOINT POWERS AUTHORITY
ACCEPTED BY DISTRICT
PROJECT ENGINEER DATE

PROJECT NAME AND SHEET DESCRIPTION:
SAN FRANCISQUITO CREEK FLOOD REDUCTION, ECOSYSTEM RESTORATION, & RECREATION PROJECT
PLAN AND PROFILE – (L-LINE)
STATION 57+00 TO 66+00

SCALE: AS SHOWN
VERIFY SCALES: 0 1"
BAR IS ONE INCH ON ORIGINAL DRAWING IF NOT ONE INCH ON THIS SHEET, ADJUST SCALES ACCORDINGLY

PROJECT NUMBER: 26284002
SHEET CODE: C-16
SHEET NUMBER: 30 OF 119

DOCUMENT NUMBER: SFC_LP-C-1028-XXXXXXX

USERNAME: BillShad Tue 08 Jul 2008 09:32am
FILENAME: C:\pwworking\sac\d0171341\C-16

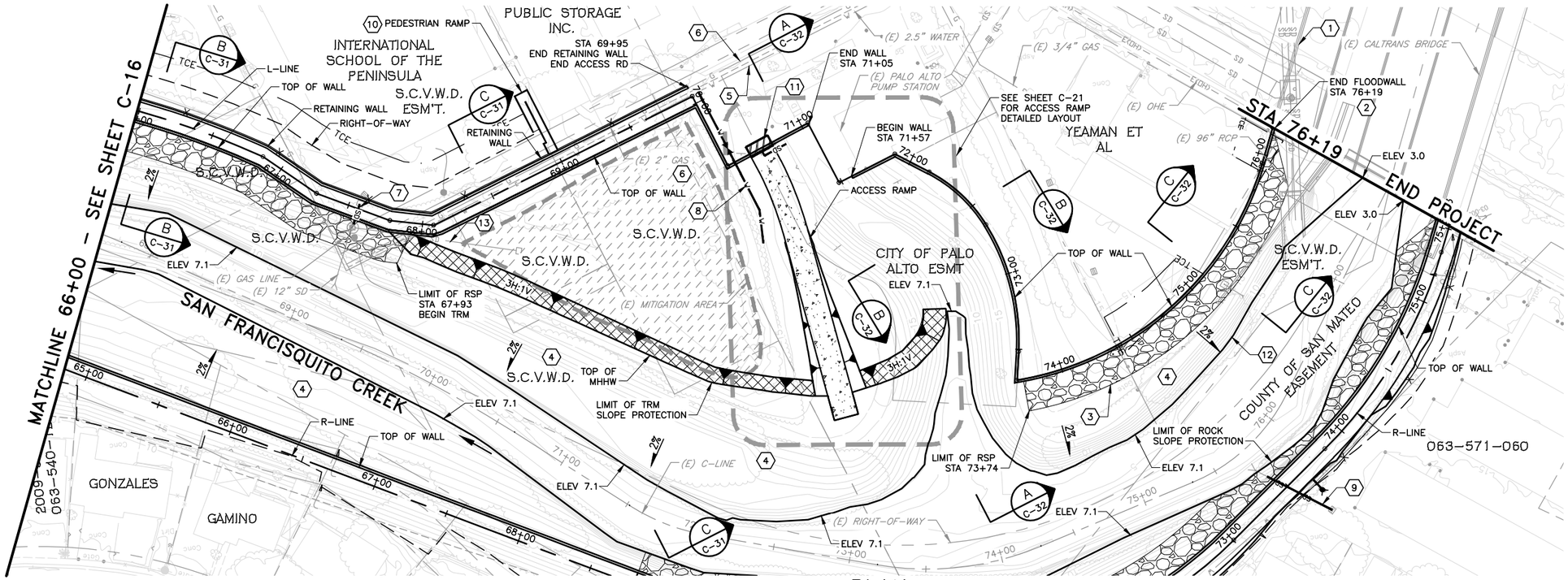

PLAN

SCALE: 1"=40'

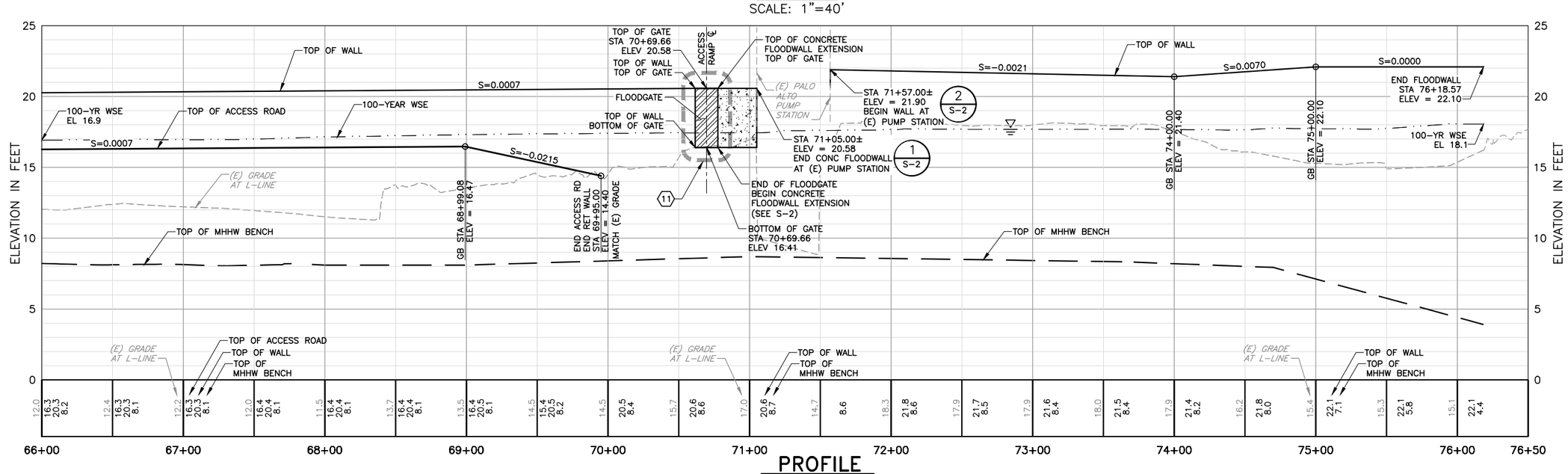

PROFILE

HORIZ: 1"=40'
VERT: 1"=4'

KEY NOTE:

1. 96" STORM DRAIN OUTFALL TO BE RELOCATED BY CALTRANS PRIOR TO CONSTRUCTION.
2. END FLOODWALL AT EXISTING BRIDGE STRUCTURE PER DETAIL ON SHEET S-1.
3. CONSTRUCT ROCK SLOPE PROTECTION AT FLOODWALL TOE PER A/C-34
4. CONSTRUCT BENCH WITHIN CREEK. SEE SHEETS X-17 TO X-19.
5. CONTRACTOR TO REMOVE EXISTING 2.5" WATER LINE. SEE SHEET C-46.
6. CONTRACTOR TO REMOVE EXISTING 2" GAS LINE. SEE SHEET C-46.
7. CONSTRUCT STORM DRAIN CROSSING PER DETAIL 'A' SHOWN ON SHEET C-48.
8. CONSTRUCT WATER LINE PER DETAIL 'B' SHOWN ON SHEET C-48.
9. CONSTRUCT STORM DRAIN CROSSING PER DETAIL 'C' SHOWN ON SHEET C-48.
10. SEE SHEET C-22 FOR INTERNATIONAL SCHOOL PEDESTRIAN RAMP DETAILS.
11. SEE SHEETS C-38, S-2, AND S-4 FOR FLOODGATE DETAILS.
12. L-LINE STA 74+70 TO STA 76+19 TRANSITION DAYLIGHT FROM EL 7.1 TO EL 3.0
13. CONSTRUCT STORM DRAIN OUTFALL PER DETAIL SHOWN ON SHEET C-49.

REV	DESCRIPTION	DATE	APPR.
	DRAFT 100% AUGUST 2014		

HDR Engineering, Inc.

DATE: JULY 2014
DESIGN: L. JONES
DRAWN: H. SUAREZ
CHECKED: P. HRADILEK

ENGINEERING CERTIFICATION
REGISTERED PROFESSIONAL ENGINEER LANCE M. JONES C 68127 Exp. 12-30-15 CIVIL STATE OF CALIFORNIA
PRELIMINARY
PROJECT ENGINEER DATE

SAN FRANCISQUITO CREEK JOINT POWERS AUTHORITY
ACCEPTED BY DISTRICT
PROJECT ENGINEER DATE

PROJECT NAME AND SHEET DESCRIPTION:
SAN FRANCISQUITO CREEK FLOOD REDUCTION, ECOSYSTEM RESTORATION, & RECREATION PROJECT
PLAN AND PROFILE – (L-LINE)
STATION 66+00 TO 76+50

SCALE: AS SHOWN
VERIFY SCALES: 0 1"
BAR IS ONE INCH ON ORIGINAL DRAWING IF NOT ONE INCH ON THIS SHEET, ADJUST SCALES ACCORDINGLY

PROJECT NUMBER: 26284002
SHEET CODE: C-17
SHEET NUMBER: 31 OF 119

DOCUMENT NUMBER: SFC_LP-C-1028-XXXXXX

USERNAME: BillShad Tue 08 Jul 2008 09:32am
FILENAME: C:\pwworking\sac\d0171341\C-17

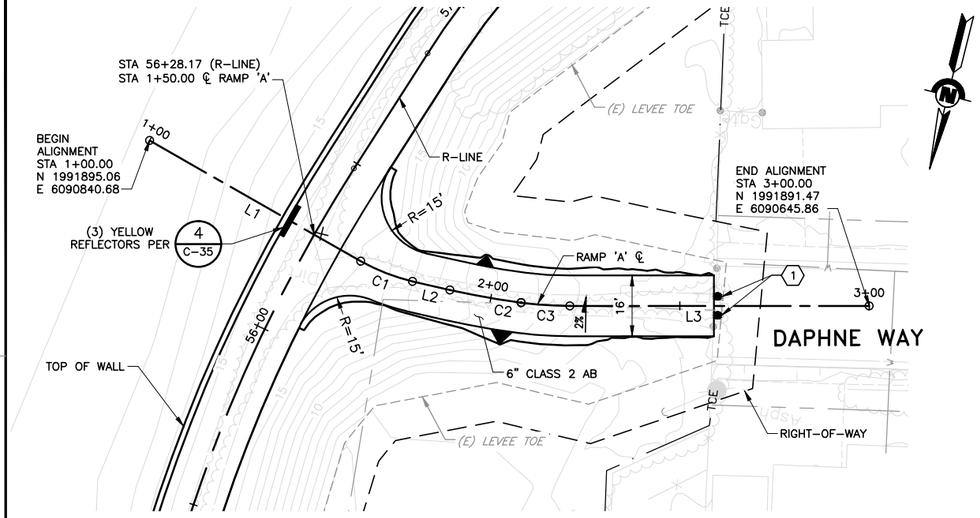

PLAN – RAMP 'A'

SCALE: 1"=20'

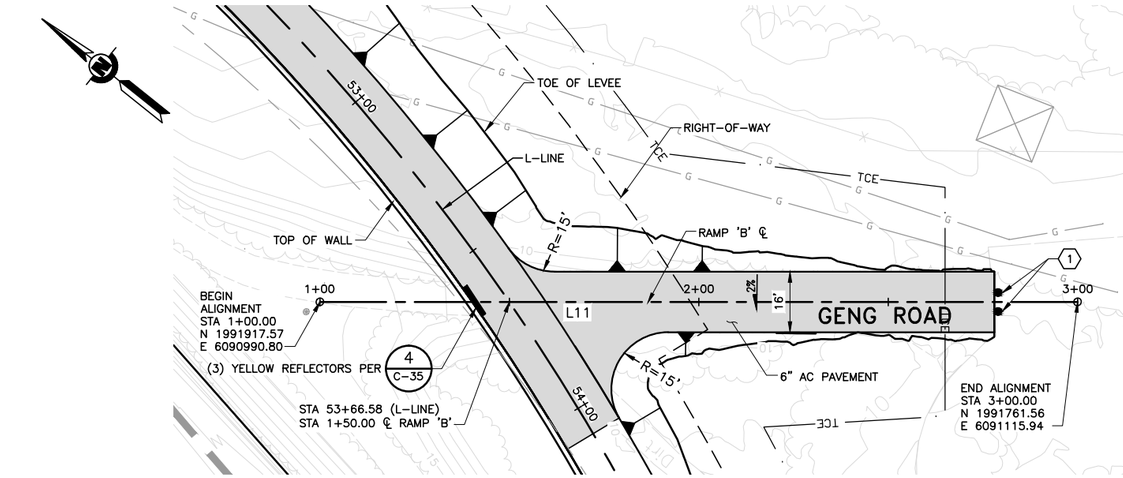

PLAN – RAMP 'B'

SCALE: 1"=20'

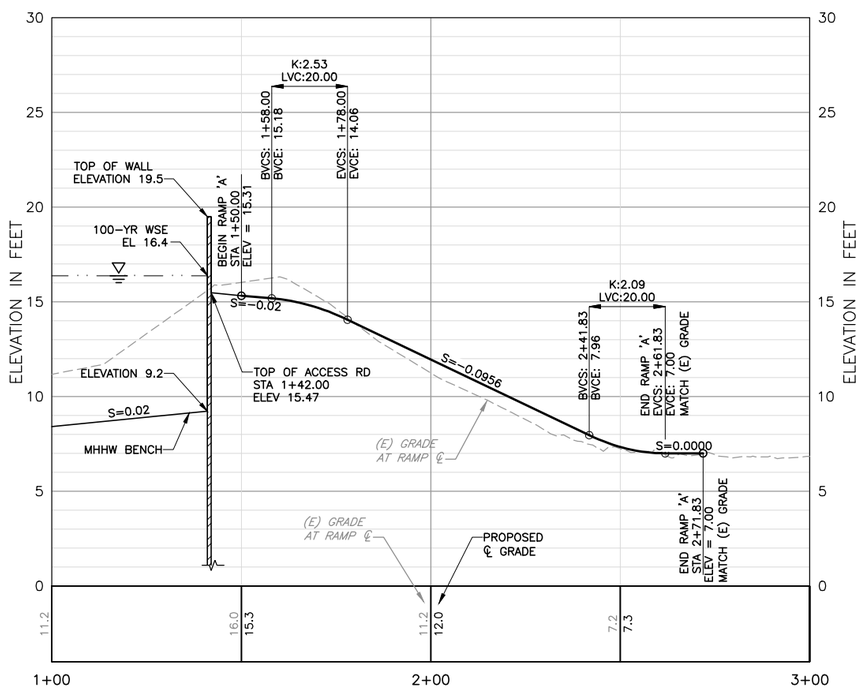

PROFILE – RAMP 'A'

HORIZ: 1"=20'
VERT: 1"=4'

RAMP 'A' ALIGNMENT LINE AND CURVE TABLE

NUMBER	START STA	END STA	CURVE PI	LENGTH	DELTA	RADIUS	LINE/CHORD BRNG
L1	1+00.00	1+64.22	N/A	64.22'	N/A	N/A	N74°17'01"W
C1	1+64.22	1+78.89	1+71.61	14.67'	16°48'41"	50.00'	N82°41'21"W
L2	1+78.89	1+89.03	N/A	10.14'	N/A	N/A	S88°54'18"W
C2	1+89.03	2+08.11	1+98.58	19.08'	5°27'58"	200.00'	S86°10'19"W
C3	2+08.11	2+21.05	2+14.59	12.94'	7°24'58"	100.00'	S79°43'51"W
L3	2+21.05	3+00.00	N/A	78.95'	N/A	N/A	S76°01'22"W

RAMP 'B' ALIGNMENT LINE TABLE

NUMBER	START STA	END STA	CURVE PI	LENGTH	DELTA	RADIUS	LINE/CHORD BRNG
L11	1+00.00	3+00.00	N/A	200.00'	N/A	N/A	S38°44'04"E

KEY NOTE:

(1) INSTALL FOLDABLE BOLLARDS PER 2 C-34 CENTER OF BOLLARD IS OFFSET 2.5' FROM RAMP CENTERLINE.

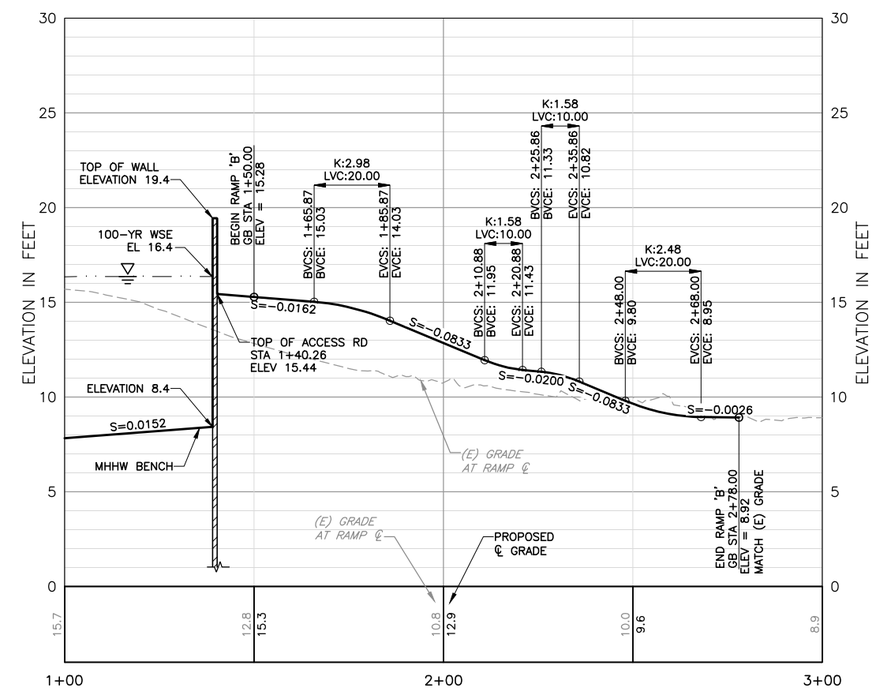

PROFILE – RAMP 'B'

HORIZ: 1"=20'
VERT: 1"=4'

USERNAME: BillShad Tue 08 Jul 2008 09:32am
FILENAME: C:\pwworking\sac\d0171341\C-18

DOCUMENT NUMBER: SFC_LP-C-1028-XXXXXX

REV	DESCRIPTION	DATE	APPR.
	DRAFT 100% AUGUST 2014		

HDR Engineering, Inc.

DATE JULY 2014
DESIGN L. JONES
DRAWN H. SUAREZ
CHECKED P. HRADILEK

ENGINEERING CERTIFICATION
REGISTERED PROFESSIONAL ENGINEER LANCE M. JONES 68376 Exp. 06-30-15 CIVIL STATE OF CALIFORNIA
PRELIMINARY
PROJECT ENGINEER DATE

SAN FRANCISQUITO CREEK JOINT POWERS AUTHORITY
ACCEPTED BY DISTRICT
PROJECT ENGINEER DATE

PROJECT NAME AND SHEET DESCRIPTION:
SAN FRANCISQUITO CREEK FLOOD REDUCTION, ECOSYSTEM RESTORATION, & RECREATION PROJECT
PLAN AND PROFILE – RAMP 'A' (R-LINE)
PLAN AND PROFILE – RAMP 'B' (L-LINE)

SCALE: AS SHOWN
VERIFY SCALES: 0 1" BAR IS ONE INCH ON ORIGINAL DRAWING IF NOT ONE INCH ON THIS SHEET, ADJUST SCALES ACCORDINGLY

PROJECT NUMBER: 26284002
SHEET CODE: C-18
SHEET NUMBER: 32 OF 119

RAMP 'C' ALIGNMENT LINE TABLE

NUMBER	START STA	END STA	CURVE PI	LENGTH	DELTA	RADIUS	LINE/CHORD BRNG
L1	0+00.00	4+50.00	N/A	450.00'	N/A	N/A	S37°12'34"E

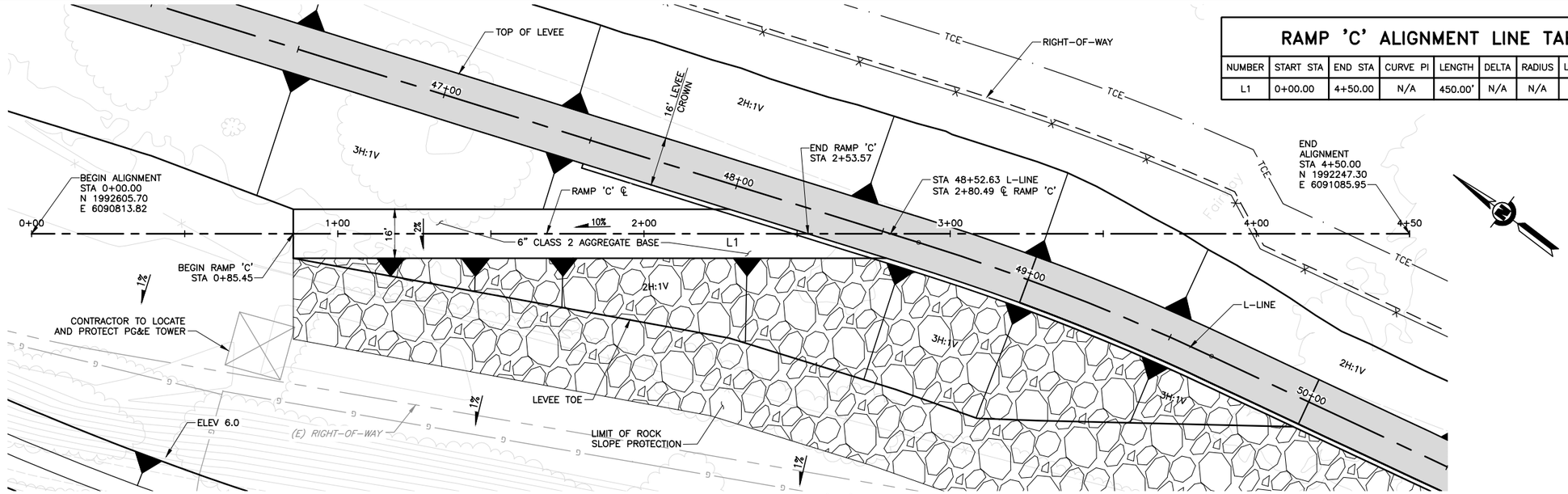

PLAN – RAMP 'C'

SCALE: 1"=20'

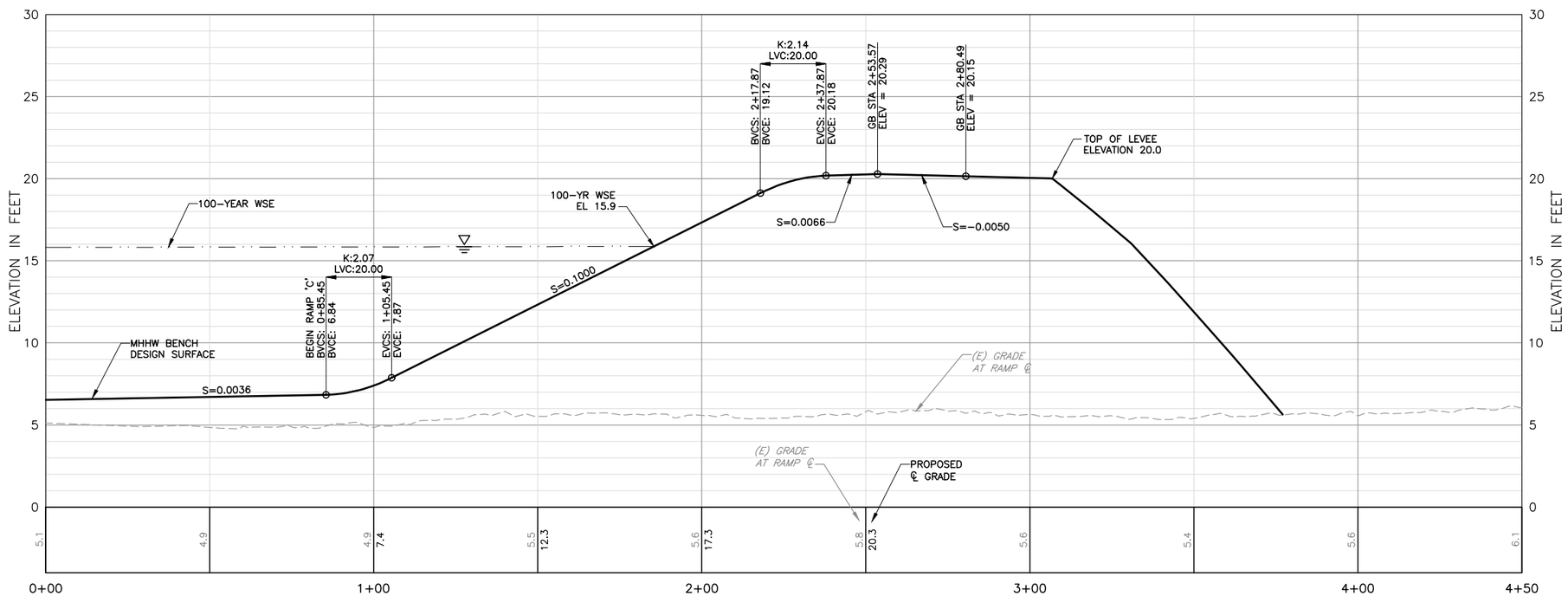

PROFILE – RAMP 'C'

HORIZ: 1"=20'
VERT: 1"=4'

REV	DESCRIPTION	DATE	APPR.
	DRAFT 100% AUGUST 2014		

HDR Engineering, Inc.

DATE	
JULY 2014	
DESIGN	L. JONES
DRAWN	H. SUAREZ
CHECKED	P. HRADILEK

ENGINEERING CERTIFICATION

REGISTERED PROFESSIONAL ENGINEER LANCE M. JONES 68374 Exp. 09-30-15 CIVIL STATE OF CALIFORNIA

PRELIMINARY

PROJECT ENGINEER DATE

SAN FRANCISQUITO CREEK JOINT POWERS AUTHORITY

ACCEPTED BY DISTRICT

PROJECT ENGINEER DATE

PROJECT NAME AND SHEET DESCRIPTION:

SAN FRANCISQUITO CREEK FLOOD REDUCTION, ECOSYSTEM RESTORATION, & RECREATION PROJECT

PLAN AND PROFILE – RAMP 'C' (L-LINE)

SCALE: AS SHOWN

VERIFY SCALES: 0 — 1"
BAR IS ONE INCH ON ORIGINAL DRAWING IF NOT ONE INCH ON THIS SHEET, ADJUST SCALES ACCORDINGLY

PROJECT NUMBER: 26284002

SHEET CODE: C-19

SHEET NUMBER: 33 OF 119

DOCUMENT NUMBER: SFC_LP-C-1028-XXXXXXX

USERNAME: BillShad Tue 08 Jul 2008 09:32am
FILENAME: C:\pwworking\sac\d0171341\C-19

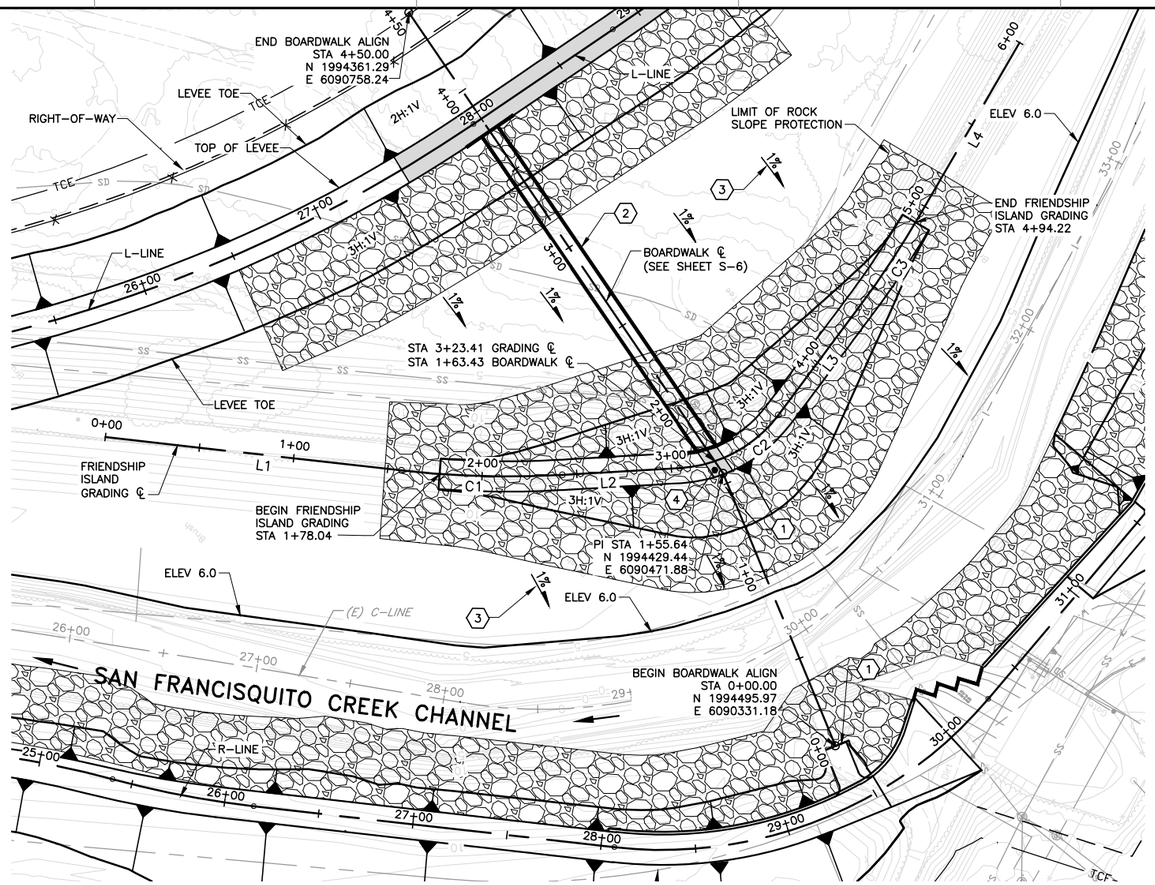

PLAN – FRIENDSHIP ISLAND

HORIZ: 1"=40'

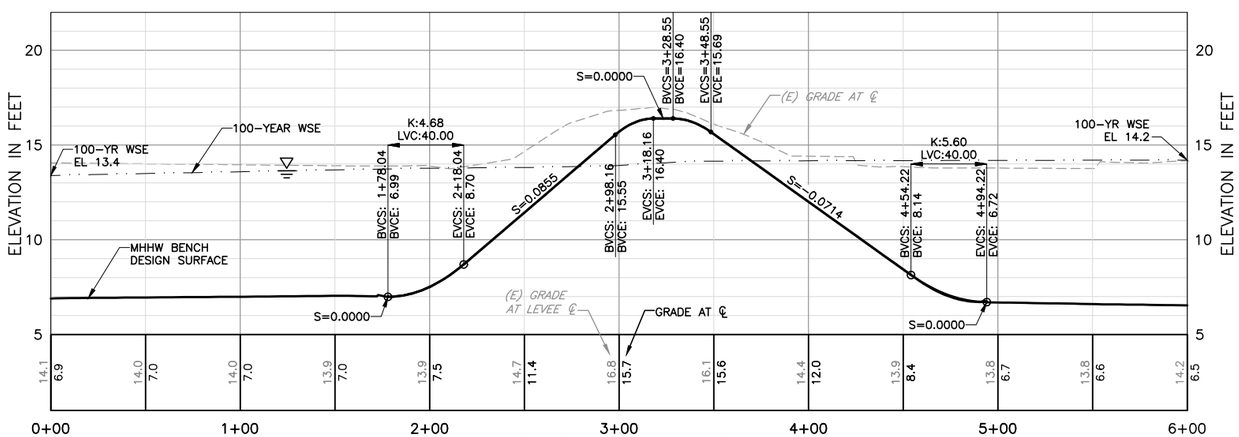

PROFILE – FRIENDSHIP ISLAND

HORIZ: 1"=40'
VERT: 1"=4'

KEY NOTE:

1. CONTRACTOR TO PROTECT EXISTING BRIDGE AND ABUTMENT.
2. NEW BOARDWALK. SEE SHEETS S-6 AND S-10.
3. THE DIRECTION OF THE 1% GRADING IS PERPENDICULAR TO "L-LINE".
4. AC PAVEMENT BETWEEN (E) BRIDGE AND NEW BOARDWALK (F / C-33)
5. INSTALL FOLDABLE BOLLARD PER DETAIL '2' ON SHEET C-34. CENTER ON 10' WIDE RAMP.

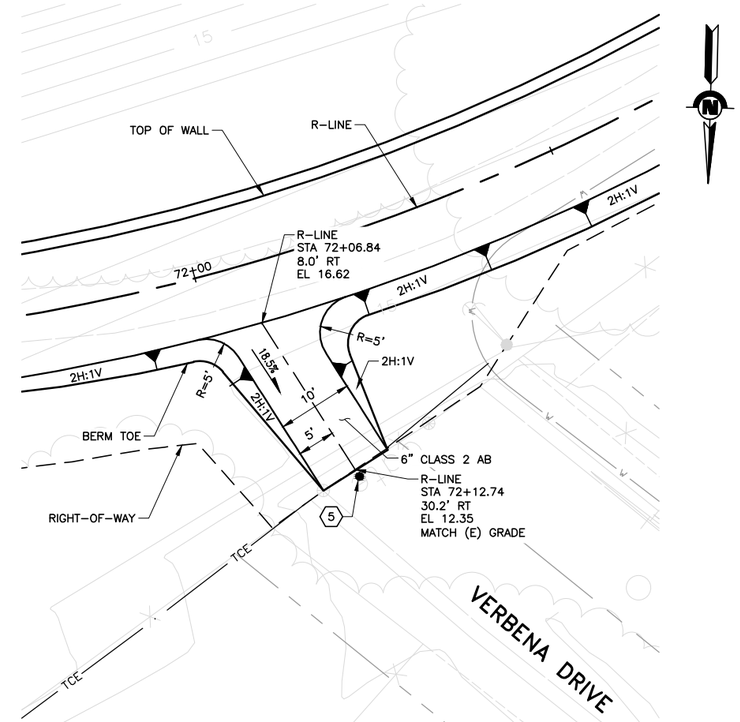

PLAN – PEDESTRIAN RAMP AT VERBENA DRIVE

HORIZ: 1"=10'

FRIENDSHIP ISLAND ALIGNMENT LINE AND CURVE TABLE

NUMBER	START STA	END STA	CURVE PI	LENGTH	DELTA	RADIUS	LINE/CHORD BRNG	START POINT COORDINATE	END POINT COORDINATE
L1	0+00.00	1+57.33	N/A	157.33'	N/A	N/A	S54°07'22"W	N 1994634.82, E 6090725.98	N 1994542.62, E 6090598.50
C1	1+57.33	2+42.46	2+00	85.12'	9°45'16"	500.00'	S49°14'44"W	N 1994542.62, E 6090598.50	N 1994487.11, E 6090534.09
L2	2+42.46	3+04.49	N/A	62.03'	N/A	N/A	S44°22'06"W	N 1994487.11, E 6090534.09	N 1994442.77, E 6090490.72
C2	3+04.49	3+65.41	3+37.03	60.92'	49°52'03"	70.00'	S19°26'04"W	N 1994442.77, E 6090490.72	N 1994387.11, E 6090471.08
L3	3+65.41	4+36.34	N/A	70.92'	N/A	N/A	S5°29'57"E	N 1994387.11, E 6090471.08	N 1994316.52, E 6090477.88
C3	4+36.34	4+95.67	4+66.04	59.34'	6°47'58"	500.00'	S8°53'56"E	N 1994316.52, E 6090477.88	N 1994257.93, E 6090487.05
L4	4+95.67	6+00.00	N/A	104.33'	N/A	N/A	S12°17'55"E	N 1994257.93, E 6090487.05	N 1994156.00, E 6090509.27

REV	DESCRIPTION	DATE	APPR.
	DRAFT 100% AUGUST 2014		

HDR Engineering, Inc.

DATE: JULY 2014
DESIGN: L. JONES
DRAWN: H. SUAREZ
CHECKED: P. HRADILEK

ENGINEERING CERTIFICATION
REGISTERED PROFESSIONAL ENGINEER LANCE M. JONES 68374 Exp. 06-30-15 CIVIL STATE OF CALIFORNIA
PRELIMINARY
PROJECT ENGINEER DATE

SAN FRANCISQUITO CREEK JOINT POWERS AUTHORITY
ACCEPTED BY DISTRICT
PROJECT ENGINEER DATE

PROJECT NAME AND SHEET DESCRIPTION:
SAN FRANCISQUITO CREEK FLOOD REDUCTION, ECOSYSTEM RESTORATION, & RECREATION PROJECT
PLAN & PROFILE – FRIENDSHIP ISLAND GRADING
PLAN – PEDESTRIAN RAMP

SCALE: AS SHOWN
VERIFY SCALES: 0 1" BAR IS ONE INCH ON ORIGINAL DRAWING IF NOT ONE INCH ON THIS SHEET, ADJUST SCALES ACCORDINGLY

PROJECT NUMBER: 26284002
SHEET CODE: C-20
SHEET NUMBER: 34 OF 119

DOCUMENT NUMBER: SFC_LP-C-1028-XXXXXX

USERNAME: BillShad Tue 08 Jul 2008 09:32am
FILENAME: C:\pwworking\sac\d0171341\C-20

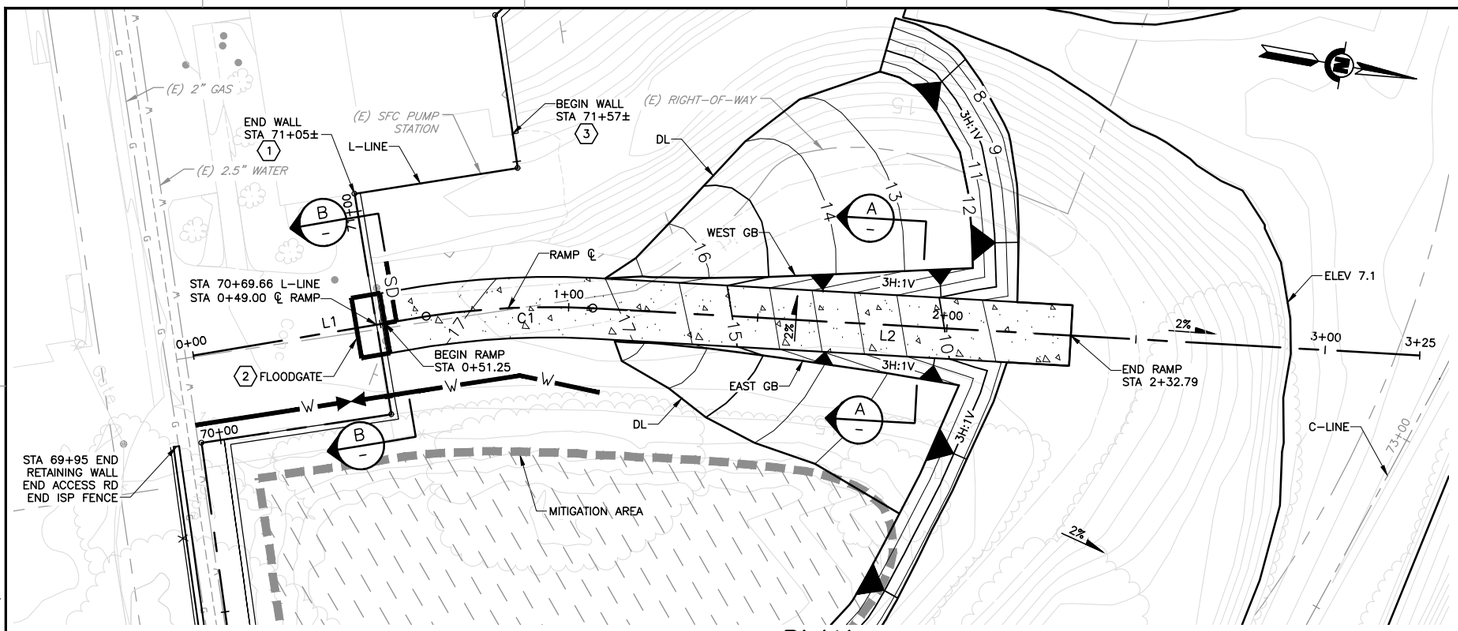

PLAN

SCALE: 1"=20'

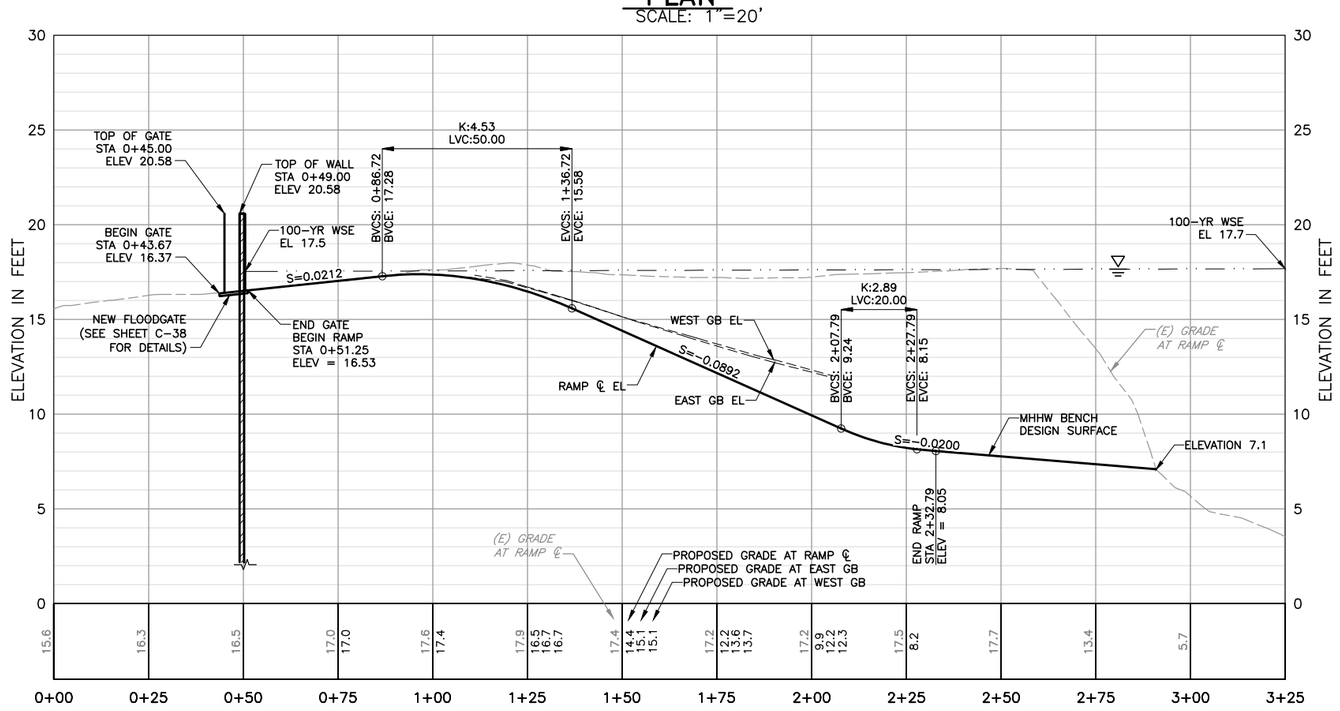

PROFILE

HORIZ: 1"=20'
VERT: 1"=4'

ACCESS RAMP ALIGNMENT LINE AND CURVE TABLE

NUMBER	START STA	END STA	CURVE PI	LENGTH	DELTA	RADIUS	LINE/CHORD BRNG	START POINT COORDINATE	END POINT COORDINATE
L1	0+00.00	0+62.35	N/A	62.35'	N/A	N/A	N19°49'43"W	N 1991428.81, E 6089636.24	N 1991487.46, E 6089615.09
C1	0+62.35	1+06.42	0+84.46	44.07'	11°25'30"	221.01'	N13°05'23"W	N 1991487.46, E 6089615.09	N 1991530.32, E 6089605.13
L2	1+06.42	3+25.00	N/A	218.58'	N/A	N/A	N7°01'39"W	N 1991530.32, E 6089605.13	N 1991747.25, E 6089578.38

KEY NOTE:

1. SEE DETAIL 1 ON S-2 FOR END OF FLOODWALL CONNECTION.
2. CONSTRUCT FLOOD GATE PER DETAIIL ON SHEET C-38.
3. SEE DETAIL 2 ON S-2 FOR BEGINNING OF FLOODWALL CONNECTION.

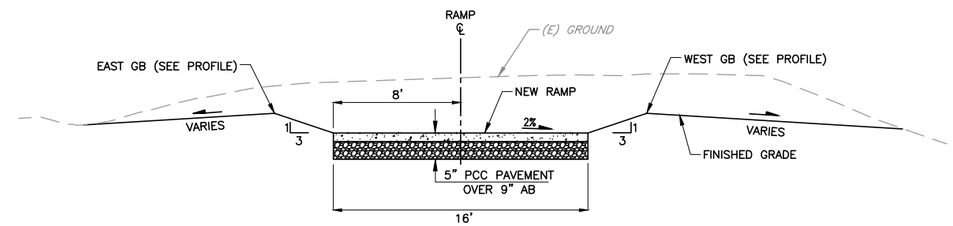

SECTION A — RAMP DETAIL

NTS

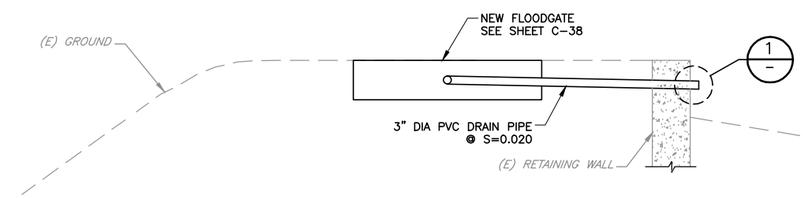

SECTION B — FLOOD GATE STORM DRAIN OUTFALL DETAIL

NTS

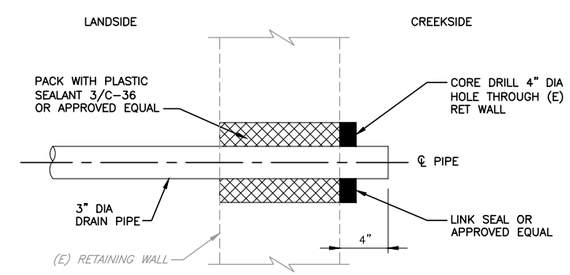

DETAIL 1 — PIPE PENETRATION OPENING

NTS

REV	DESCRIPTION	DATE	APPR.
	DRAFT 100% AUGUST 2014		

HDR Engineering, Inc.

DATE: JULY 2014
DESIGN: L. JONES
DRAWN: H. SUAREZ
CHECKED: P. HRADILEK

ENGINEERING CERTIFICATION
REGISTERED PROFESSIONAL ENGINEER LANCE M. JONES 98374 Exp. 6-30-15 CIVIL STATE OF CALIFORNIA
PRELIMINARY
PROJECT ENGINEER DATE

SAN FRANCISQUITO CREEK JOINT POWERS AUTHORITY
ACCEPTED BY DISTRICT
PROJECT ENGINEER DATE

PROJECT NAME AND SHEET DESCRIPTION:
SAN FRANCISQUITO CREEK FLOOD REDUCTION, ECOSYSTEM RESTORATION, & RECREATION PROJECT
PLAN AND PROFILE
LEFT BANK LEVEE – ACCESS RAMP

SCALE: AS SHOWN
VERIFY SCALES: 0 1"
BAR IS ONE INCH ON ORIGINAL DRAWING IF NOT ONE INCH ON THIS SHEET, ADJUST SCALES ACCORDINGLY

PROJECT NUMBER: 130806
SHEET CODE: C-21
SHEET NUMBER: 35 OF 119

DOCUMENT NUMBER: SFC_LP-C-1028-XXXXXX

USERNAME: BillShad Tue 08 Jul 2008 09:32am
FILENAME: C:\pwworking\sac\d0171341\C-21

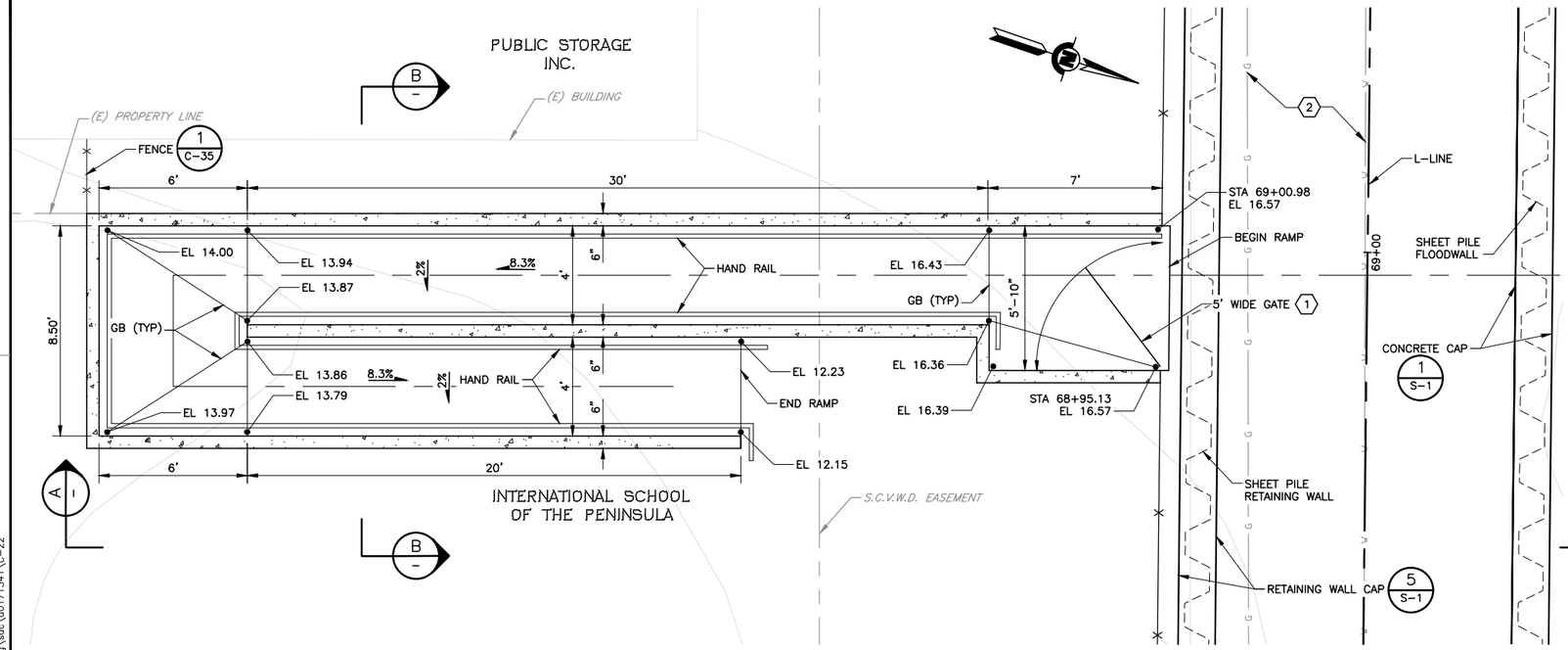

PLAN – PEDESTRIAN RAMP

SCALE: 1"=3'

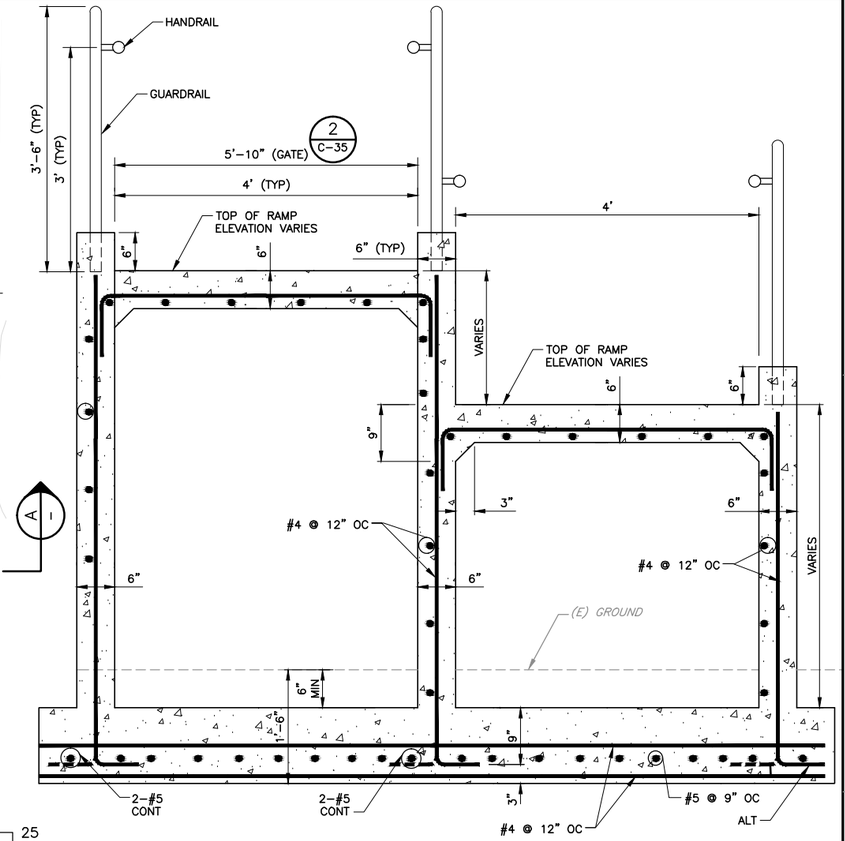

SECTION B – RAMP

SCALE: 1"=1'

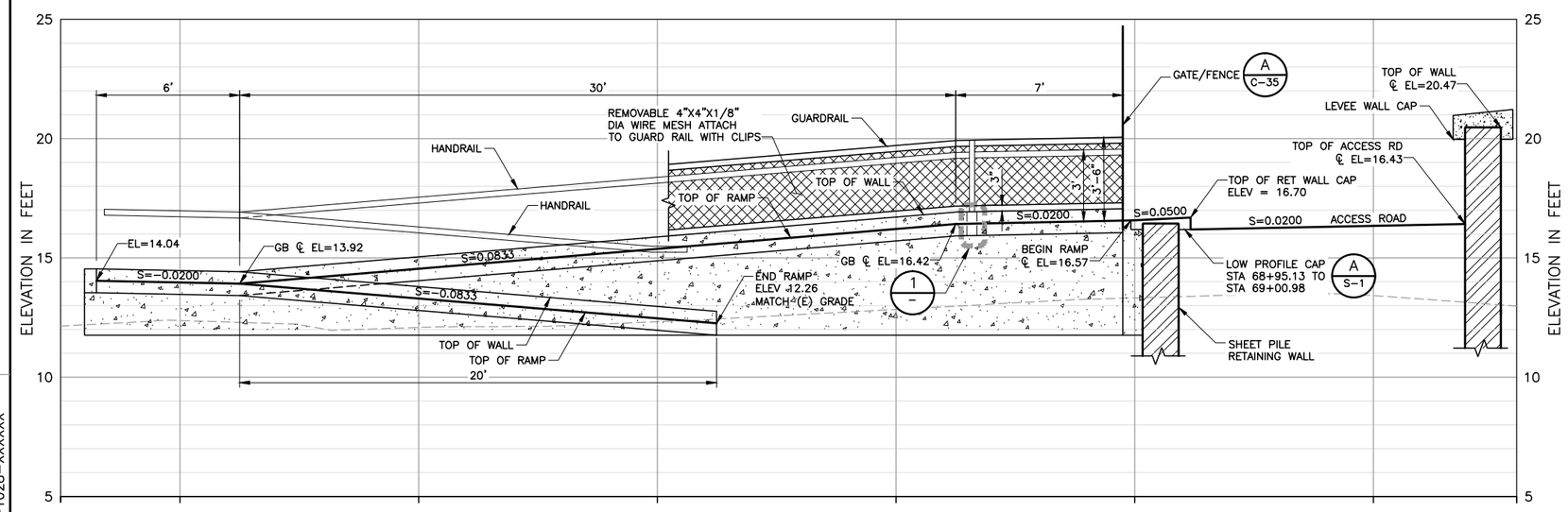

SECTION A – RAMP PROFILE

SCALE: 1"=3'

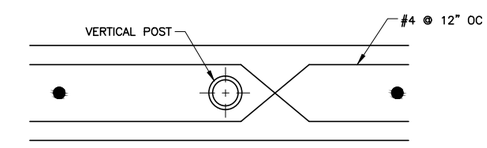

DETAIL 1 – PLAN VIEW HANDRAIL POST ANCHORAGE

NTS

KEY NOTE:

1. CONSTRUCT 5 FT WIDE GATE PER 2 C-35
2. REMOVE (E) UTILITIES PER SHEET C-46.

REV	DESCRIPTION	DATE	APPR.
	DRAFT 100% AUGUST 2014		

HDR Engineering, Inc.

DATE: JULY 2014
DESIGN: L. JONES
DRAWN: H. SUAREZ
CHECKED: P. HRADILEK

ENGINEERING CERTIFICATION: REGISTERED PROFESSIONAL ENGINEER LANCE M. JONES 68374 Exp. 12-30-15 CIVIL STATE OF CALIFORNIA — PRELIMINARY

PROJECT ENGINEER DATE

SAN FRANCISQUITO CREEK JOINT POWERS AUTHORITY

ACCEPTED BY DISTRICT

PROJECT ENGINEER DATE

PROJECT NAME AND SHEET DESCRIPTION:

SAN FRANCISQUITO CREEK FLOOD REDUCTION, ECOSYSTEM RESTORATION, & RECREATION PROJECT

PLAN AND PROFILE
INTERNATIONAL SCHOOL PEDESTRIAN RAMP

SCALE: AS SHOWN
VERIFY SCALES: 0 1"
BAR IS ONE INCH ON ORIGINAL DRAWING IF NOT ONE INCH ON THIS SHEET, ADJUST SCALES ACCORDINGLY

PROJECT NUMBER: 130806
SHEET CODE: C-22
SHEET NUMBER: 36 OF 119

DOCUMENT NUMBER: SFC_LP-C-1028-XXXXXX

USERNAME: BillShad Tue 08 Jul 2008 09:32am
FILENAME: C:\pwworking\sac\d0171341\C-22

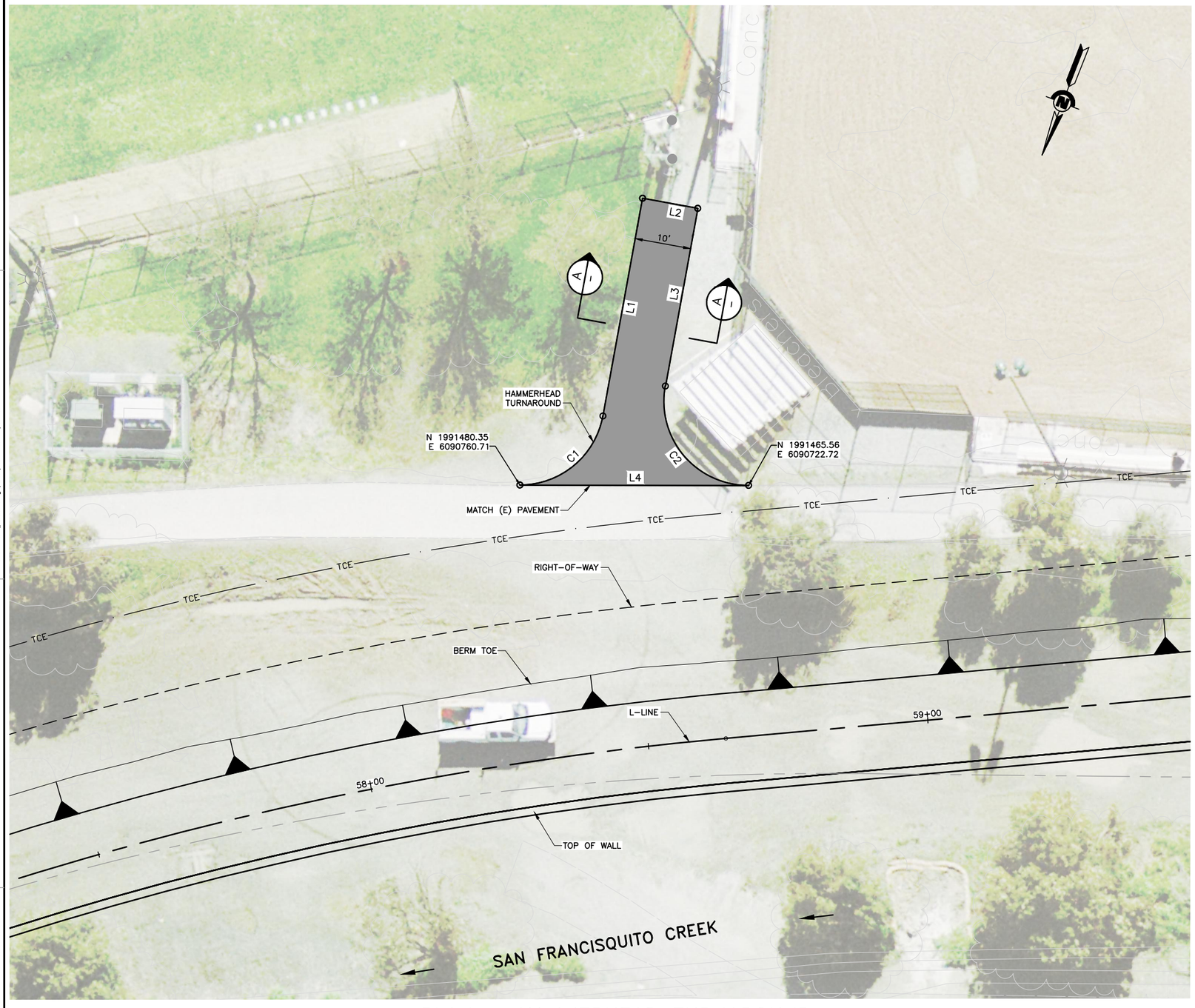

PLAN – HAMMERHEAD TURNAROUND

SCALE: 1"=10'

HAMMERHEAD LINE AND CURVE TABLE							
NUMBER	START STA	END STA	CURVE PI	LENGTH	DELTA	RADIUS	LINE/CHORD BRNG
C1	−0+00.00	0+20.88	0+12.53	20.88'	79°44'21"	15.00'	S28°52'06"W
L1	0+20.88	0+60.29	N/A	39.42'	N/A	N/A	S11°00'04"E
L2	0+60.29	0+70.29	N/A	10.00'	N/A	N/A	S78°59'56"W
L3	0+70.29	1+02.47	N/A	32.18'	N/A	N/A	N11°00'04"W
C2	1+02.47	1+28.83	1+20.57	26.36'	100°41'10"	15.00'	N61°20'39"W
L4	1+28.83	1+69.59	N/A	40.76'	N/A	N/A	N68°44'17"E

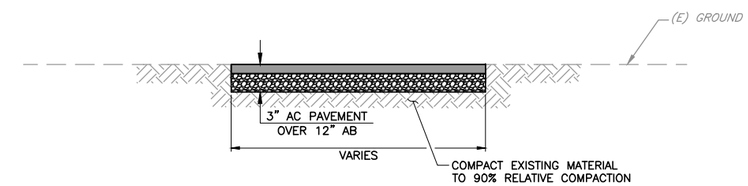

SECTION A – TYPICAL SECTION

NTS

REV	DESCRIPTION	DATE	APPR.
	DRAFT 100% AUGUST 2014		

HDR Engineering, Inc.

DATE: JULY 2014
DESIGN: L. JONES
DRAWN: H. SUAREZ
CHECKED: P. HRADILEK

ENGINEERING CERTIFICATION
REGISTERED PROFESSIONAL ENGINEER LANCE M. JONES 98374 Exp. 6-30-15 CIVIL STATE OF CALIFORNIA
PRELIMINARY
PROJECT ENGINEER DATE

SAN FRANCISQUITO CREEK JOINT POWERS AUTHORITY
ACCEPTED BY DISTRICT
PROJECT ENGINEER DATE

PROJECT NAME AND SHEET DESCRIPTION:
SAN FRANCISQUITO CREEK FLOOD REDUCTION, ECOSYSTEM RESTORATION, & RECREATION PROJECT
PLAN – HAMMERHEAD TURNAROUND

SCALE: 1" = 10'
VERIFY SCALES: 0 1"
BAR IS ONE INCH ON ORIGINAL DRAWING IF NOT ONE INCH ON THIS SHEET, ADJUST SCALES ACCORDINGLY

PROJECT NUMBER: 26284002
SHEET CODE: C-23
SHEET NUMBER: 37 OF 119

DOCUMENT NUMBER: SFC_LP-C-1028-XXXXXX

USERNAME: BillShad Tue 08 Jul 2008 09:32am
FILENAME: C:\pwworking\sac\d0171341\C-23

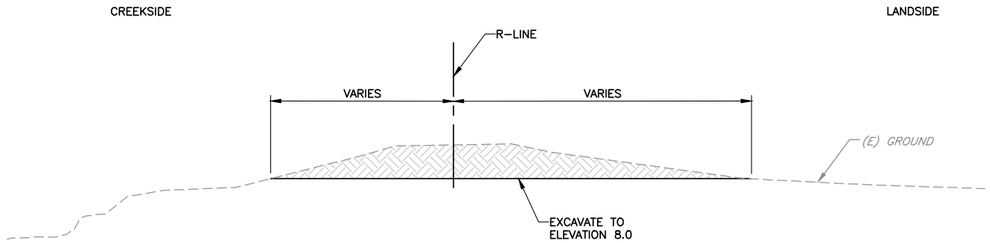

SECTION A/C-1 TYPICAL LEVEE DEGRADE SECTION – RIGHT LEVEE
NTS (R-LINE) STA 3+50 TO STA 9+50

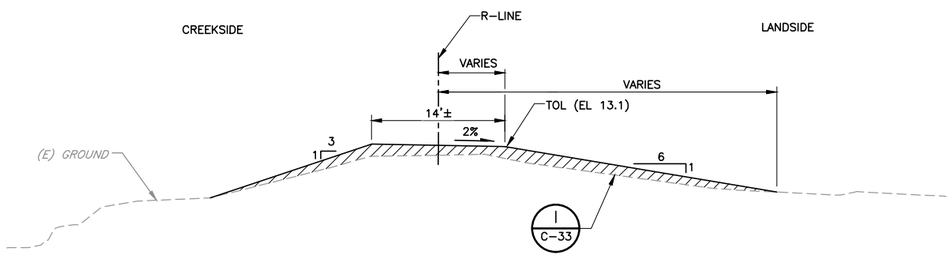

SECTION B/C-3 TYPICAL LEVEE REINFORCEMENT SECTION – RIGHT LEVEE
NTS (R-LINE) STA 21+00 TO STA 24+50

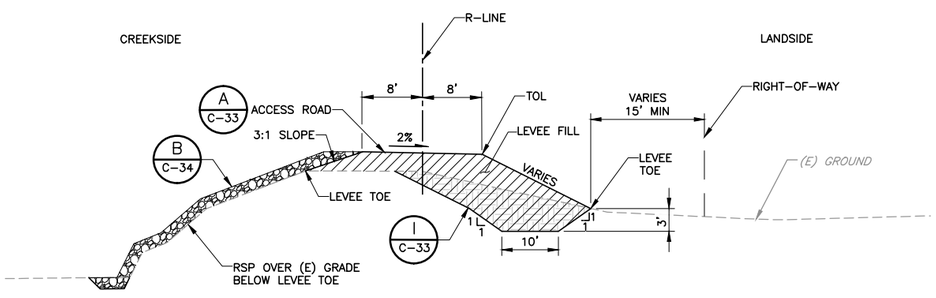

SECTION C/C-4 TYPICAL LEVEE RAISE SECTION – RIGHT LEVEE
NTS (R-LINE) STA 24+50 TO 28+03

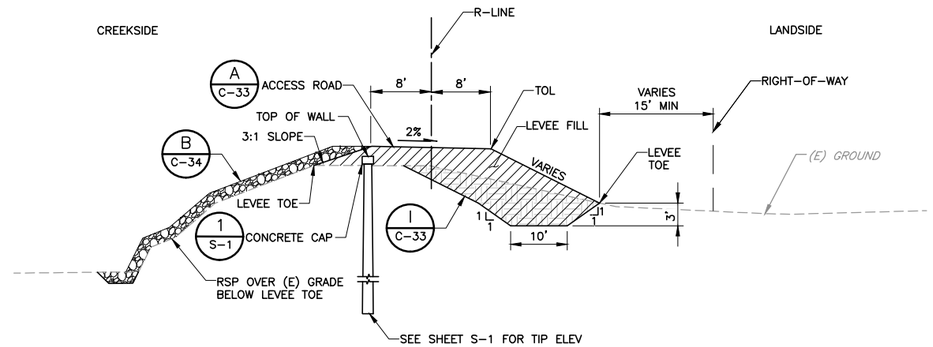

SECTION D/C-4 TYPICAL LEVEE RAISE SECTION – RIGHT LEVEE
NTS (R-LINE) STA 28+03 TO 29+54

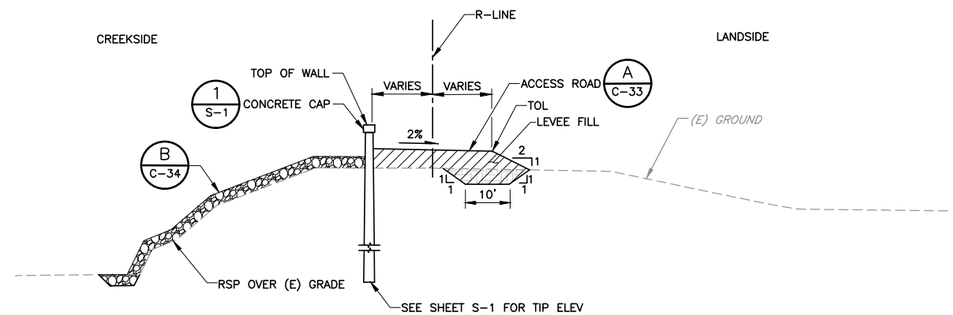

SECTION E/C-4 TYPICAL SHEET PILE FLOODWALL SECTION – RIGHT LEVEE
NTS (R-LINE) STA 29+54 TO 29+98
(R-LINE) STA 31+04 TO 31+58

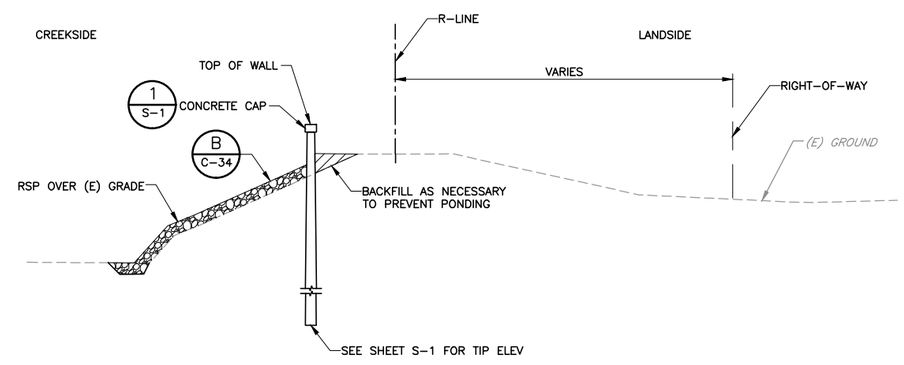

SECTION F/C-4 TYPICAL SHEET PILE FLOODWALL SECTION – RIGHT LEVEE
NTS (R-LINE) STA 30+39 TO STA 31+04

LEGEND:

- ROCK SLOPE PROTECTION
- LIMITS OF NEW LEVEE FIILL
- LIMITS OF EXCAVATION OF EXISTING LEVEE

NOTES:

1. IF SUITABLE, EXCAVATED MATERIAL SHALL BE REUSED, OR BLENDED WITH BORROW MATERIAL AND REUSED, PER SPECIFICATIONS FOR LEVEE FILL.
2. SEE PLAN AND PROFILE SHEETS FOR TOP OF LEVEE (TOL) AND LEVEE TOE ELEVATIONS.
3. ALL CROSS-SECTIONS ARE VIEWED LOOKING UPSTREAM.

REV	DESCRIPTION	DATE	APPR.
	DRAFT 100% AUGUST 2014		

HDR Engineering, Inc.

DATE: JULY 2014
DESIGN: L. JONES
DRAWN: H. SUAREZ
CHECKED: P. HRADILEK

ENGINEERING CERTIFICATION
REGISTERED PROFESSIONAL ENGINEER LANCE M. JONES C 68372 Exp. 12-30-15 CIVIL STATE OF CALIFORNIA
PRELIMINARY
PROJECT ENGINEER

SAN FRANCISQUITO CREEK JOINT POWERS AUTHORITY
ACCEPTED BY DISTRICT
PROJECT ENGINEER DATE

PROJECT NAME AND SHEET DESCRIPTION:
SAN FRANCISQUITO CREEK FLOOD REDUCTION, ECOSYSTEM RESTORATION, & RECREATION PROJECT
TYPICAL LEVEE SECTIONS
R-LINE

SCALE: NOT TO SCALE
VERIFY SCALES: 0 1"
BAR IS ONE INCH ON ORIGINAL DRAWING IF NOT ONE INCH ON THIS SHEET, ADJUST SCALES ACCORDINGLY

PROJECT NUMBER: 26284002
SHEET CODE: C-24
SHEET NUMBER: 38 OF 119

DOCUMENT NUMBER: SFC_LP-C-1028-XXXXXXX

USERNAME: BillShad Tue 08 Jul 2008 09:32am
FILENAME: C:\pwworking\sac\d0171341\C-24

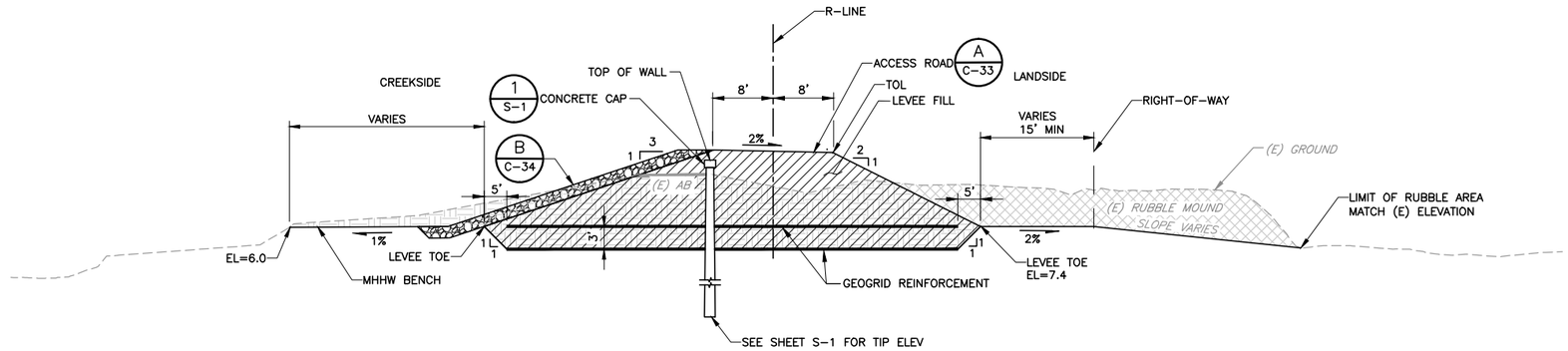

SECTION A/C-5 TYPICAL DEGRADE AND REBUILD LEVEE SECTION AT RUBBLE MOUND – RIGHT LEVEE (R-LINE) STA 31+58 TO STA 33+07

NTS

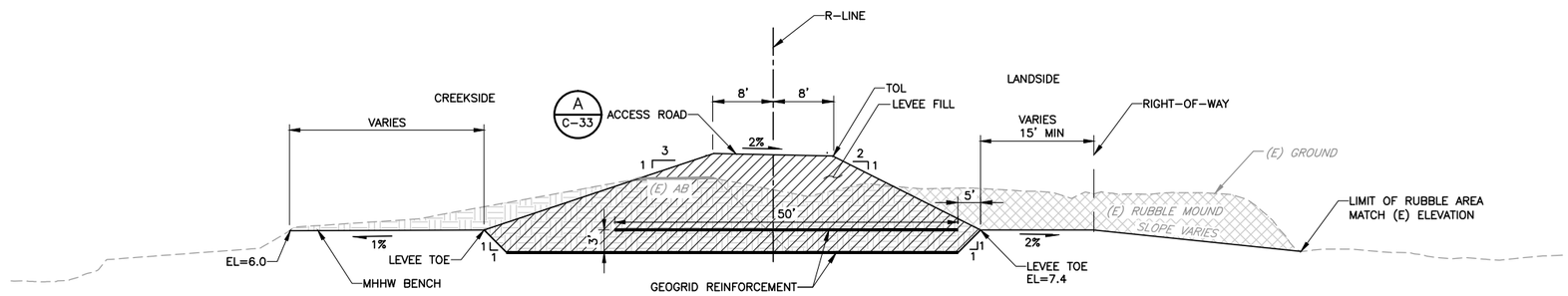

SECTION B/C-5 TYPICAL DEGRADE AND REBUILD LEVEE SECTION AT RUBBLE MOUND – RIGHT LEVEE (R-LINE) STA 33+07 TO STA 41+00

NTS

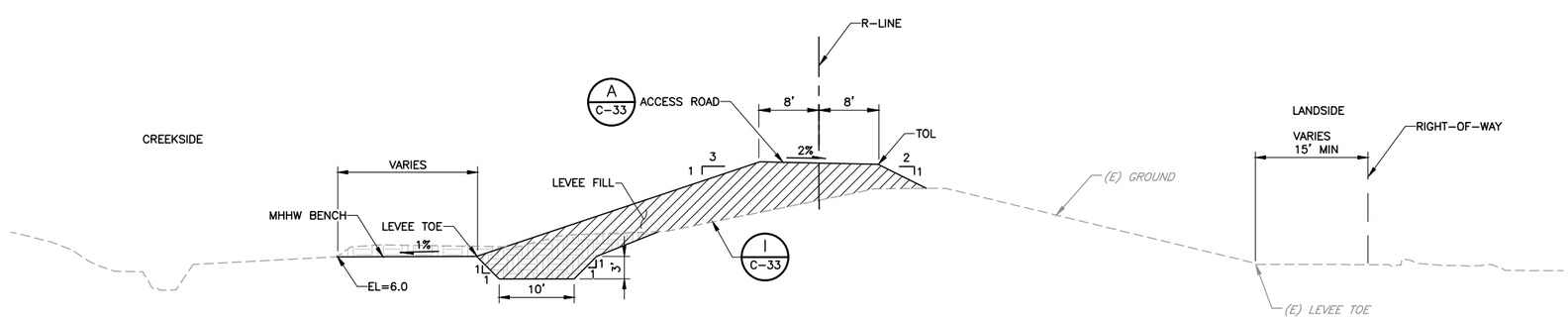

SECTION C/C-6 TYPICAL DEGRADE AND REBUILD LEVEE RAISE SECTION – RIGHT LEVEE (R-LINE) STA 41+00 TO STA 43+16

NTS

LEGEND:

- ROCK SLOPE PROTECTION
- LIMITS OF NEW LEVEE FILL
- LIMITS OF EXCAVATION OF EXISTING LEVEE
- LIMITS OF EXCAVATION OF RUBBLE MOUND

NOTES:

1. IF SUITABLE, EXCAVATED MATERIAL SHALL BE REUSED, OR BLENDED WITH BORROW MATERIAL AND REUSED, PER SPECIFICATIONS FOR LEVEE FILL.
2. SEE PLAN AND PROFILE SHEETS FOR TOP OF LEVEE (TOL) AND LEVEE TOE ELEVATIONS.
3. EXISTING RUBBLE AT LANDSIDE OF LEVEE SHALL BE REMOVED OFF SITE TO AN APPROPRIATE LANDFILL PER CONTRACT SPECIFICATIONS. CONTRACTOR TO VERIFY EXTENTS OF RUBBLE IN FIELD.
4. FOR STA 29+98 TO STA 30+39 SEE SHEET S-5.
5. ALL CROSS-SECTIONS ARE VIEWED LOOKING UPSTREAM.

REV	DESCRIPTION	DATE	APPR.
	DRAFT 100% AUGUST 2014		

HDR Engineering, Inc.

DATE: JULY 2014
DESIGN: L. JONES
DRAWN: H. SUAREZ
CHECKED: P. HRADILEK

ENGINEERING CERTIFICATION: REGISTERED PROFESSIONAL ENGINEER LANCE M. JONES 66342 Exp. 06-30-15 CIVIL STATE OF CALIFORNIA — PRELIMINARY
PROJECT ENGINEER

SAN FRANCISQUITO CREEK JOINT POWERS AUTHORITY

ACCEPTED BY DISTRICT
PROJECT ENGINEER DATE

PROJECT NAME AND SHEET DESCRIPTION:
SAN FRANCISQUITO CREEK FLOOD REDUCTION, ECOSYSTEM RESTORATION, & RECREATION PROJECT
TYPICAL LEVEE SECTIONS
R-LINE

SCALE: NOT TO SCALE
VERIFY SCALES: 0 1" BAR IS ONE INCH ON ORIGINAL DRAWING IF NOT ONE INCH ON THIS SHEET, ADJUST SCALES ACCORDINGLY

PROJECT NUMBER: 26284002
SHEET CODE: C-25
SHEET NUMBER: 39 OF 119

DOCUMENT NUMBER: SFC_LP-C-1028-XXXXXXX

USERNAME: BillShad Tue 08 Jul 2008 09:32am
FILENAME: C:\pwworking\sac\d0171341\C-25

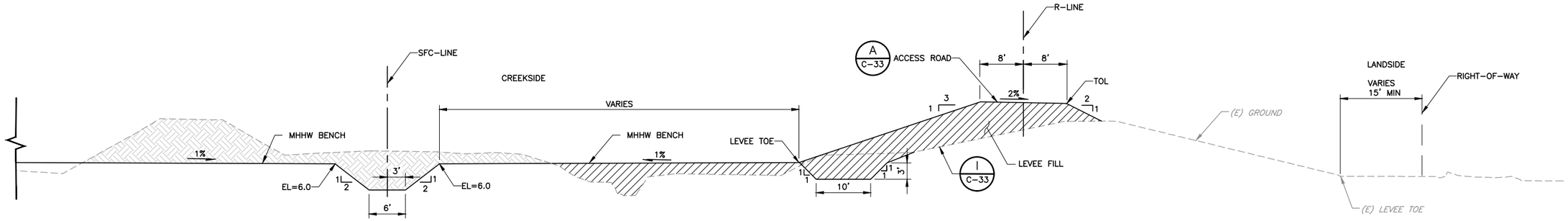

SECTION A C-6 TYPICAL DEGRADE AND REBUILD LEVEE RAISE SECTION – RIGHT LEVEE
NTS
(R-LINE) STA 43+16 TO STA 44+80

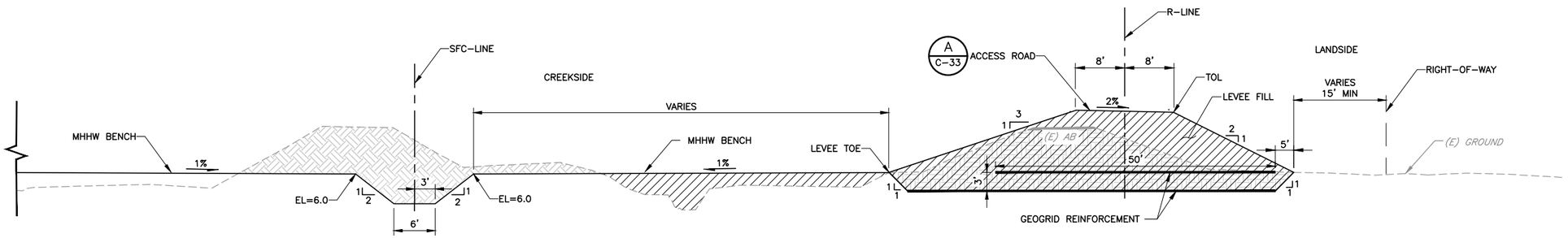

SECTION B C-6 TYPICAL DEGRADE AND REBUILD LEVEE RAISE SECTION – RIGHT LEVEE
NTS
(R-LINE) STA 44+80 TO STA 52+50

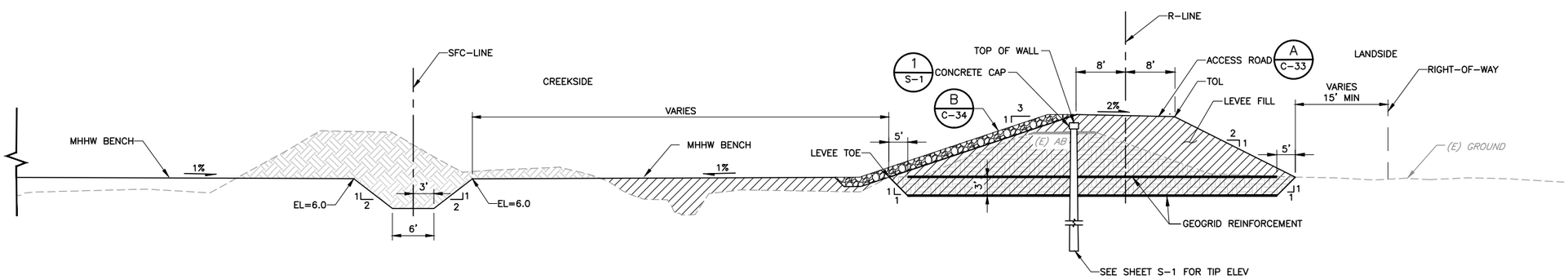

SECTION C C-7 TYPICAL DEGRADE AND REBUILD LEVEE RAISE SECTION – RIGHT LEVEE
NTS
(R-LINE) STA 52+50 TO STA 54+00

LEGEND:

- ROCK SLOPE PROTECTION
- LIMITS OF NEW LEVEE FILL
- LIMITS OF EXCAVATION OF EXISTING LEVEE

NOTES:

1. IF SUITABLE, EXCAVATED MATERIAL SHALL BE REUSED, OR BLENDED WITH BORROW MATERIAL AND REUSED, PER SPECIFICATIONS FOR LEVEE FILL.
2. SEE PLAN AND PROFILE SHEETS FOR TOP OF LEVEE (TOL) AND LEVEE TOE ELEVATIONS.
3. EXISTING RUBBLE AT LANDSIDE OF LEVEE SHALL BE REMOVED OFF SITE TO AN APPROPRIATE LANDFILL PER CONTRACT SPECIFICATIONS. CONTRACTOR TO VERIFY EXTENTS OF RUBBLE IN FIELD.
4. ALL CROSS-SECTIONS ARE VIEWED LOOKING UPSTREAM.

REV	DESCRIPTION	DATE	APPR.
	DRAFT 100% AUGUST 2014		

HDR Engineering, Inc.

DATE: JULY 2014
DESIGN: L. JONES
DRAWN: H. SUAREZ
CHECKED: P. HRADILEK

ENGINEERING CERTIFICATION: REGISTERED PROFESSIONAL ENGINEER LANCE M. JONES 68374 EXP. 09-30-15 CIVIL STATE OF CALIFORNIA — PRELIMINARY
PROJECT ENGINEER

SAN FRANCISQUITO CREEK JOINT POWERS AUTHORITY
ACCEPTED BY DISTRICT
PROJECT ENGINEER DATE

PROJECT NAME AND SHEET DESCRIPTION:
SAN FRANCISQUITO CREEK FLOOD REDUCTION, ECOSYSTEM RESTORATION, & RECREATION PROJECT
TYPICAL LEVEE SECTIONS
R-LINE

SCALE: NOT TO SCALE
VERIFY SCALES: 0 1"
BAR IS ONE INCH ON ORIGINAL DRAWING IF NOT ONE INCH ON THIS SHEET, ADJUST SCALES ACCORDINGLY

PROJECT NUMBER: 26284002
SHEET CODE: C-26
SHEET NUMBER: 40 OF 119

USERNAME: BillShad Tue 08 Jul 2008 09:32am
FILENAME: C:\pwworking\sac\d0171341\C-26
DOCUMENT NUMBER:SFC_LP-C-1028-XXXXXXX

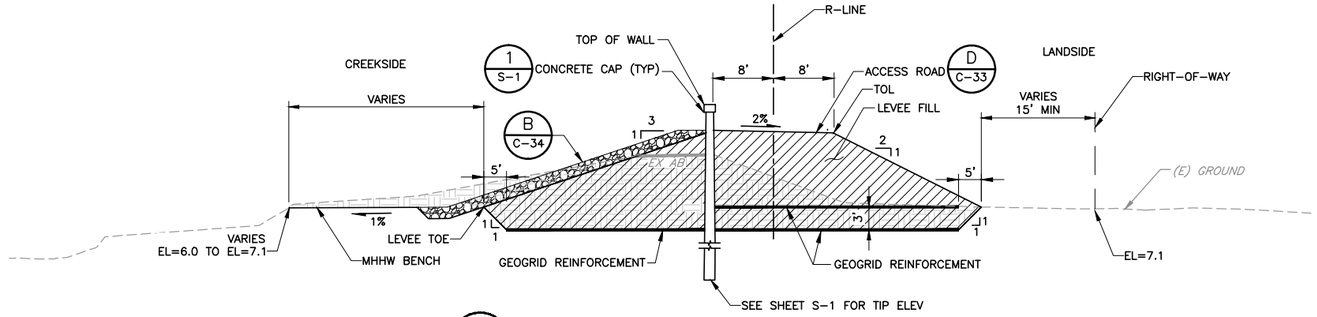

SECTION A C-7 TYPICAL LEVEE TRANSITION SECTION – RIGHT LEVEE (R-LINE) STA 54+00 TO STA 55+00

NTS

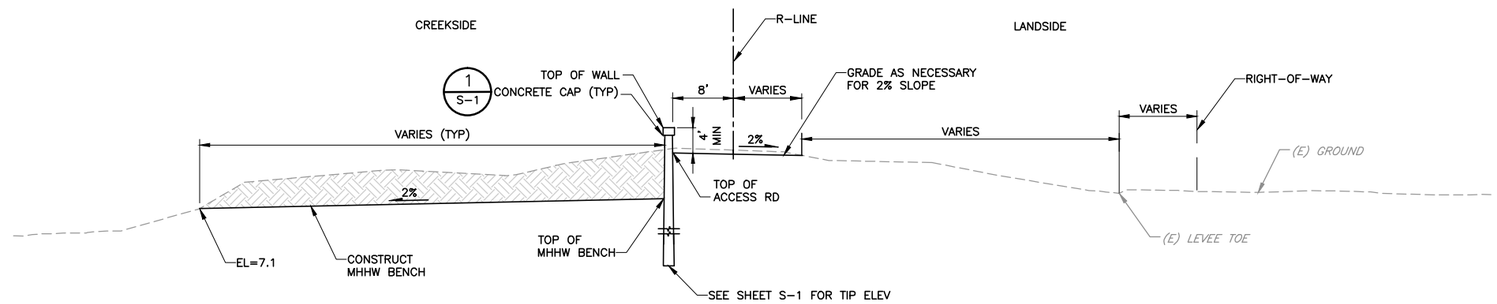

SECTION B C-7 TYPICAL SHEET PILE FLOODWALL SECTION – RIGHT LEVEE (R-LINE) STA 55+00 TO STA 58+08

NTS

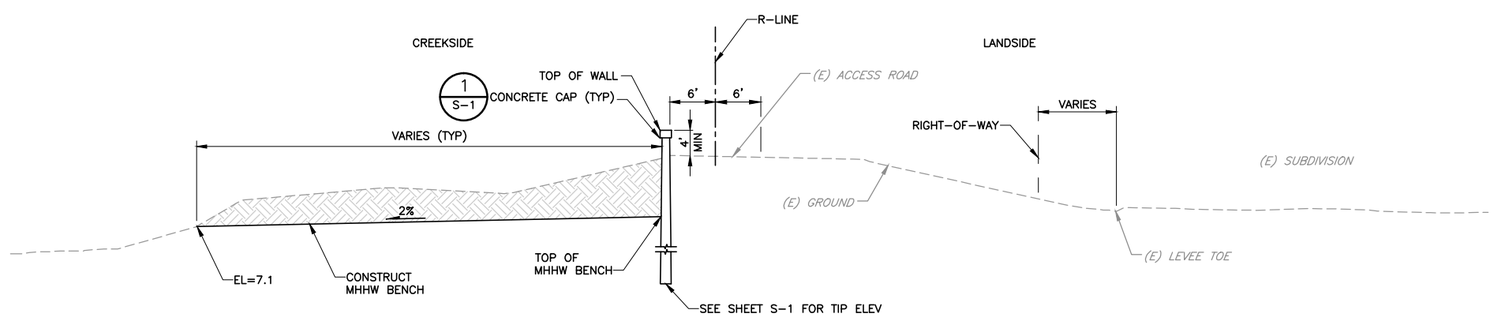

SECTION C C-8 TYPICAL SHEET PILE FLOODWALL SECTION – RIGHT LEVEE (R-LINE) STA 58+08 TO STA 68+80

NTS

LEGEND:

- ROCK SLOPE PROTECTION
- LIMITS OF NEW LEVEE FIILL
- LIMITS OF EXCAVATION OF EXISTING LEVEE
- LIMITS OF NEW ACCESS ROAD FILL

NOTES:

1. IF SUITABLE, EXCAVATED MATERIAL SHALL BE REUSED, OR BLENDED WITH BORROW MATERIAL AND REUSED, PER SPECIFICATIONS FOR LEVEE FILL.
2. SEE PLAN AND PROFILE SHEETS FOR TOP OF WALL, TOP OF ACCESS ROAD, AND TOP OF MHHW BENCH ELEVATIONS.
3. EXCAVATE BENCH AFTER SHEET PILE FLOODWALL INSTALLATION IS COMPLETE.
4. ALL CROSS-SECTIONS ARE VIEWED LOOKING UPSTREAM.

REV	DESCRIPTION	DATE	APPR.
	DRAFT 100% AUGUST 2014		

HDR Engineering, Inc.

DATE: JULY 2014
DESIGN: L. JONES
DRAWN: H. SUAREZ
CHECKED: P. HRADILEK

ENGINEERING CERTIFICATION: REGISTERED PROFESSIONAL ENGINEER LANCE M. JONES 68374 EXP. 09-30-15 CIVIL STATE OF CALIFORNIA — PRELIMINARY
PROJECT ENGINEER

SAN FRANCISQUITO CREEK JOINT POWERS AUTHORITY

ACCEPTED BY DISTRICT
PROJECT ENGINEER DATE

PROJECT NAME AND SHEET DESCRIPTION:
SAN FRANCISQUITO CREEK FLOOD REDUCTION, ECOSYSTEM RESTORATION, & RECREATION PROJECT
TYPICAL LEVEE SECTIONS
R-LINE

SCALE: NOT TO SCALE
VERIFY SCALES: 0 1"
BAR IS ONE INCH ON ORIGINAL DRAWING IF NOT ONE INCH ON THIS SHEET, ADJUST SCALES ACCORDINGLY

PROJECT NUMBER: 26284002
SHEET CODE: C-27
SHEET NUMBER: 41 OF 119

DOCUMENT NUMBER: SFC_LP-C-1028-XXXXXXX

USERNAME: BillShad Tue 08 Jul 2008 09:32am
FILENAME: C:\pwworking\sac\d0171341\C-27

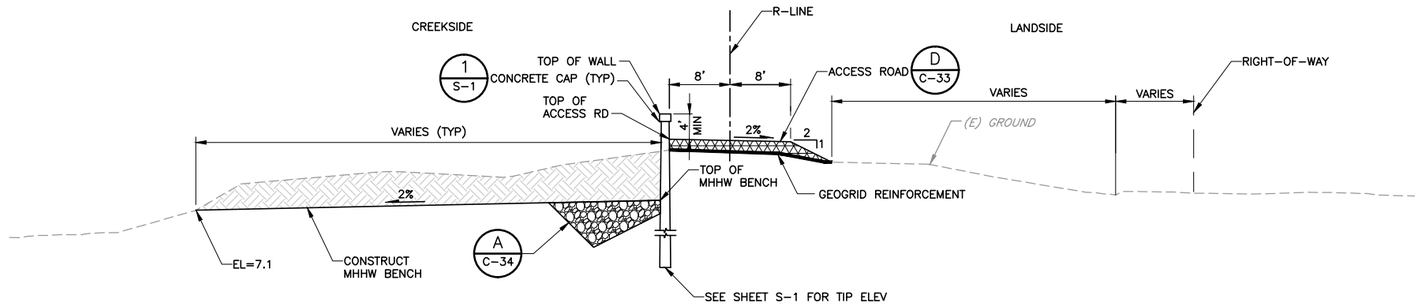

SECTION A C-9 TYPICAL SHEET PILE FLOODWALL SECTION – RIGHT LEVEE
NTS (R-LINE) STA 68+80 TO STA 75+54

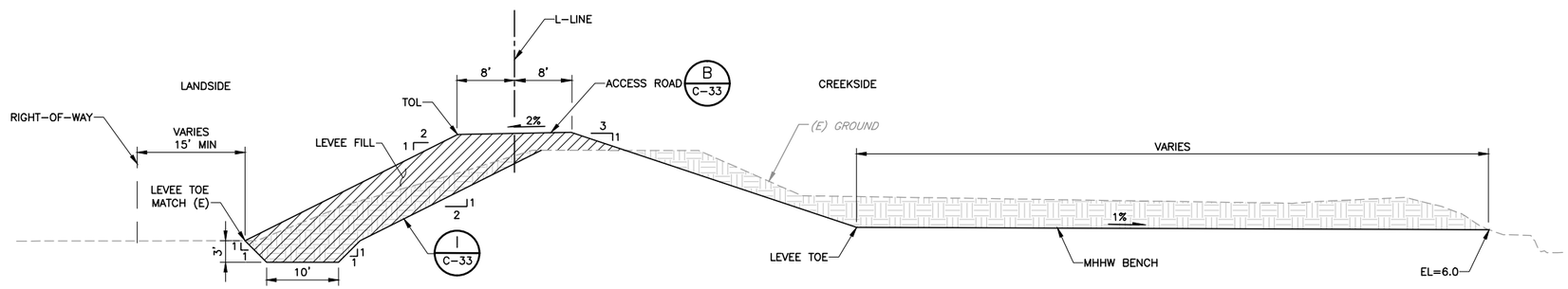

SECTION B C-12 TYPICAL NEW LEVEE SECTION – LEFT LEVEE
NTS (L-LINE) STA 22+73 TO STA 25+50

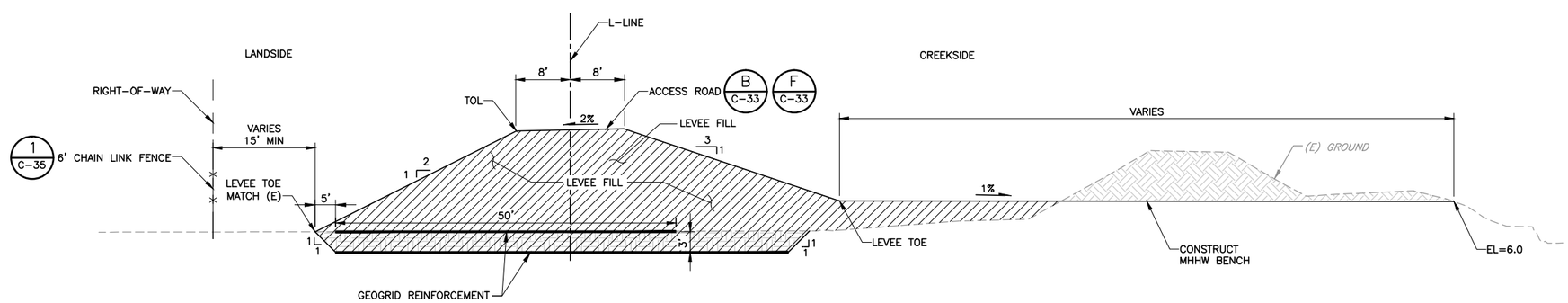

SECTION C C-12 TYPICAL NEW LEVEE SECTION – LEFT LEVEE
NTS (L-LINE) STA 25+50 TO STA 26+50
(L-LINE) STA 29+50 TO STA 39+77

LEGEND:

- ROCK SLOPE PROTECTION
- LIMITS OF NEW LEVEE FIILL
- LIMITS OF EXCAVATION OF EXISTING LEVEE
- LIMITS OF NEW ACCESS ROAD FILL

NOTES:

1. IF SUITABLE, EXCAVATED MATERIAL SHALL BE REUSED, OR BLENDED WITH BORROW MATERIAL AND REUSED, PER SPECIFICATIONS FOR LEVEE FILL.
2. SEE PLAN AND PROFILE SHEETS FOR TOP OF LEVEE (TOL), LEVEE TOE, TOP OF WALL, TOP OF ACCESS ROAD, AND TOP OF MHHW BENCH ELEVATIONS.
3. ALL CROSS-SECTIONS ARE VIEWED LOOKING UPSTREAM.

REV	DESCRIPTION	DATE	APPR.
	DRAFT 100% AUGUST 2014		

HDR Engineering, Inc.

DATE: JULY 2014
DESIGN: L. JONES
DRAWN: H. SUAREZ
CHECKED: P. HRADILEK

ENGINEERING CERTIFICATION
REGISTERED PROFESSIONAL ENGINEER LANCE M. JONES 68074 Exp. 6-30-15 CIVIL STATE OF CALIFORNIA
PRELIMINARY
PROJECT ENGINEER

SAN FRANCISQUITO CREEK JOINT POWERS AUTHORITY
ACCEPTED BY DISTRICT
PROJECT ENGINEER DATE

PROJECT NAME AND SHEET DESCRIPTION:
SAN FRANCISQUITO CREEK FLOOD REDUCTION, ECOSYSTEM RESTORATION, & RECREATION PROJECT
TYPICAL LEVEE SECTIONS
L-LINE

SCALE: NOT TO SCALE
VERIFY SCALES: 0 1"
BAR IS ONE INCH ON ORIGINAL DRAWING IF NOT ONE INCH ON THIS SHEET, ADJUST SCALES ACCORDINGLY

PROJECT NUMBER: 26284002
SHEET CODE: C-28
SHEET NUMBER: 42 OF 119

DOCUMENT NUMBER: SFC_LP-C-1028-XXXXXXX

USERNAME: BillShad Tue 08 Jul 2008 09:32am
FILENAME: C:\pwworking\sac\d0171341\C-28

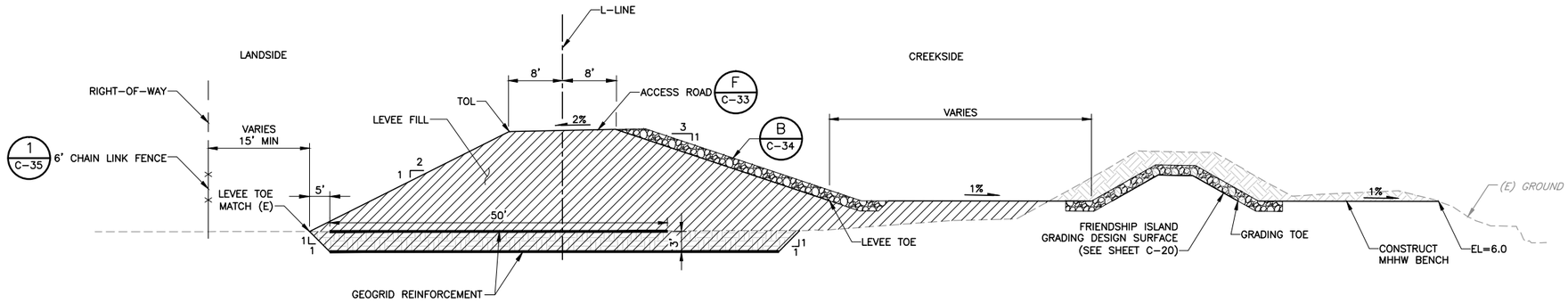

SECTION A C-12 NTS TYPICAL NEW LEVEE SECTION – LEFT LEVEE
(L-LINE) STA 26+50 TO STA 29+50

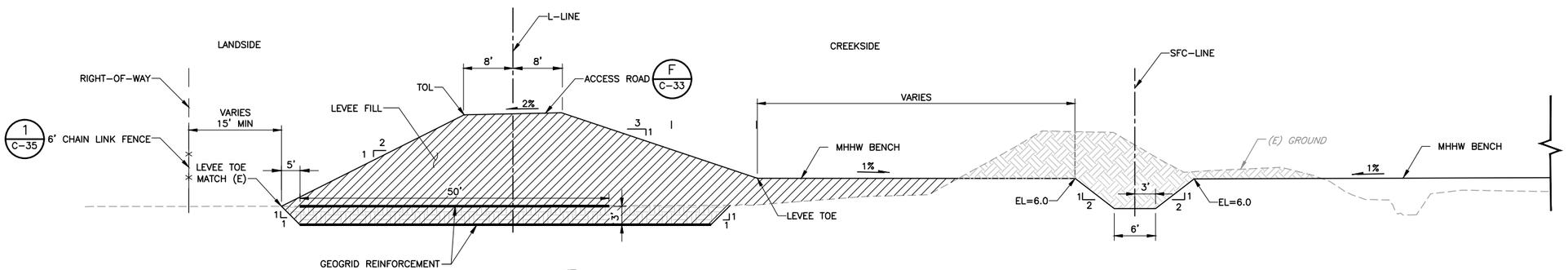

SECTION B C-14 NTS TYPICAL NEW LEVEE SECTION – LEFT LEVEE
(L-LINE) STA 39+77 TO STA 46+75

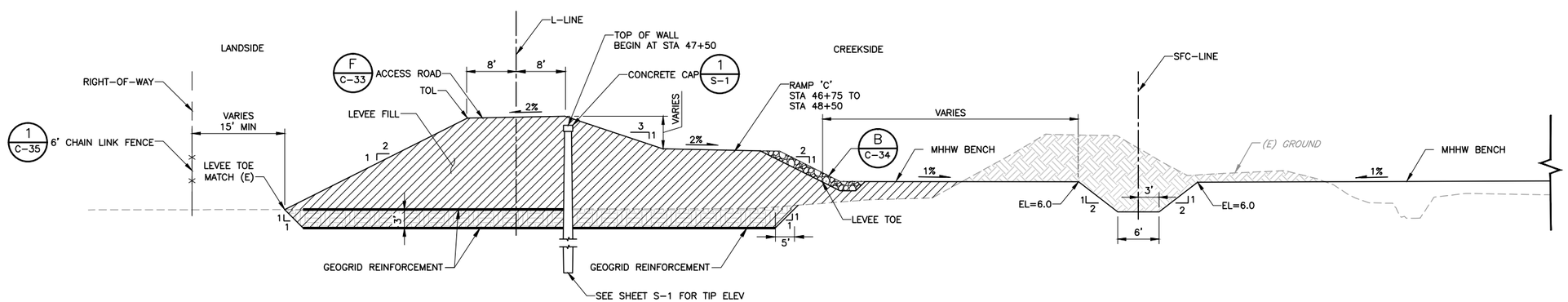

SECTION C C-14 NTS TYPICAL NEW LEVEE SECTION – LEFT LEVEE
(L-LINE) STA 46+75 TO STA 49+00

LEGEND:

- ROCK SLOPE PROTECTION
- LIMITS OF NEW LEVEE FIILL
- LIMITS OF EXCAVATION OF EXISTING LEVEE
- LIMITS OF NEW ACCESS ROAD FILL

NOTES:

1. IF SUITABLE, EXCAVATED MATERIAL SHALL BE REUSED, OR BLENDED WITH BORROW MATERIAL AND REUSED, PER SPECIFICATIONS FOR LEVEE FILL.
2. SEE PLAN AND PROFILE SHEETS FOR TOP OF LEVEE (TOL), LEVEE TOE, TOP OF WALL, TOP OF ACCESS ROAD, AND TOP OF MHHW BENCH ELEVATIONS.
3. ALL CROSS-SECTIONS ARE VIEWED LOOKING UPSTREAM.

REV	DESCRIPTION	DATE	APPR.
	DRAFT 100% AUGUST 2014		

HDR Engineering, Inc.

DATE: JULY 2014
DESIGN: L. JONES
DRAWN: H. SUAREZ
CHECKED: P. HRADILEK

ENGINEERING CERTIFICATION
REGISTERED PROFESSIONAL ENGINEER LANCE M. JONES 68374 Exp. 09-30-15 CIVIL STATE OF CALIFORNIA
PRELIMINARY
PROJECT ENGINEER

SAN FRANCISQUITO CREEK JOINT POWERS AUTHORITY
ACCEPTED BY DISTRICT
PROJECT ENGINEER DATE

PROJECT NAME AND SHEET DESCRIPTION:
SAN FRANCISQUITO CREEK FLOOD REDUCTION, ECOSYSTEM RESTORATION, & RECREATION PROJECT
TYPICAL LEVEE SECTIONS
L-LINE

SCALE: NOT TO SCALE
VERIFY SCALES: 0 1"
BAR IS ONE INCH ON ORIGINAL DRAWING IF NOT ONE INCH ON THIS SHEET, ADJUST SCALES ACCORDINGLY

PROJECT NUMBER: 26284002
SHEET CODE: C-29
SHEET NUMBER: 43 OF 119

DOCUMENT NUMBER: SFC_LP-C-1028-XXXXXXX

USERNAME: BillShad Tue 08 Jul 2008 09:32am
FILENAME: C:\pwworking\sac\d0171341\C-29

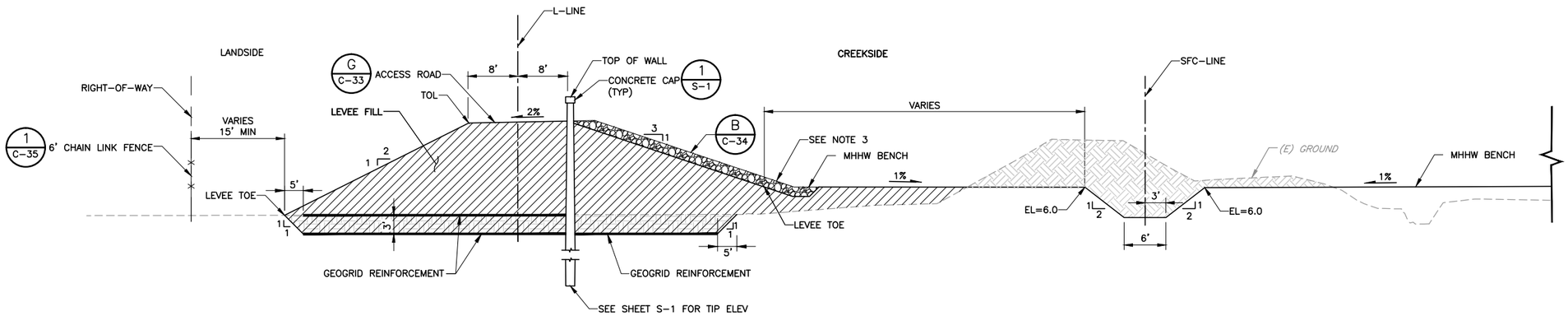

SECTION A C-15 NTS TYPICAL LEVEE TO ACCESS ROAD TRANSITION SECTION – LEFT LEVEE
(L-LINE) STA 49+00 TO STA 50+00

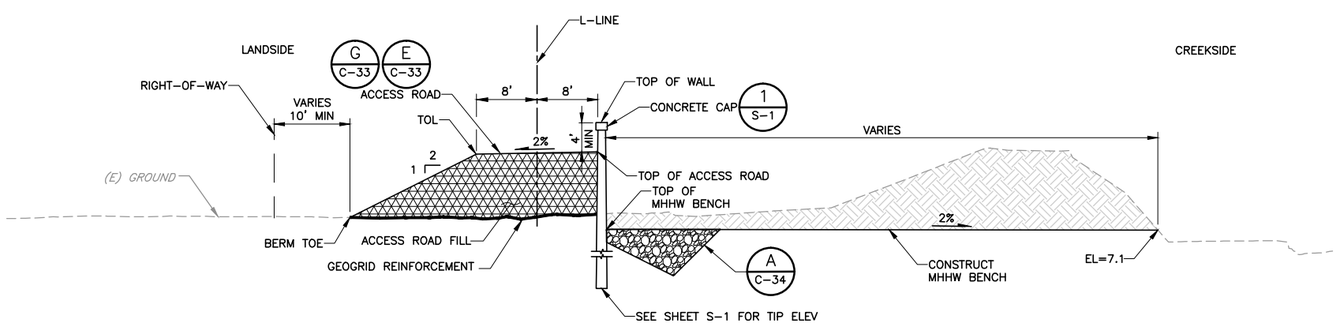

SECTION B C-15 NTS TYPICAL SHEET PILE FLOODWALL SECTION – LEFT LEVEE
(L-LINE) STA 50+00 TO STA 58+50

LEGEND:

- ROCK SLOPE PROTECTION
- LIMITS OF NEW LEVEE FIILL
- LIMITS OF EXCAVATION OF EXISTING LEVEE
- LIMITS OF NEW ACCESS ROAD FILL

NOTES:

1. IF SUITABLE, EXCAVATED MATERIAL SHALL BE REUSED, OR BLENDED WITH BORROW MATERIAL AND REUSED, PER SPECIFICATIONS FOR LEVEE FILL.
2. SEE PLAN AND PROFILE SHEETS FOR TOP OF LEVEE (TOL), LEVEE TOE, TOP OF WALL, TOP OF ACCESS ROAD, AND TOP OF MHHW BENCH ELEVATIONS.
3. ALL CROSS-SECTIONS ARE VIEWED LOOKING UPSTREAM.

REV	DESCRIPTION	DATE	APPR.
	DRAFT 100% AUGUST 2014		

HDR Engineering, Inc.

DATE: JULY 2014
DESIGN: L. JONES
DRAWN: H. SUAREZ
CHECKED: P. HRADILEK

ENGINEERING CERTIFICATION: REGISTERED PROFESSIONAL ENGINEER LANCE M. JONES 88374 Exp. 9-30-15 CIVIL STATE OF CALIFORNIA — PRELIMINARY
PROJECT ENGINEER

SAN FRANCISQUITO CREEK JOINT POWERS AUTHORITY
ACCEPTED BY DISTRICT
PROJECT ENGINEER DATE

PROJECT NAME AND SHEET DESCRIPTION:
SAN FRANCISQUITO CREEK FLOOD REDUCTION, ECOSYSTEM RESTORATION, & RECREATION PROJECT
TYPICAL LEVEE SECTIONS
L-LINE

SCALE: NOT TO SCALE
VERIFY SCALES: 0 1"
BAR IS ONE INCH ON ORIGINAL DRAWING IF NOT ONE INCH ON THIS SHEET, ADJUST SCALES ACCORDINGLY

PROJECT NUMBER: 26284002
SHEET CODE: C-30
SHEET NUMBER: 44 OF 119

DOCUMENT NUMBER: SFC_LP-C-1028-XXXXXXX

USERNAME: BillShad Tue 08 Jul 2008 09:32am
FILENAME: C:\pwworking\sac\d0171341\C-30

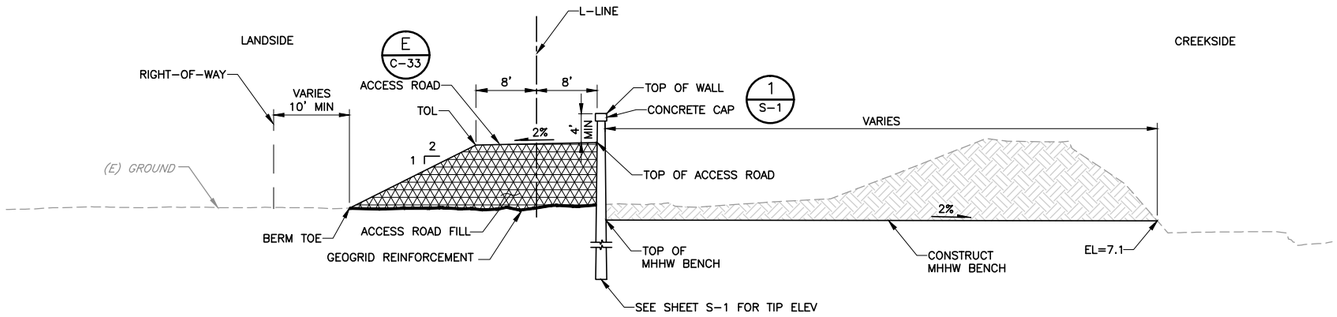

SECTION A C-16 NTS TYPICAL SHEET PILE FLOODWALL SECTION – LEFT LEVEE
(L-LINE) STA 58+50 TO STA 62+88

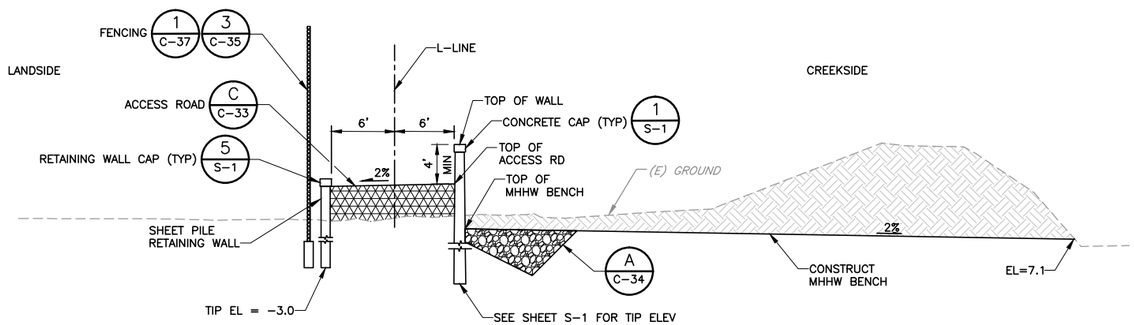

SECTION B C-16 NTS TYPICAL FLOODWALL SECTION – LEFT LEVEE
(L-LINE) STA 62+88 TO STA 67+93

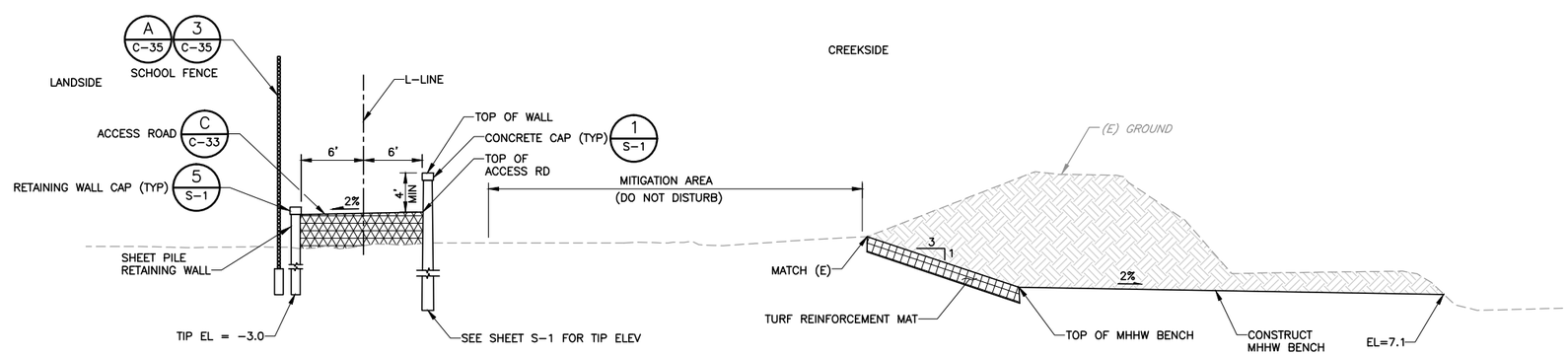

SECTION C C-17 NTS TYPICAL FLOODWALL SECTION – LEFT LEVEE
(L-LINE) STA 67+93 TO STA 69+95

LEGEND:

- ROCK SLOPE PROTECTION
- LIMITS OF NEW ACCESS ROAD FILL
- LIMITS OF EXCAVATION OF EXISTING LEVEE
- TURF REINFORCEMENT MAT

NOTES:

1. IF SUITABLE, EXCAVATED MATERIAL SHALL BE REUSED, OR BLENDED WITH BORROW MATERIAL AND REUSED, PER SPECIFICATIONS FOR LEVEE FILL.
2. SEE PLAN AND PROFILE SHEETS TOP OF WALL, TOP OF ACCESS ROAD, AND TOP OF MHHW BENCH ELEVATIONS.
3. ALL CROSS-SECTIONS ARE VIEWED LOOKING UPSTREAM.

REV	DESCRIPTION	DATE	APPR.
	DRAFT 100% AUGUST 2014		

HDR Engineering, Inc.

DATE: JULY 2014
DESIGN: L. JONES
DRAWN: H. SUAREZ
CHECKED: P. HRADILEK

ENGINEERING CERTIFICATION: REGISTERED PROFESSIONAL ENGINEER LANCE M. JONES 68342 Exp. 06-30-15 CIVIL STATE OF CALIFORNIA — PRELIMINARY
PROJECT ENGINEER

SAN FRANCISQUITO CREEK JOINT POWERS AUTHORITY
ACCEPTED BY DISTRICT
PROJECT ENGINEER DATE

PROJECT NAME AND SHEET DESCRIPTION:
SAN FRANCISQUITO CREEK FLOOD REDUCTION, ECOSYSTEM RESTORATION, & RECREATION PROJECT
TYPICAL LEVEE SECTIONS
L-LINE

SCALE: NOT TO SCALE
VERIFY SCALES: 0 1" BAR IS ONE INCH ON ORIGINAL DRAWING IF NOT ONE INCH ON THIS SHEET, ADJUST SCALES ACCORDINGLY

PROJECT NUMBER: 26284002
SHEET CODE: C-31
SHEET NUMBER: 45 OF 119

DOCUMENT NUMBER: SFC_LP-C-1028-XXXXXXX

USERNAME: BillShad Tue 08 Jul 2008 09:32am
FILENAME: C:\pwworking\sac\d0171341\C-31

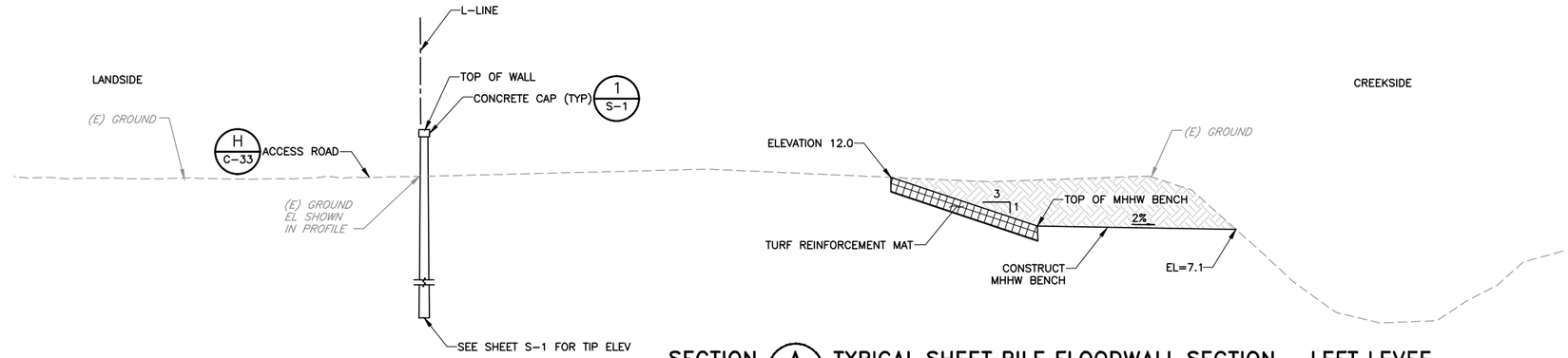

SECTION A C-17 TYPICAL SHEET PILE FLOODWALL SECTION – LEFT LEVEE

NTS

(L-LINE) STA 69+95 TO STA 70+62
(L-LINE) STA 70+78 TO STA 71+05
(L-LINE) STA 71+57 TO STA 71+90

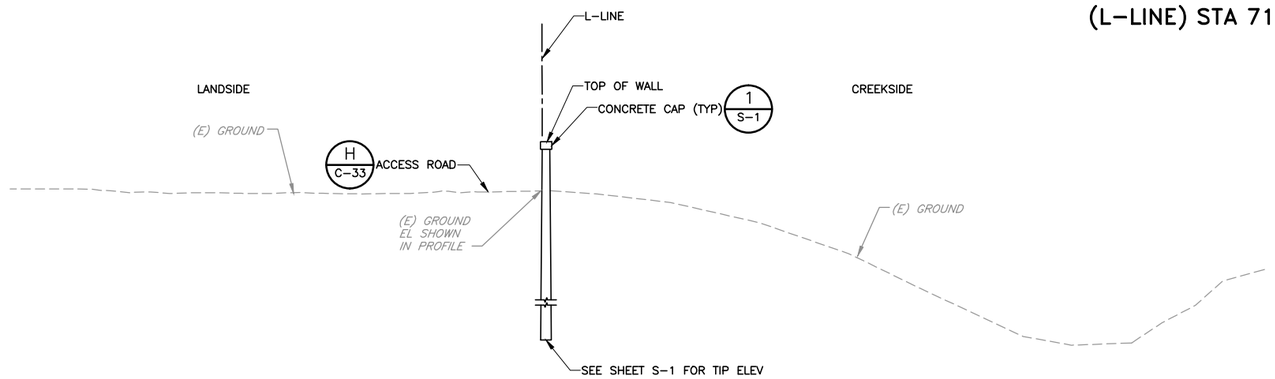

SECTION B C-17 TYPICAL SHEET PILE FLOODWALL SECTION – LEFT LEVEE

NTS

(L-LINE) STA 71+90 TO STA 73+86

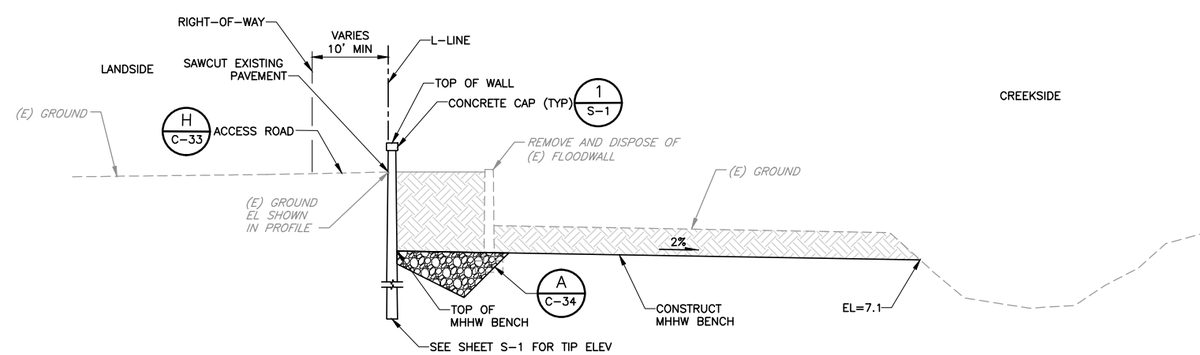

SECTION C C-17 TYPICAL SHEET PILE FLOODWALL SECTION – LEFT LEVEE

NTS

(L-LINE) STA 73+86 TO STA 76+19

LEGEND:

- ROCK SLOPE PROTECTION
- LIMITS OF EXCAVATION OF EXISTING LEVEE
- TURF REINFORCEMENT MAT

NOTES:

1. IF SUITABLE, EXCAVATED MATERIAL SHALL BE REUSED, OR BLENDED WITH BORROW MATERIAL AND REUSED, PER SPECIFICATIONS FOR LEVEE FILL.
2. SEE PLAN AND PROFILE SHEETS FOR TOP OF WALL AND TOP OF MHHW BENCH ELEVATIONS.
3. ALL CROSS-SECTIONS ARE VIEWED LOOKING UPSTREAM.
4. FOR STA 70+62 TO STA 70+78 SEE SHEET C-38.

REV	DESCRIPTION	DATE	APPR.
	DRAFT 100% AUGUST 2014		

HDR Engineering, Inc.

DATE	JULY 2014
DESIGN	L. JONES
DRAWN	H. SUAREZ
CHECKED	P. HRADILEK

ENGINEERING CERTIFICATION

NTS

REGISTERED PROFESSIONAL ENGINEER LANCE M. JONES 68374 Exp. 06-30-15 CIVIL STATE OF CALIFORNIA

PRELIMINARY

PROJECT ENGINEER

SAN FRANCISQUITO CREEK JOINT POWERS AUTHORITY

ACCEPTED BY DISTRICT

PROJECT ENGINEER DATE

PROJECT NAME AND SHEET DESCRIPTION:

SAN FRANCISQUITO CREEK FLOOD REDUCTION, ECOSYSTEM RESTORATION, & RECREATION PROJECT

TYPICAL LEVEE SECTIONS
L-LINE

SCALE: NOT TO SCALE

VERIFY SCALES: 0 1"
BAR IS ONE INCH ON ORIGINAL DRAWING IF NOT ONE INCH ON THIS SHEET, ADJUST SCALES ACCORDINGLY

PROJECT NUMBER: 26284002

SHEET CODE: C-32

SHEET NUMBER: 46 OF 119

DOCUMENT NUMBER: SFC_LP-C-1028-XXXXXXX

USERNAME: BillShad Tue 08 Jul 2008 09:32am
FILENAME: C:\pwworking\sac\d0171341\C-32

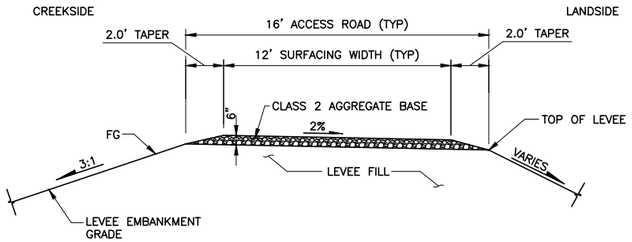

SECTION A / C-24 — TYPICAL ACCESS ROAD SURFACE
STA 24+50 TO 29+54 – (R-LINE)
STA 31+04 TO 54+00 – (R-LINE)
NTS

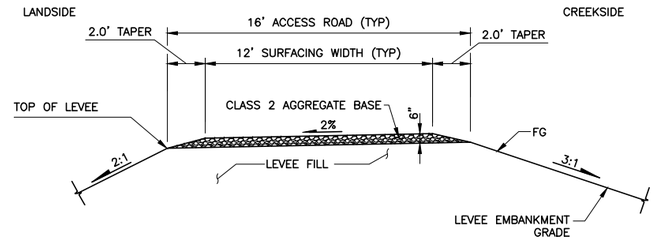

SECTION B / C-28 — TYPICAL ACCESS ROAD SURFACE
STA 22+73 TO 27+50 – (L-LINE)
NTS

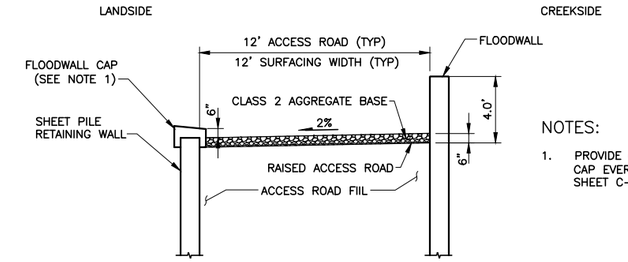

NOTES:

1. PROVIDE 6-INCH WIDE BREAK IN FLOODWALL CAP EVERY 15' AS SHOWN IN DETAIL 3 ON SHEET C-35 TO ALLOW RUNOFF TO RELEASE.

SECTION C / C-31 — TYPICAL ACCESS ROAD SURFACE
STA 62+88 TO 69+95 – (L-LINE)
NTS

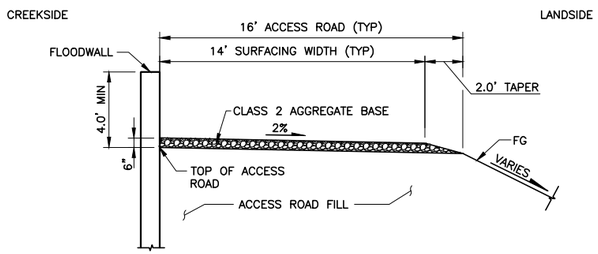

SECTION D / C-27 — TYPICAL ACCESS ROAD SURFACE
STA 29+54 TO 29+98 – (R-LINE)
STA 54+00 TO 57+88 – (R-LINE)
STA 68+80 TO 75+54 – (R-LINE)
NTS

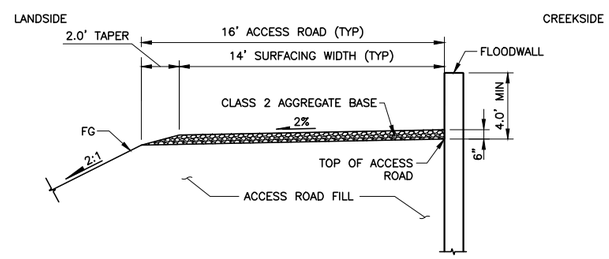

SECTION E / C-28 — TYPICAL ACCESS ROAD SURFACE
STA 54+08 TO 64+00 – (L-LINE)
NTS

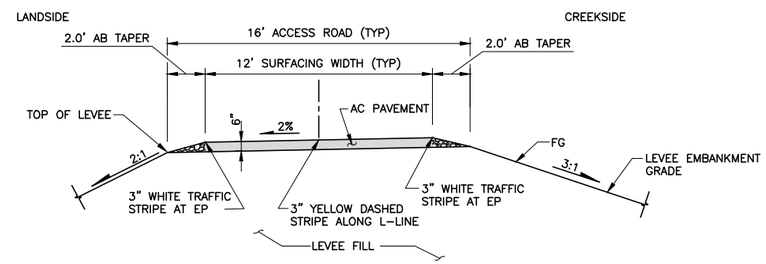

SECTION F / C-28 — TYPICAL ACCESS ROAD SURFACE
(BICYCLE PATH) – (L-LINE)
STA 27+50 TO 50+00
NTS

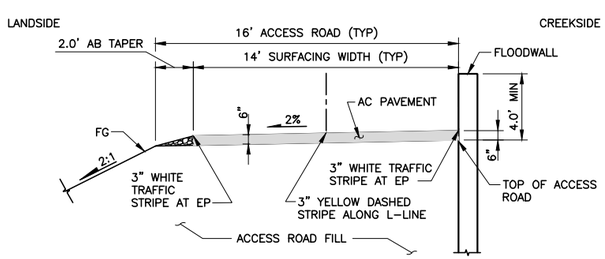

SECTION G / C-28 — TYPICAL ACCESS ROAD SURFACE
STA 50+00 TO 54+08 – (L-LINE)
NTS

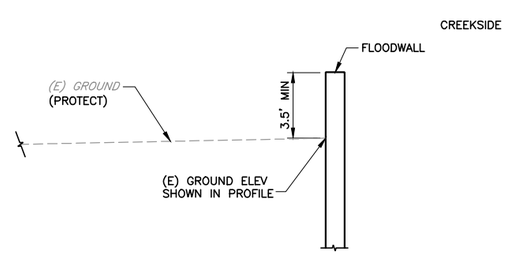

SECTION H / C-31 — TYPICAL ACCESS ROAD SURFACE
STA 69+95 TO 76+29 – (L-LINE)
NTS

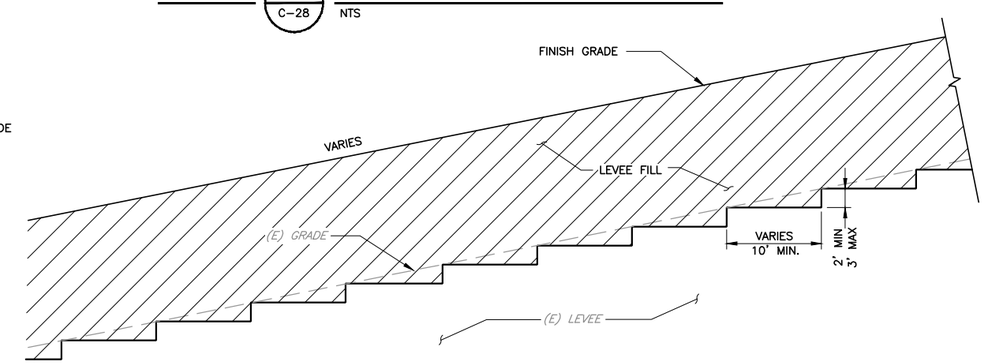

SECTION I / C-24 — SETBACK AND IN-PLACE LEVEE RAISED BENCHING DETAIL
NTS

REV	DESCRIPTION	DATE	APPR.
	DRAFT 100% AUGUST 2014		

HDR Engineering, Inc.

DATE: JULY 2014
DESIGN: S. JIMENEZ
DRAWN: H. SUAREZ
CHECKED: P. HRADILEK

ENGINEERING CERTIFICATION
REGISTERED PROFESSIONAL ENGINEER — LANCE M. JONES — 66374 — Exp. 06-30-15 — CIVIL — STATE OF CALIFORNIA
PRELIMINARY
PROJECT ENGINEER DATE

SAN FRANCISQUITO CREEK JOINT POWERS AUTHORITY
ACCEPTED BY DISTRICT
PROJECT ENGINEER DATE

PROJECT NAME AND SHEET DESCRIPTION:
SAN FRANCISQUITO CREEK FLOOD REDUCTION, ECOSYSTEM RESTORATION, & RECREATION PROJECT
TYPICAL SECTIONS

SCALE: NOT TO SCALE
VERIFY SCALES: 0 — 1"
BAR IS ONE INCH ON ORIGINAL DRAWING IF NOT ONE INCH ON THIS SHEET, ADJUST SCALES ACCORDINGLY

PROJECT NUMBER: 130806
SHEET CODE: C-33
SHEET NUMBER: 47 OF 119

DOCUMENT NUMBER: SFC_LP-C-1028-XXXXXXX
USERNAME: BillShad Tue 08 Jul 2008 09:32am
FILENAME: C:\pwworking\sac\d0171341\C-33

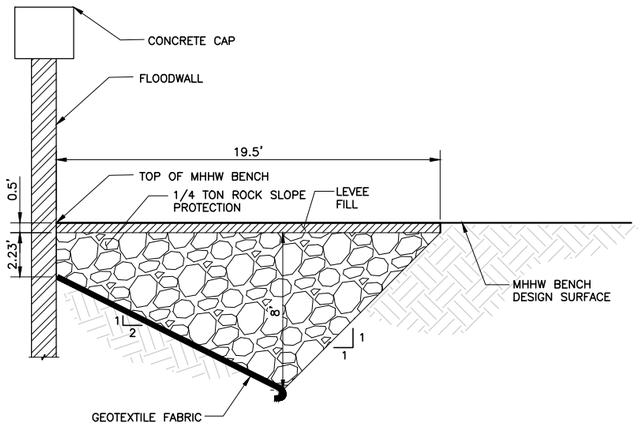

SECTION A / C-28 ROCK SLOPE PROTECTION AT FLOOD WALL

NTS

TABLE 1	
STATION RANGE	ALIGNMENT
68+80 – 75+54	R–LINE
50+00 – 58+50	L–LINE
62+88 – 67+93	L–LINE
73+74 – 76+19	L–LINE

NOTE:

IF WIDTH OF MHHW BENCH IS LESS THAN 19.5', CONSTRUCT 2:1 AND 1:1 SLOPES AS SHOWN AND MODIFY RSP DEPTH ACCORDINGLY.

TABLE 2					
STATION RANGE	ALIGNMENT	X (FT)	Y (FT)	Z (FT)	W (FT)
27+50 – 32+50	C–LINE	8	7	3	14
24+50 – 33+07	R–LINE	8	7	3	14
52+50 – 55+00	R–LINE	8	6	2	12
26+50 – 29+50	L–LINE	8	6	2	12
46+75 – 50+00	L–LINE	8	6	2	12

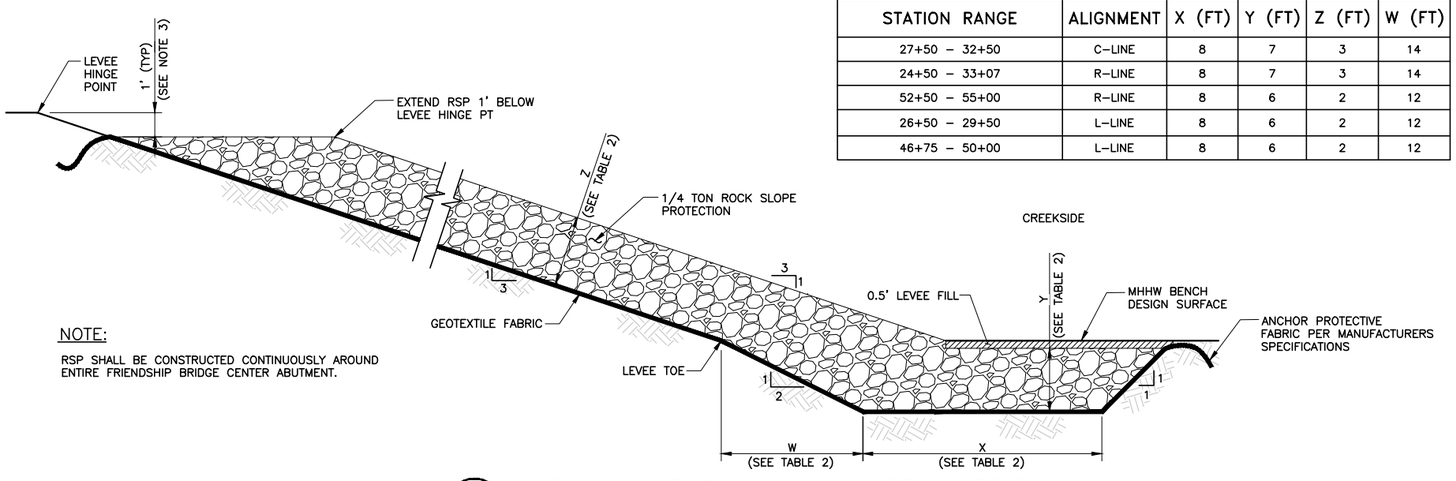

NOTE:

RSP SHALL BE CONSTRUCTED CONTINUOUSLY AROUND ENTIRE FRIENDSHIP BRIDGE CENTER ABUTMENT.

SECTION B / C-24 TYPICAL SECTION – ROCK SLOPE PROTECTION

NTS

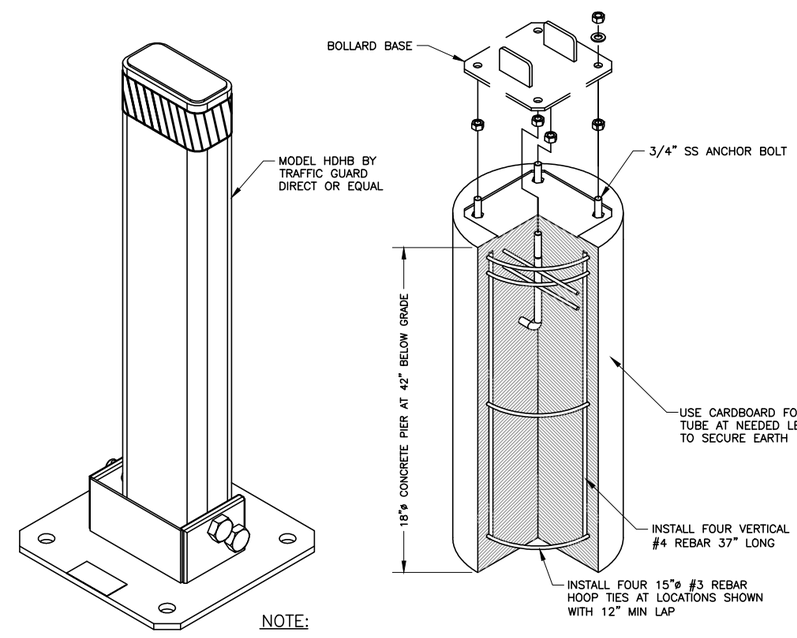

NOTE:

PAINT BOLLARD YELLOW FOR HIGH VISIBILITY

DETAIL 2 / C-18 FOLDABLE BOLLARD

NTS

USERNAME: BillShad Tue 08 Jul 2008 09:32am
FILENAME: C:\pwworking\sac\d0171341\C-34

DOCUMENT NUMBER: SFC_LP-C-1028-XXXXXXX

REV	DESCRIPTION	DATE	APPR.
	DRAFT 100% AUGUST 2014		

HDR Engineering, Inc.

DATE: JULY 2014
DESIGN: L. JONES
DRAWN: H. SUAREZ
CHECKED: P. HRADILEK

ENGINEERING CERTIFICATION

REGISTERED PROFESSIONAL ENGINEER LANCE M. JONES 98374 Exp. 9-30-15 CIVIL STATE OF CALIFORNIA

PRELIMINARY

PROJECT ENGINEER DATE

SAN FRANCISQUITO CREEK JOINT POWERS AUTHORITY

ACCEPTED BY DISTRICT

PROJECT ENGINEER DATE

PROJECT NAME AND SHEET DESCRIPTION:

SAN FRANCISQUITO CREEK FLOOD REDUCTION, ECOSYSTEM RESTORATION, & RECREATION PROJECT

TYPICAL SECTION – ROCK SLOPE PROTECTION
DETAIL – FOLDABLE BOLLARD

SCALE: AS SHOWN

VERIFY SCALES: 0 1"

BAR IS ONE INCH ON ORIGINAL DRAWING IF NOT ONE INCH ON THIS SHEET, ADJUST SCALES ACCORDINGLY

PROJECT NUMBER: 26284002

SHEET CODE: C-34

SHEET NUMBER: 48 OF 119

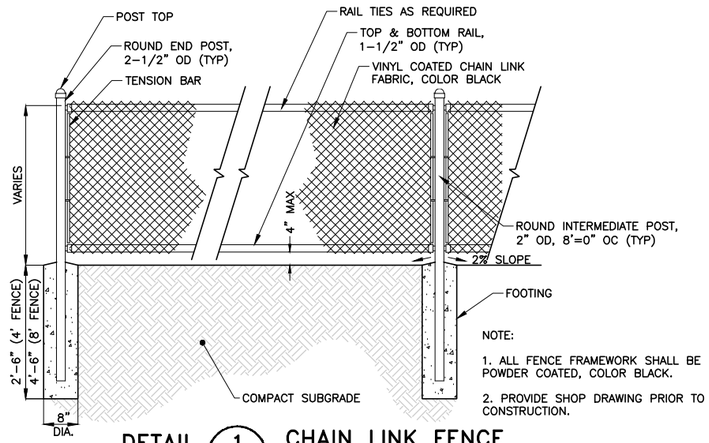

NOTE:

1. ALL FENCE FRAMEWORK SHALL BE POWDER COATED, COLOR BLACK.
2. PROVIDE SHOP DRAWING PRIOR TO CONSTRUCTION.

DETAIL 1 / C-28 CHAIN LINK FENCE

NTS

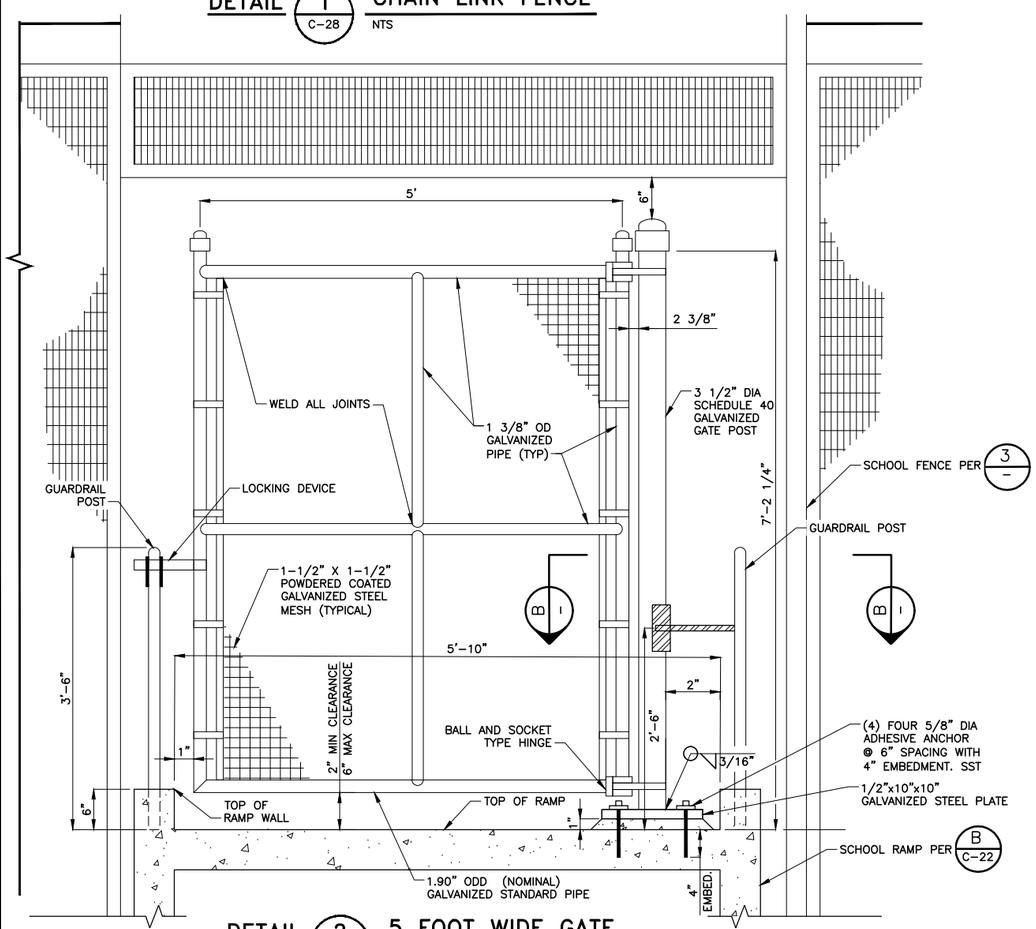

DETAIL 2 / C-22 5 FOOT WIDE GATE

NTS

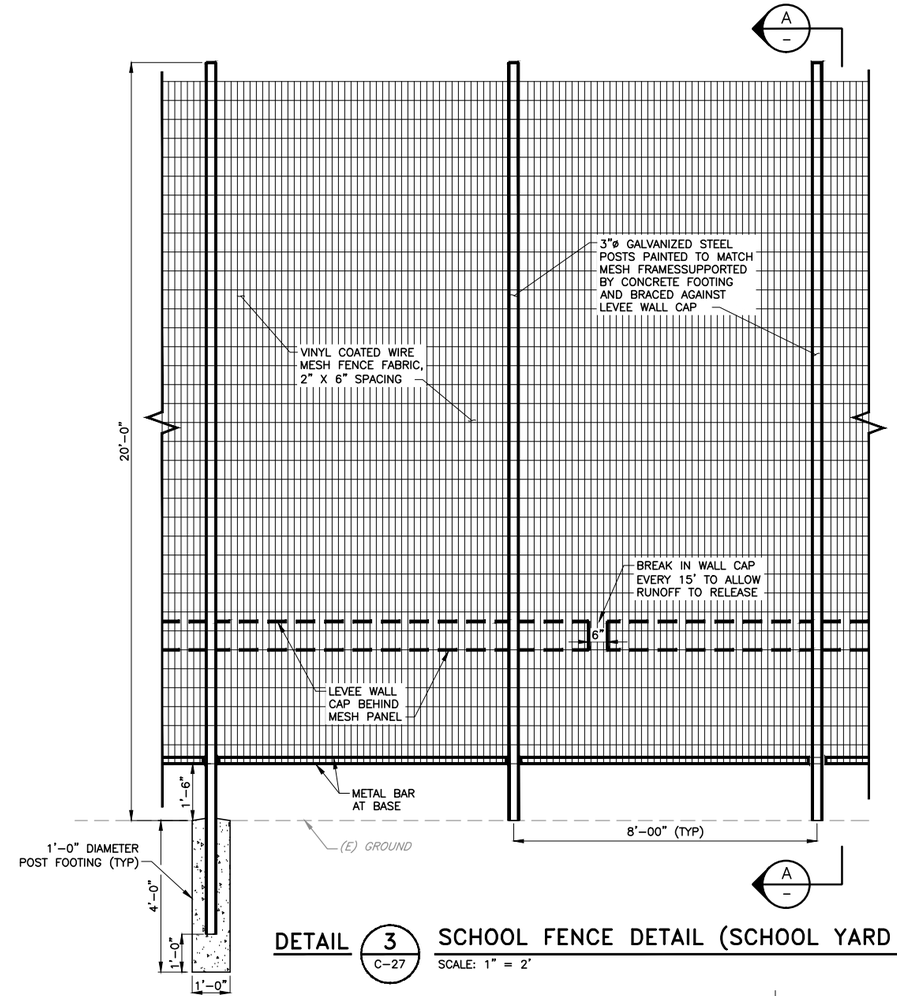

DETAIL 3 / C-27 SCHOOL FENCE DETAIL (SCHOOL YARD SIDE)

SCALE: 1" = 2'

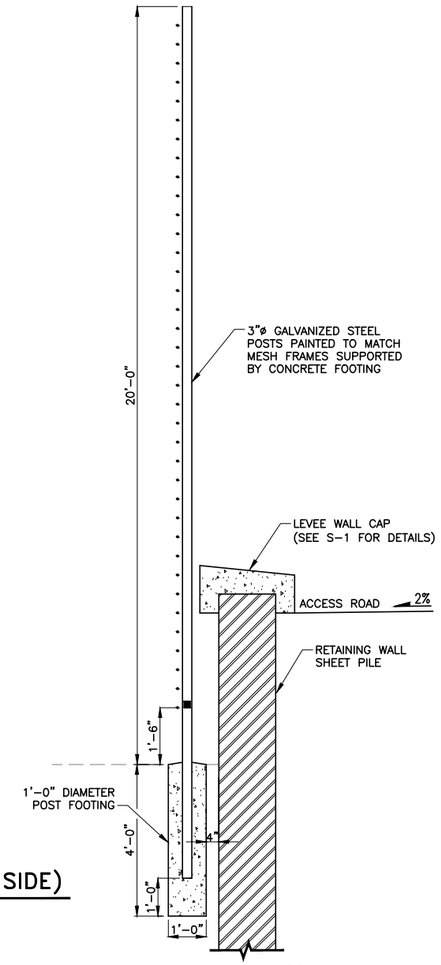

SECTION A/-

SCALE: 1" = 2'

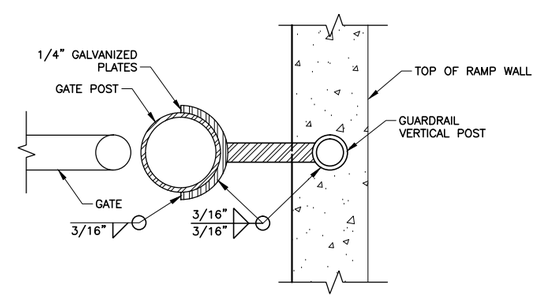

SECTION B/-

NTS

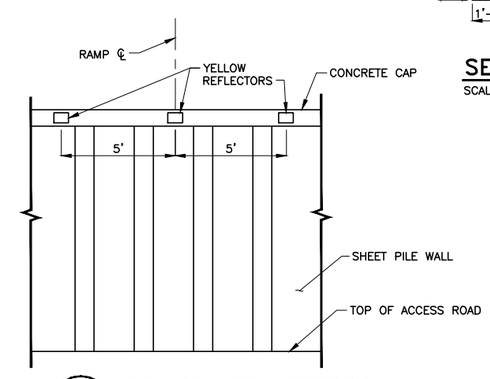

DETAIL 4 / C-18 YELLOW REFLECTORS

NTS

USERNAME: BillShad Tue 08 Jul 2008 09:32am
FILENAME: C:\pwworking\sac\d0171341\C-35

DOCUMENT NUMBER: SFC_LP-C-1028-XXXXXXX

REV	DESCRIPTION	DATE	APPR.
	DRAFT 100% AUGUST 2014		

HDR Engineering, Inc.

DATE	ENGINEERING CERTIFICATION
JULY 2014	
DESIGN L. JONES	
DRAWN H. SUAREZ	
CHECKED P. HRADILEK	PROJECT ENGINEER DATE

PRELIMINARY

SAN FRANCISQUITO CREEK JOINT POWERS AUTHORITY

ACCEPTED BY DISTRICT

PROJECT ENGINEER DATE

PROJECT NAME AND SHEET DESCRIPTION:

SAN FRANCISQUITO CREEK FLOOD REDUCTION, ECOSYSTEM RESTORATION, & RECREATION PROJECT

DETAILS – FENCE

SCALE: AS SHOWN

VERIFY SCALES: 0 1" BAR IS ONE INCH ON ORIGINAL DRAWING IF NOT ONE INCH ON THIS SHEET, ADJUST SCALES ACCORDINGLY

PROJECT NUMBER: 26284002

SHEET CODE: C-35

SHEET NUMBER: 49 OF 119

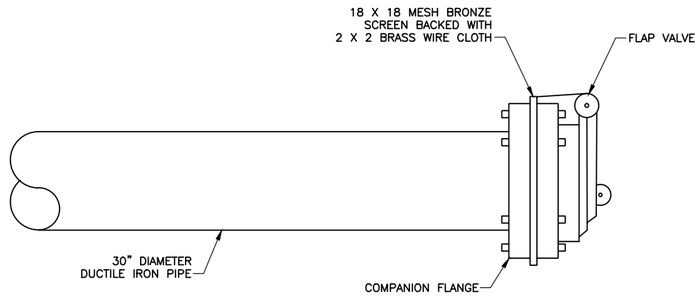

DETAIL 1 / – FLAP GATE DETAIL
NTS

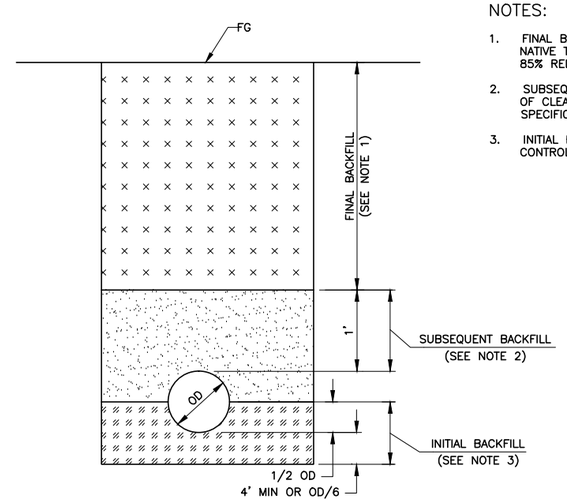

SECTION C / – TYPICAL TRENCH – NEW UTILITIES
NTS

NOTES:

1. FINAL BACKFILL SHALL CONSIST OF NATIVE TRENCH SPOILS COMPACTED TO 85% RELATIVE COMPACTION.
2. SUBSEQUENT BACKFILL SHALL CONSIST OF CLEAN SAND PER CALTRAN STANDARD SPECIFICATION SECTION 19-3.025B.
3. INITIAL BACKFILL SHALL CONSIST OF CONTROLLED LOW STRENGTH MATERIAL.

LEGEND:

- NEW UTILITY TRENCH FINAL BACKFILL
- NEW UTILITY TRENCH SUBSEQUENT BACKFILL
- NEW UTILITY TRENCH INITIAL BACKFILL

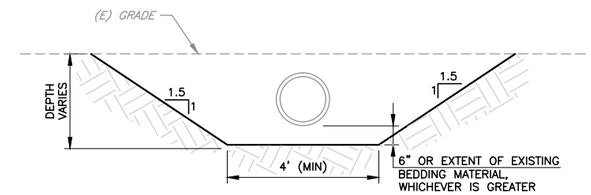

SECTION A / – TYPICAL EXISTING PIPE REMOVAL EXCAVATION DETAIL
NTS

KFILL

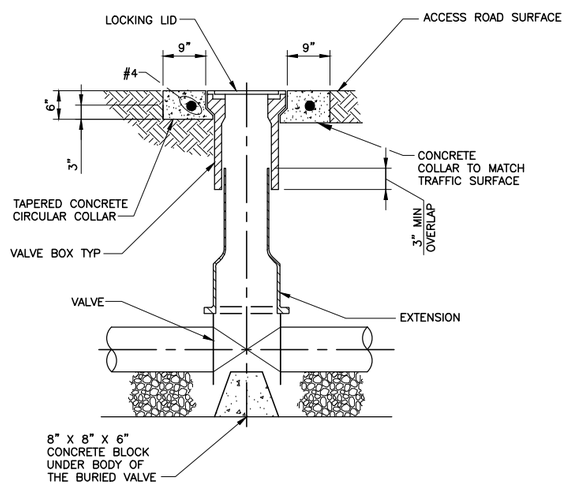

DETAIL 2 / – BURIED VALVE BOX
NTS

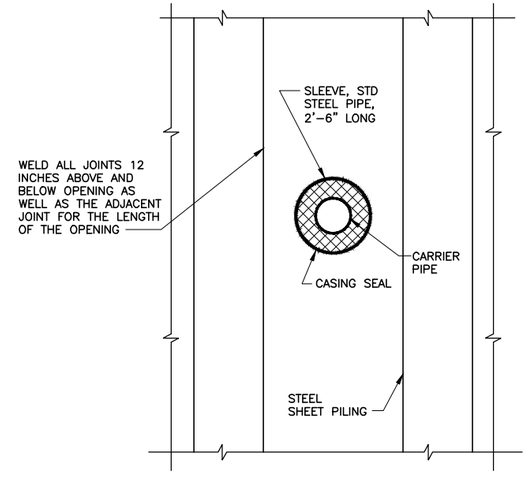

SECTION B / – PIPE PENETRATION OPENING
NTS

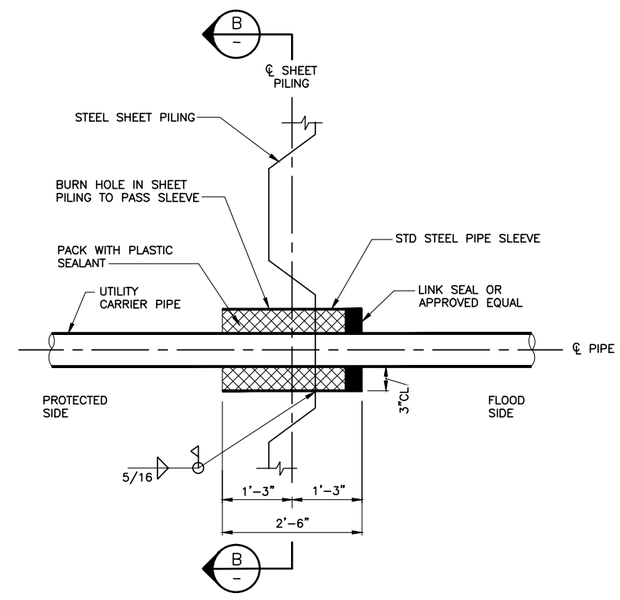

DETAIL 3 / C-44 PIPE PENETRATION OPENING
NTS

REV	DESCRIPTION	DATE	APPR.
	DRAFT 100% AUGUST 2014		

HDR Engineering, Inc.

DATE: JULY 2014
DESIGN: S. JIMENEZ
DRAWN: H. SUAREZ
CHECKED: P. HRADILEK

ENGINEERING CERTIFICATION: REGISTERED PROFESSIONAL ENGINEER LANCE M. JONES 68334 Exp. 06-30-15 CIVIL STATE OF CALIFORNIA — PRELIMINARY
PROJECT ENGINEER DATE

SAN FRANCISQUITO CREEK JOINT POWERS AUTHORITY
ACCEPTED BY DISTRICT
PROJECT ENGINEER DATE

PROJECT NAME AND SHEET DESCRIPTION:
SAN FRANCISQUITO CREEK FLOOD REDUCTION, ECOSYSTEM RESTORATION, & RECREATION PROJECT
DETAILS – PIPES

SCALE: NOT TO SCALE
VERIFY SCALES: 0 1" BAR IS ONE INCH ON ORIGINAL DRAWING IF NOT ONE INCH ON THIS SHEET, ADJUST SCALES ACCORDINGLY
PROJECT NUMBER: 130806
SHEET CODE: C-36
SHEET NUMBER: 50 OF 119

DOCUMENT NUMBER: SFC_LP-C-1028-XXXXXXX
USERNAME: BillShad Tue 08 Jul 2008 09:32am
FILENAME: C:\pwworking\sac\d0171341\C-36

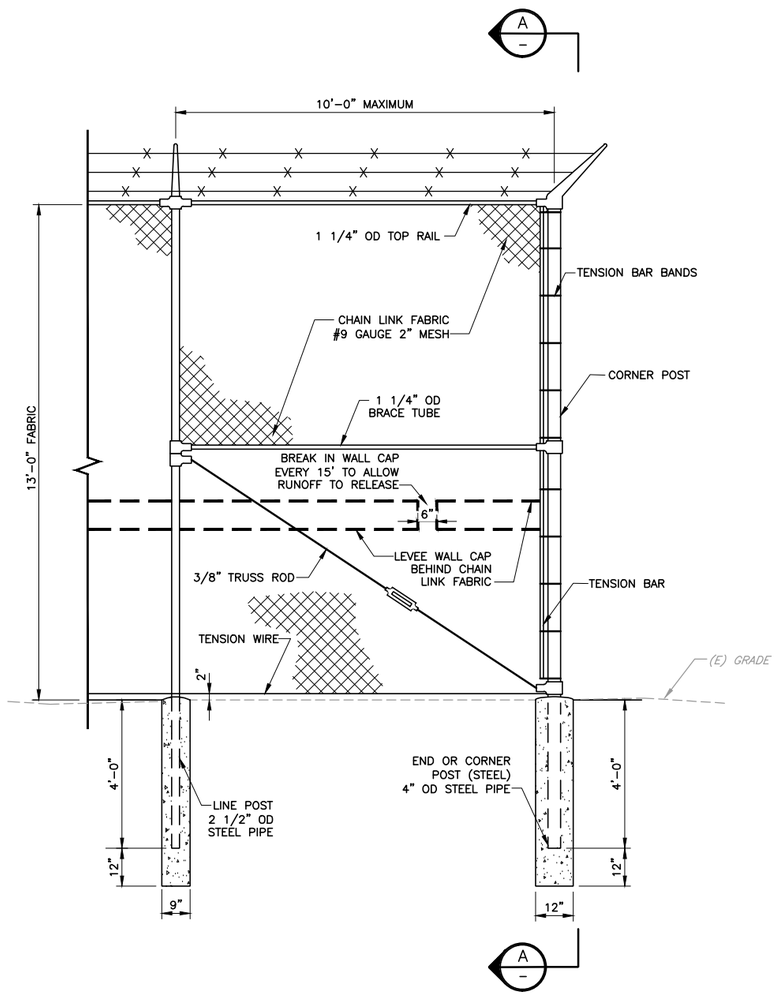

DETAIL 1 / C-31 SECURITY FENCE
SCALE: 1" = 2'

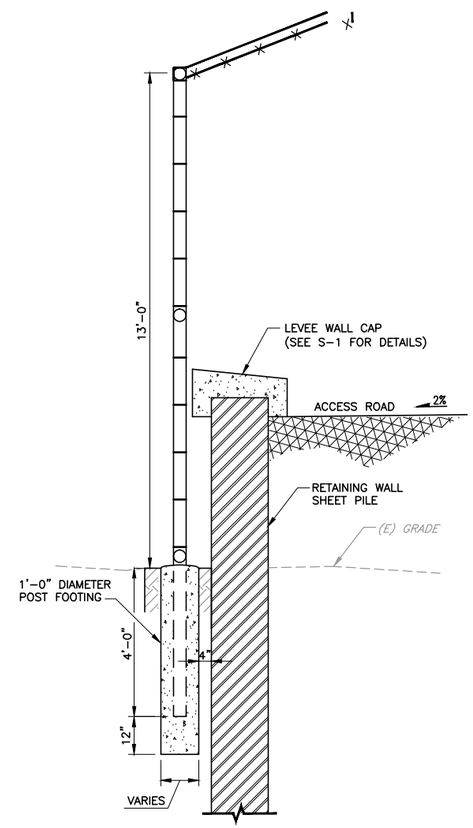

SECTION A
SCALE: 1" = 2'

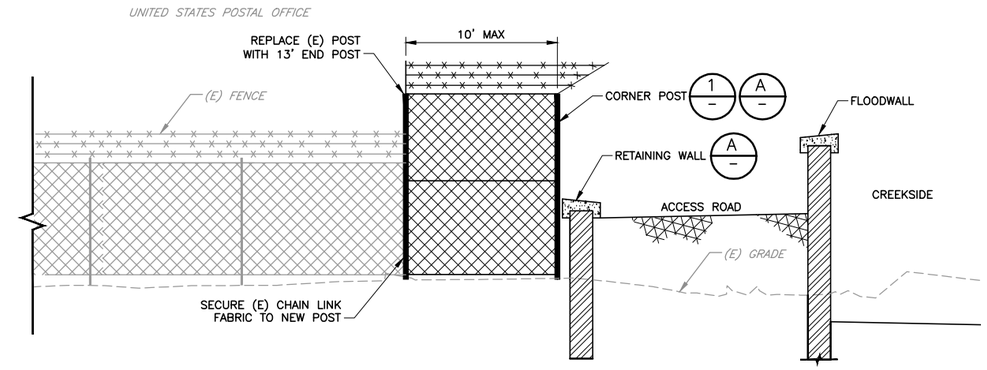

SECTION B CONNECTION TO EXISTING FENCE AT POST OFFICE
NTS

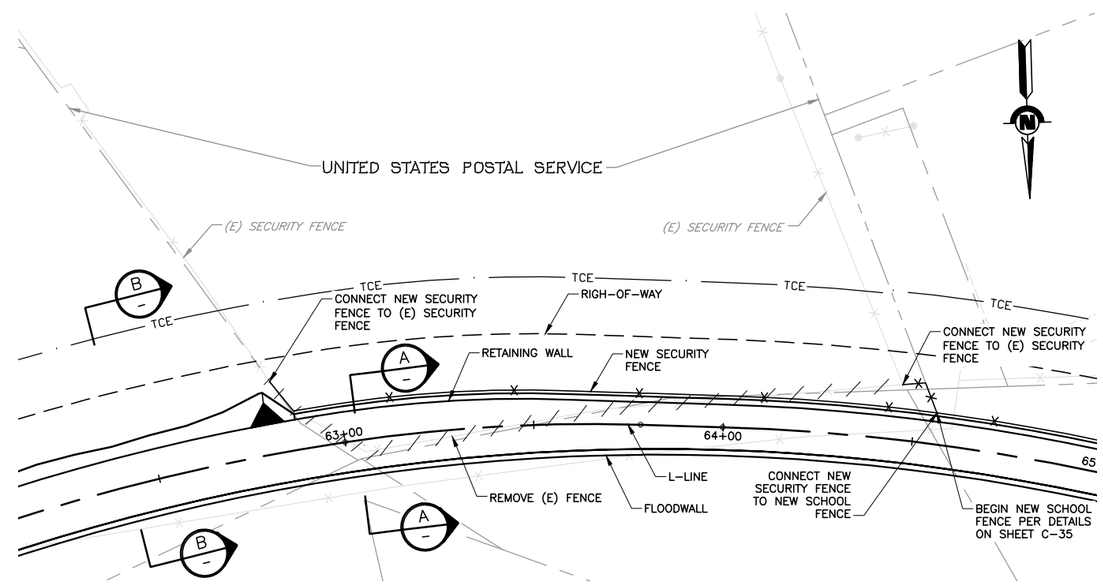

PLAN – USPS
SCALE: 1"=20'

USERNAME: BillShad Tue 08 Jul 2008 09:32am
FILENAME: C:\pwworking\sac\d0171341\C-37

DOCUMENT NUMBER: SFC_LP-C-1028-XXXXXXX

REV	DESCRIPTION	DATE	APPR.
	DRAFT 100% AUGUST 2014		

HDR Engineering, Inc.

DATE	
JULY 2014	
DESIGN	L. JONES
DRAWN	H. SUAREZ
CHECKED	P. HRADILEK

ENGINEERING CERTIFICATION
REGISTERED PROFESSIONAL ENGINEER LANCE M. JONES 68374 Exp. 9-30-15 CIVIL STATE OF CALIFORNIA
PRELIMINARY
PROJECT ENGINEER DATE

SAN FRANCISQUITO CREEK
JOINT POWERS AUTHORITY
ACCEPTED BY DISTRICT
PROJECT ENGINEER DATE

PROJECT NAME AND SHEET DESCRIPTION:
SAN FRANCISQUITO CREEK
FLOOD REDUCTION, ECOSYSTEM
RESTORATION, & RECREATION PROJECT
DETAILS – SECURITY FENCE

SCALE: NOT TO SCALE
VERIFY SCALES: 0 1"
BAR IS ONE INCH ON ORIGINAL DRAWING IF NOT ONE INCH ON THIS SHEET, ADJUST SCALES ACCORDINGLY

PROJECT NUMBER: 130806
SHEET CODE: C-37
SHEET NUMBER: 51 OF 119

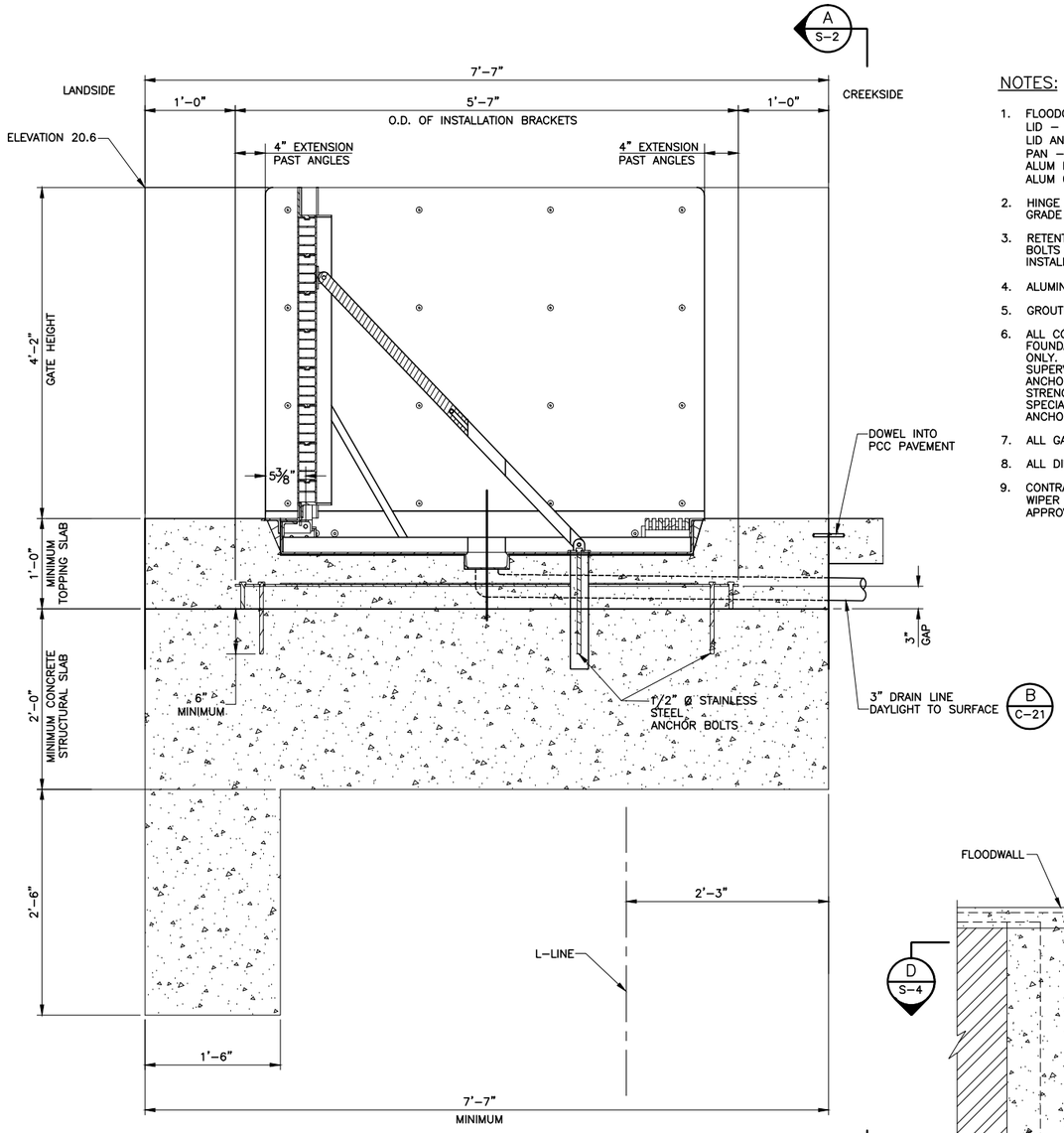

DETAIL 2 — GATE INSTALLATION DIMENSIONS

NTS

NOTES:

1. FLOODGATE MATERIAL TO BE ALUMINUM AS FOLLOWS:
   LID – 5" x 2 1/2" x 1/8" ALUM EXTRUSIONS – GRADE 6005–T5 MIN. F_Y=35 KSI
   LID AND PAN – 2" x 2" x 1/4" ALUM TUBING – GRADE 6061 MIN. F_Y=40 KSI
   PAN – 1/4" SMOOTH ALUM PLATE – GRADE 5052 MIN. F_Y=30 KSI
   ALUM FLAT BARS, STRUCTURAL ANGLES, HINGES GRADE 6061–T6 MIN. F_Y=40 KSI
   ALUM CHANNELS – 4" x 2" x 1/4" VERTICAL & 6" x 2" x 1/4" HORIZONTAL.
2. HINGE BOLTS, PINS, AND MACHINE SCREWS TO BE STAINLESS STEEL – GRADE 304, MIN. F_Y =90 KSI.
3. RETENTION ARM ANCHOR BOLTS SHALL BE STAINLESS STEEL STANDARD THREAD BOLTS SET IN VINYLESTER BASED ADHESIVE CONTAINED IN A GLASS CAPSULE, INSTALLED PER SIMPSON STRONG TIE SPECIFICATIONS.
4. ALUMINUM TO BE WELDED WITH ALUMINUM WIRE – PER 4043 AWS A5.10 3/64.
5. GROUT TO BE COMMERCIAL GRADE "NON–SHRINK" GROUT.
6. ALL CONCRETE FOUNDATION POURS AND THEIR TIE–DOWNS TO EXISTING FOUNDATIONS SHOWN IN THESE DRAWINGS ARE FOR ILLUSTRATIVE PURPOSES ONLY. DESIGN OF THE CONCRETE TOPPING SLAB IS BY OTHERS. DESIGN AND SUPERVISION OF INSTALLATION OF RETENTION ARMS, ANCHOR BOLTS, AND GATE ANCHORS ARE BY FLOODBREAK. ALL CONCRETE TO BE 4000 PSI MINIMUM 28 DAY STRENGTH. REINFORCED IN EACH DIRECTION WITH ASTM – A615 MIN. Fy=60 KSI. SPECIAL ATTENTION SHALL BE PAID TO PROPER SUPPORT OF RETENTION ARM ANCHOR BOLTS INTO THE SUPPORTING CONCRETE.
7. ALL GASKET MATERIAL TO BE EPDM RUBBER.
8. ALL DIMENSIONS ARE IN FEET AND INCHES.
9. CONTRACTOR SHALL SUBMIT A WORK PLAN FOR PROPOSED FOUNDATION AND WIPER WALLS. WORK ON THE FLOODGATE SHALL NOT COMMENCE BEFORE APPROVAL OF THE WORK PLAN HAS BEEN RECEIVED.

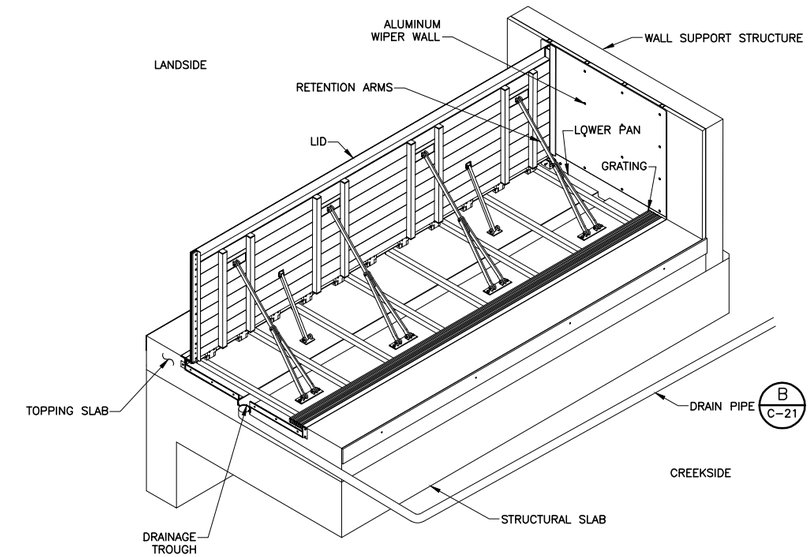

DETAIL 1 — ISOMETRIC VIEW – TYPICAL FLOODGATE

NTS (VIEW SHOWN IS SECTIONED IN HALF)

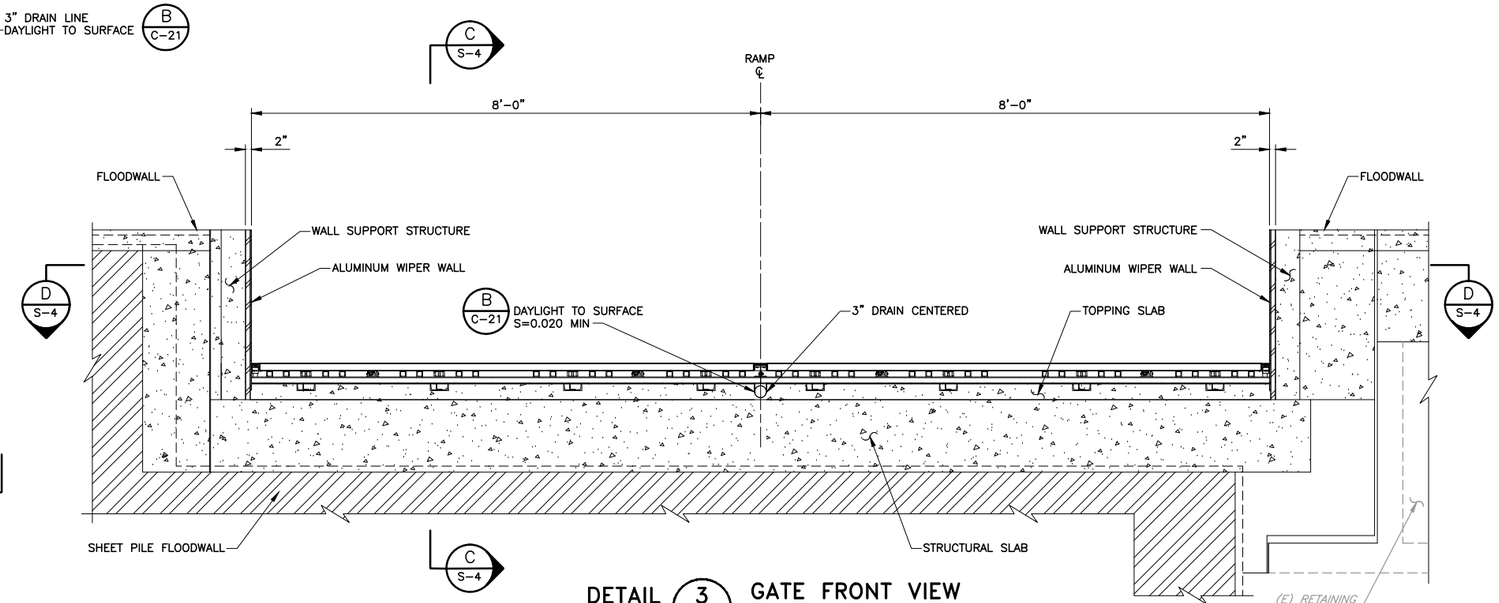

DETAIL 3 — GATE FRONT VIEW

NTS

REV	DESCRIPTION	DATE	APPR.
	DRAFT 100% AUGUST 2014		

HDR Engineering, Inc.

DATE: JULY 2014
DESIGN: L. JONES
DRAWN: H. SUAREZ
CHECKED: P. HRADILEK

ENGINEERING CERTIFICATION
REGISTERED PROFESSIONAL ENGINEER LANCE M. JONES 66362 Exp. 06-30-15 CIVIL STATE OF CALIFORNIA
PRELIMINARY
PROJECT ENGINEER DATE

SAN FRANCISQUITO CREEK JOINT POWERS AUTHORITY
ACCEPTED BY DISTRICT
PROJECT ENGINEER DATE

PROJECT NAME AND SHEET DESCRIPTION:
SAN FRANCISQUITO CREEK FLOOD REDUCTION, ECOSYSTEM RESTORATION, & RECREATION PROJECT
DETAILS – FLOODGATE

SCALE: AS SHOWN
VERIFY SCALES: 0 — 1"
BAR IS ONE INCH ON ORIGINAL DRAWING IF NOT ONE INCH ON THIS SHEET, ADJUST SCALES ACCORDINGLY

PROJECT NUMBER: 26284002
SHEET CODE: C-38
SHEET NUMBER: 52 OF 119

DOCUMENT NUMBER: SFC_LP-C-1028-XXXXXXX

USERNAME: BillShad Tue 08 Jul 2008 09:32am
FILENAME: C:\pwworking\sac\d0171341\C-38

KEY NOTE:

1. SETTLEMENT PLATE SHALL BE CONSTRUCTED OF 3/4" PLYWOOD (EXTERIOR) – COATED WITH WATERPROOF SEALANT.
2. SEE SHEETS G-6 AND G-7 FOR LOCATION OF SETTLEMENT PLATES.
3. CONTRACTOR SHALL INSURE THAT THE GEOGRID LAYER IS NOT DAMAGED BY THE PLACEMENT OF THE SETTLEMENT PLATE. A 1 FOOT SEPARATION IS NECESSARY.

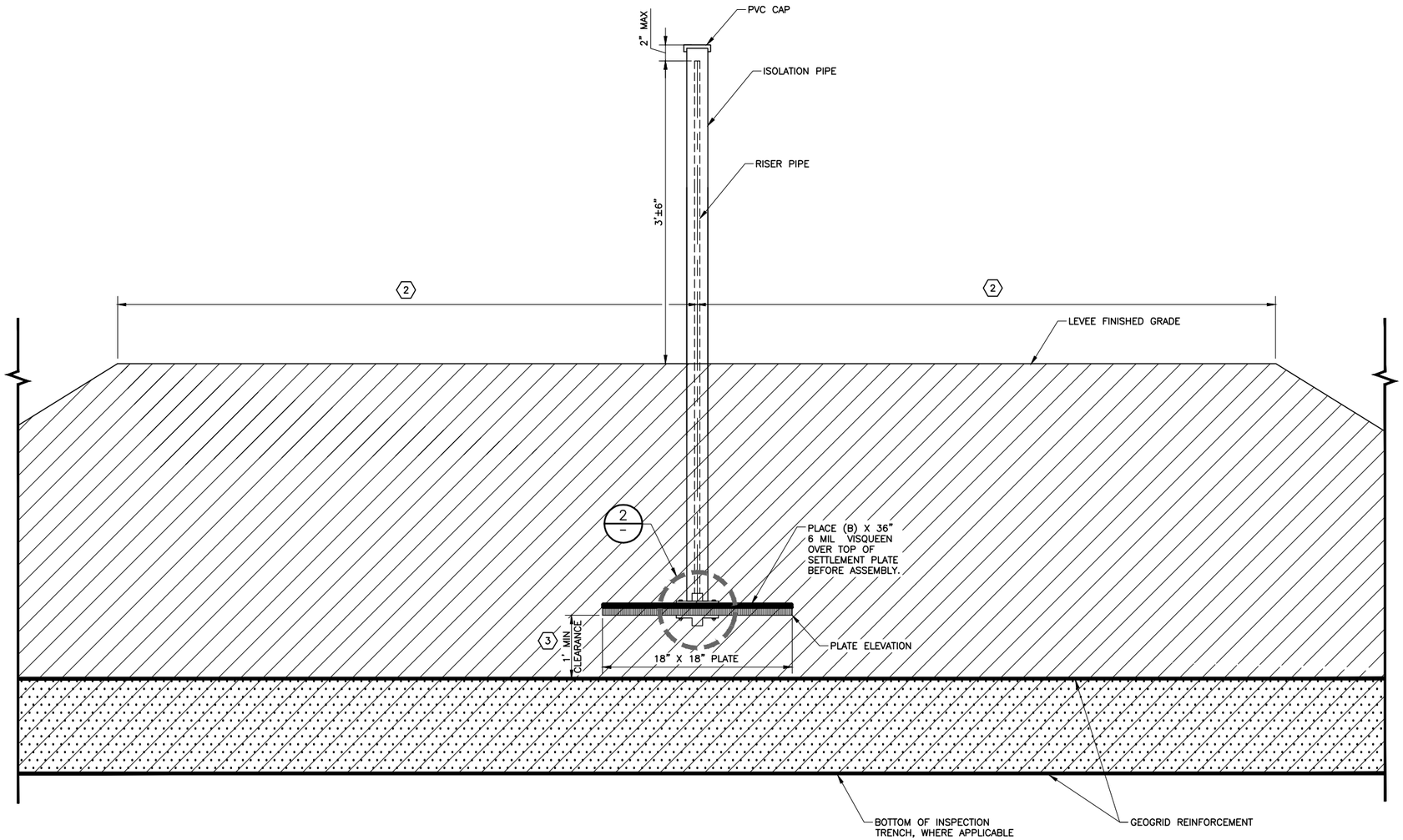

DETAIL 1 SETTLEMENT PLATE
NTS

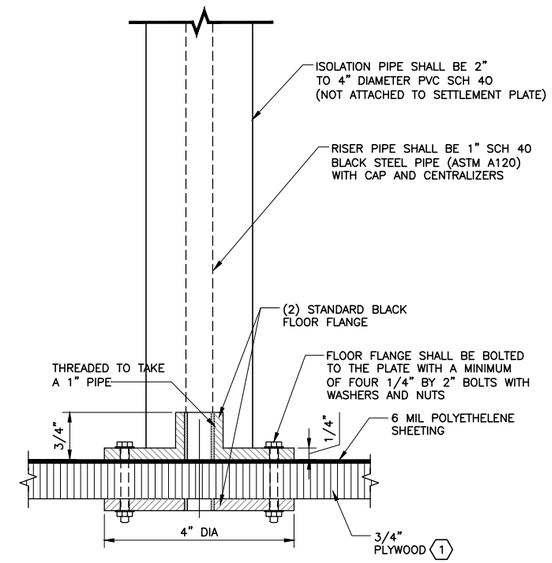

DETAIL 2 SETTLEMENT PLATE
NTS

LEGEND:

- LIMITS OF NEW LEVEE FILL
- LIMITS OF INSPECTION TRENCH

USERNAME: BillShad Tue 08 Jul 2008 09:32am
FILENAME: C:\pwworking\sac\d0171341\C-39

DOCUMENT NUMBER: SFC_LP-C-1028-XXXXXXX

REV	DESCRIPTION	DATE	APPR.
	DRAFT 100% AUGUST 2014		

HDR Engineering, Inc.

DATE	
JULY 2014	
DESIGN	L. JONES
DRAWN	H. SUAREZ
CHECKED	P. HRADILEK

ENGINEERING CERTIFICATION
REGISTERED PROFESSIONAL ENGINEER LANCE M. JONES 68374 Exp. 09-30-15 CIVIL STATE OF CALIFORNIA
PRELIMINARY
PROJECT ENGINEER DATE

SAN FRANCISQUITO CREEK JOINT POWERS AUTHORITY
ACCEPTED BY DISTRICT
PROJECT ENGINEER DATE

PROJECT NAME AND SHEET DESCRIPTION:
SAN FRANCISQUITO CREEK FLOOD REDUCTION, ECOSYSTEM RESTORATION, & RECREATION PROJECT
DETAILS – SETTLEMENT PLATE

SCALE: AS SHOWN
VERIFY SCALES: 0 1"
BAR IS ONE INCH ON ORIGINAL DRAWING IF NOT ONE INCH ON THIS SHEET, ADJUST SCALES ACCORDINGLY

PROJECT NUMBER: 26284002
SHEET CODE: C-39
SHEET NUMBER: 53 OF 119

EXISTING UTILITIES SHEET LAYOUT PLAN

SCALE: 1"=200'

USERNAME: BillShad Tue 08 Jul 2008 09:32am
FILENAME: C:\pwworking\sac\d0171341\C-40

DOCUMENT NUMBER:SFC_LP-G-1028-XXXXXXX

REV	DESCRIPTION	DATE	APPR.
	DRAFT 100% AUGUST 2014		

HDR Engineering, Inc.

DATE	JULY 2014
DESIGN	L. JONES
DRAWN	H. SUAREZ
CHECKED	P. HRADILEK

ENGINEERING CERTIFICATION
REGISTERED PROFESSIONAL ENGINEER LANCE M. JONES 68374 Exp. 09-30-15 CIVIL STATE OF CALIFORNIA
PRELIMINARY
PROJECT ENGINEER DATE

SAN FRANCISQUITO CREEK JOINT POWERS AUTHORITY
ACCEPTED BY DISTRICT
PROJECT ENGINEER DATE

PROJECT NAME AND SHEET DESCRIPTION:
SAN FRANCISQUITO CREEK FLOOD REDUCTION, ECOSYSTEM RESTORATION, & RECREATION PROJECT
UTILITY SHEET LAYOUT PLAN
OVERALL LAYOUT

SCALE: 1" = 200'
VERIFY SCALES: 0 1"
BAR IS ONE INCH ON ORIGINAL DRAWING IF NOT ONE INCH ON THIS SHEET, ADJUST SCALES ACCORDINGLY

PROJECT NUMBER: 26284002
SHEET CODE: C-40
SHEET NUMBER: 54 OF 119

FOR CONTINUATION SEE SHEET C-42

PLAN

SCALE: 1"=40'

USERNAME: BillShad Tue 08 Jul 2008 09:32am
FILENAME: C:\pwworking\sac\d0171341\C-41

DOCUMENT NUMBER: SFC_LP-C-1028-XXXXXX

REV	DESCRIPTION	DATE	APPR.
	DRAFT 100% AUGUST 2014		

HDR Engineering, Inc.

DATE	JULY 2014
DESIGN	L. JONES
DRAWN	H. SUAREZ
CHECKED	P. HRADILEK

ENGINEERING CERTIFICATION

REGISTERED PROFESSIONAL ENGINEER LANCE M. JONES 9931 Exp. 06-30-15 CIVIL STATE OF CALIFORNIA

PRELIMINARY

PROJECT ENGINEER DATE

SAN FRANCISQUITO CREEK JOINT POWERS AUTHORITY

ACCEPTED BY DISTRICT

PROJECT ENGINEER DATE

PROJECT NAME AND SHEET DESCRIPTION:

SAN FRANCISQUITO CREEK FLOOD REDUCTION, ECOSYSTEM RESTORATION, & RECREATION PROJECT

UTILITY PLAN

STA 6+00 TO STA 18+00 (C-LINE)

SCALE: 1" = 40'

VERIFY SCALES: 0 — 1"

BAR IS ONE INCH ON ORIGINAL DRAWING IF NOT ONE INCH ON THIS SHEET, ADJUST SCALES ACCORDINGLY

PROJECT NUMBER: 26284002

SHEET CODE: C-41

SHEET NUMBER: 55 OF 119

NOTE:

1. SS LINE TO BE RELOCATED BY OTHERS. CONTRACTOR TO COORDINATE RELOCATION WITH EAST PALO ALTO SANITARY DISTRICT.
2. REMOVE (E) UTILITIES PER A / C-36
3. CONTRACTOR SHALL COORDINATE UTILITY REMOVAL WITH PALO ALTO GOLF COURSE TO INSURE THAT THE REMOVALS DO NOT DISRUPT UTILITY OPERATION WITHIN THE GOLF COURSE.

KEY NOTE:

1. REMOVE EX STORM DRAIN LINE WITHIN R/W. CAP AT R/W.
2. REMOVE EX WATER LINE WITHIN R/W. CAP AT R/W.
3. REMOVE EX JOINT TRENCH WITHIN R/W. CAP AT R/W.
4. REMOVE ABANDONED SANITARY SEWER LINE TO LIMITS SHOWN. CAP AT R/W.

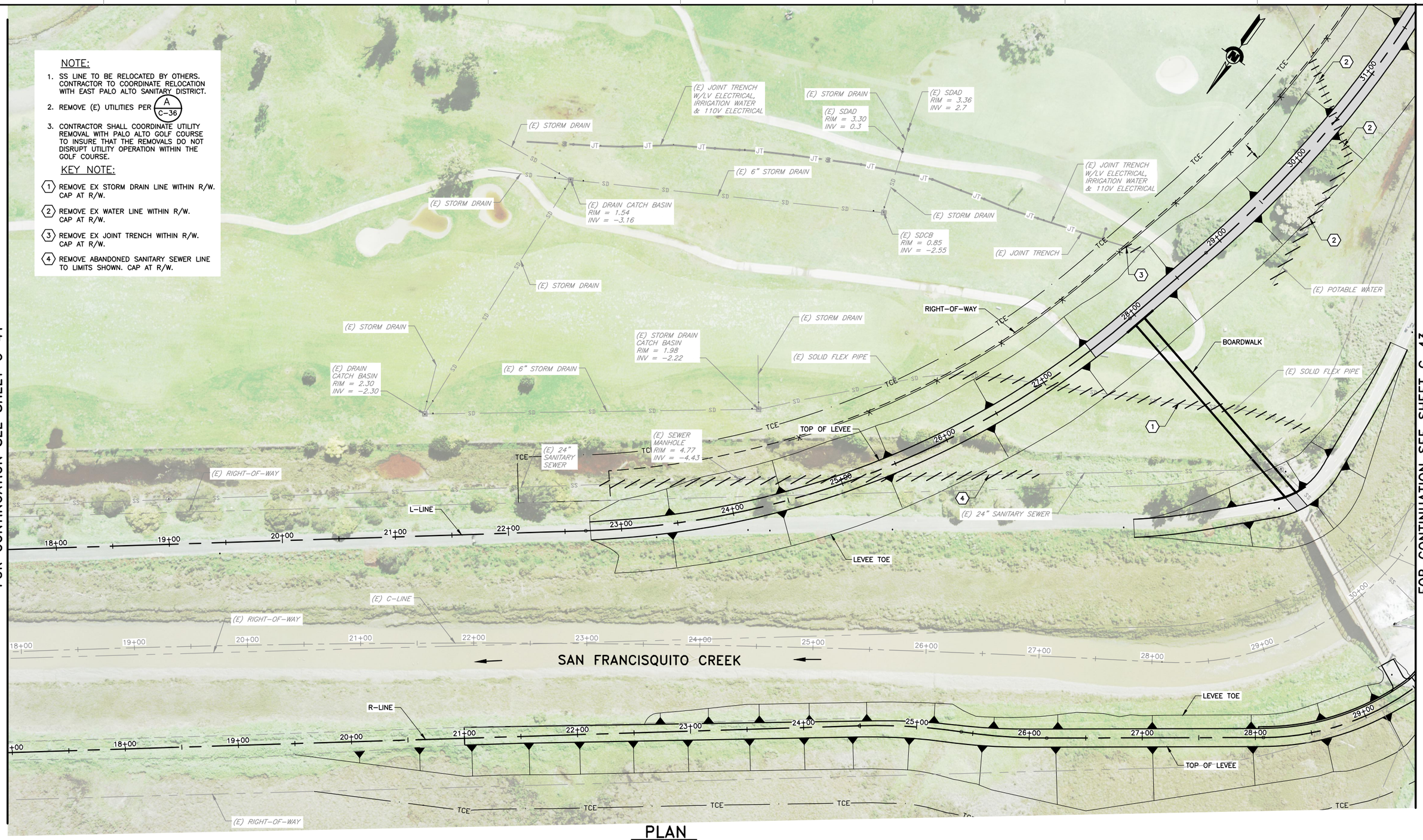

PLAN
SCALE: 1"=40'

FOR CONTINUATION SEE SHEET C-41

FOR CONTINUATION SEE SHEET C-43

USERNAME: BillShad Tue 08 Jul 2008 09:32am
FILENAME: C:\pwworking\sac\d0171341\C-42

DOCUMENT NUMBER: SFC_LP-C-1028-XXXXXX

REV	DESCRIPTION	DATE	APPR.
	DRAFT 100% AUGUST 2014		

HDR Engineering, Inc.

DATE	JULY 2014
DESIGN	L. JONES
DRAWN	H. SUAREZ
CHECKED	P. HRADILEK

ENGINEERING CERTIFICATION
REGISTERED PROFESSIONAL ENGINEER LANCE M. JONES 68372 Exp. 09-30-15 CIVIL STATE OF CALIFORNIA
PRELIMINARY
PROJECT ENGINEER DATE

SAN FRANCISQUITO CREEK JOINT POWERS AUTHORITY

ACCEPTED BY DISTRICT
PROJECT ENGINEER DATE

PROJECT NAME AND SHEET DESCRIPTION:
SAN FRANCISQUITO CREEK FLOOD REDUCTION, ECOSYSTEM RESTORATION, & RECREATION PROJECT
UTILITY PLAN
STA 18+00 TO STA 31+00 (C-LINE)

SCALE: 1" = 40'
VERIFY SCALES: 0 — 1"
BAR IS ONE INCH ON ORIGINAL DRAWING IF NOT ONE INCH ON THIS SHEET, ADJUST SCALES ACCORDINGLY

PROJECT NUMBER: 26284002
SHEET CODE: C-42
SHEET NUMBER: 56 OF 119

FOR CONTINUATION SEE SHEET C-42

NOTE:

1. SS LINE TO BE RELOCATED BY OTHERS. CONTRACTOR TO COORDINATE RELOCATION WITH EAST PALO ALTO SANITARY DISTRICT.
2. REMOVE (E) UTILITIES PER A / C-36
3. CONTRACTOR SHALL COORDINATE UTILITY REMOVAL WITH PALO ALTO GOLF COURSE TO INSURE THAT THE REMOVALS DO NOT DISRUPT UTILITY OPERATION WITHIN THE GOLF COURSE.

KEY NOTE:

1. REMOVE EX SOLID FLEX PIPE WITHIN R/W.
2. REMOVE ABANDONED SEWER LINE TO LIMITS SHOWN. CAP AT R/W.
3. REMOVE EXISTING VAULT.
4. PROTECT IN PLACE EXISTING PUMP STATION AND ADJACENT UTILITIES.

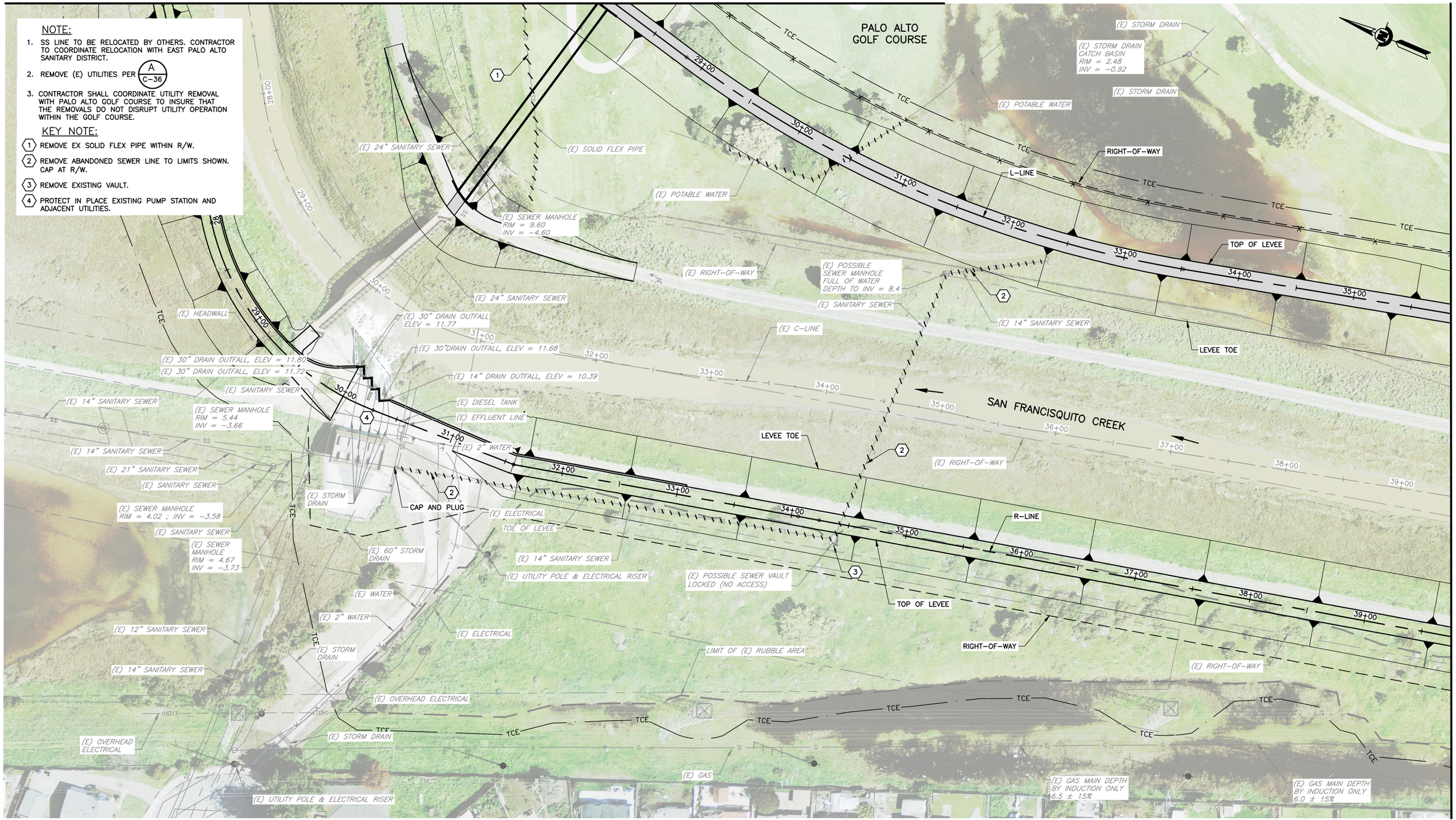

PLAN

SCALE: 1"=40'

FOR CONTINUATION SEE SHEET C-44

REV	DESCRIPTION	DATE	APPR.
	DRAFT 100% AUGUST 2014		

HDR Engineering, Inc.

DATE: JULY 2014
DESIGN: L. JONES
DRAWN: H. SUAREZ
CHECKED: P. HRADILEK

ENGINEERING CERTIFICATION: REGISTERED PROFESSIONAL ENGINEER LANCE M. JONES C 68374 Exp. 09-30-15 CIVIL STATE OF CALIFORNIA — PRELIMINARY

PROJECT ENGINEER DATE

SAN FRANCISQUITO CREEK JOINT POWERS AUTHORITY

ACCEPTED BY DISTRICT

PROJECT ENGINEER DATE

PROJECT NAME AND SHEET DESCRIPTION:

SAN FRANCISQUITO CREEK FLOOD REDUCTION, ECOSYSTEM RESTORATION, & RECREATION PROJECT

UTILITY PLAN

STA 30+00 TO STA 39+00 (C-LINE)

SCALE: 1" = 40'

VERIFY SCALES: 0 — 1"

BAR IS ONE INCH ON ORIGINAL DRAWING IF NOT ONE INCH ON THIS SHEET, ADJUST SCALES ACCORDINGLY

PROJECT NUMBER: 26284002

SHEET CODE: C-43

SHEET NUMBER: 57 OF 119

DOCUMENT NUMBER: SFC_LP-C-1028-XXXXXX

USERNAME: BillShad Tue 08 Jul 2008 09:32am
FILENAME: C:\pwworking\sac\d0171341\C-43

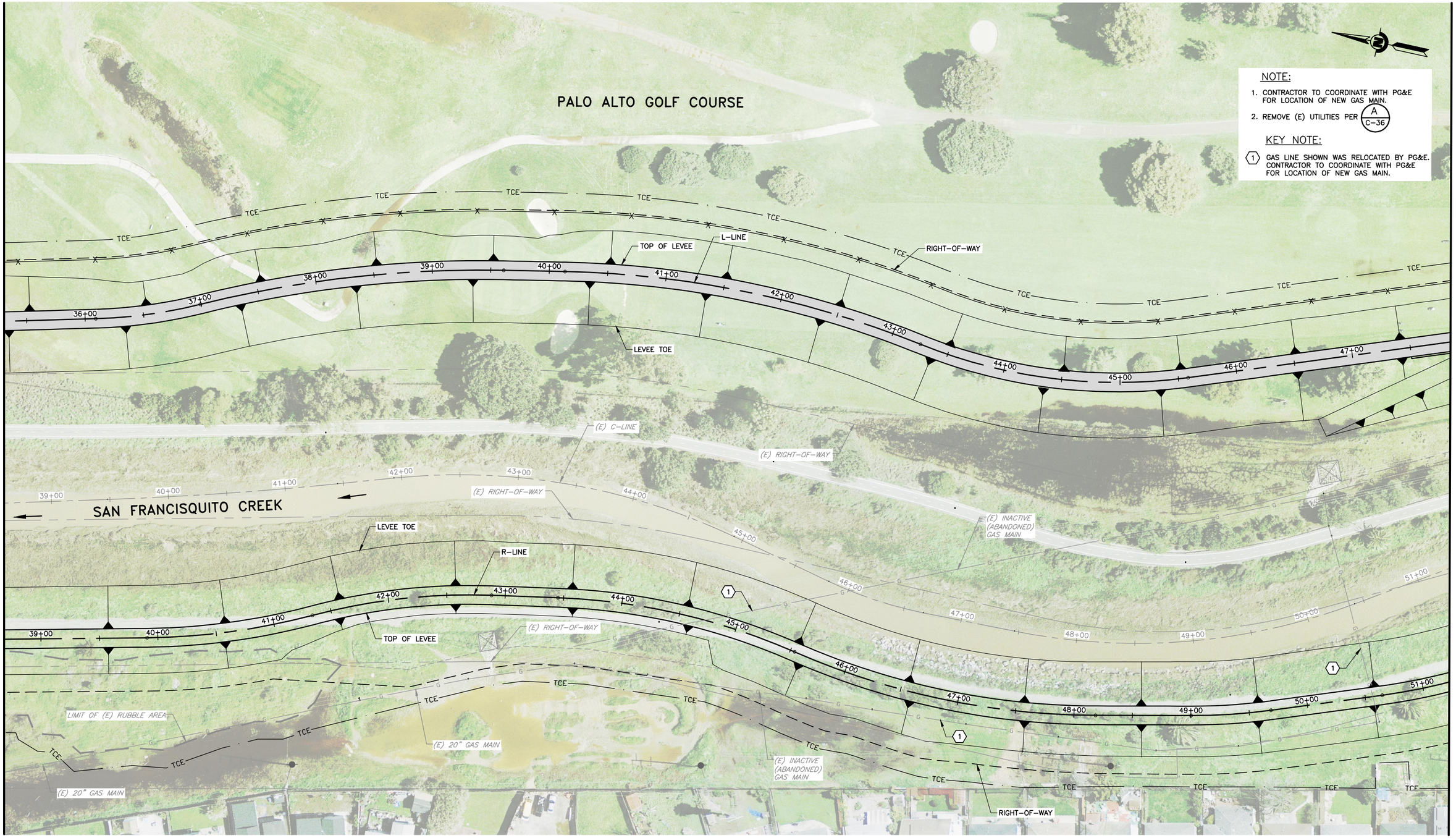

FOR CONTINUATION SEE SHEET C-43

FOR CONTINUATION SEE SHEET C-45

PLAN

SCALE: 1"=40'

USERNAME: BillShad Tue 08 Jul 2008 09:32am
FILENAME: C:\pwworking\sac\d0171341\C-44

DOCUMENT NUMBER: SFC_LP-C-1028-XXXXXX

REV	DESCRIPTION	DATE	APPR.
	DRAFT 100% AUGUST 2014		

HDR Engineering, Inc.

DATE	JULY 2014
DESIGN	L. JONES
DRAWN	H. SUAREZ
CHECKED	P. HRADILEK

ENGINEERING CERTIFICATION
REGISTERED PROFESSIONAL ENGINEER LANCE M. JONES 063742 Exp. 03-30-15 CIVIL STATE OF CALIFORNIA
PRELIMINARY
PROJECT ENGINEER DATE

SAN FRANCISQUITO CREEK JOINT POWERS AUTHORITY

ACCEPTED BY DISTRICT
PROJECT ENGINEER DATE

PROJECT NAME AND SHEET DESCRIPTION:

SAN FRANCISQUITO CREEK FLOOD REDUCTION, ECOSYSTEM RESTORATION, & RECREATION PROJECT

UTILITY PLAN
STA 39+00 TO STA 51+00 (C-LINE)

SCALE: 1" = 40'
VERIFY SCALES: 0 — 1"
BAR IS ONE INCH ON ORIGINAL DRAWING IF NOT ONE INCH ON THIS SHEET, ADJUST SCALES ACCORDINGLY

PROJECT NUMBER: 26284002
SHEET CODE: C-44
SHEET NUMBER: 58 OF 119

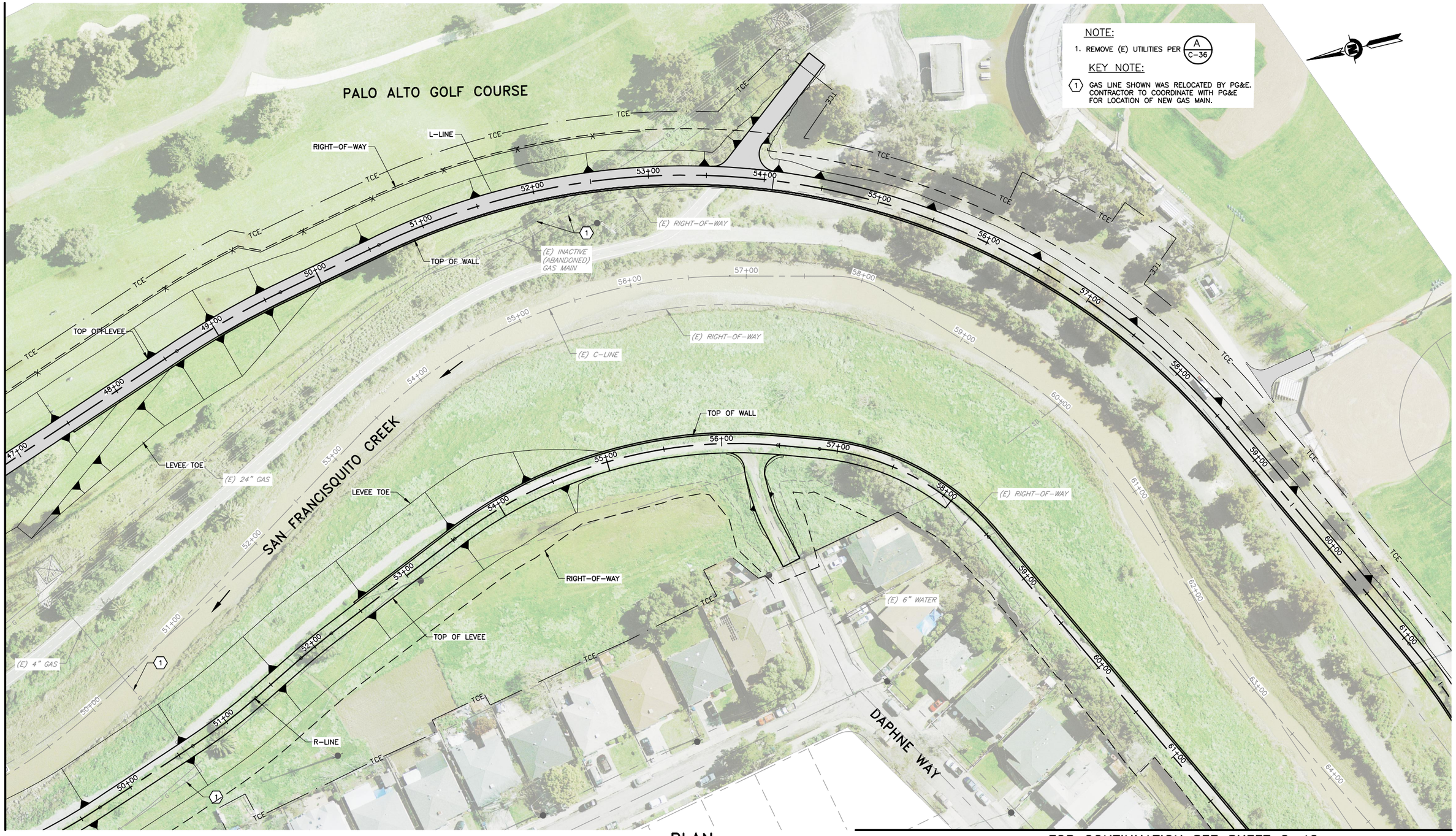

NOTE:

1. REMOVE (E) UTILITIES PER A / C-36

KEY NOTE:

1. GAS LINE SHOWN WAS RELOCATED BY PG&E. CONTRACTOR TO COORDINATE WITH PG&E FOR LOCATION OF NEW GAS MAIN.

PLAN

SCALE: 1"=40'

FOR CONTINUATION SEE SHEET C-44

FOR CONTINUATION SEE SHEET C-46

USERNAME: BillShad Tue 08 Jul 2008 09:32am
FILENAME: C:\pwworking\sac\d0171341\C-45

DOCUMENT NUMBER: SFC_LP-C-1028-XXXXXX

REV	DESCRIPTION	DATE	APPR.
	DRAFT 100% AUGUST 2014		

HDR Engineering, Inc.

DATE	JULY 2014
DESIGN	L. JONES
DRAWN	H. SUAREZ
CHECKED	P. HRADILEK

ENGINEERING CERTIFICATION

REGISTERED PROFESSIONAL ENGINEER LANCE M. JONES 68374 Exp. 09-30-15 CIVIL STATE OF CALIFORNIA

PRELIMINARY

PROJECT ENGINEER DATE

SAN FRANCISQUITO CREEK JOINT POWERS AUTHORITY

ACCEPTED BY DISTRICT

PROJECT ENGINEER DATE

PROJECT NAME AND SHEET DESCRIPTION:

SAN FRANCISQUITO CREEK FLOOD REDUCTION, ECOSYSTEM RESTORATION, & RECREATION PROJECT

UTILITY PLAN

STA 51+00 TO STA 63+00 (C-LINE)

SCALE: 1" = 40'

VERIFY SCALES: 0 — 1"

BAR IS ONE INCH ON ORIGINAL DRAWING IF NOT ONE INCH ON THIS SHEET, ADJUST SCALES ACCORDINGLY

PROJECT NUMBER: 26284002

SHEET CODE: C-45

SHEET NUMBER: 59 OF 119

NOTE:

1. REMOVE (E) UTILITIES PER (A / C-36)

KEY NOTE:

1. REMOVE AND DISPOSE OF EXISTING SD LINE. CAP AT R/W.
2. REMOVE AND DISPOSE OF EXISTING SD AND INLET.
3. REMOVE AND DISPOSE OF CITY OF PALO ALTO 2.5" WATER LINE WITHIN R/W. CAP AT R/W. COORDINATE WITH CITY OF PALO ALTO UTILITIES DEPARTMENT BEFORE REMOVING THE LINE.
4. REMOVE AND DISPOSE OF CITY OF PALO ALTO GAS LINE WITHIN R/W. CAP AT R/W. COORDINATE WITH CITY OF PALO ALTO UTILITIES DEPARTMENT BEFORE REMOVING THE LINE.

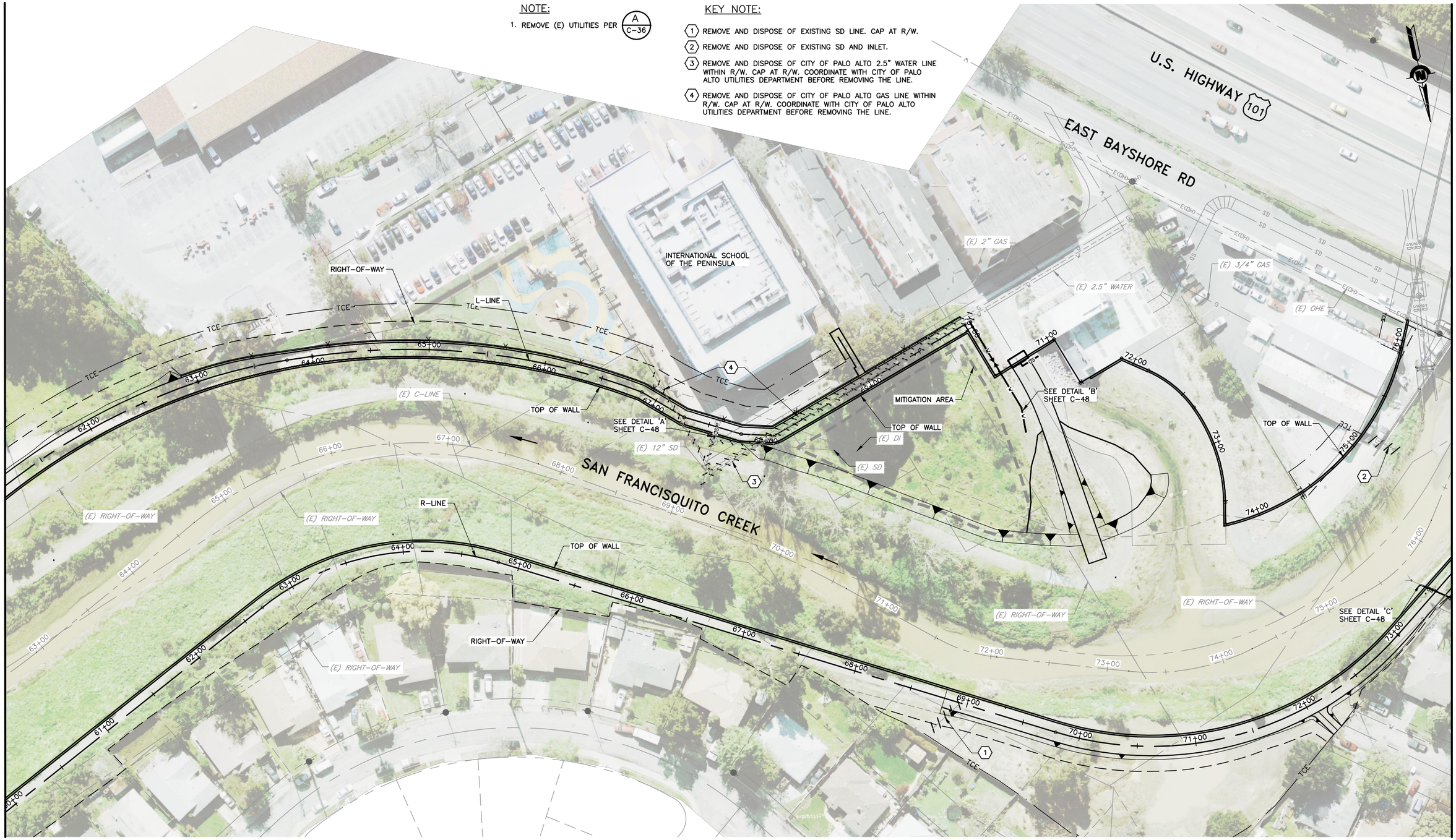

PLAN

SCALE: 1"=40'

USERNAME: BillShad Tue 08 Jul 2008 09:32am
FILENAME: C:\pwworking\sac\d0171341\C-46

DOCUMENT NUMBER: SFC_LP-C-1028-XXXXXX

REV	DESCRIPTION	DATE	APPR.
	DRAFT 100% AUGUST 2014		

HDR Engineering, Inc.

DATE	JULY 2014
DESIGN	L. JONES
DRAWN	H. SUAREZ
CHECKED	P. HRADILEK

ENGINEERING CERTIFICATION

REGISTERED PROFESSIONAL ENGINEER LANCE M. JONES 68374 Exp. 09-30-15 CIVIL STATE OF CALIFORNIA

PRELIMINARY

PROJECT ENGINEER DATE

SAN FRANCISQUITO CREEK JOINT POWERS AUTHORITY

ACCEPTED BY DISTRICT

PROJECT ENGINEER DATE

PROJECT NAME AND SHEET DESCRIPTION:

SAN FRANCISQUITO CREEK FLOOD REDUCTION, ECOSYSTEM RESTORATION, & RECREATION PROJECT

UTILITY PLAN

STA 63+00 TO STA 76+00 (C-LINE)

SCALE: 1" = 40'

VERIFY SCALES: 0 1"

BAR IS ONE INCH ON ORIGINAL DRAWING IF NOT ONE INCH ON THIS SHEET, ADJUST SCALES ACCORDINGLY

PROJECT NUMBER: 26284002

SHEET CODE: C-46

SHEET NUMBER: 60 OF 119

FOR CONTINUATION SEE SHEET C-46

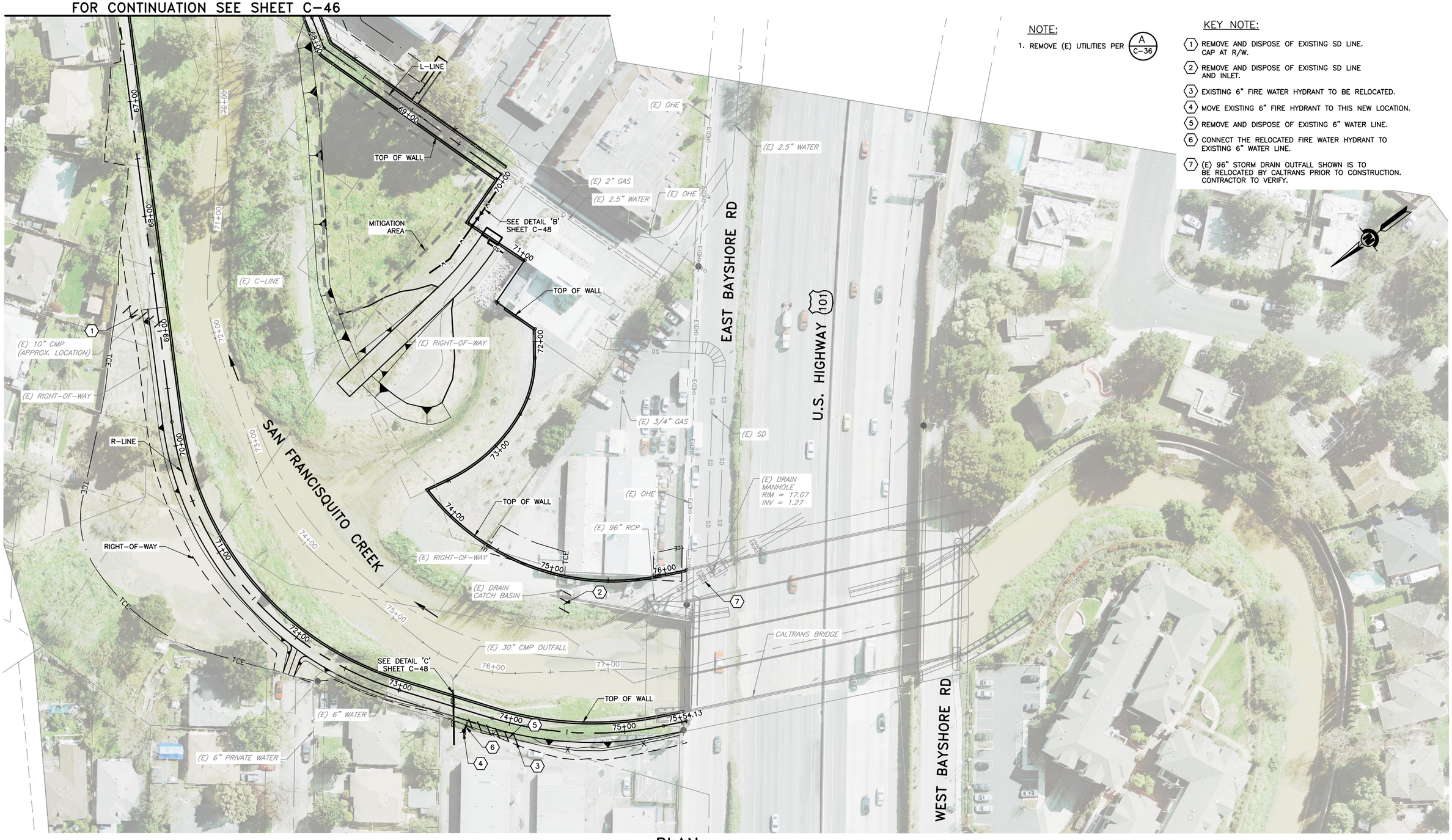

PLAN
SCALE: 1"=40'

NOTE:

1. REMOVE (E) UTILITIES PER A / C-36

KEY NOTE:

1. REMOVE AND DISPOSE OF EXISTING SD LINE. CAP AT R/W.
2. REMOVE AND DISPOSE OF EXISTING SD LINE AND INLET.
3. EXISTING 6" FIRE WATER HYDRANT TO BE RELOCATED.
4. MOVE EXISTING 6" FIRE HYDRANT TO THIS NEW LOCATION.
5. REMOVE AND DISPOSE OF EXISTING 6" WATER LINE.
6. CONNECT THE RELOCATED FIRE WATER HYDRANT TO EXISTING 6" WATER LINE.
7. (E) 96" STORM DRAIN OUTFALL SHOWN IS TO BE RELOCATED BY CALTRANS PRIOR TO CONSTRUCTION. CONTRACTOR TO VERIFY.

REV	DESCRIPTION	DATE	APPR.
	DRAFT 100% AUGUST 2014		

HDR Engineering, Inc.

DATE: JULY 2014
DESIGN: L. JONES
DRAWN: H. SUAREZ
CHECKED: P. HRADILEK

ENGINEERING CERTIFICATION
REGISTERED PROFESSIONAL ENGINEER LANCE M. JONES 68374 Exp. 09-30-15 CIVIL STATE OF CALIFORNIA
PRELIMINARY
PROJECT ENGINEER DATE

SAN FRANCISQUITO CREEK JOINT POWERS AUTHORITY
ACCEPTED BY DISTRICT
PROJECT ENGINEER DATE

PROJECT NAME AND SHEET DESCRIPTION:
SAN FRANCISQUITO CREEK FLOOD REDUCTION, ECOSYSTEM RESTORATION, & RECREATION PROJECT
UTILITY PLAN
STA 70+00 TO STA 77+50 (C-LINE)

SCALE: 1" = 40'
VERIFY SCALES: 0 — 1"
BAR IS ONE INCH ON ORIGINAL DRAWING IF NOT ONE INCH ON THIS SHEET, ADJUST SCALES ACCORDINGLY

PROJECT NUMBER: 26284002
SHEET CODE: C-47
SHEET NUMBER: 61 OF 119

DOCUMENT NUMBER: SFC_LP-C-1028-XXXXXX

USERNAME: BillShad Tue 08 Jul 2008 09:32am
FILENAME: C:\pwworking\sac\d0171341\C-47

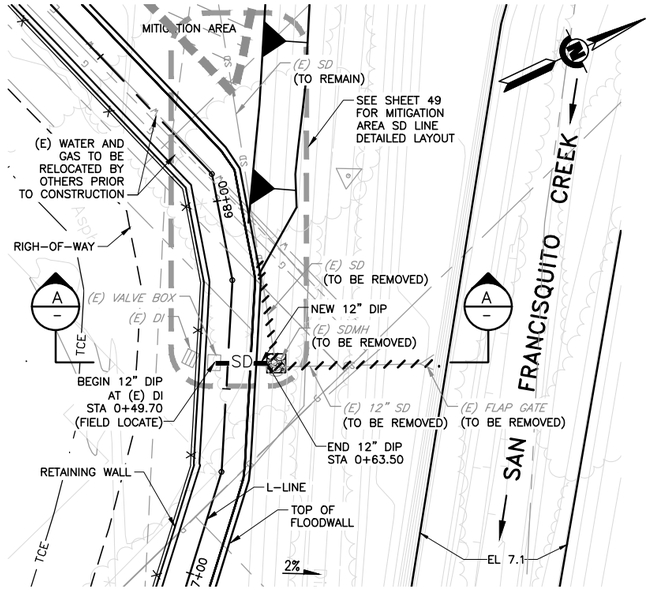

PLAN – SD OUTFALL LINE

SCALE: 1"=20'

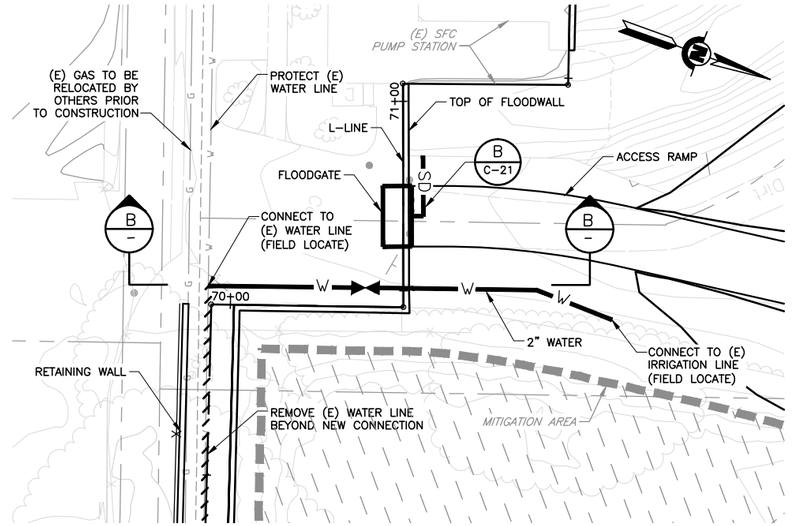

PLAN – WATER LINE

SCALE: 1"=20'

NOTE:

1. STORM DRAIN(S) AND WATER ALIGNMENTS NOT SHOWN FOR CLARITY.

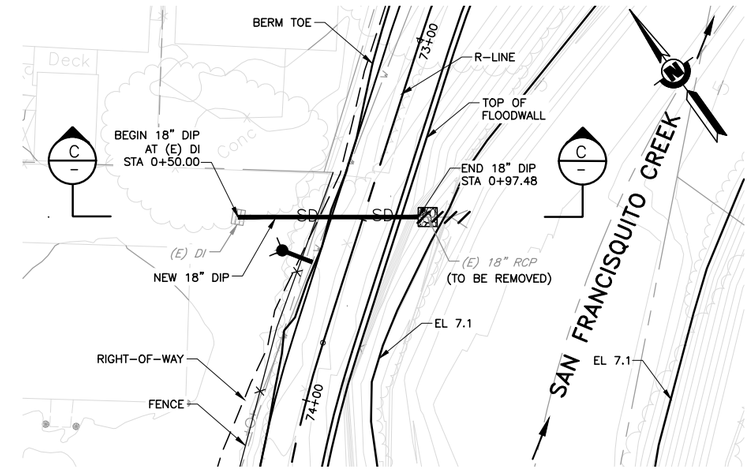

PLAN – SD OUTFALL LINE

SCALE: 1"=20'

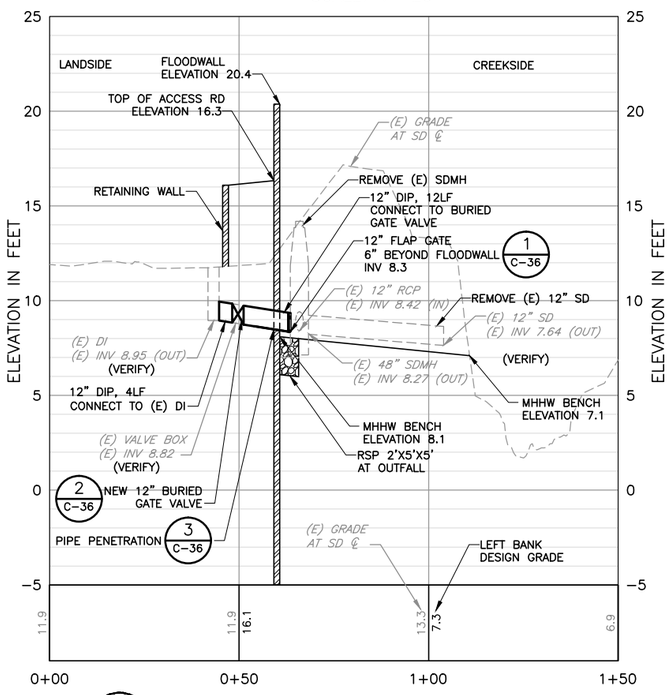

A PROFILE – SD OUTFALL LINE

HORIZ: 1"=20'
VERT: 1"=4'

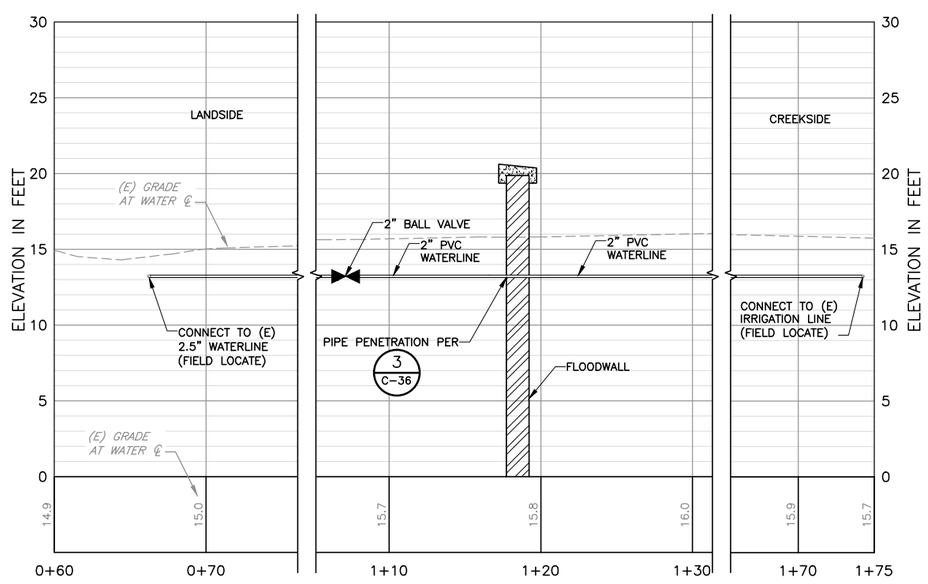

B PROFILE – WATER LINE

HORIZ: 1"=5'
VERT: 1"=5'

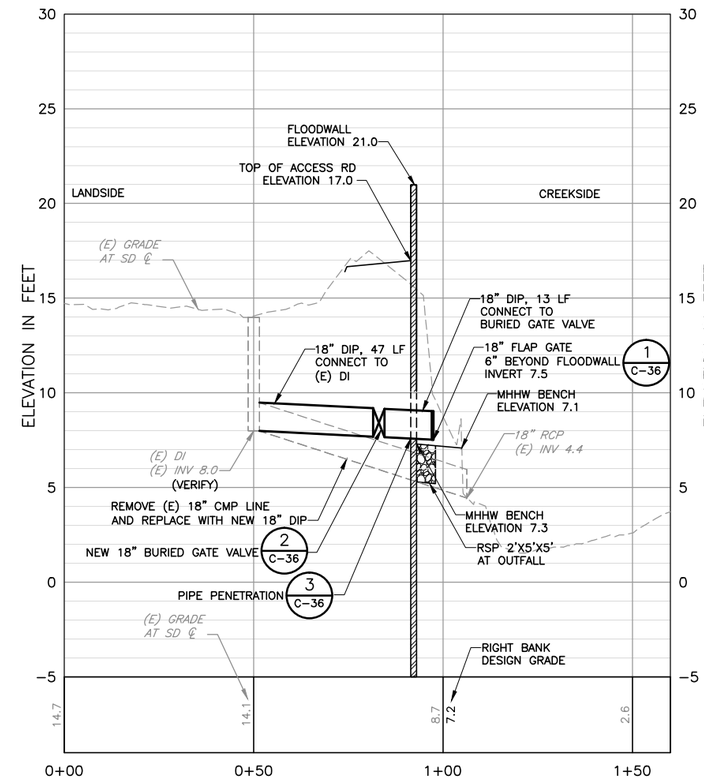

C PROFILE – SD OUTFALL LINE

HORIZ: 1"=20'
VERT: 1"=4'

REV	DESCRIPTION	DATE	APPR.
	DRAFT 100% AUGUST 2014		

HDR Engineering, Inc.

DATE: JULY 2014
DESIGN: L. JONES
DRAWN: H. SUAREZ
CHECKED: P. HRADILEK

ENGINEERING CERTIFICATION: REGISTERED PROFESSIONAL ENGINEER LANCE M. JONES 68374 Exp. 06-30-15 CIVIL STATE OF CALIFORNIA — PRELIMINARY

PROJECT ENGINEER DATE

SAN FRANCISQUITO CREEK JOINT POWERS AUTHORITY

ACCEPTED BY DISTRICT

PROJECT ENGINEER DATE

PROJECT NAME AND SHEET DESCRIPTION:
SAN FRANCISQUITO CREEK
FLOOD REDUCTION, ECOSYSTEM
RESTORATION, & RECREATION PROJECT
PLAN AND PROFILE
NEW UTILITIES

SCALE: AS SHOWN
VERIFY SCALES: 0 — 1"
BAR IS ONE INCH ON ORIGINAL DRAWING IF NOT ONE INCH ON THIS SHEET, ADJUST SCALES ACCORDINGLY

PROJECT NUMBER: 26284002
SHEET CODE: C-48
SHEET NUMBER: 62 OF 119

DOCUMENT NUMBER: SFC_LP-C-1028-XXXXXXX

USERNAME: BillShad Tue 08 Jul 2008 09:32am
FILENAME: C:\pwworking\sac\d0171341\C-48

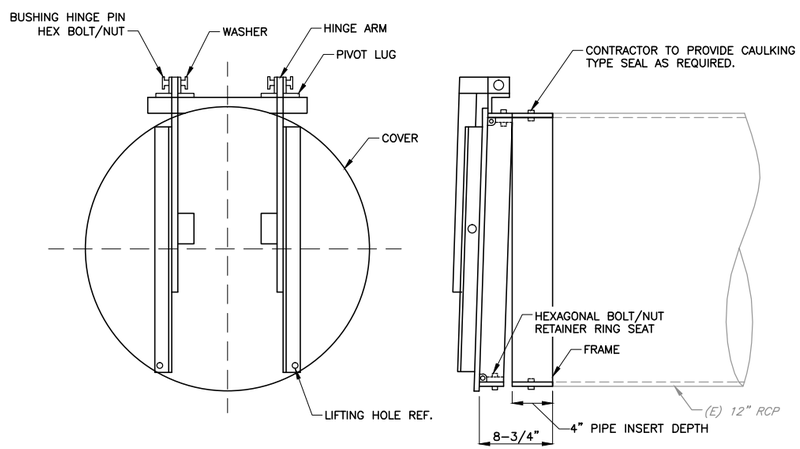

DETAIL 1/– FLAP GATE DETAIL

NTS

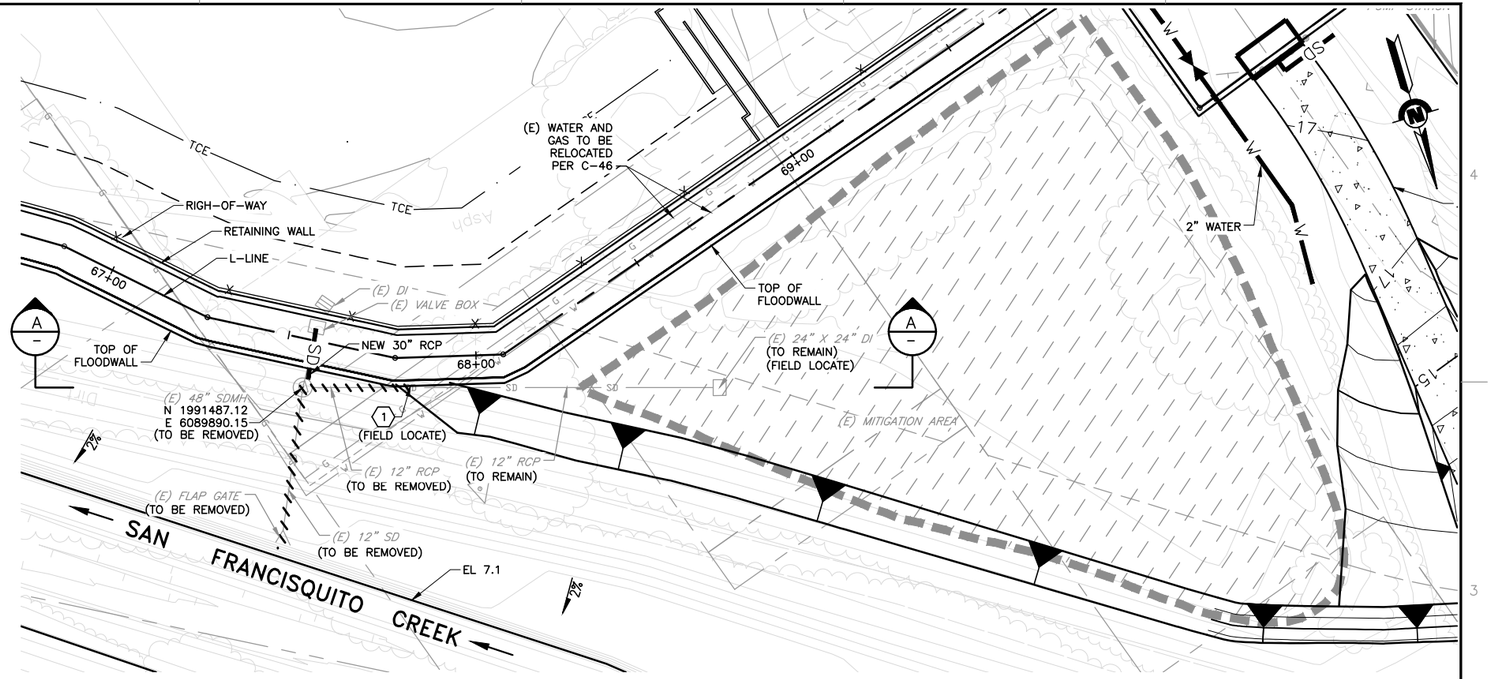

PLAN – SD OUTFALL LINE

SCALE: 1"=20'

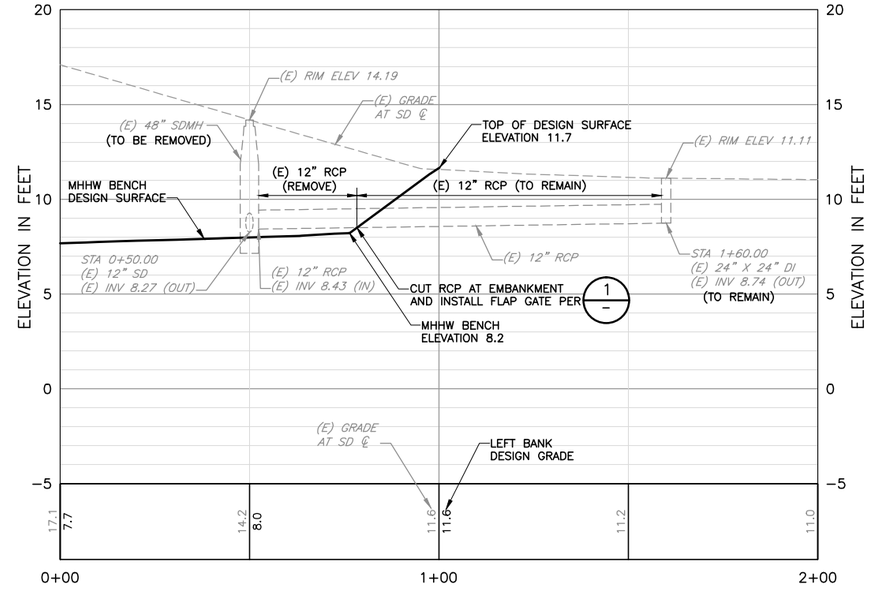

A/– PROFILE – SD OUTFALL LINE

HORIZ: 1"=20'
VERT: 1"=4'

KEY NOTE:

1. END REMOVAL OF EXISTING STORM DRAIN AT EMBANKMENT. INSTALL FLAP GATE PER 1/–

NOTE:

1. STORM DRAIN ALIGNMENT NOT SHOWN FOR CLARITY.

REV	DESCRIPTION	DATE	APPR.
	DRAFT 100% AUGUST 2014		

HDR Engineering, Inc.

DATE: JULY 2014
DESIGN: L. JONES
DRAWN: H. SUAREZ
CHECKED: P. HRADILEK

ENGINEERING CERTIFICATION: REGISTERED PROFESSIONAL ENGINEER LANCE M. JONES 98374 Exp. 9-30-15 CIVIL STATE OF CALIFORNIA — PRELIMINARY

PROJECT ENGINEER DATE

SAN FRANCISQUITO CREEK JOINT POWERS AUTHORITY

ACCEPTED BY DISTRICT

PROJECT ENGINEER DATE

PROJECT NAME AND SHEET DESCRIPTION:

SAN FRANCISQUITO CREEK FLOOD REDUCTION, ECOSYSTEM RESTORATION, & RECREATION PROJECT

PLAN AND PROFILE/DETAIL
STORM DRAIN – MITIGATION AREA

SCALE: AS SHOWN

VERIFY SCALES: 0 1"
BAR IS ONE INCH ON ORIGINAL DRAWING IF NOT ONE INCH ON THIS SHEET, ADJUST SCALES ACCORDINGLY

PROJECT NUMBER: 26284002

SHEET CODE: C-49

SHEET NUMBER: 63 OF 119

DOCUMENT NUMBER: SFC_LP-C-1028-XXXXXXX

USERNAME: BillShad Tue 08 Jul 2008 09:32am
FILENAME: C:\pwworking\sac\d0171341\C-49

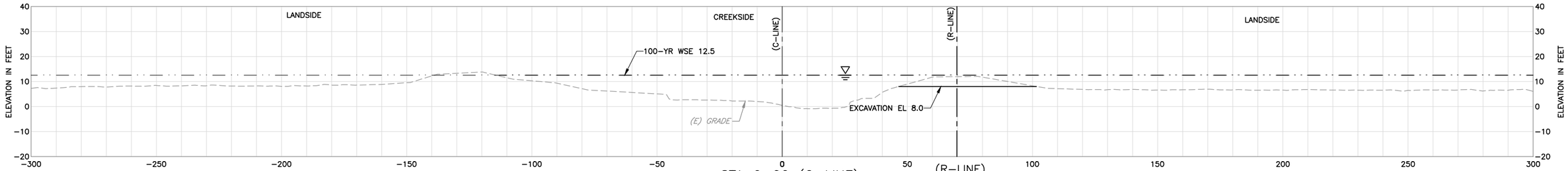

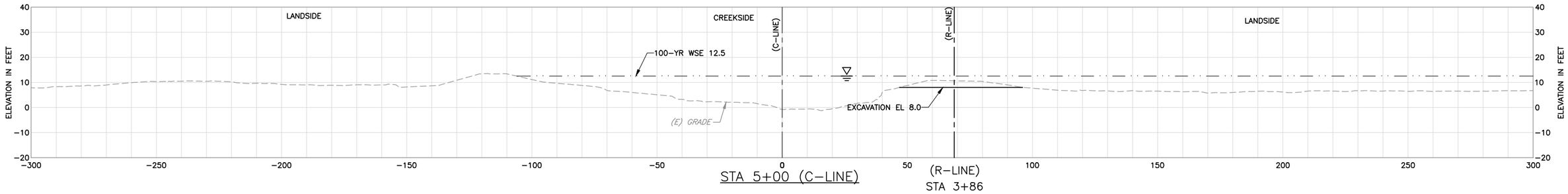

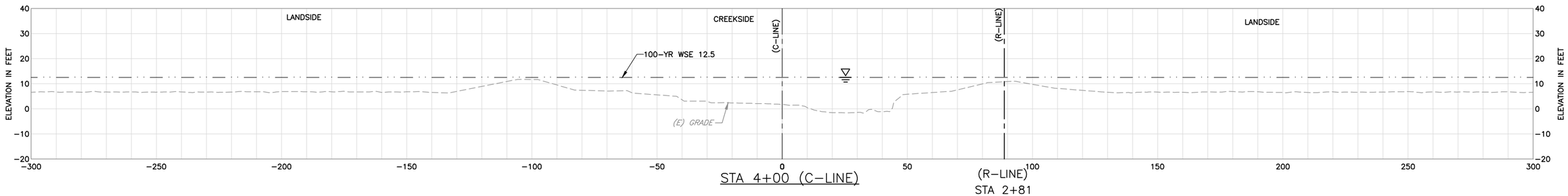

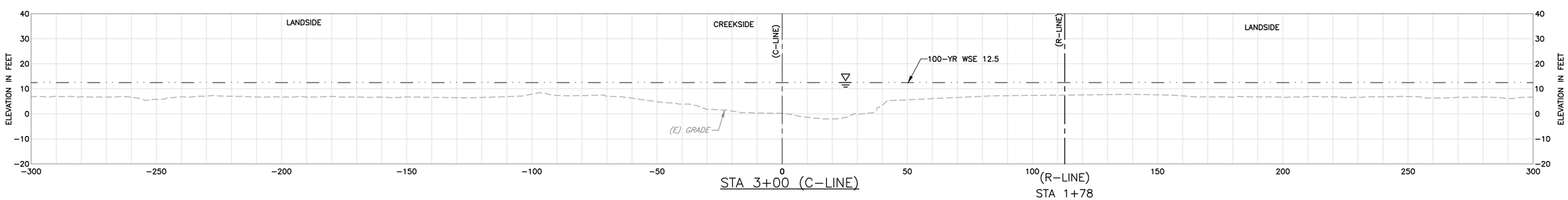

SHEET NOTES:

1 ALL SECTIONS LOOK UP STATION/UPSTREAM.

LEGEND:

EXISTING GRADE

FINISHED GRADE

100–YR WSE

REV	DESCRIPTION	DATE	APPR.
	DRAFT 100% AUGUST 2014		

HDR Engineering, Inc.

DATE JULY 2014
DESIGN L. JONES
DRAWN H. SUAREZ
CHECKED P. HRADILEK

ENGINEERING CERTIFICATION
REGISTERED PROFESSIONAL ENGINEER LANCE M. JONES 68374 Exp. 06-30-15 CIVIL STATE OF CALIFORNIA
PRELIMINARY
PROJECT ENGINEER DATE

SAN FRANCISQUITO CREEK JOINT POWERS AUTHORITY

ACCEPTED BY DISTRICT
PROJECT ENGINEER DATE

PROJECT NAME AND SHEET DESCRIPTION:
SAN FRANCISQUITO CREEK FLOOD REDUCTION, ECOSYSTEM RESTORATION, & RECREATION PROJECT
CROSS SECTIONS – (C–LINE)
STA 3+00 TO 6+00

SCALE H:1" = 20' V:1" = 20'
VERIFY SCALES 0 1"
BAR IS ONE INCH ON ORIGINAL DRAWING IF NOT ONE INCH ON THIS SHEET, ADJUST SCALES ACCORDINGLY

PROJECT NUMBER 26284002
SHEET CODE: X–1
SHEET NUMBER: 64 OF 119

DOCUMENT NUMBER: SFC_LP–C–1028–XXXXXXX

USERNAME: BillShad Tue 08 Jul 2008 09:32am
FILENAME: C:\pwworking\sac\d0171341\X-01

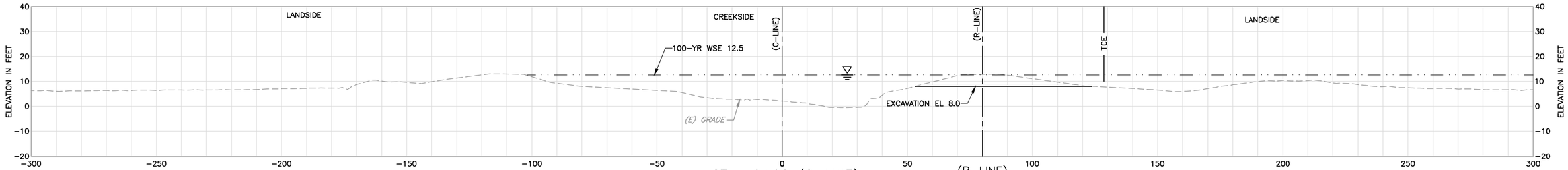

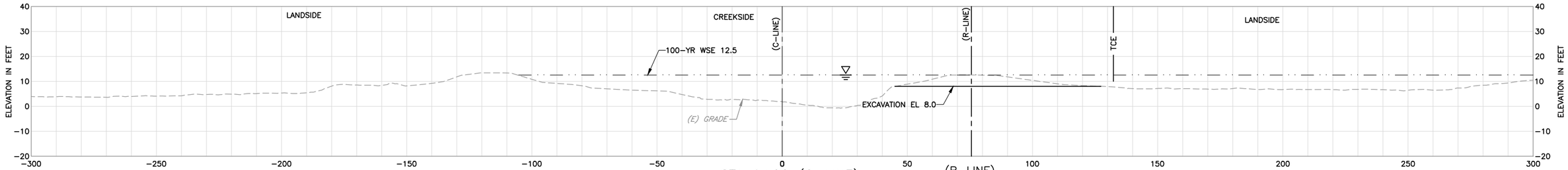

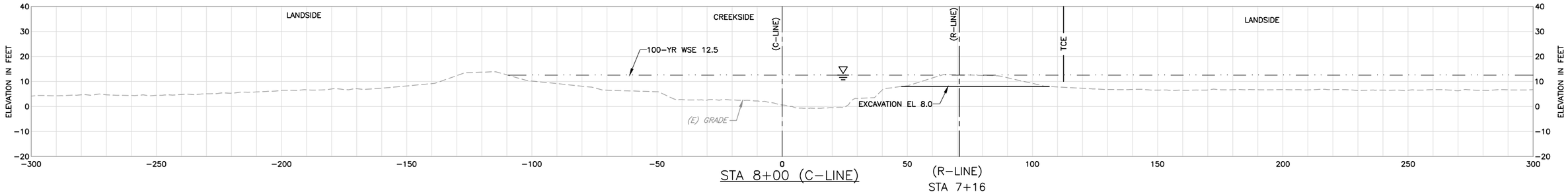

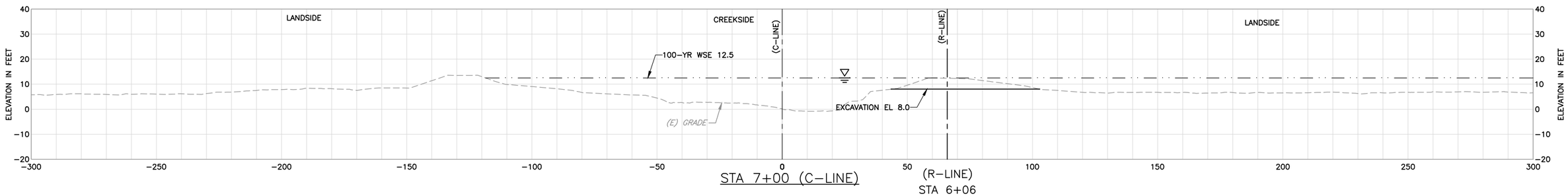

SHEET NOTES:

1 ALL SECTIONS LOOK UP STATION/UPSTREAM.

LEGEND:

EXISTING GRADE

FINISHED GRADE

100-YR WSE

REV	DESCRIPTION	DATE	APPR.
	DRAFT 100% AUGUST 2014		

HDR Engineering, Inc.

DATE: JULY 2014
DESIGN: L. JONES
DRAWN: H. SUAREZ
CHECKED: P. HRADILEK

ENGINEERING CERTIFICATION
REGISTERED PROFESSIONAL ENGINEER LANCE M. JONES 68374 Exp. 06-30-15 CIVIL STATE OF CALIFORNIA
PRELIMINARY
PROJECT ENGINEER DATE

SAN FRANCISQUITO CREEK JOINT POWERS AUTHORITY

ACCEPTED BY DISTRICT
PROJECT ENGINEER DATE

PROJECT NAME AND SHEET DESCRIPTION:
SAN FRANCISQUITO CREEK FLOOD REDUCTION, ECOSYSTEM RESTORATION, & RECREATION PROJECT
CROSS SECTIONS – (C-LINE) STA 7+00 TO 10+00

SCALE H:1" = 20' V:1" = 20'
VERIFY SCALES 0 1"
BAR IS ONE INCH ON ORIGINAL DRAWING IF NOT ONE INCH ON THIS SHEET, ADJUST SCALES ACCORDINGLY

PROJECT NUMBER 26284002
SHEET CODE: X-2
SHEET NUMBER: 65 OF 119

DOCUMENT NUMBER: SFC_LP-C-1028-XXXXXXX

USERNAME: BillShad Tue 08 Jul 2008 09:32am
FILENAME: C:\pwworking\sac\d0171341\X-02

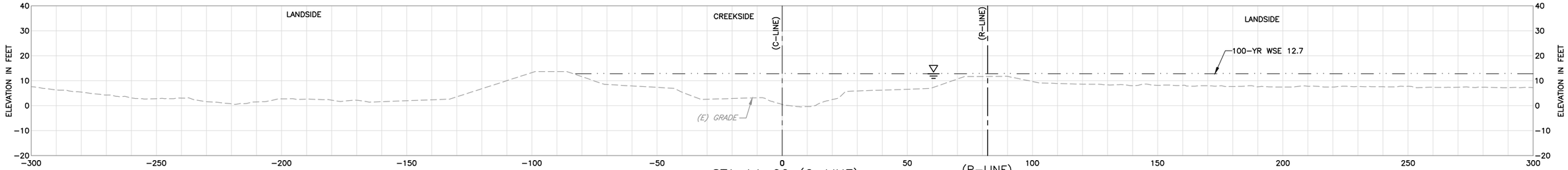

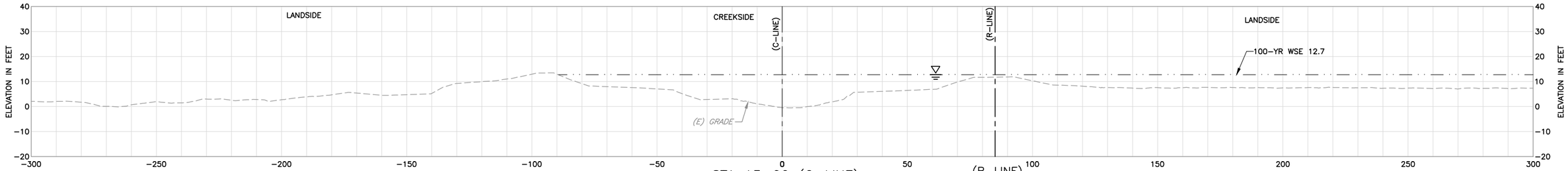

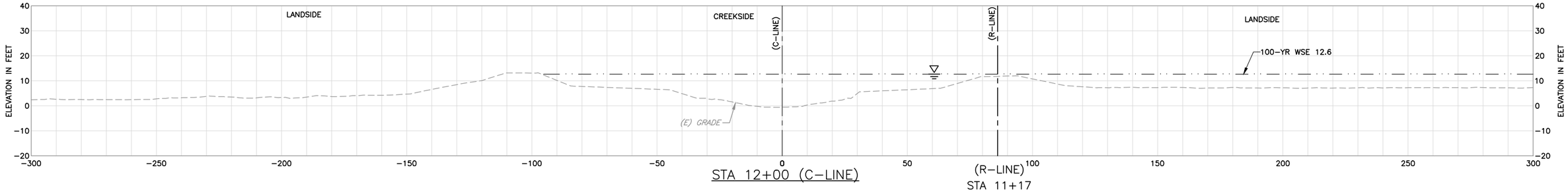

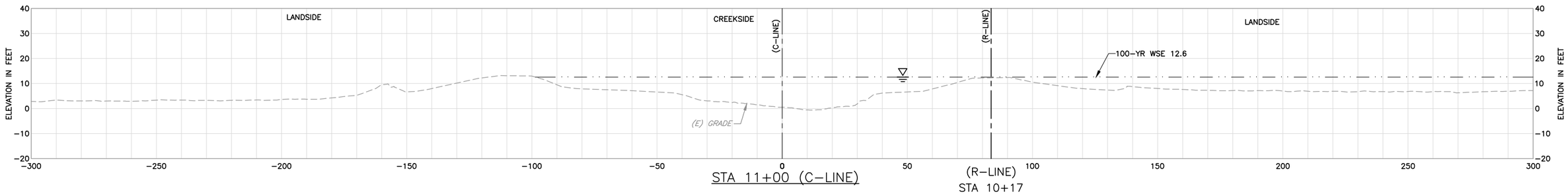

SHEET NOTES:

ALL SECTIONS LOOK UP STATION/UPSTREAM.

LEGEND:

EXISTING GRADE

FINISHED GRADE

100-YR WSE

REV	DESCRIPTION	DATE	APPR.
	DRAFT 100% AUGUST 2014		

HDR Engineering, Inc.

DATE: JULY 2014
DESIGN: L. JONES
DRAWN: H. SUAREZ
CHECKED: P. HRADILEK

ENGINEERING CERTIFICATION

REGISTERED PROFESSIONAL ENGINEER LANCE M. JONES 98374 Exp. 06-30-15 CIVIL STATE OF CALIFORNIA

PRELIMINARY

PROJECT ENGINEER DATE

SAN FRANCISQUITO CREEK JOINT POWERS AUTHORITY

ACCEPTED BY DISTRICT

PROJECT ENGINEER DATE

PROJECT NAME AND SHEET DESCRIPTION:

SAN FRANCISQUITO CREEK FLOOD REDUCTION, ECOSYSTEM RESTORATION, & RECREATION PROJECT

CROSS SECTIONS – (C-LINE) STA 11+00 TO 14+00

SCALE
H:1" = 20'
V:1" = 20'

VERIFY SCALES
0 1"
BAR IS ONE INCH ON ORIGINAL DRAWING IF NOT ONE INCH ON THIS SHEET, ADJUST SCALES ACCORDINGLY

PROJECT NUMBER: 26284002

SHEET CODE: X-3

SHEET NUMBER: 66 OF 119

DOCUMENT NUMBER: SFC_LP-C-1028-XXXXXXX

USERNAME: BillShad Tue 08 Jul 2008 09:32am
FILENAME: C:\pwworking\sac\d0171341\X-03

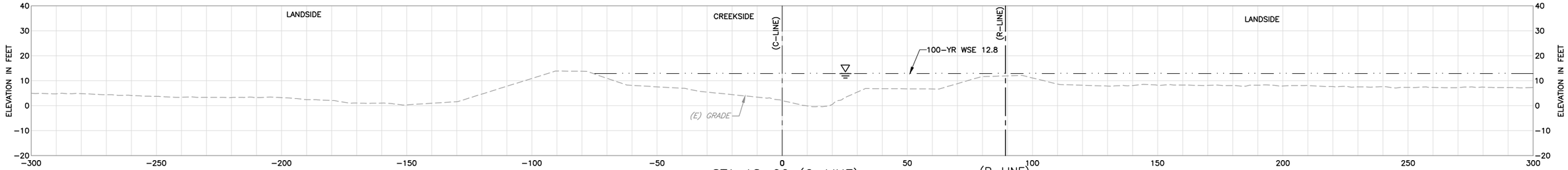

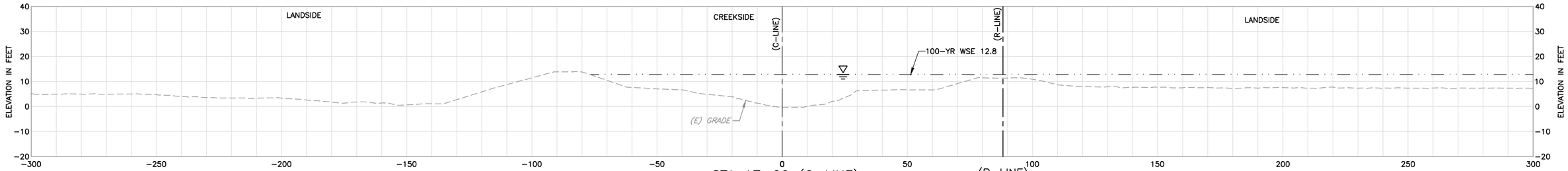

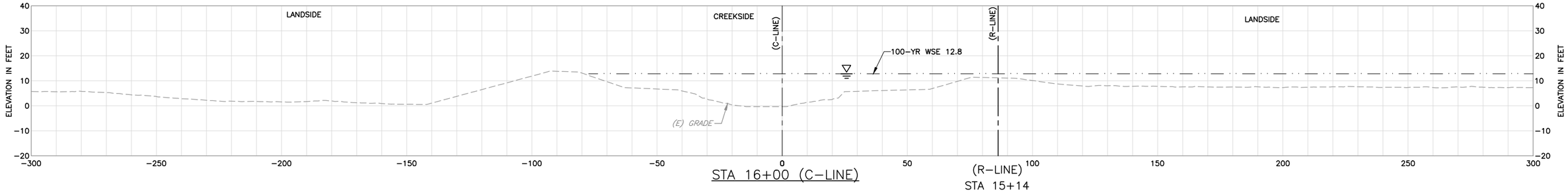

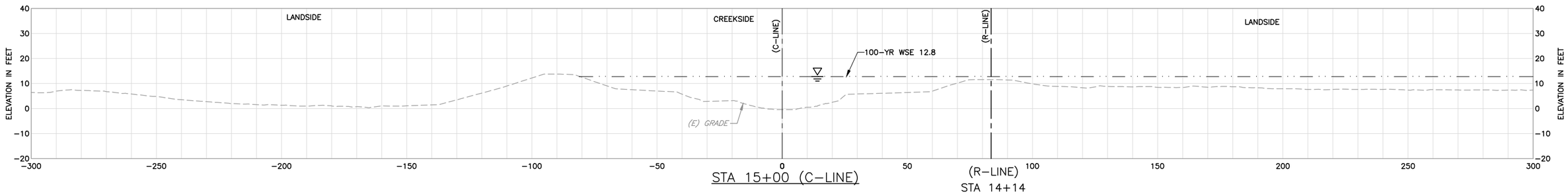

SHEET NOTES:

ALL SECTIONS LOOK UP STATION/UPSTREAM.

LEGEND:

EXISTING GRADE

FINISHED GRADE

100-YR WSE

REV	DESCRIPTION	DATE	APPR.
	DRAFT 100% AUGUST 2014		

HDR Engineering, Inc.

DATE: JULY 2014
DESIGN: L. JONES
DRAWN: H. SUAREZ
CHECKED: P. HRADILEK

ENGINEERING CERTIFICATION
REGISTERED PROFESSIONAL ENGINEER LANCE M. JONES 68374 Exp. 06-30-15 CIVIL STATE OF CALIFORNIA
PRELIMINARY
PROJECT ENGINEER DATE

SAN FRANCISQUITO CREEK JOINT POWERS AUTHORITY

ACCEPTED BY DISTRICT
PROJECT ENGINEER DATE

PROJECT NAME AND SHEET DESCRIPTION:

SAN FRANCISQUITO CREEK FLOOD REDUCTION, ECOSYSTEM RESTORATION, & RECREATION PROJECT

CROSS SECTIONS – (C-LINE) STA 15+00 TO 18+00

SCALE H:1" = 20' V:1" = 20'

VERIFY SCALES 0 1"

BAR IS ONE INCH ON ORIGINAL DRAWING IF NOT ONE INCH ON THIS SHEET, ADJUST SCALES ACCORDINGLY

PROJECT NUMBER 26284002

SHEET CODE: X-4

SHEET NUMBER: 67 OF 119

DOCUMENT NUMBER: SFC_LP-C-1028-XXXXXXX

USERNAME: BillShad Tue 08 Jul 2008 09:32am
FILENAME: C:\pwworking\sac\d0171341\X-04

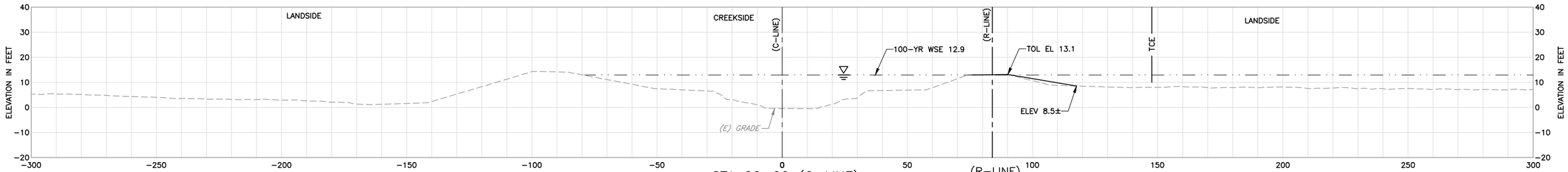

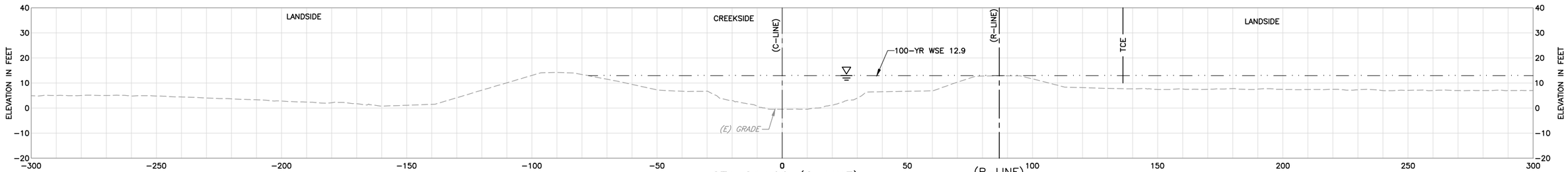

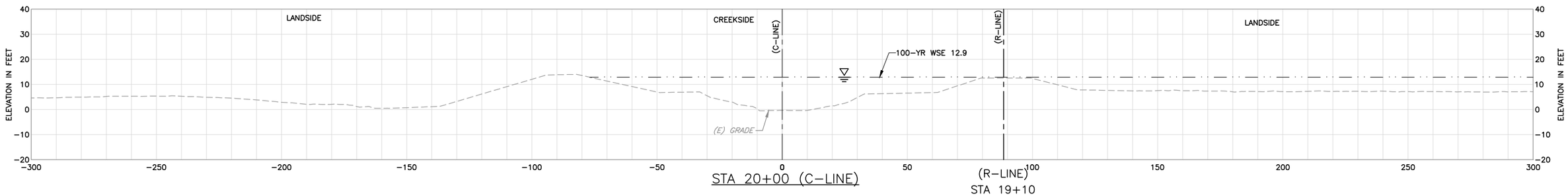

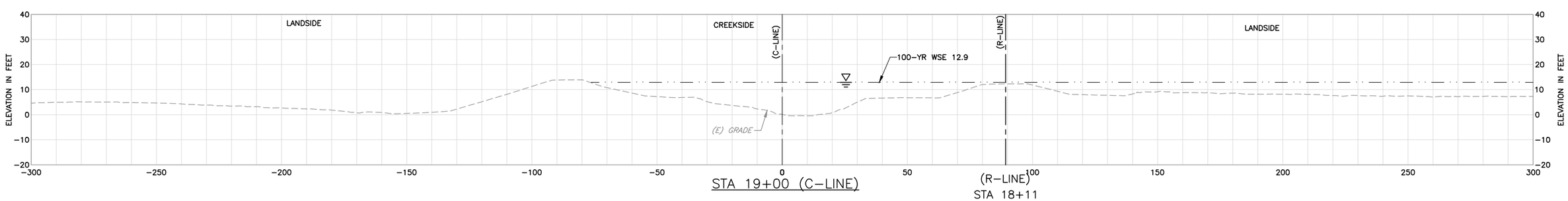

SHEET NOTES:

ALL SECTIONS LOOK UP STATION/UPSTREAM.

LEGEND:

EXISTING GRADE

FINISHED GRADE

100-YR WSE

REV	DESCRIPTION	DATE	APPR.
	DRAFT 100% AUGUST 2014		

HDR Engineering, Inc.

DATE: JULY 2014
DESIGN: L. JONES
DRAWN: H. SUAREZ
CHECKED: P. HRADILEK

ENGINEERING CERTIFICATION

REGISTERED PROFESSIONAL ENGINEER LANCE M. JONES C 68374 Exp. 6-30-15 CIVIL STATE OF CALIFORNIA

PRELIMINARY

PROJECT ENGINEER DATE

SAN FRANCISQUITO CREEK JOINT POWERS AUTHORITY

ACCEPTED BY DISTRICT

PROJECT ENGINEER DATE

PROJECT NAME AND SHEET DESCRIPTION:

SAN FRANCISQUITO CREEK FLOOD REDUCTION, ECOSYSTEM RESTORATION, & RECREATION PROJECT

CROSS SECTIONS – (C-LINE)
STA 19+00 TO 22+00

SCALE H:1" = 20' V:1" = 20'

VERIFY SCALES 0 1"

BAR IS ONE INCH ON ORIGINAL DRAWING IF NOT ONE INCH ON THIS SHEET, ADJUST SCALES ACCORDINGLY

PROJECT NUMBER 26284002

SHEET CODE: X-5

SHEET NUMBER: 68 OF 119

DOCUMENT NUMBER:SFC_LP-C-1028-XXXXXXX

USERNAME: BillShad Tue 08 Jul 2008 09:32am
FILENAME: C:\pwworking\sac\d0171341\X-05

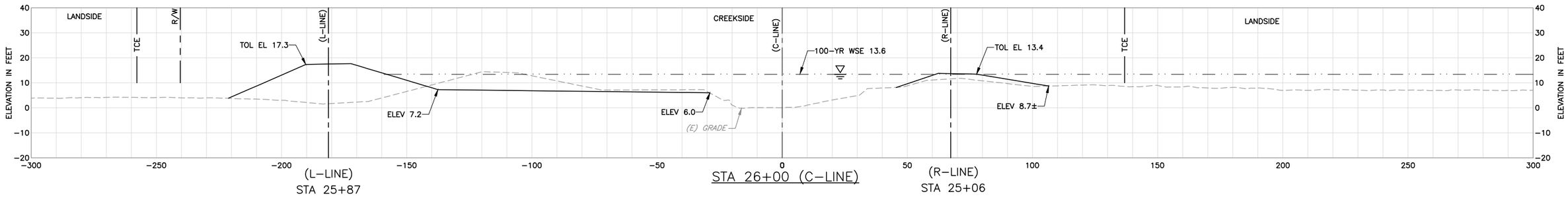

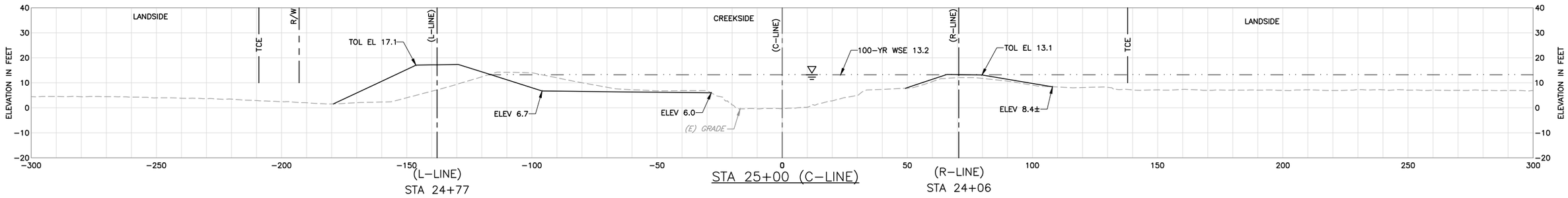

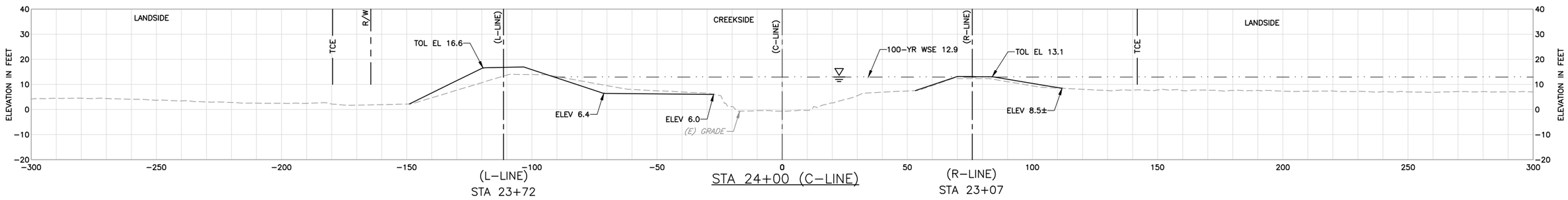

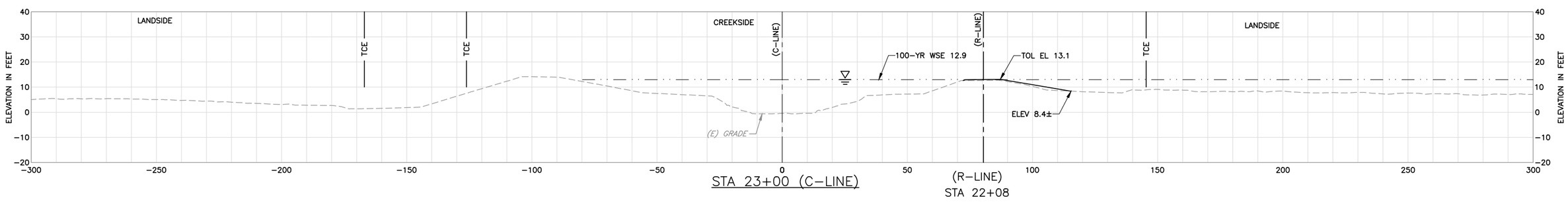

SHEET NOTES:

1 ALL SECTIONS LOOK UP STATION/UPSTREAM.

LEGEND:

EXISTING GRADE

FINISHED GRADE

100-YR WSE

REV	DESCRIPTION	DATE	APPR.
	DRAFT 100% AUGUST 2014		

HDR Engineering, Inc.

DATE JULY 2014
DESIGN L. JONES
DRAWN H. SUAREZ
CHECKED P. HRADILEK

ENGINEERING CERTIFICATION
REGISTERED PROFESSIONAL ENGINEER LANCE M. JONES 6934 Exp. 30-15 CIVIL STATE OF CALIFORNIA
PRELIMINARY
PROJECT ENGINEER DATE

SAN FRANCISQUITO CREEK JOINT POWERS AUTHORITY
ACCEPTED BY DISTRICT
PROJECT ENGINEER DATE

PROJECT NAME AND SHEET DESCRIPTION:
SAN FRANCISQUITO CREEK FLOOD REDUCTION, ECOSYSTEM RESTORATION, & RECREATION PROJECT
CROSS SECTIONS – (C-LINE)
STA 23+00 TO 26+00

SCALE H:1" = 20' V:1" = 20'
VERIFY SCALES 0 1"
BAR IS ONE INCH ON ORIGINAL DRAWING IF NOT ONE INCH ON THIS SHEET, ADJUST SCALES ACCORDINGLY

PROJECT NUMBER 26284002
SHEET CODE: X-6
SHEET NUMBER: 69 OF 119

DOCUMENT NUMBER: SFC_LP-C-1028-XXXXXXX

USERNAME: BHISHAD Tue 08 Jul 2008 09:32am
FILENAME: C:\pwworking\sac\d0171341\X-06

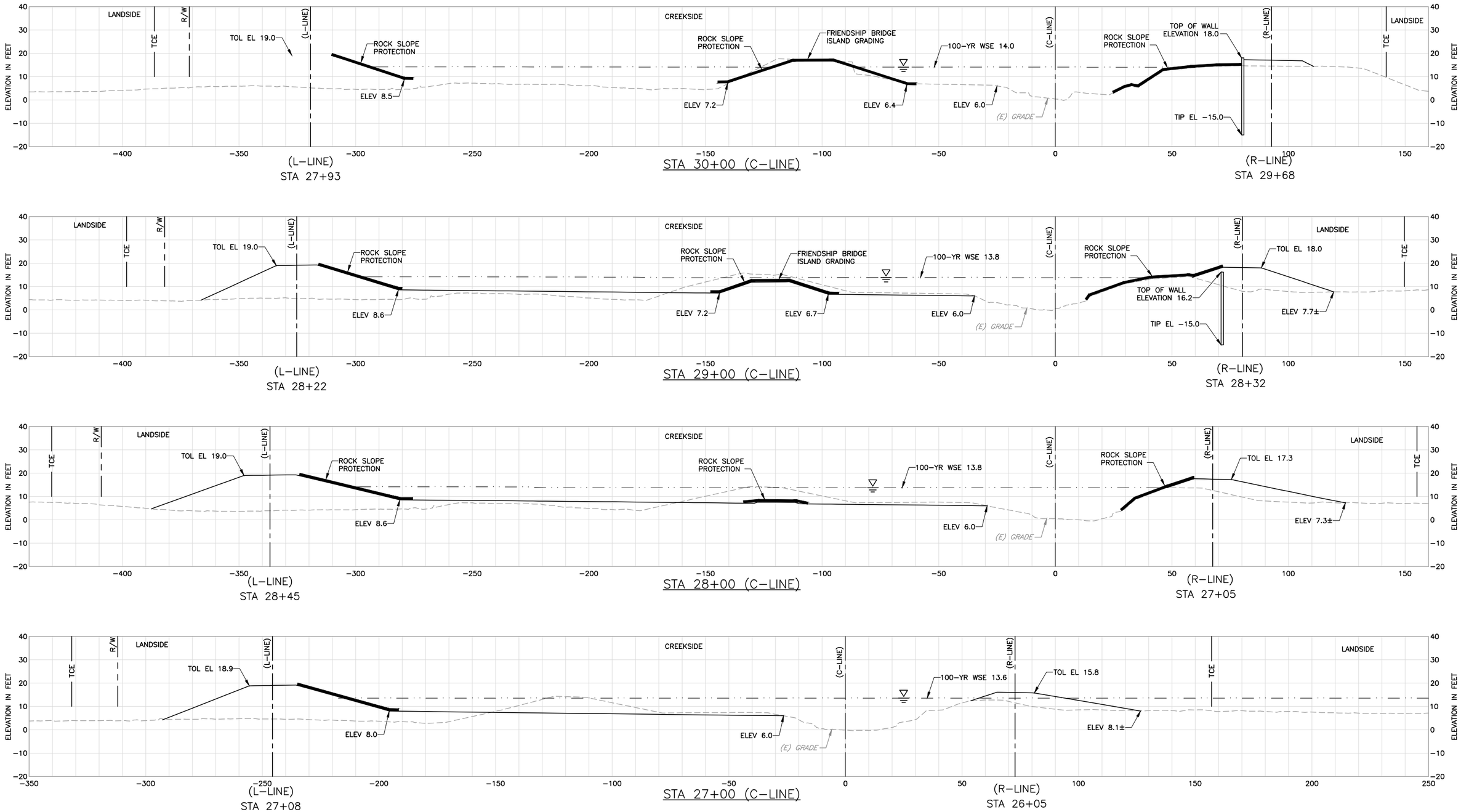

SHEET NOTES:

1 ALL SECTIONS LOOK UP STATION/UPSTREAM.

LEGEND:

EXISTING GRADE

FINISHED GRADE

100-YR WSE

REV	DESCRIPTION	DATE	APPR.
	DRAFT 100% AUGUST 2014		

HDR Engineering, Inc.

DATE JULY 2014
DESIGN L. JONES
DRAWN H. SUAREZ
CHECKED P. HRADILEK

ENGINEERING CERTIFICATION
REGISTERED PROFESSIONAL ENGINEER LANCE M. JONES 68374 Exp. 9-30-15 CIVIL STATE OF CALIFORNIA
PRELIMINARY
PROJECT ENGINEER DATE

SAN FRANCISQUITO CREEK JOINT POWERS AUTHORITY

ACCEPTED BY DISTRICT
PROJECT ENGINEER DATE

PROJECT NAME AND SHEET DESCRIPTION:
SAN FRANCISQUITO CREEK FLOOD REDUCTION, ECOSYSTEM RESTORATION, & RECREATION PROJECT
CROSS SECTIONS – (C-LINE)
STA 27+00 TO 30+00

SCALE H:1" = 20' V:1" = 20'
VERIFY SCALES 0 1"
BAR IS ONE INCH ON ORIGINAL DRAWING IF NOT ONE INCH ON THIS SHEET, ADJUST SCALES ACCORDINGLY

PROJECT NUMBER 26284002
SHEET CODE: X-7
SHEET NUMBER: 70 OF 119

DOCUMENT NUMBER: SFC_LP-C-1028-XXXXXXX

USERNAME: BillShad Tue 08 Jul 2008 09:32am
FILENAME: C:\pwworking\sac\d0171341\X-07

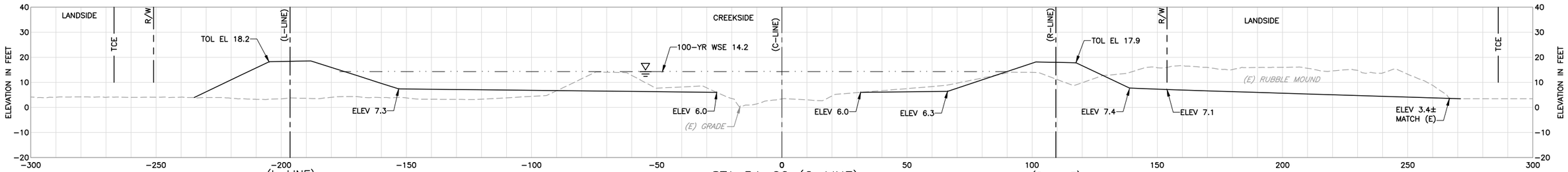

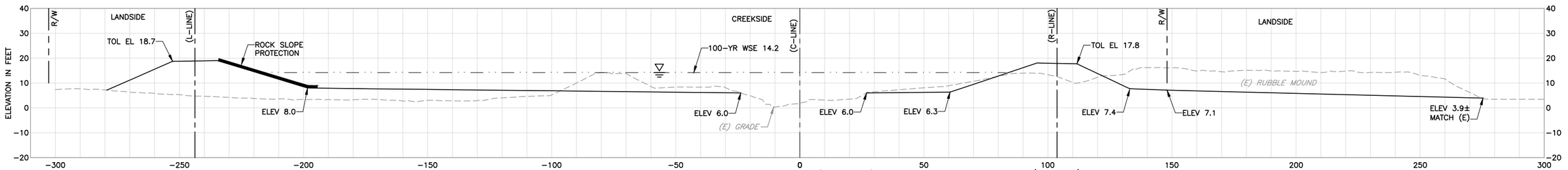

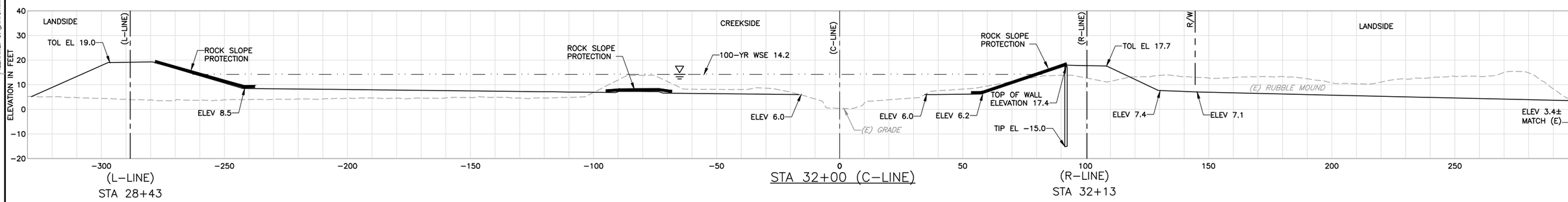

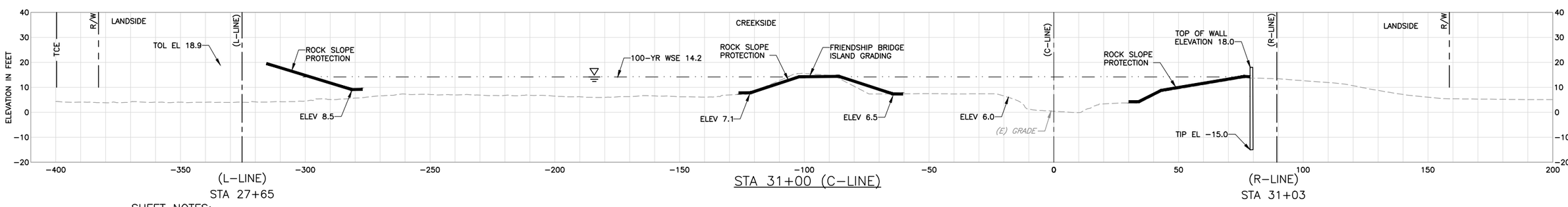

SHEET NOTES:

1 ALL SECTIONS LOOK UP STATION/UPSTREAM.

LEGEND:

EXISTING GRADE

FINISHED GRADE

100-YR WSE

REV	DESCRIPTION	DATE	APPR.
	DRAFT 100% AUGUST 2014		

HDR Engineering, Inc.

DATE: JULY 2014
DESIGN: L. JONES
DRAWN: H. SUAREZ
CHECKED: P. HRADILEK

ENGINEERING CERTIFICATION
REGISTERED PROFESSIONAL ENGINEER LANCE M. JONES C8074 Exp. 6-30-15 CIVIL STATE OF CALIFORNIA
PRELIMINARY
PROJECT ENGINEER DATE

SAN FRANCISQUITO CREEK JOINT POWERS AUTHORITY

ACCEPTED BY DISTRICT

PROJECT ENGINEER DATE

PROJECT NAME AND SHEET DESCRIPTION:

SAN FRANCISQUITO CREEK FLOOD REDUCTION, ECOSYSTEM RESTORATION, & RECREATION PROJECT

CROSS SECTIONS – (C-LINE) STA 31+00 TO 34+00

SCALE H:1" = 20' V:1" = 20'

VERIFY SCALES 0 1"

BAR IS ONE INCH ON ORIGINAL DRAWING IF NOT ONE INCH ON THIS SHEET, ADJUST SCALES ACCORDINGLY

PROJECT NUMBER 26284002

SHEET CODE: X-8

SHEET NUMBER: 71 OF 119

DOCUMENT NUMBER:SFC_LP-C-1028-XXXXXXX

USERNAME: BillShad Tue 08 Jul 2008 09:32am
FILENAME: C:\pwworking\sac\d0171341\X-08

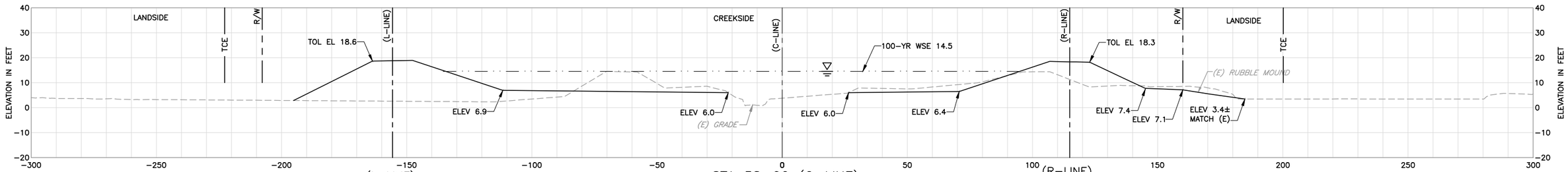

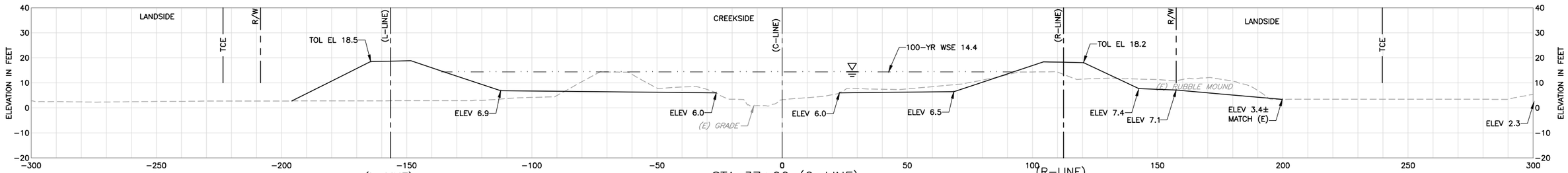

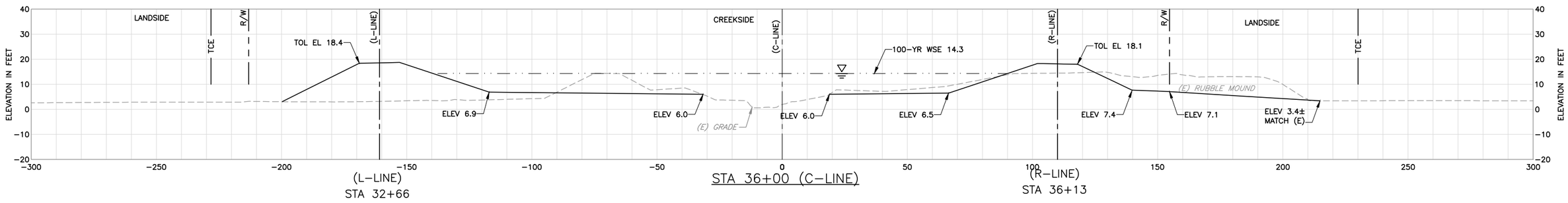

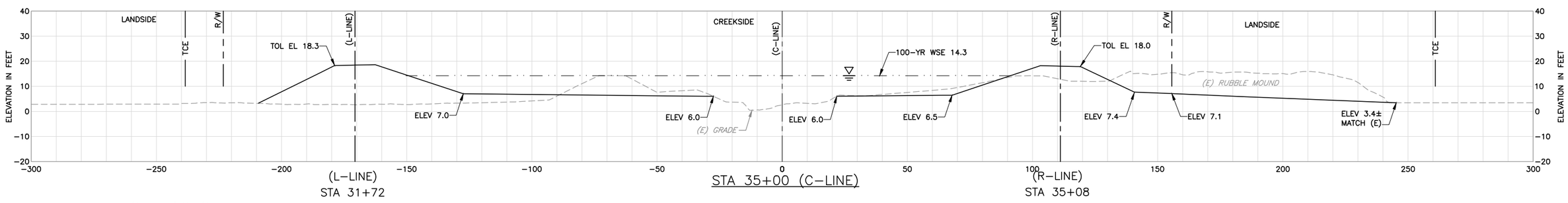

SHEET NOTES:

1 ALL SECTIONS LOOK UP STATION/UPSTREAM.

LEGEND:

EXISTING GRADE

FINISHED GRADE

100-YR WSE

REV	DESCRIPTION	DATE	APPR.
	DRAFT 100% AUGUST 2014		

HDR Engineering, Inc.

DATE JULY 2014
DESIGN L. JONES
DRAWN H. SUAREZ
CHECKED P. HRADILEK

ENGINEERING CERTIFICATION
REGISTERED PROFESSIONAL ENGINEER LANCE M. JONES 68342 Exp. 06-30-15 CIVIL STATE OF CALIFORNIA
PRELIMINARY
PROJECT ENGINEER DATE

SAN FRANCISQUITO CREEK JOINT POWERS AUTHORITY

ACCEPTED BY DISTRICT

PROJECT ENGINEER DATE

PROJECT NAME AND SHEET DESCRIPTION:
SAN FRANCISQUITO CREEK FLOOD REDUCTION, ECOSYSTEM RESTORATION, & RECREATION PROJECT
CROSS SECTIONS – (C-LINE)
STA 35+00 TO 38+00

SCALE H:1" = 20' V:1" = 20'
VERIFY SCALES 0 1"
BAR IS ONE INCH ON ORIGINAL DRAWING IF NOT ONE INCH ON THIS SHEET, ADJUST SCALES ACCORDINGLY

PROJECT NUMBER 26284002
SHEET CODE: X-9
SHEET NUMBER: 72 OF 119

DOCUMENT NUMBER: SFC_LP-C-1028-XXXXXXX

USERNAME: BillShad Tue 08 Jul 2008 09:32am
FILENAME: C:\pwworking\sac\d0171341\X-09

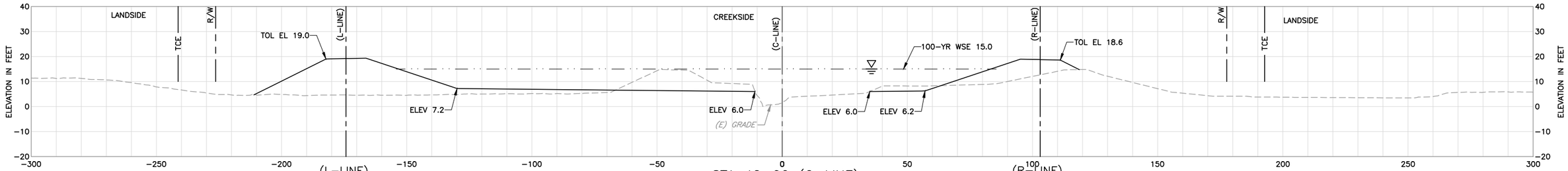

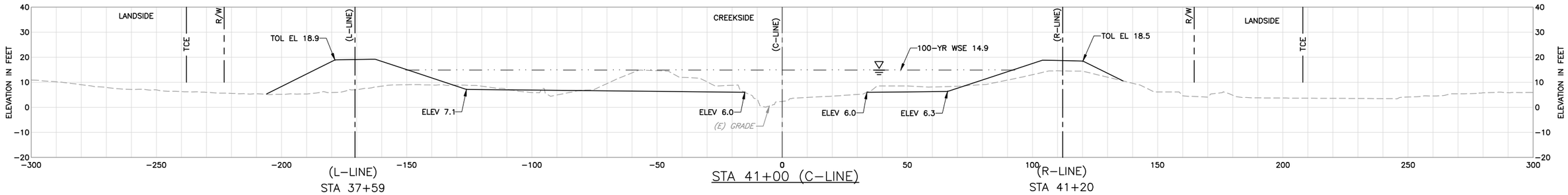

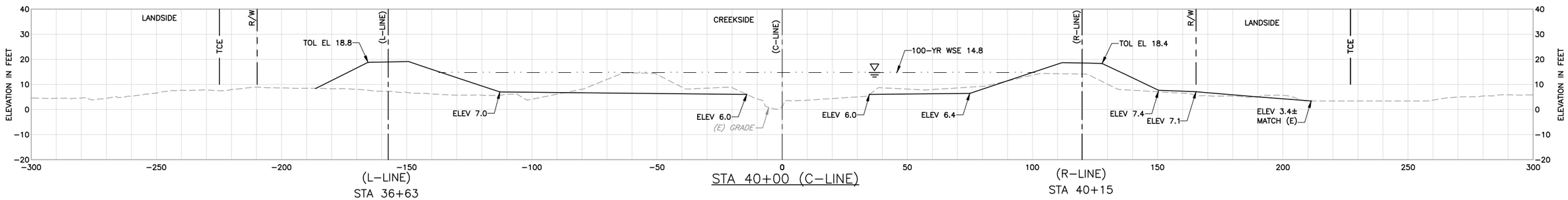

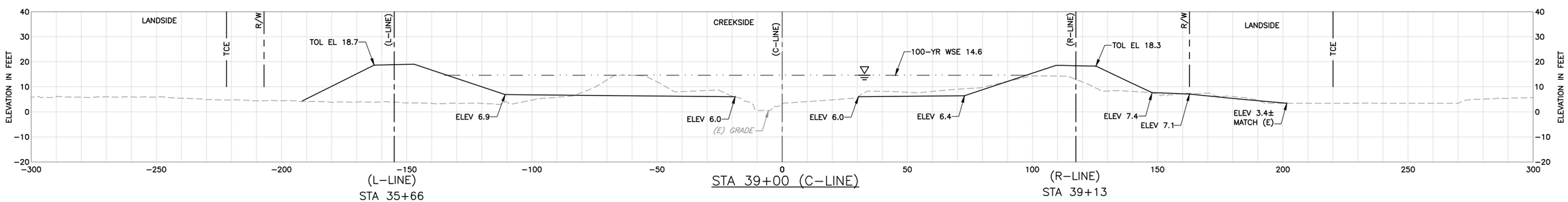

SHEET NOTES:

1 ALL SECTIONS LOOK UP STATION/UPSTREAM.

LEGEND:

EXISTING GRADE

FINISHED GRADE

100-YR WSE

REV	DESCRIPTION	DATE	APPR.
	DRAFT 100% AUGUST 2014		

HDR Engineering, Inc.

DATE JULY 2014
DESIGN L. JONES
DRAWN H. SUAREZ
CHECKED P. HRADILEK

ENGINEERING CERTIFICATION
REGISTERED PROFESSIONAL ENGINEER LANCE M. JONES 68342 Exp. 06-30-15 CIVIL STATE OF CALIFORNIA
PRELIMINARY
PROJECT ENGINEER DATE

SAN FRANCISQUITO CREEK JOINT POWERS AUTHORITY
ACCEPTED BY DISTRICT
PROJECT ENGINEER DATE

PROJECT NAME AND SHEET DESCRIPTION:
SAN FRANCISQUITO CREEK FLOOD REDUCTION, ECOSYSTEM RESTORATION, & RECREATION PROJECT
CROSS SECTIONS – (C-LINE)
STA 39+00 TO 42+00

SCALE H:1" = 20' V:1" = 20'
VERIFY SCALES 0 1"
BAR IS ONE INCH ON ORIGINAL DRAWING IF NOT ONE INCH ON THIS SHEET, ADJUST SCALES ACCORDINGLY

PROJECT NUMBER 26284002
SHEET CODE: X-10
SHEET NUMBER: 73 OF 119

DOCUMENT NUMBER: SFC_LP-C-1028-XXXXXXX

USERNAME: BillShad Tue 08 Jul 2008 09:32am
FILENAME: C:\pwworking\sac\d0171341\X-10

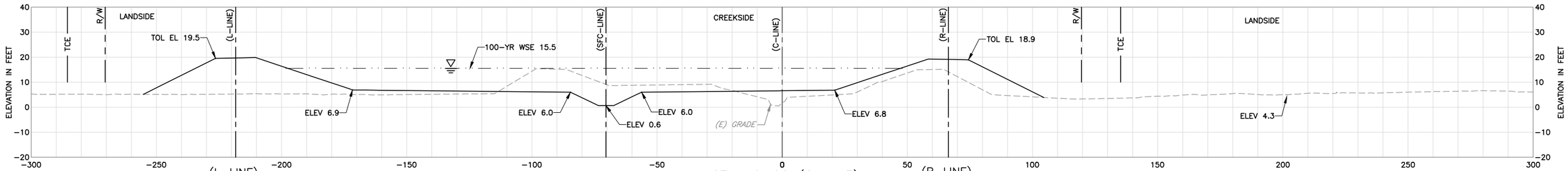

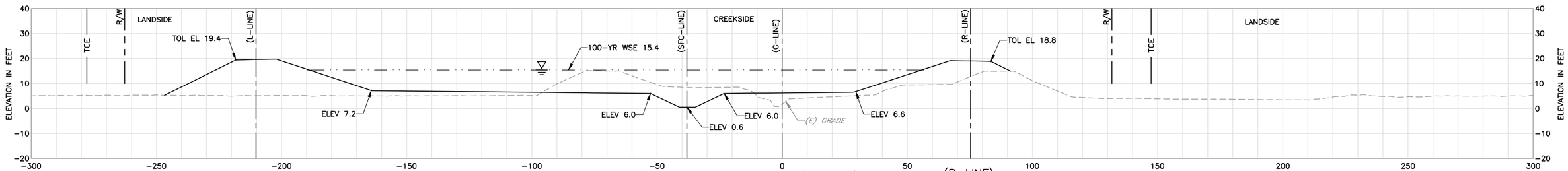

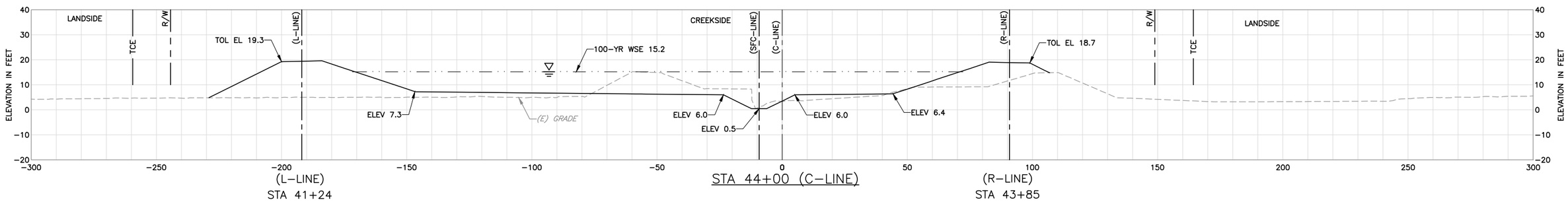

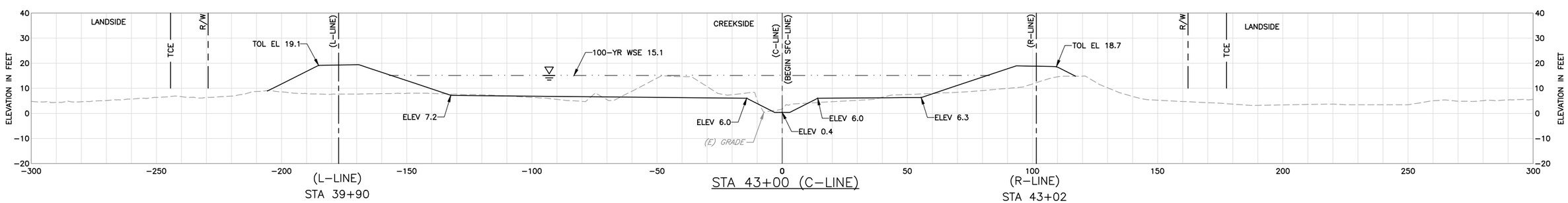

SHEET NOTES:

1 ALL SECTIONS LOOK UP STATION/UPSTREAM.

LEGEND:

EXISTING GRADE

FINISHED GRADE

100-YR WSE

REV	DESCRIPTION	DATE	APPR.
	DRAFT 100% AUGUST 2014		

HDR Engineering, Inc.

DATE: JULY 2014
DESIGN: L. JONES
DRAWN: H. SUAREZ
CHECKED: P. HRADILEK

ENGINEERING CERTIFICATION
REGISTERED PROFESSIONAL ENGINEER LANCE M. JONES 68074 Exp. 6-30-15 CIVIL STATE OF CALIFORNIA
PRELIMINARY
PROJECT ENGINEER DATE

SAN FRANCISQUITO CREEK JOINT POWERS AUTHORITY

ACCEPTED BY DISTRICT

PROJECT ENGINEER DATE

PROJECT NAME AND SHEET DESCRIPTION:

SAN FRANCISQUITO CREEK FLOOD REDUCTION, ECOSYSTEM RESTORATION, & RECREATION PROJECT

CROSS SECTIONS – (C-LINE) STA 43+00 TO 46+00

SCALE H:1" = 20' V:1" = 20'

VERIFY SCALES 0 1"

BAR IS ONE INCH ON ORIGINAL DRAWING IF NOT ONE INCH ON THIS SHEET, ADJUST SCALES ACCORDINGLY

PROJECT NUMBER 26284002

SHEET CODE: X-11

SHEET NUMBER: 74 OF 119

DOCUMENT NUMBER:SFC_LP-C-1028-XXXXXXX

USERNAME: BillShad Tue 08 Jul 2008 09:32am
FILENAME: C:\pwworking\sac\d0171341\X-11

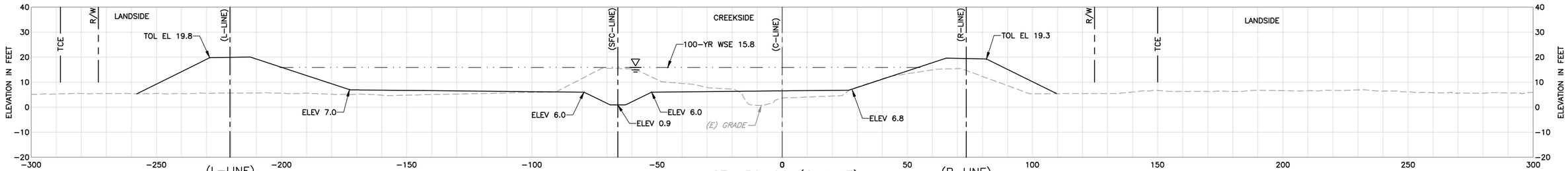

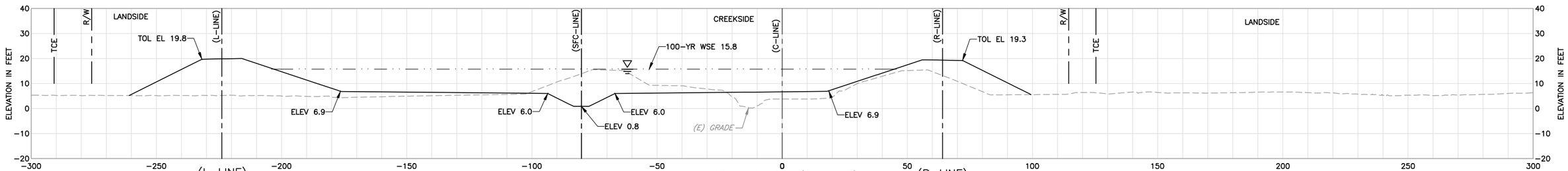

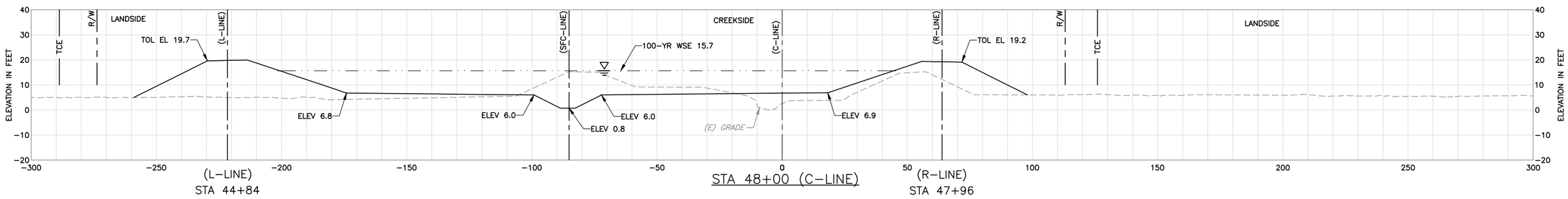

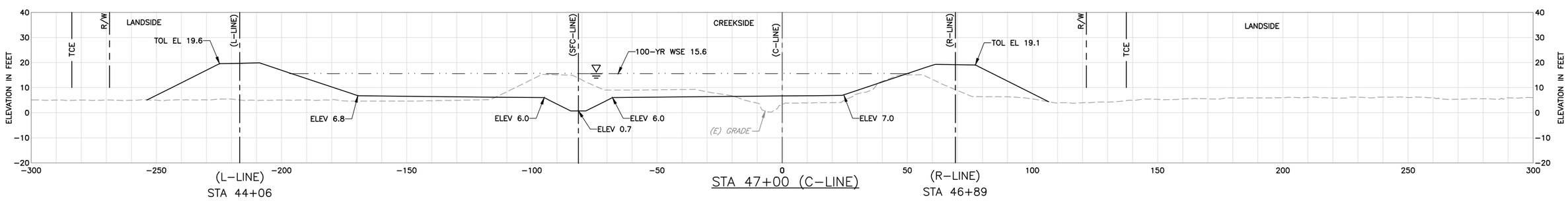

SHEET NOTES:

1 ALL SECTIONS LOOK UP STATION/UPSTREAM.

LEGEND:

EXISTING GRADE

FINISHED GRADE

100-YR WSE

REV	DESCRIPTION	DATE	APPR.
	DRAFT 100% AUGUST 2014		

HDR Engineering, Inc.

DATE	JULY 2014
DESIGN	L. JONES
DRAWN	H. SUAREZ
CHECKED	P. HRADILEK

ENGINEERING CERTIFICATION

REGISTERED PROFESSIONAL ENGINEER LANCE M. JONES 68074 Exp. 6-30-15 CIVIL STATE OF CALIFORNIA

PRELIMINARY

PROJECT ENGINEER DATE

SAN FRANCISQUITO CREEK JOINT POWERS AUTHORITY

ACCEPTED BY DISTRICT

PROJECT ENGINEER DATE

PROJECT NAME AND SHEET DESCRIPTION:

SAN FRANCISQUITO CREEK FLOOD REDUCTION, ECOSYSTEM RESTORATION, & RECREATION PROJECT

CROSS SECTIONS – (C-LINE)
STA 47+00 TO 50+00

SCALE H:1" = 20' V:1" = 20'

VERIFY SCALES 0 1"

BAR IS ONE INCH ON ORIGINAL DRAWING IF NOT ONE INCH ON THIS SHEET, ADJUST SCALES ACCORDINGLY

PROJECT NUMBER 26284002

SHEET CODE: X-12

SHEET NUMBER: 75 OF 119

DOCUMENT NUMBER:SFC_LP-C-1028-XXXXXXX

USERNAME: BillShad Tue 08 Jul 2008 09:32am
FILENAME: C:\pwworking\sac\d0171341\X-12

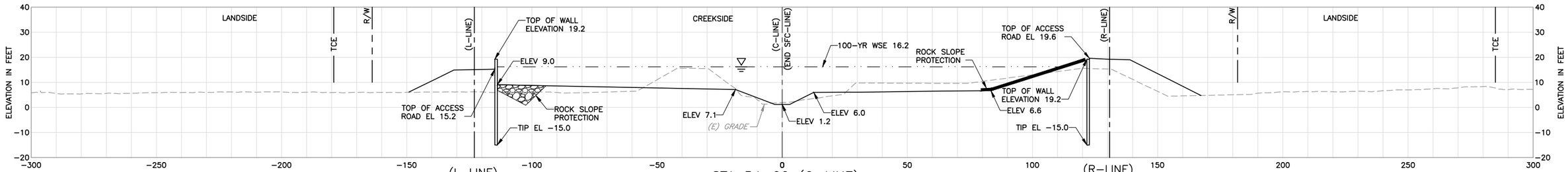

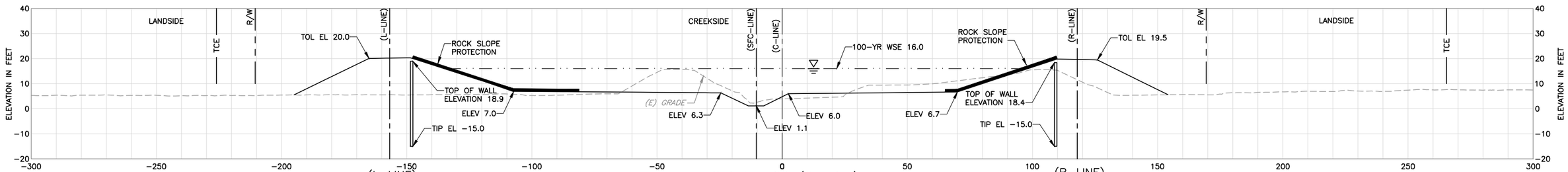

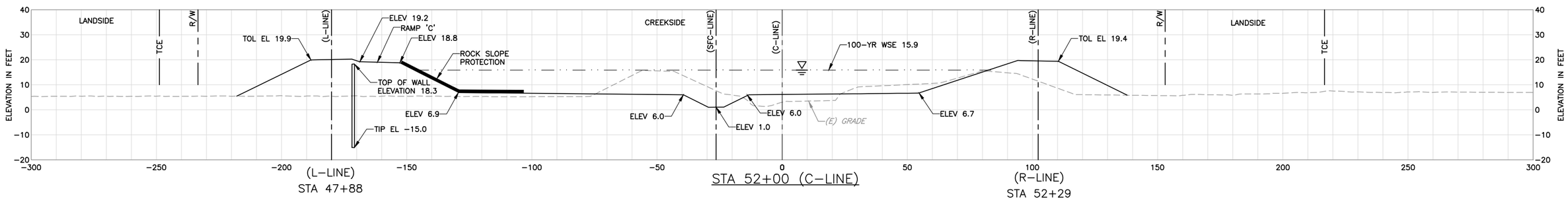

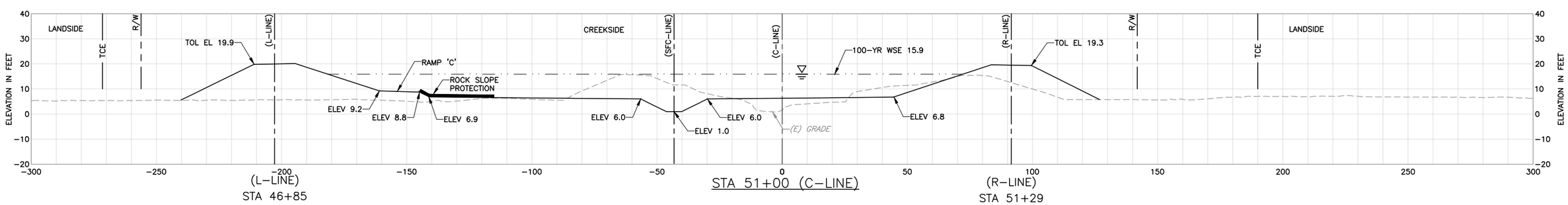

SHEET NOTES:

1 ALL SECTIONS LOOK UP STATION/UPSTREAM.

LEGEND:

EXISTING GRADE

FINISHED GRADE

100-YR WSE

REV	DESCRIPTION	DATE	APPR.
	DRAFT 100% AUGUST 2014		

HDR Engineering, Inc.

DATE: JULY 2014
DESIGN: L. JONES
DRAWN: H. SUAREZ
CHECKED: P. HRADILEK

ENGINEERING CERTIFICATION
REGISTERED PROFESSIONAL ENGINEER LANCE M. JONES 66374 Exp. 9-30-15 CIVIL STATE OF CALIFORNIA
PRELIMINARY
PROJECT ENGINEER DATE

SAN FRANCISQUITO CREEK JOINT POWERS AUTHORITY

ACCEPTED BY DISTRICT
PROJECT ENGINEER DATE

PROJECT NAME AND SHEET DESCRIPTION:
SAN FRANCISQUITO CREEK FLOOD REDUCTION, ECOSYSTEM RESTORATION, & RECREATION PROJECT
CROSS SECTIONS – (C-LINE) STA 51+00 TO 54+00

SCALE H:1" = 20' V:1" = 20'
VERIFY SCALES 0 1"
BAR IS ONE INCH ON ORIGINAL DRAWING IF NOT ONE INCH ON THIS SHEET, ADJUST SCALES ACCORDINGLY

PROJECT NUMBER 26284002
SHEET CODE: X-13
SHEET NUMBER: 76 OF 119

DOCUMENT NUMBER: SFC_LP-C-1028-XXXXXXX

USERNAME: BillShad Tue 08 Jul 2008 09:32am
FILENAME: C:\pwworking\sac\d0171341\X-13

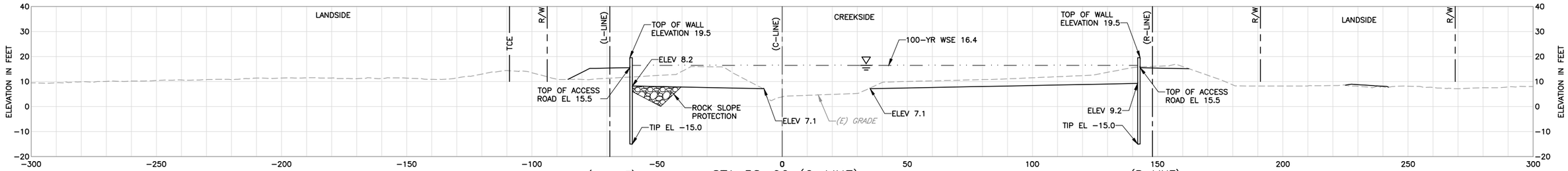

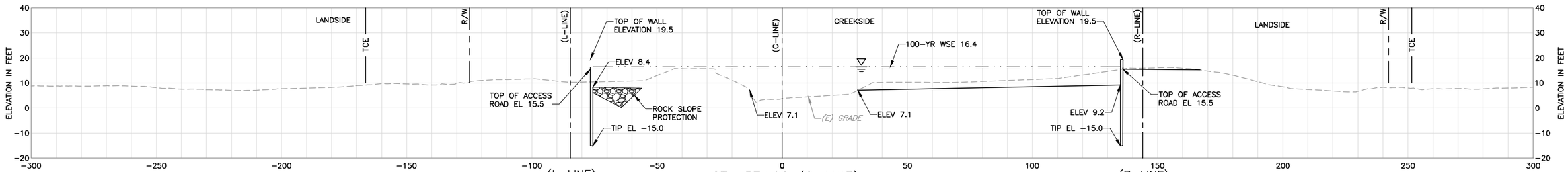

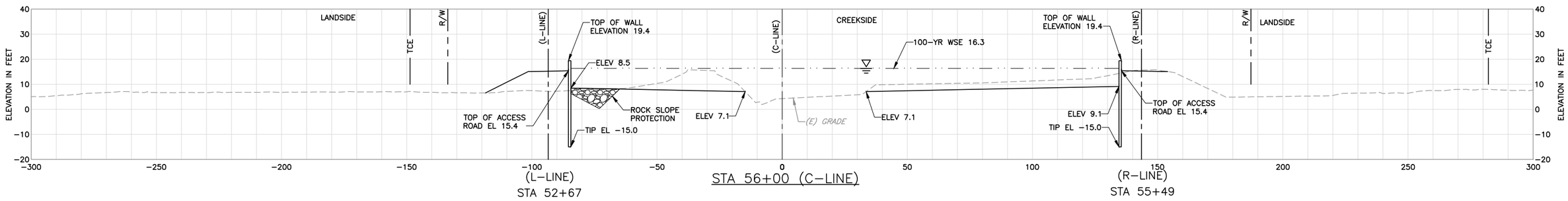

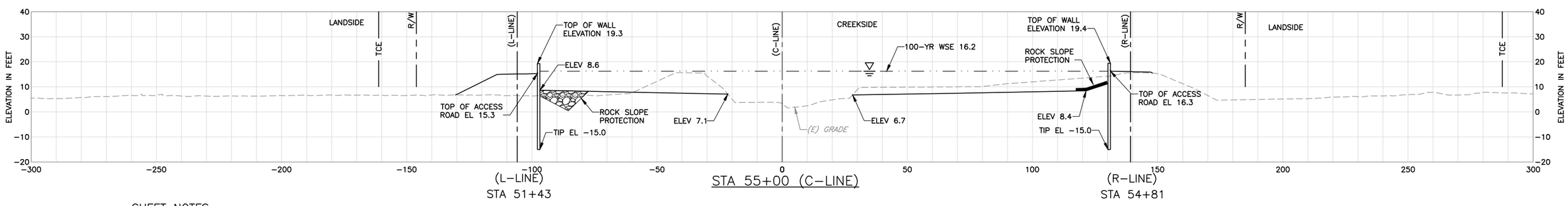

SHEET NOTES:

1 ALL SECTIONS LOOK UP STATION/UPSTREAM.

LEGEND:

EXISTING GRADE

FINISHED GRADE

100-YR WSE

REV	DESCRIPTION	DATE	APPR.
	DRAFT 100% AUGUST 2014		

HDR Engineering, Inc.

DATE JULY 2014
DESIGN L. JONES
DRAWN H. SUAREZ
CHECKED P. HRADILEK

ENGINEERING CERTIFICATION
REGISTERED PROFESSIONAL ENGINEER LANCE M. JONES 68342 Exp. 06-30-15 CIVIL STATE OF CALIFORNIA
PRELIMINARY
PROJECT ENGINEER DATE

SAN FRANCISQUITO CREEK JOINT POWERS AUTHORITY
ACCEPTED BY DISTRICT
PROJECT ENGINEER DATE

PROJECT NAME AND SHEET DESCRIPTION:
SAN FRANCISQUITO CREEK FLOOD REDUCTION, ECOSYSTEM RESTORATION, & RECREATION PROJECT
CROSS SECTIONS – (C-LINE) STA 55+00 TO 58+00

SCALE H:1" = 20' V:1" = 20'
VERIFY SCALES 0 1"
BAR IS ONE INCH ON ORIGINAL DRAWING IF NOT ONE INCH ON THIS SHEET, ADJUST SCALES ACCORDINGLY

PROJECT NUMBER 26284002
SHEET CODE: X-14
SHEET NUMBER: 77 OF 119

DOCUMENT NUMBER: SFC_LP-C-1028-XXXXXXX

USERNAME: BHISHAD FILENAME: C:\pwworking\sac\d0171341\X-14 Tue 08 Jul 2008 09:32am

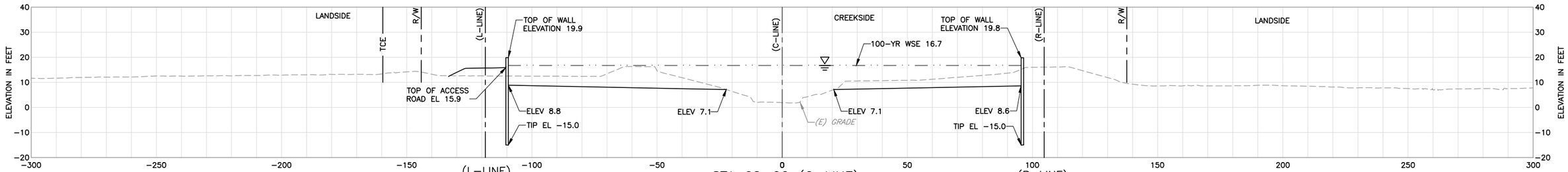

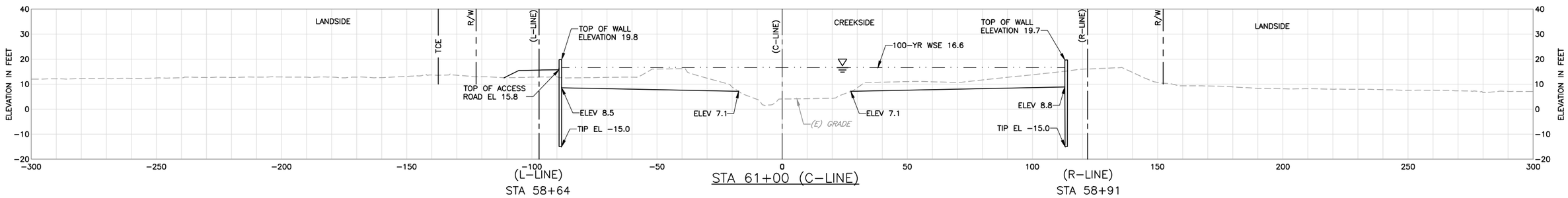

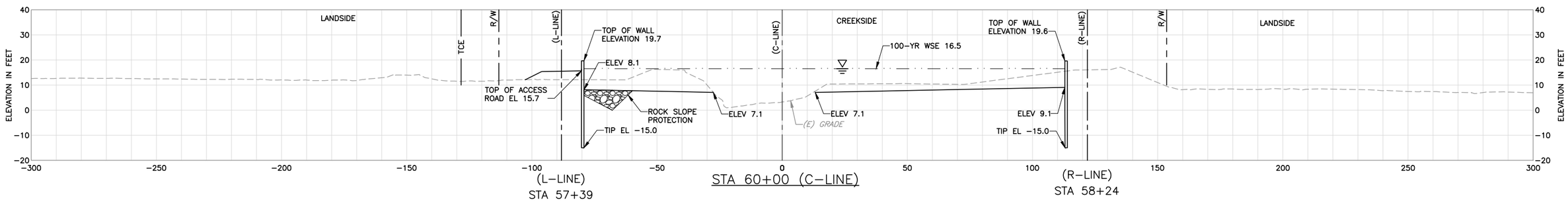

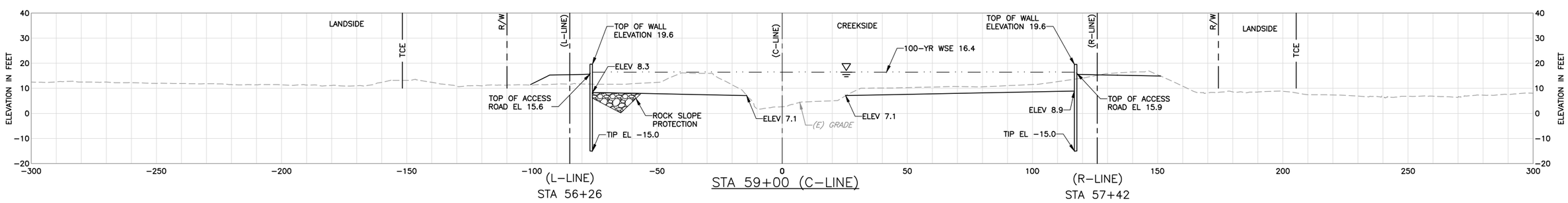

SHEET NOTES:

1 ALL SECTIONS LOOK UP STATION/UPSTREAM.

LEGEND:

EXISTING GRADE

FINISHED GRADE

100-YR WSE

REV	DESCRIPTION	DATE	APPR.
	DRAFT 100% AUGUST 2014		

HDR Engineering, Inc.

DATE JULY 2014
DESIGN L. JONES
DRAWN H. SUAREZ
CHECKED P. HRADILEK

ENGINEERING CERTIFICATION
REGISTERED PROFESSIONAL ENGINEER LANCE M. JONES 063742 EXP. 09-30-15 CIVIL STATE OF CALIFORNIA
PRELIMINARY
PROJECT ENGINEER DATE

SAN FRANCISQUITO CREEK JOINT POWERS AUTHORITY

ACCEPTED BY DISTRICT
PROJECT ENGINEER DATE

PROJECT NAME AND SHEET DESCRIPTION:
SAN FRANCISQUITO CREEK FLOOD REDUCTION, ECOSYSTEM RESTORATION, & RECREATION PROJECT
CROSS SECTIONS – (C-LINE) STA 59+00 TO 62+00

SCALE H:1" = 20' V:1" = 20'
VERIFY SCALES 0 1"
BAR IS ONE INCH ON ORIGINAL DRAWING IF NOT ONE INCH ON THIS SHEET, ADJUST SCALES ACCORDINGLY

PROJECT NUMBER 26284002
SHEET CODE: X-15
SHEET NUMBER: 78 OF 119

USERNAME: BillShad Tue 08 Jul 2008 09:32am
FILENAME: C:\pwworking\sac\d0171341\X-15
DOCUMENT NUMBER:SFC_LP-C-1028-XXXXXXX

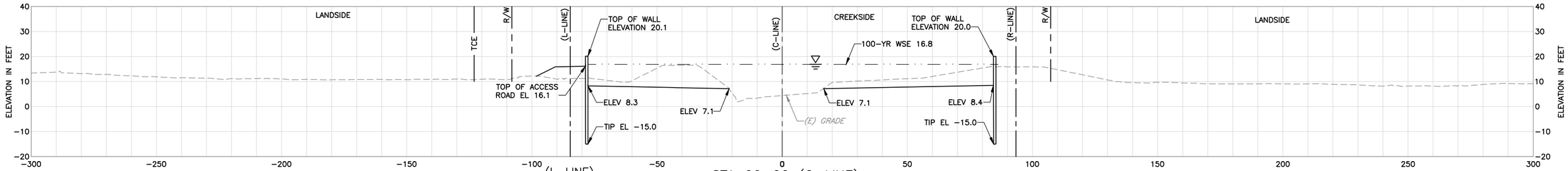

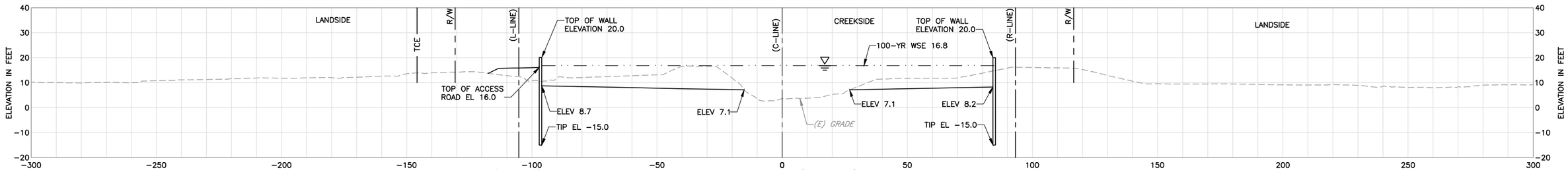

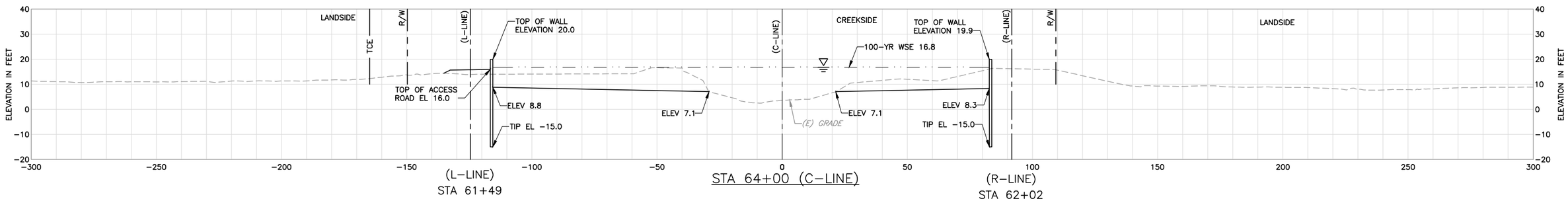

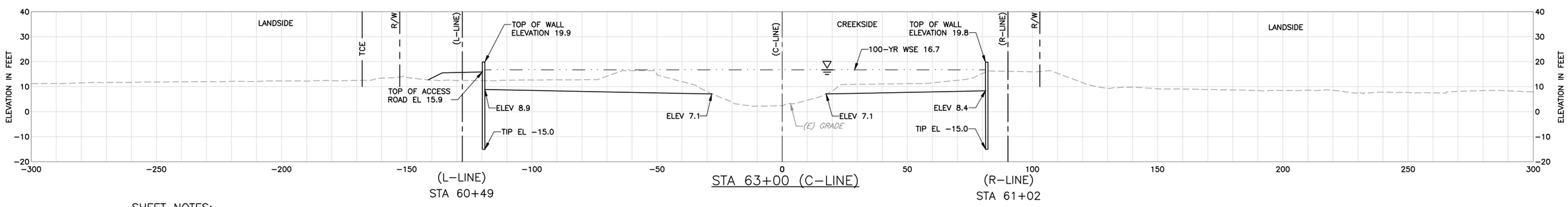

SHEET NOTES:

1 ALL SECTIONS LOOK UP STATION/UPSTREAM.

LEGEND:

EXISTING GRADE

FINISHED GRADE

100-YR WSE

REV	DESCRIPTION	DATE	APPR.
	DRAFT 100% AUGUST 2014		

HDR Engineering, Inc.

DATE JULY 2014
DESIGN L. JONES
DRAWN H. SUAREZ
CHECKED P. HRADILEK

ENGINEERING CERTIFICATION
REGISTERED PROFESSIONAL ENGINEER LANCE M. JONES 68342 Exp. 06-30-15 CIVIL STATE OF CALIFORNIA
PRELIMINARY
PROJECT ENGINEER DATE

SAN FRANCISQUITO CREEK JOINT POWERS AUTHORITY
ACCEPTED BY DISTRICT
PROJECT ENGINEER DATE

PROJECT NAME AND SHEET DESCRIPTION:
SAN FRANCISQUITO CREEK FLOOD REDUCTION, ECOSYSTEM RESTORATION, & RECREATION PROJECT
CROSS SECTIONS – (C-LINE)
STA 63+00 TO 66+00

SCALE H:1" = 20' V:1" = 20'
VERIFY SCALES 0 1"
BAR IS ONE INCH ON ORIGINAL DRAWING IF NOT ONE INCH ON THIS SHEET, ADJUST SCALES ACCORDINGLY

PROJECT NUMBER 26284002
SHEET CODE: X-16
SHEET NUMBER: 79 OF 119

DOCUMENT NUMBER: SFC_LP-C-1028-XXXXXXX

USERNAME: BillShad Tue 08 Jul 2008 09:32am
FILENAME: C:\pwworking\sac\d0171341\X-16

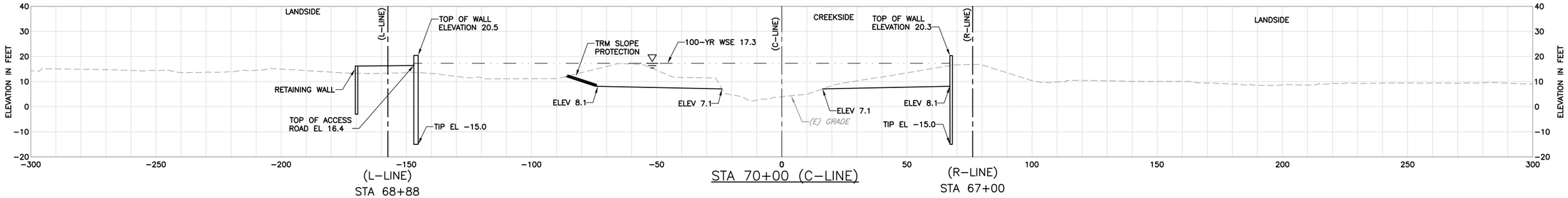

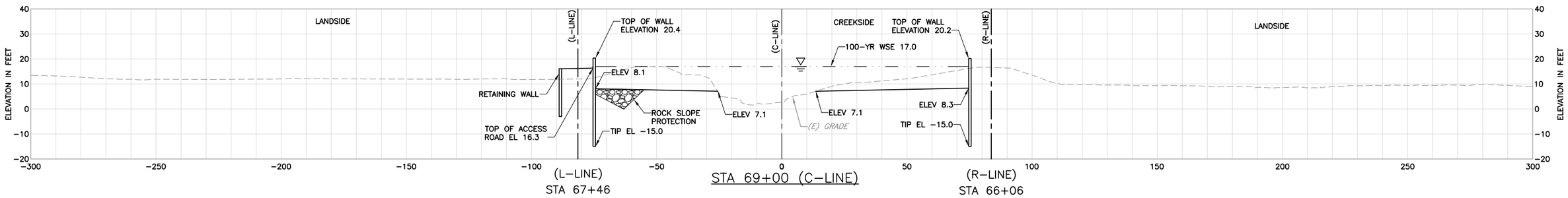

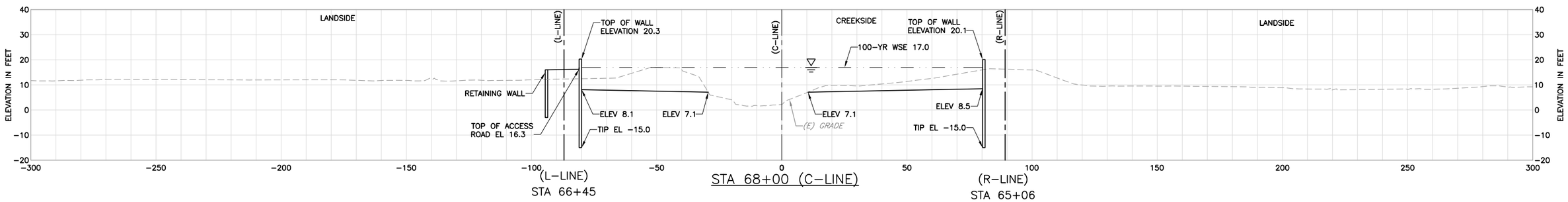

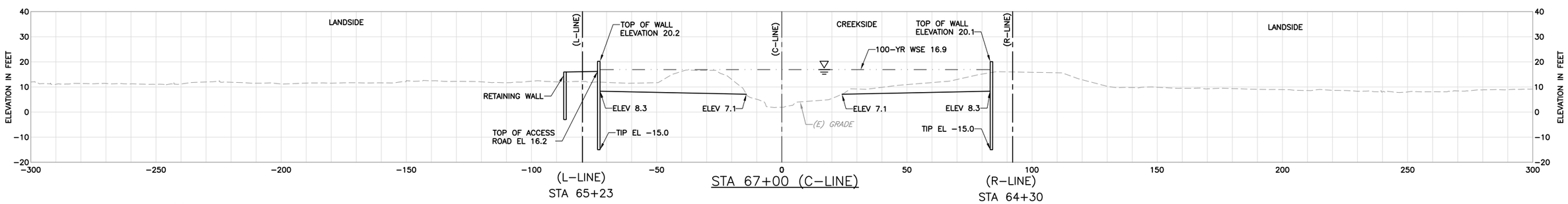

SHEET NOTES:

1 ALL SECTIONS LOOK UP STATION/UPSTREAM.

LEGEND:

EXISTING GRADE

FINISHED GRADE

100-YR WSE

REV	DESCRIPTION	DATE	APPR.
	DRAFT 100% AUGUST 2014		

HDR Engineering, Inc.

DATE: JULY 2014
DESIGN: L. JONES
DRAWN: H. SUAREZ
CHECKED: P. HRADILEK

ENGINEERING CERTIFICATION
REGISTERED PROFESSIONAL ENGINEER LANCE M. JONES 66314 Exp. 6-30-15 CIVIL STATE OF CALIFORNIA
PRELIMINARY
PROJECT ENGINEER DATE

SAN FRANCISQUITO CREEK JOINT POWERS AUTHORITY

ACCEPTED BY DISTRICT

PROJECT ENGINEER DATE

PROJECT NAME AND SHEET DESCRIPTION:

SAN FRANCISQUITO CREEK FLOOD REDUCTION, ECOSYSTEM RESTORATION, & RECREATION PROJECT

CROSS SECTIONS – (C-LINE) STA 67+00 TO 70+00

SCALE H:1" = 20' V:1" = 20'

VERIFY SCALES 0 1"

BAR IS ONE INCH ON ORIGINAL DRAWING IF NOT ONE INCH ON THIS SHEET, ADJUST SCALES ACCORDINGLY

PROJECT NUMBER 26284002

SHEET CODE: X-17

SHEET NUMBER: 80 OF 119

DOCUMENT NUMBER: SFC_LP-C-1028-XXXXXXX

USERNAME: BillShad Tue 08 Jul 2008 09:32am
FILENAME: C:\pwworking\sac\d0171341\X-17

C:\pwworking\sac\d0171341\X-17.dwg, X-17, 9/4/2014 10:57:48 AM

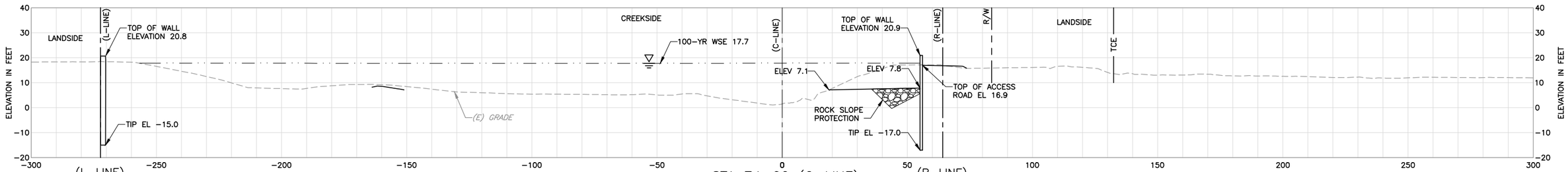

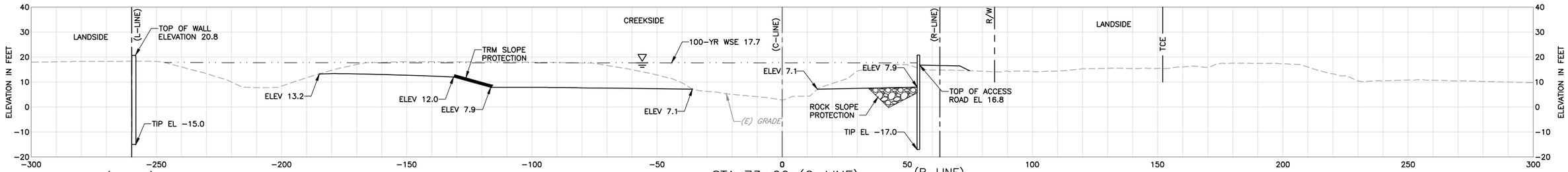

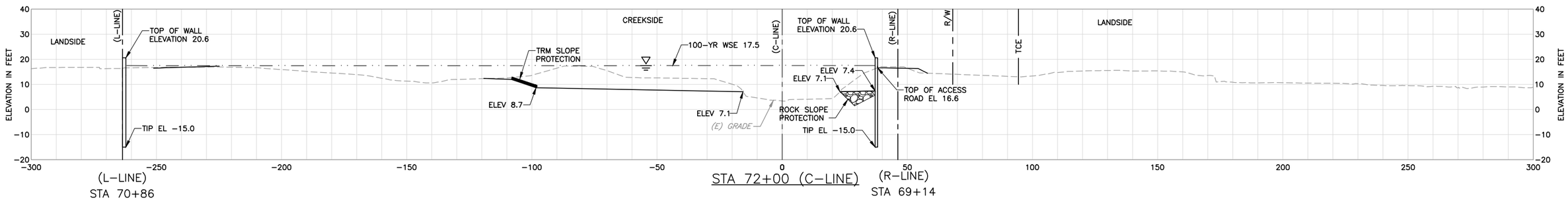

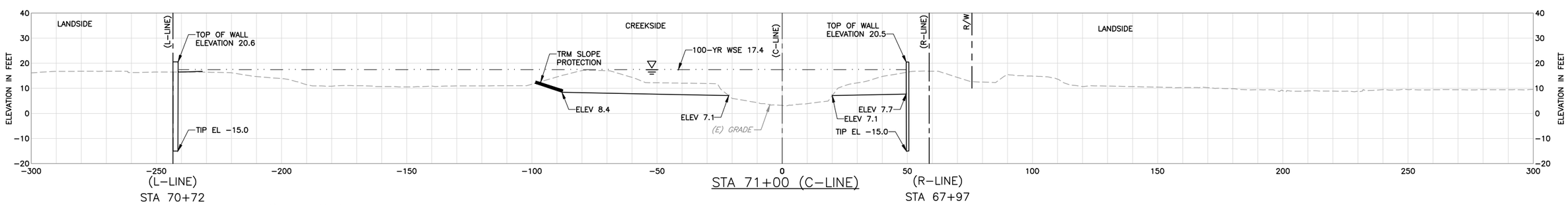

SHEET NOTES:

1 ALL SECTIONS LOOK UP STATION/UPSTREAM.

LEGEND:

EXISTING GRADE

FINISHED GRADE

100-YR WSE

REV	DESCRIPTION	DATE	APPR.
	DRAFT 100% AUGUST 2014		

HDR Engineering, Inc.

DATE: JULY 2014
DESIGN: L. JONES
DRAWN: H. SUAREZ
CHECKED: P. HRADILEK

ENGINEERING CERTIFICATION
REGISTERED PROFESSIONAL ENGINEER LANCE M. JONES 68074 Exp. 6-30-15 CIVIL STATE OF CALIFORNIA
PRELIMINARY
PROJECT ENGINEER DATE

SAN FRANCISQUITO CREEK JOINT POWERS AUTHORITY

ACCEPTED BY DISTRICT

PROJECT ENGINEER DATE

PROJECT NAME AND SHEET DESCRIPTION:

SAN FRANCISQUITO CREEK FLOOD REDUCTION, ECOSYSTEM RESTORATION, & RECREATION PROJECT

CROSS SECTIONS – (C-LINE) STA 71+00 TO 74+00

SCALE H:1" = 20' V:1" = 20'

VERIFY SCALES 0 1"

BAR IS ONE INCH ON ORIGINAL DRAWING IF NOT ONE INCH ON THIS SHEET, ADJUST SCALES ACCORDINGLY

PROJECT NUMBER 26284002

SHEET CODE: X-18

SHEET NUMBER: 81 OF 119

DOCUMENT NUMBER:SFC_LP-C-1028-XXXXXXX

USERNAME: BillShad Tue 08 Jul 2008 09:32am
FILENAME: C:\pwworking\sac\d0171341\X-18

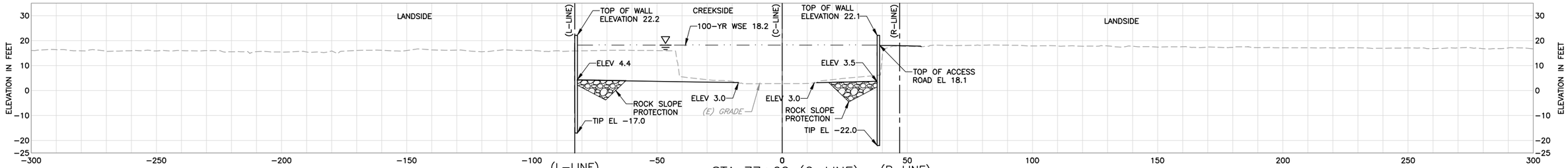

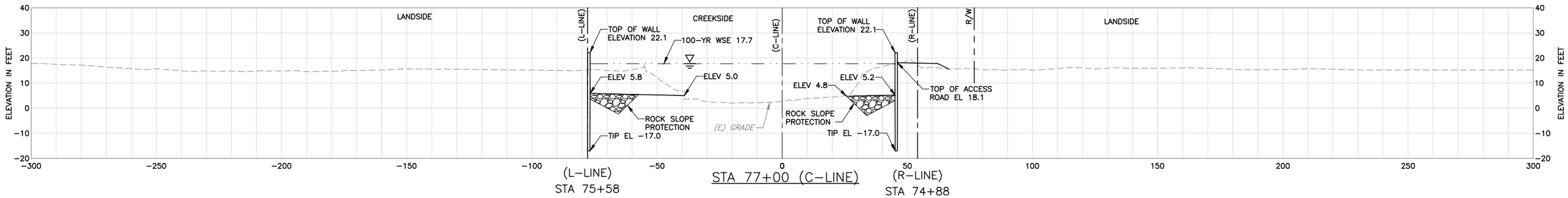

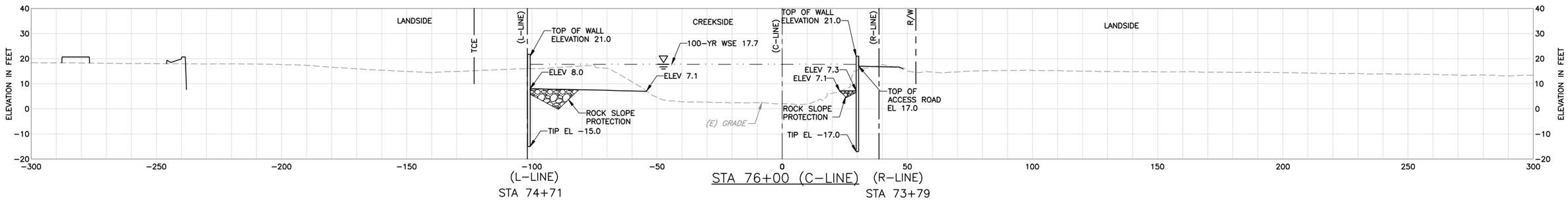

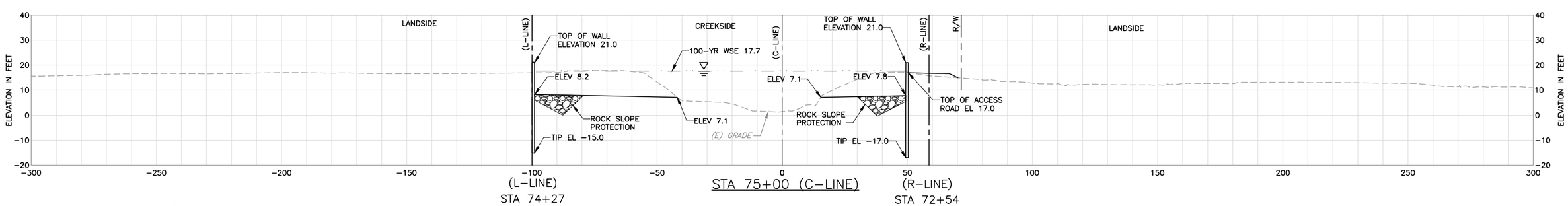

SHEET NOTES:

1 ALL SECTIONS LOOK UP STATION/UPSTREAM.

LEGEND:

EXISTING GRADE

FINISHED GRADE

100-YR WSE

REV	DESCRIPTION	DATE	APPR.
	DRAFT 100% AUGUST 2014		

HDR Engineering, Inc.

DATE	JULY 2014
DESIGN	L. JONES
DRAWN	H. SUAREZ
CHECKED	P. HRADILEK

ENGINEERING CERTIFICATION

REGISTERED PROFESSIONAL ENGINEER LANCE M. JONES 66342 Exp. 06-30-15 CIVIL STATE OF CALIFORNIA

PRELIMINARY

PROJECT ENGINEER DATE

SAN FRANCISQUITO CREEK JOINT POWERS AUTHORITY

ACCEPTED BY DISTRICT

PROJECT ENGINEER DATE

PROJECT NAME AND SHEET DESCRIPTION:

SAN FRANCISQUITO CREEK FLOOD REDUCTION, ECOSYSTEM RESTORATION, & RECREATION PROJECT

CROSS SECTIONS – (C-LINE)
STA 75+00 TO 77+62

SCALE H:1" = 20' V:1" = 20'

VERIFY SCALES 0 1"

BAR IS ONE INCH ON ORIGINAL DRAWING IF NOT ONE INCH ON THIS SHEET, ADJUST SCALES ACCORDINGLY

PROJECT NUMBER 26284002

SHEET CODE: X-19

SHEET NUMBER: 82 OF 119

DOCUMENT NUMBER: SFC_LP-C-1028-XXXXXXX

USERNAME: BillShad Tue 08 Jul 2008 09:32am
FILENAME: C:\pwworking\sac\d0171341\X-19

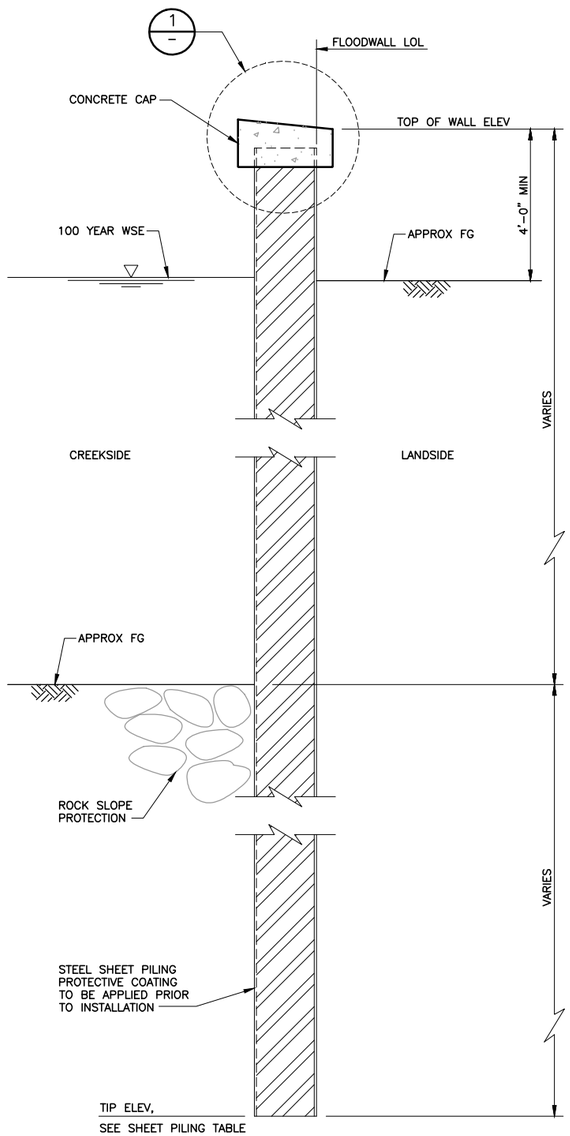

TYPICAL SHEET PILE FLOODWALL SECTION

SCALE: 1/2"=1'-0"

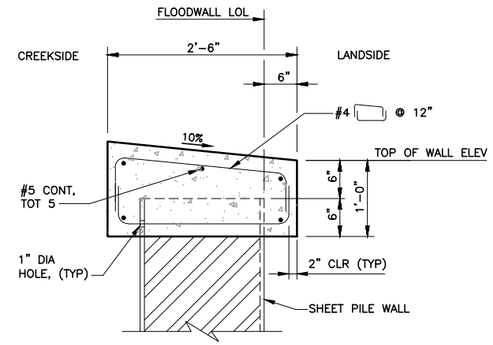

DETAIL 1 – TYPICAL CONCRETE CAP

SCALE: 1" = 1'-0"

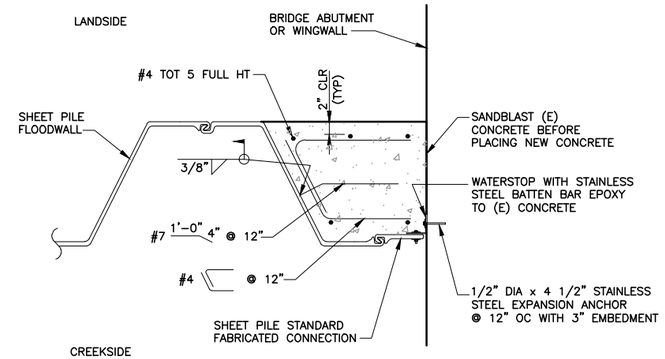

DETAIL 2 (C-9) – END SHEET PILE FLOODWALL AT CALTRANS BRIDGE

SCALE: 1" = 1'-0"

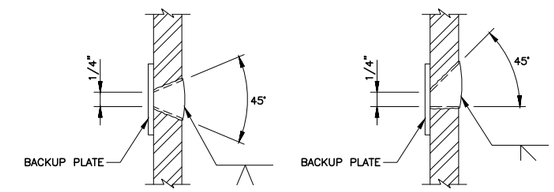

DETAIL 3 – SHEET PILE WELDING SPLICE – BUTT JOINTS

NO SCALE

NOTES:

1. SINGLE VEE-GROOVE PERMITTED FOR ALL POSITIONS.
2. SINGLE BEVEL-GROOVE PERMITTED FOR HORIZONTAL JOINTS ONLY.
3. STAGGER SPLICE 5'-0" MIN FROM ADJACENT SHEET PILE JOINT.

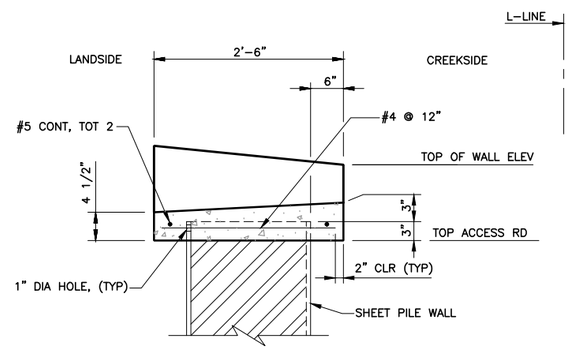

SECTION A – THRU SCUPPER

SCALE: 1" = 1'-0"

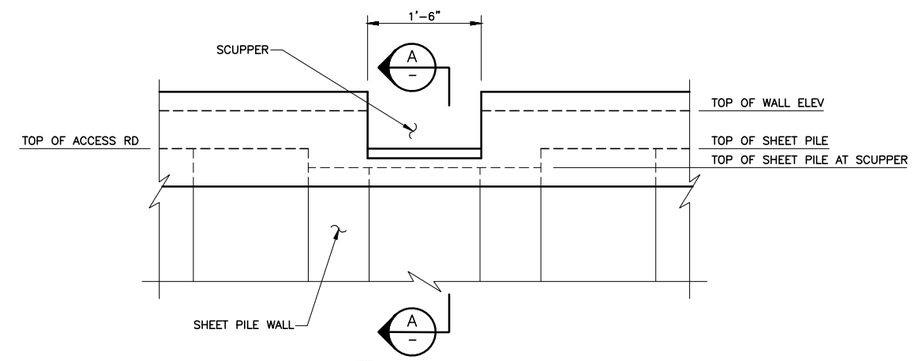

DETAIL 4 – SCUPPER ELEVATION

SCALE: 1" = 1'-0"

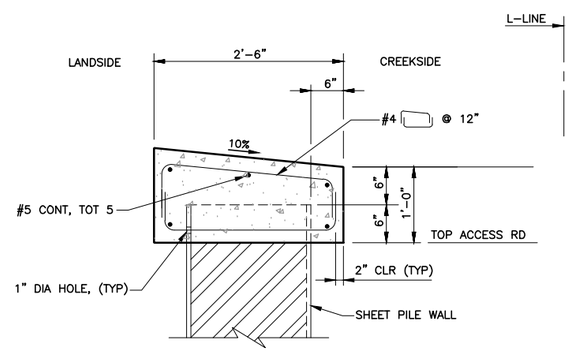

DETAIL 5 – RETAINING WALL CAP

SCALE: 1" = 1'-0"

GENERAL NOTES:

DESIGN:	U.S. ARMY CORPS OF ENGINEERS ENGINEER MANUAL-1110-2-2504, "DESIGN OF SHEET PILE WALLS"
LIVE LOADING:	100 PSF TO UPPER 10 FEET OF WALL
SEISMIC LOADING:	40H (PSF)
REINFORCED CONCRETE:	fy = 60,000 PSI f'c = 4,000 PSI n = 9

1. SHEET PILING DESIGNED USING THE SOIL PARAMETERS BASED ON "GEOTECHNICAL EVALUATION REPORT, SAN FRANCISQUITO CREEK FLOOD PROTECTION PROJECT" BY GEI CONSULTANTS DATED DECEMBER 2011.
2. CONTRACTOR SHALL BE RESPONSIBLE FOR DETERMINING THE ADEQUACY OF THE WALLS WITH RESPECT TO LOADS OTHER THAN THOSE LISTED HEREIN AND THAT ARE APPLIED TO THE WALLS AS A RESULT OF THE CONSTRUCTION PROCEDURES AND OPERATIONS.
3. CONCRETE SURFACE FINISH: A CLASS 1 SURFACE FINISH IS REQUIRED FOR ALL EXPOSED SURFACES.
4. SHOP DRAWINGS: CONTRACTOR SHALL SUBMIT FOR REVIEW SHOP DRAWINGS SHOWING THE PROPOSED SHEET PILING SYSTEM AND DETAILS. THE PROPOSED SHEET PILING SYSTEM SHALL MEET THE MINIMUM SECTION PROPERTY REQUIREMENTS. SHOP DRAWINGS SHALL BE SIGNED AND SEALED BY A PROFESSIONAL ENGINEER REGISTERED IN THE STATE OF CALIFORNIA.
5. ALL REINFORCING STEEL SHALL BE EPOXY COATED.

SHEET PILING TABLE

	STATION	WALL SECTION	TIP ELEVATION
R-LINE FLOODWALL	29+53.75 TO 31+57.64	AZ 24-700	-15.0
	54+00.00 TO 61+00.00	AZ 19-700	-15.0
	61+00.00 TO 70+00.00	AZ 24-700	-15.0
	70+00.00 TO 75+00.00	AZ 36-700	-17.0
	75+00.00 TO 75+54.13	AZ 50	-22.0
L-LINE FLOODWALL	49+00.00 TO 62+00.00	AZ 19-700	-15.0
	62+00.00 TO 71+05.00	AZ 24-700	-15.0
	71+80.00 TO 75+00.00	AZ 24-700	-15.0
	75+00.00 TO 76+29.42	AZ 36-700	-17.0
L-LINE RETAINING WALL	64+00.00 TO 69+95.00	AZ 19-700	-3.0

1. FOR TOP OF WALL ELEVATIONS, SEE PLAN & PROFILE SHEETS ON "CIVIL PLANS".
2. USE WALL SECTION SHOWN OR APPROVED EQUAL.

REV	DESCRIPTION	DATE	APPR.
	DRAFT 100% AUGUST 2014		

HDR Engineering, Inc.

DATE: JULY 2014
DESIGN: SP
DRAWN: JV
CHECKED: JM

ENGINEERING CERTIFICATION
REGISTERED PROFESSIONAL ENGINEER KEITH F. DE LONG No. 18214 Exp. 6-30-14 CIVIL STATE OF CALIFORNIA
PRELIMINARY
PROJECT ENGINEER DATE

SAN FRANCISQUITO CREEK JOINT POWERS AUTHORITY
ACCEPTED BY DISTRICT
PROJECT ENGINEER DATE

PROJECT NAME AND SHEET DESCRIPTION:
SAN FRANCISQUITO CREEK FLOOD REDUCTION, ECOSYSTEM RESTORATION, & RECREATION PROJECT
SAN FRANCISQUITO CREEK FLOODWALL SHEET PILE DETAILS NO. 1

SCALE: AS SHOWN
VERIFY SCALES: 0 1" BAR IS ONE INCH ON ORIGINAL DRAWING IF NOT ONE INCH ON THIS SHEET, ADJUST SCALES ACCORDINGLY
PROJECT NUMBER: 26284002
SHEET CODE: S-1
SHEET NUMBER: 83 OF 119

DOCUMENT NUMBER: CAD_GD-C-3011-XXXXXX
USERNAME: BillShad Tue 08 Jul 2008 09:32am
FILENAME: C:\pwworking\sac\d0171341\S-01 SFCJPA-RW

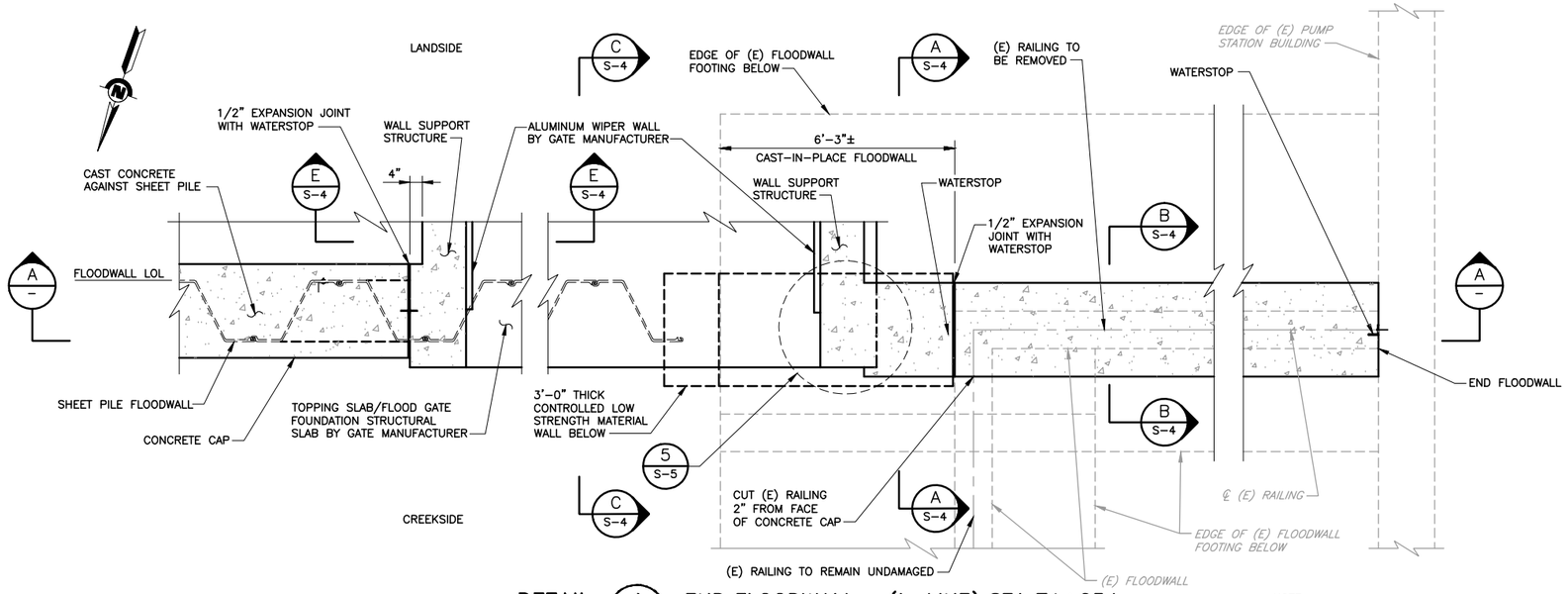

DETAIL 1 / C-21 END FLOODWALL – (L-LINE) STA 71+05±

SCALE: 1/2" = 1'-0"

NOTE:
1. SHEET PILING WITHIN 20 FEET OF THE EXISTING PUMP STATION BUILDING SHALL BE INSTALLED BY USING SHEET PRESSING METHOD.

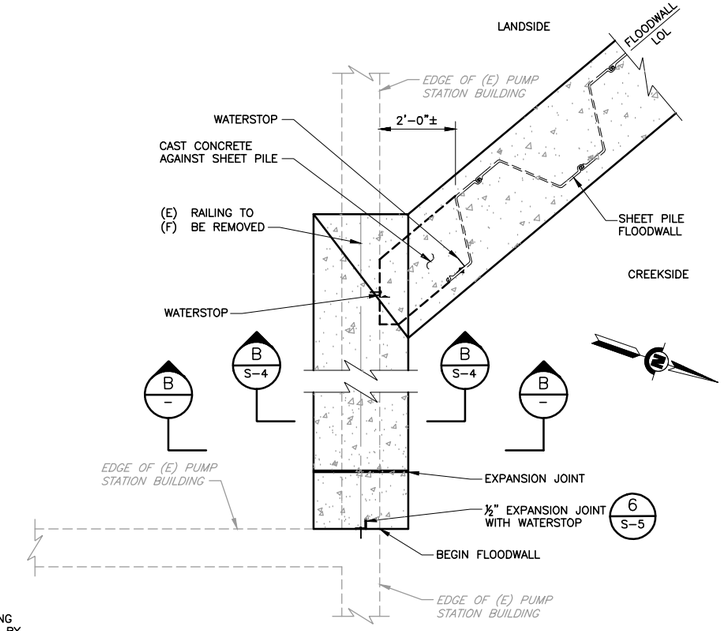

DETAIL 2 / C-21 BEGIN FLOODWALL – (L-LINE) STA 71+57±

SCALE: 1/2" = 1'-0"

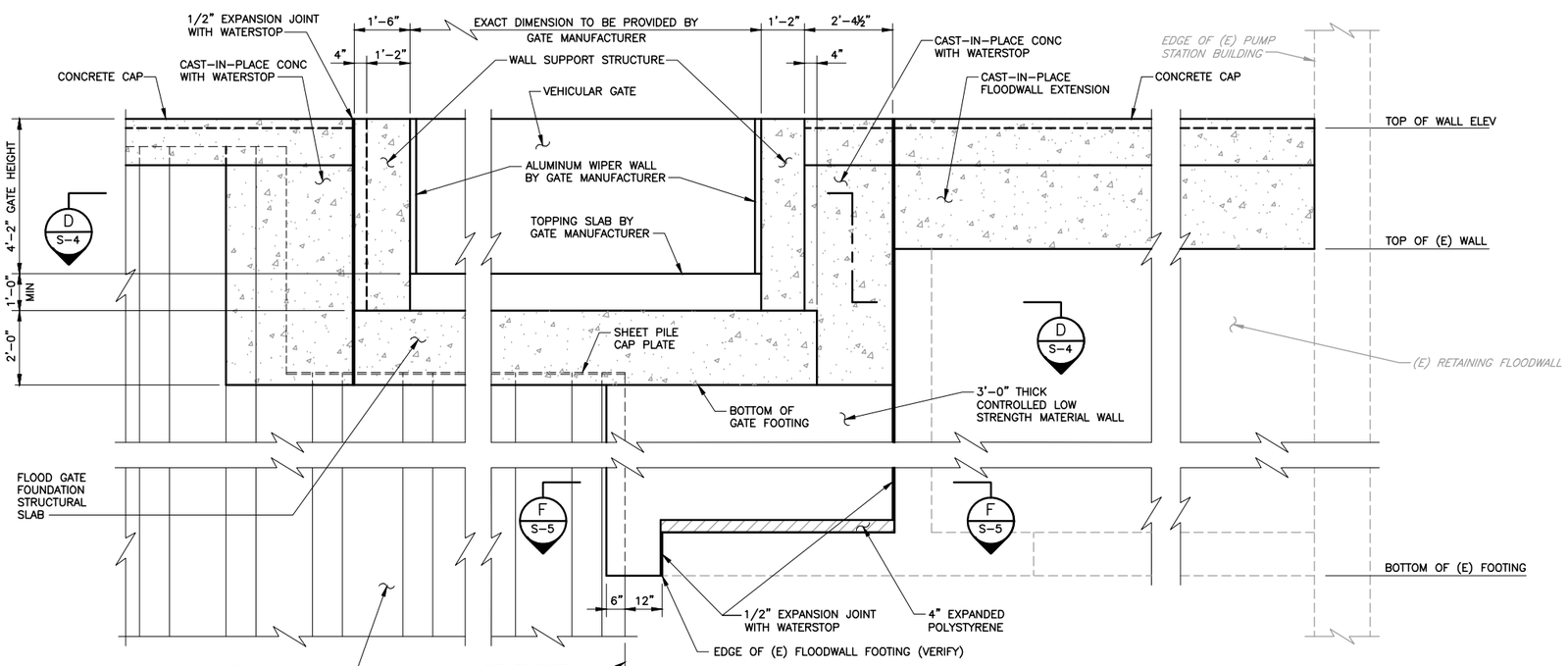

SECTION A / – PARTIAL ELEVATION

SCALE: 1/2" = 1'-0"

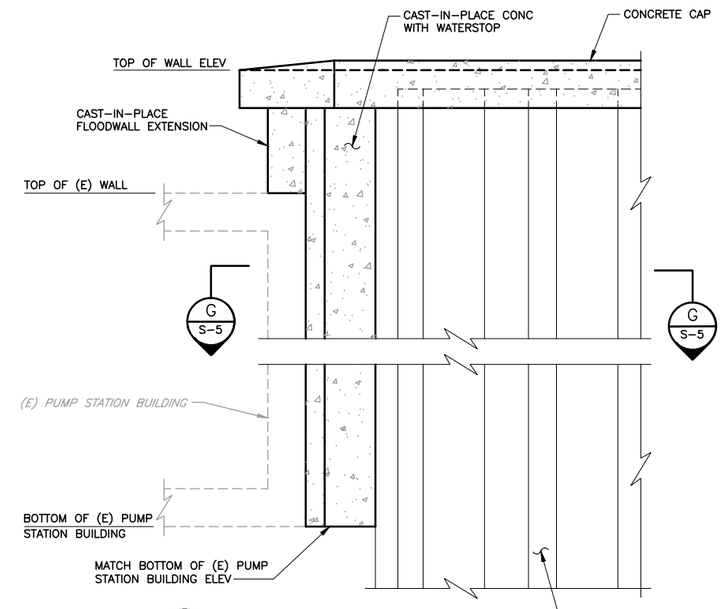

SECTION B / – PARTIAL ELEVATION

SCALE: 1/2" = 1'-0"

REV	DESCRIPTION	DATE	APPR.
	DRAFT 100% AUGUST 2014		

HDR Engineering, Inc.

DATE	ENGINEERING CERTIFICATION
JULY 2014	
DESIGN SP	
DRAWN JV	
CHECKED JM	

PROJECT ENGINEER DATE

SAN FRANCISQUITO CREEK JOINT POWERS AUTHORITY

ACCEPTED BY DISTRICT

PROJECT ENGINEER DATE

PROJECT NAME AND SHEET DESCRIPTION:

SAN FRANCISQUITO CREEK FLOOD REDUCTION, ECOSYSTEM RESTORATION, & RECREATION PROJECT

SAN FRANCISQUITO CREEK FLOODWALL SHEET PILE DETAILS NO. 2

SCALE	PROJECT NUMBER
AS SHOWN	26284002
VERIFY SCALES 0 1" BAR IS ONE INCH ON ORIGINAL DRAWING IF NOT ONE INCH ON THIS SHEET, ADJUST SCALES ACCORDINGLY	SHEET CODE: S-2
	SHEET NUMBER: 84 OF 119

DOCUMENT NUMBER: CAD_GD-C-3011-XXXXXX

USERNAME: BillShad Tue 08 Jul 2008 09:32am
FILENAME: C:\pwworking\sac\d0171341\S-02 SFCJPA-RW

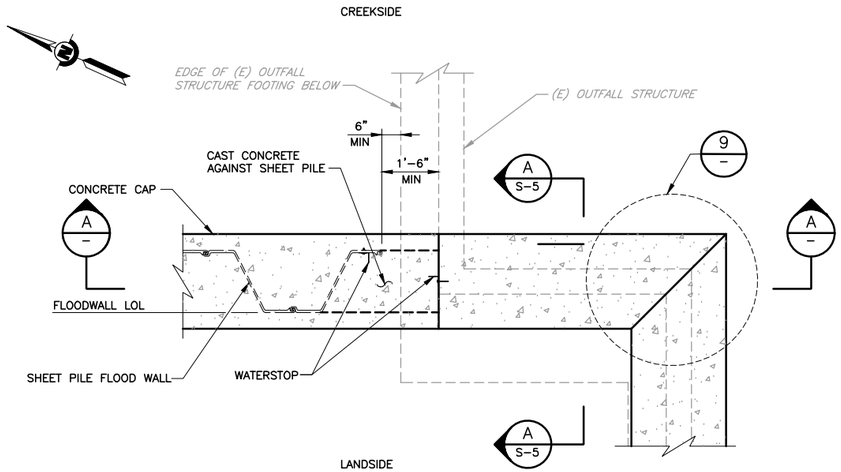

DETAIL 3 / C-4 PARTIAL PLAN – (R-LINE) STA 29+98.16

SCALE: 1/2" = 1'-0"

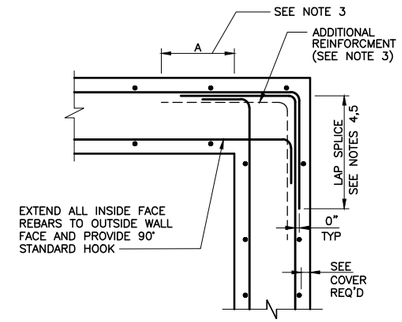

NOTES:

1. SEE INDIVIDUAL STRUCTURE SHEETS FOR EXTRA HORIZONTAL REBARS AT CORNERS AND WALL INTERSECTIONS.
2. LONG STRAIGHT BARS WITH LAP SPLICES BENT BARS AT ENDS MAY BE SUBSTITUTED FOR LONG BARS WITH END HOOKS.
3. ADDITIONAL CORNER BARS REQUIRED ONLY AS SPECIFIED ON DESIGN DRAWINGS, AND TO BE STAGGERED. FULL WALL HEIGHT, WITH HORIZONTAL WALL REINFORCING. A=1/5 THE CLEAR SPAN DISTANCE MEASURED HORIZONTALLY BETWEEN WALLS, BUT IN NO CASE LESS THAN THE REQUIRED LENGTH OF LAPPED SPLICES FOR TOP BARS (UNLESS AT A PENETRATION).
4. REINFORCING BENDS PER CONCRETE REINFORCING STEEL INSTITUTE STANDARDS.
5. LAP SPLICES AND HOOK LENGTHS PER AMERICAN CONCRETE INSTITUTE 318.

DETAIL 9 / – HORIZONTAL REINFORCEMENT AT CORNER

NTS

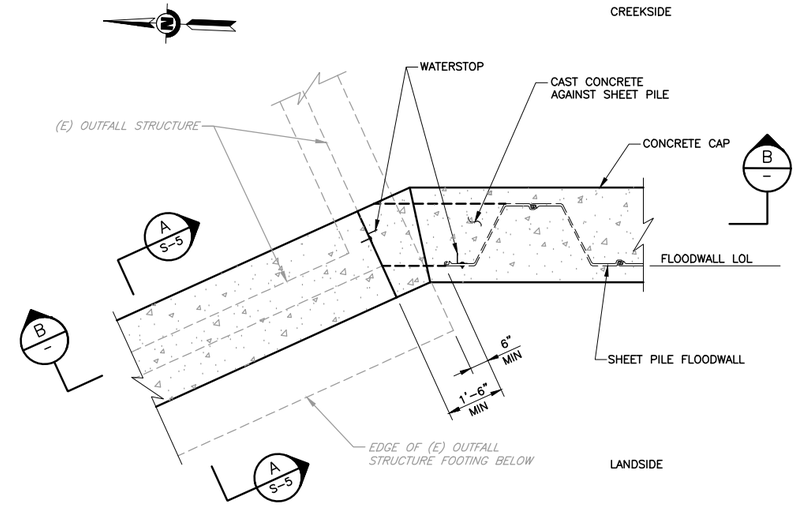

DETAIL 4 / C-4 PARTIAL PLAN – (R-LINE) STA 30+39.24

SCALE: 1/2" = 1'-0"

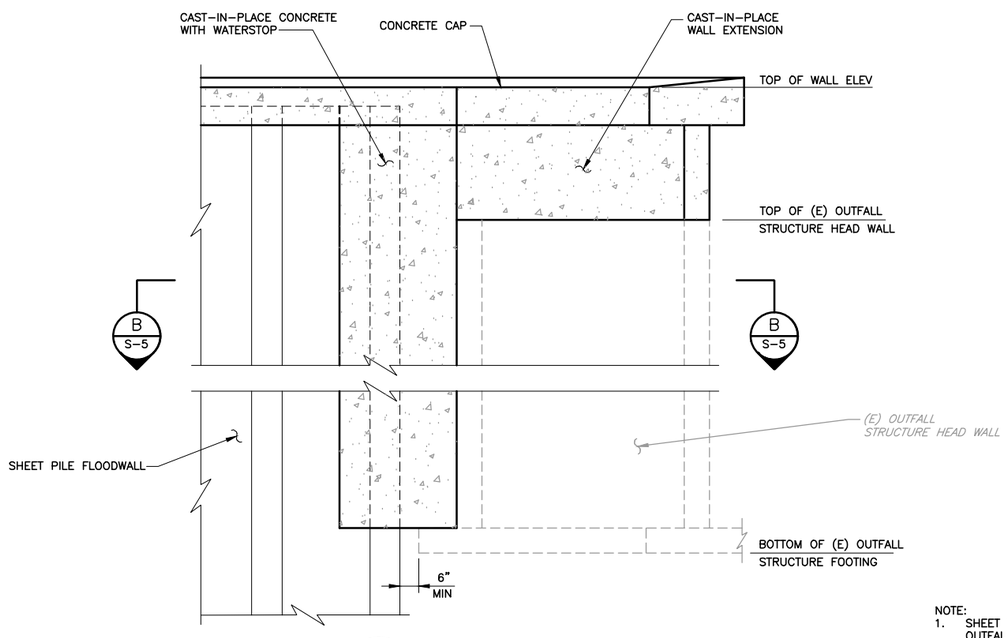

SECTION A / – PARTIAL ELEVATION

SCALE: 1/2" = 1'-0"

NOTE:

1. SHEET PILING WITHIN 20 FEET OF THE EXISTING OUTFALL STRUCTURE AND PEDESTRIAN BRIDGE WINGWALL SHALL BE INSTALLED BY USING SHEET PRESSING METHOD.

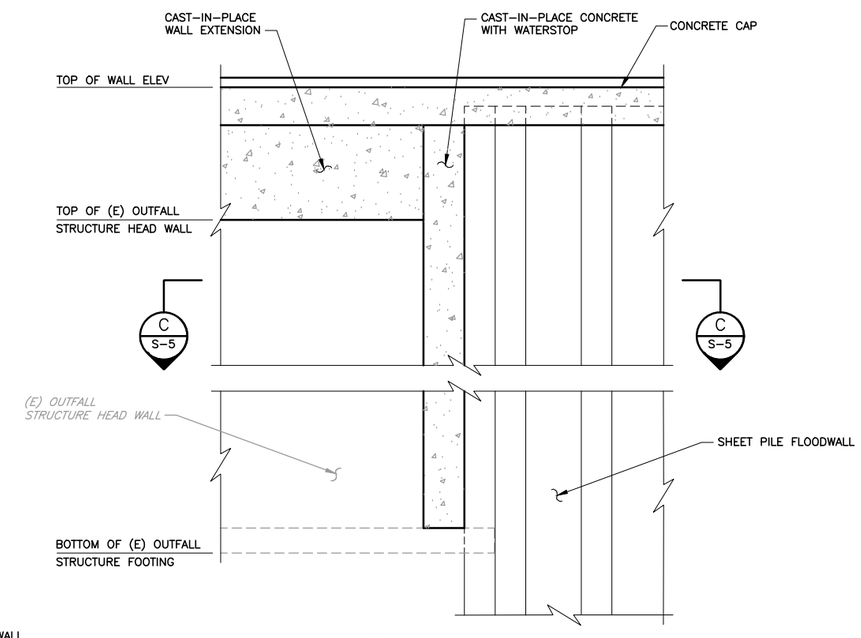

SECTION B / – PARTIAL ELEVATION

SCALE: 1/2" = 1'-0"

REV	DESCRIPTION	DATE	APPR.
	DRAFT 100% AUGUST 2014		

HDR Engineering, Inc.

DATE	
JULY 2014	
DESIGN	SP
DRAWN	JV
CHECKED	JM

ENGINEERING CERTIFICATION

REGISTERED PROFESSIONAL ENGINEER KEITH F. DE LONG No. 18214 Exp. 6-30-14 CIVIL STATE OF CALIFORNIA

PROJECT ENGINEER DATE

SAN FRANCISQUITO CREEK JOINT POWERS AUTHORITY

ACCEPTED BY DISTRICT

PROJECT ENGINEER DATE

PROJECT NAME AND SHEET DESCRIPTION:

SAN FRANCISQUITO CREEK FLOOD REDUCTION, ECOSYSTEM RESTORATION, & RECREATION PROJECT

SAN FRANCISQUITO CREEK FLOODWALL SHEET PILE DETAILS NO. 4

SCALE: AS SHOWN

VERIFY SCALES: 0 1" BAR IS ONE INCH ON ORIGINAL DRAWING IF NOT ONE INCH ON THIS SHEET, ADJUST SCALES ACCORDINGLY

PROJECT NUMBER: 26284002

SHEET CODE: S-3

SHEET NUMBER: 85 OF 119

DOCUMENT NUMBER: CAD_GD-C-3011-XXXXXX

USERNAME: BillShad Tue 08 Jul 2008 09:32am
FILENAME: C:\pwworking\sac\d0171341\S-03 SFCJPA-RW

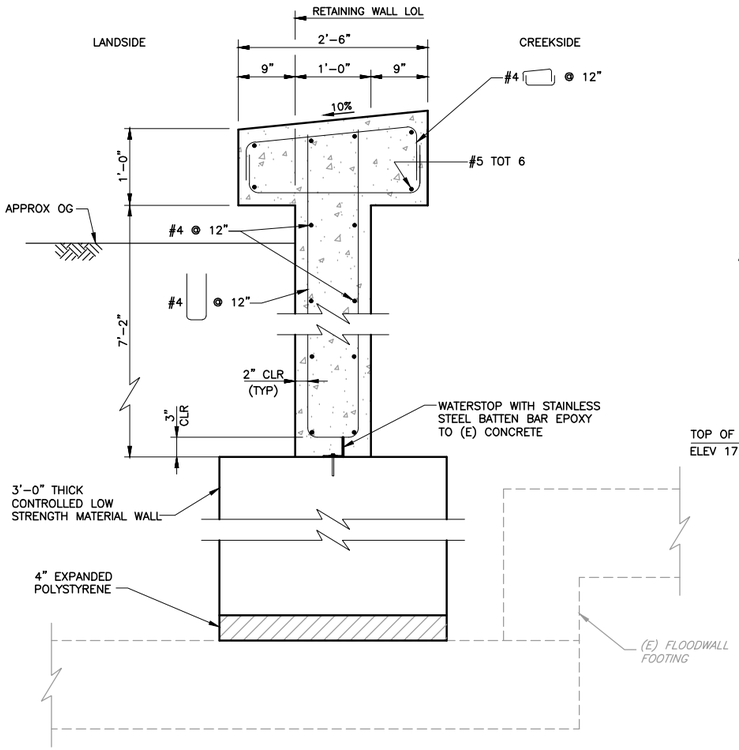

SECTION A / S-2 CAST-IN-PLACE FLOODWALL

SCALE: 1" = 1'-0"

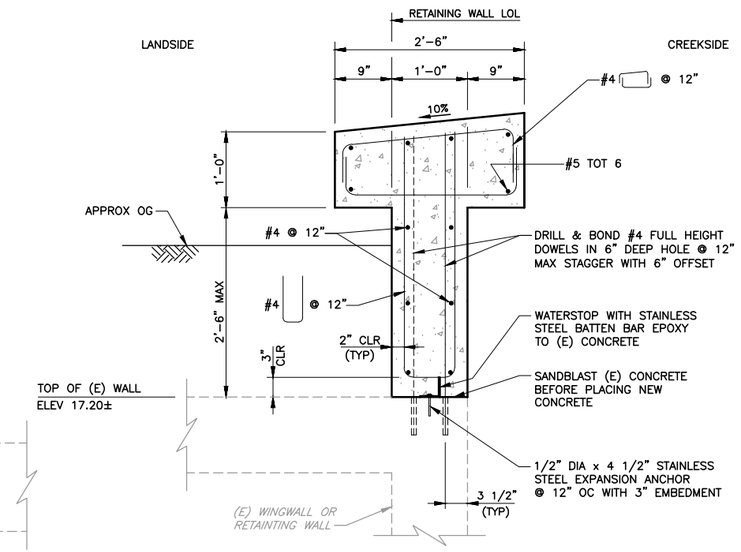

SECTION B / S-2 FLOODWALL EXTENSION

SCALE: 1" = 1'-0"

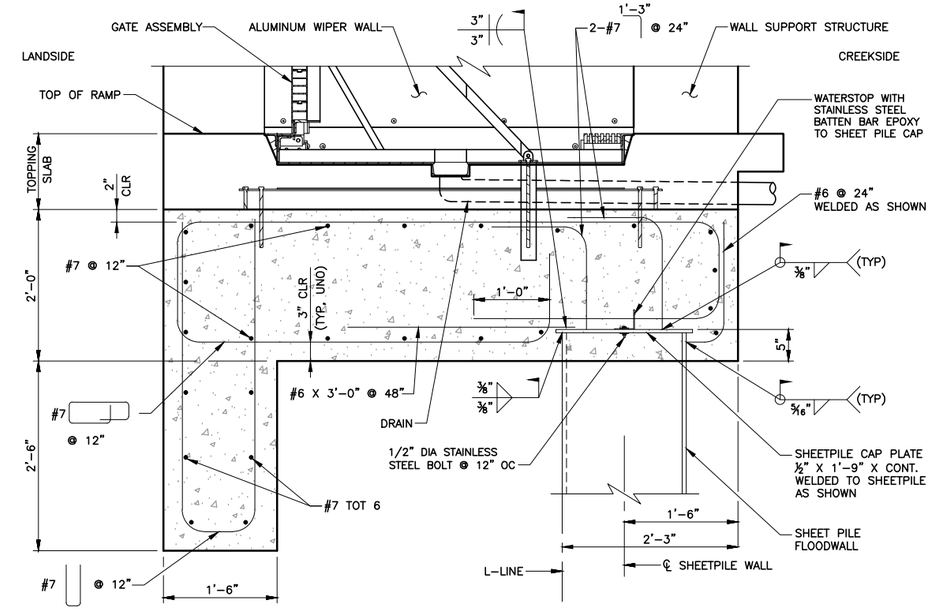

SECTION C / S-2 FLOOD GATE FOUNDATION STRUCTURAL SLAB

SCALE: 1" = 1'-0"

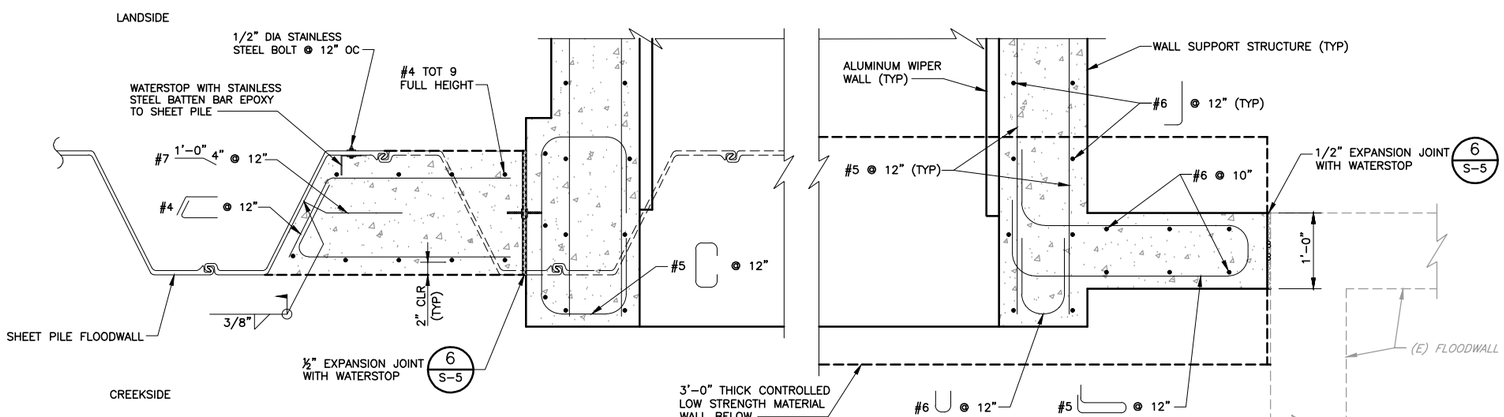

SECTION D / S-2 CAST-IN-PLACE FLOODWALL AT VEHICULAR GATE

SCALE: 1" = 1'-0"

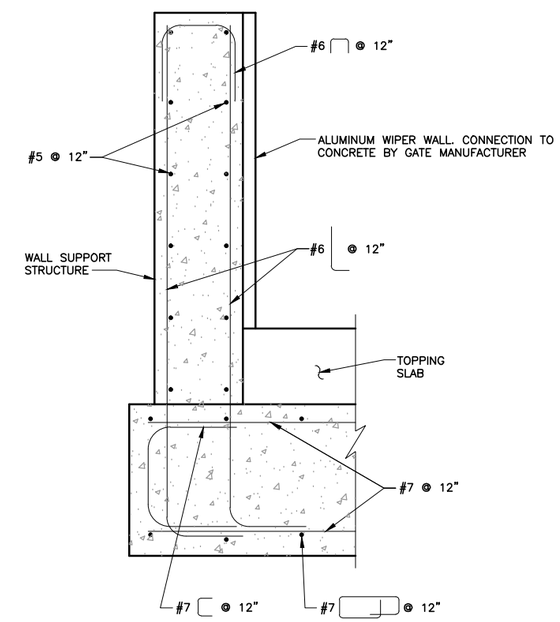

SECTION E / S-2 FLOOD GATE STRUCTURE

SCALE: 1" = 1'-0"

REV	DESCRIPTION	DATE	APPR.
	DRAFT 100% AUGUST 2014		

HDR Engineering, Inc.

DATE	JULY 2014
DESIGN	SP
DRAWN	JV
CHECKED	JM

ENGINEERING CERTIFICATION: REGISTERED PROFESSIONAL ENGINEER, KEITH F. DE LUNA, No. 18214, Exp. 6-30-14, CIVIL, STATE OF CALIFORNIA — PROJECT ENGINEER DATE

SAN FRANCISQUITO CREEK JOINT POWERS AUTHORITY

ACCEPTED BY DISTRICT

PROJECT ENGINEER DATE

PROJECT NAME AND SHEET DESCRIPTION:

SAN FRANCISQUITO CREEK FLOOD REDUCTION, ECOSYSTEM RESTORATION, & RECREATION PROJECT

SAN FRANCISQUITO CREEK FLOODWALL SHEET PILE DETAILS NO. 3

SCALE: AS SHOWN

VERIFY SCALES: 0 — 1"

BAR IS ONE INCH ON ORIGINAL DRAWING IF NOT ONE INCH ON THIS SHEET, ADJUST SCALES ACCORDINGLY

PROJECT NUMBER: 26284002

SHEET CODE: S-4

SHEET NUMBER: 86 OF 119

DOCUMENT NUMBER: CAD_GD-C-3011-XXXXXX

USERNAME: BillShad Tue 08 Jul 2008 09:32am
FILENAME: C:\pwworking\sac\d0171341\S-04 SFCJPA-RW

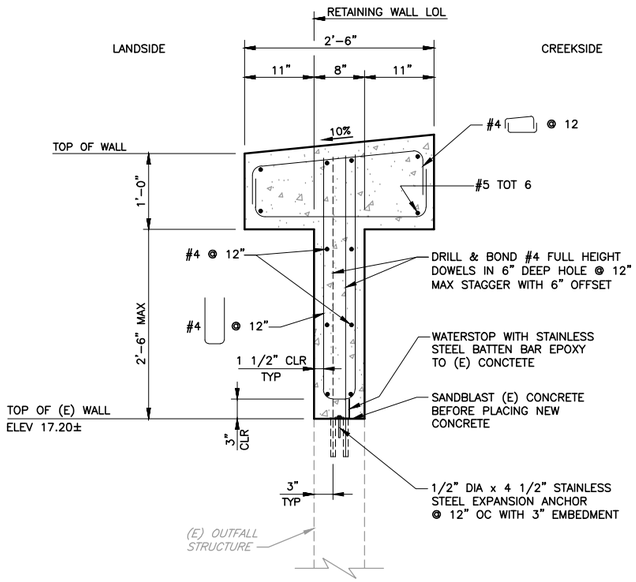

SECTION A S-3 WALL EXTENSION
SCALE: 1" = 1'-0"

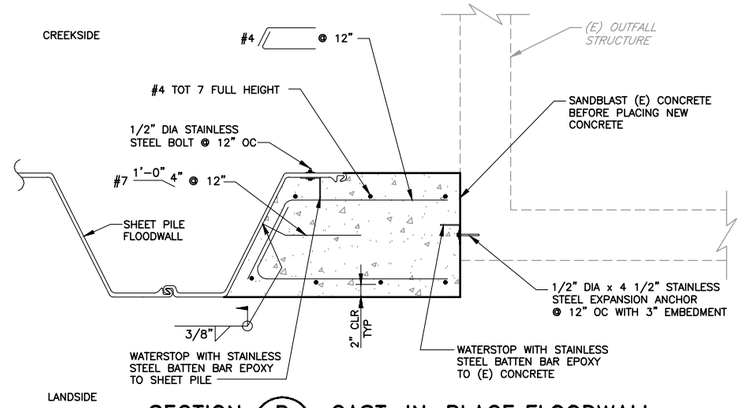

SECTION B S-3 CAST-IN-PLACE FLOODWALL
SCALE: 1" = 1'-0"

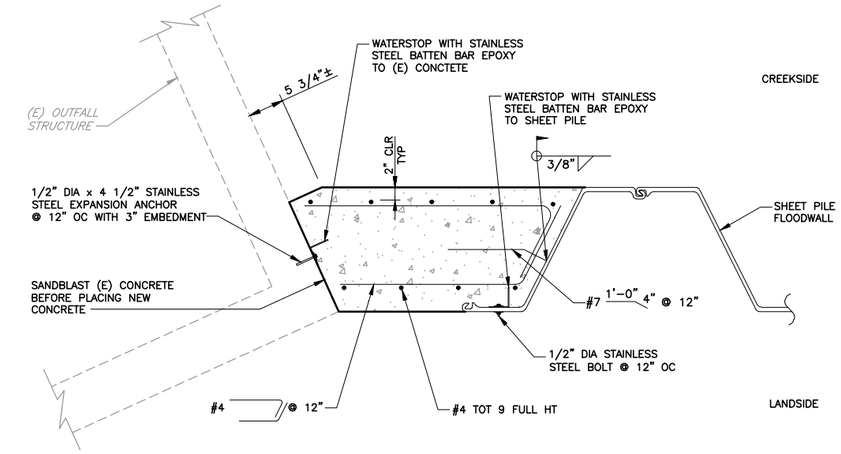

SECTION C S-3 CAST-IN-PLACE FLOODWALL
SCALE: 1" = 1'-0"

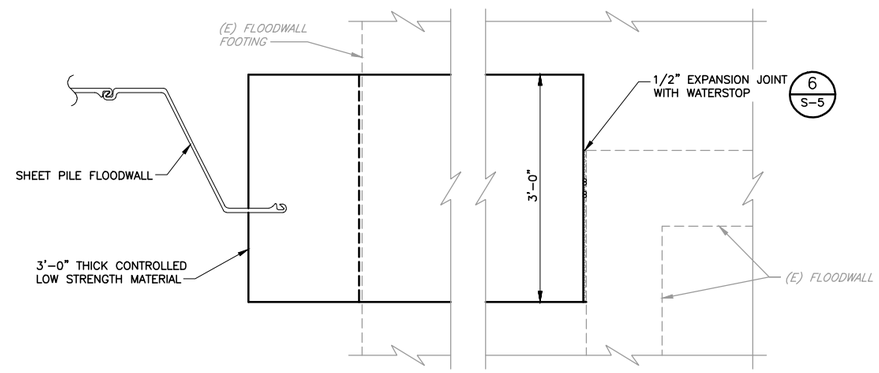

SECTION F S-2 THRU CONTROLLED LOW STRENGTH MATERIAL WALL
SCALE: 1" = 1'-0"

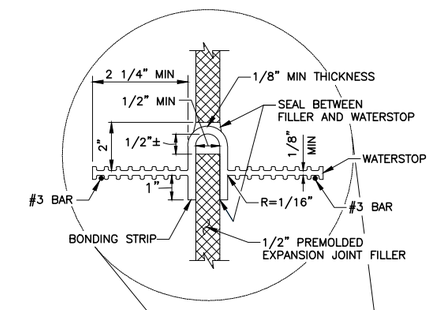

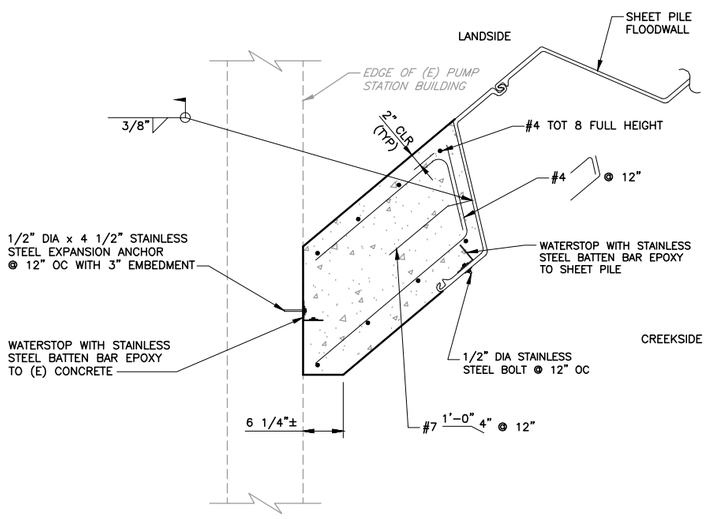

NOTE:
1. CHIP AWAY WALL TEXTURE TO CREATE A UNIFORM ROUGHENED SURFACE TO CAST CONCRETE AGAINST.

SECTION G S-2 CAST-IN-PLACE FLOODWALL
SCALE: 1" = 1'-0"

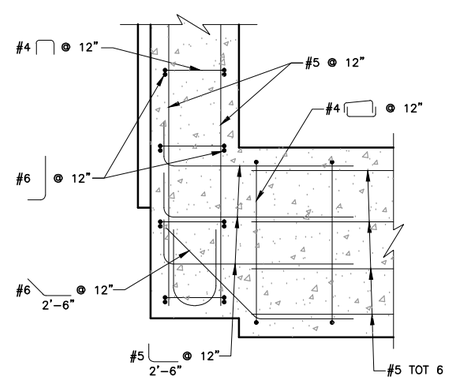

DETAIL 5 S-2 CONCRETE CAP CONNECTION
SCALE: 1/2" = 1'-0"

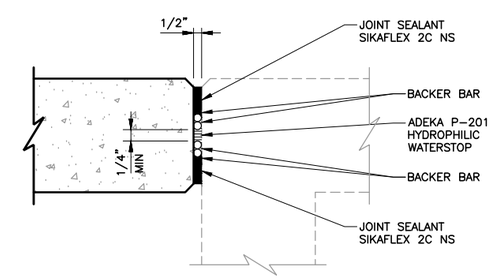

NEW CONCRETE CAST AGAINST EXISTING CONCRETE

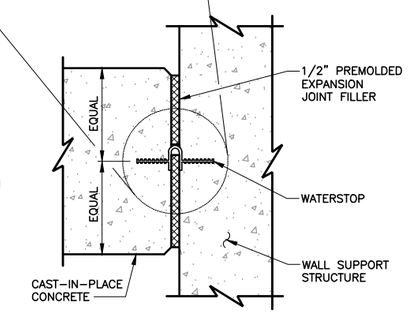

NEW CONCRETE CAST AGAINST NEW CONCRETE

DETAIL 6 S-4 EXPANSION JOINT DETAILS
SCALE: 1/2" = 1'-0"

REV	DESCRIPTION	DATE	APPR.
	DRAFT 100% AUGUST 2014		

HDR Engineering, Inc.

DATE: JULY 2014
DESIGN: SP
DRAWN: JV
CHECKED: JM

ENGINEERING CERTIFICATION
REGISTERED PROFESSIONAL ENGINEER KEITH F. DE LONG No. 38214 Exp. 6-30-14 CIVIL STATE OF CALIFORNIA
PRELIMINARY
PROJECT ENGINEER DATE

SAN FRANCISQUITO CREEK JOINT POWERS AUTHORITY
ACCEPTED BY DISTRICT
PROJECT ENGINEER DATE

PROJECT NAME AND SHEET DESCRIPTION:
SAN FRANCISQUITO CREEK FLOOD REDUCTION, ECOSYSTEM RESTORATION, & RECREATION PROJECT
SAN FRANCISQUITO CREEK FLOOD WALL SHEET PILE DETAILS NO. 5

SCALE: AS SHOWN
VERIFY SCALES: 0 1" BAR IS ONE INCH ON ORIGINAL DRAWING IF NOT ONE INCH ON THIS SHEET, ADJUST SCALES ACCORDINGLY
PROJECT NUMBER: 26284002
SHEET CODE: S-5
SHEET NUMBER: 87 OF 119

DOCUMENT NUMBER: CAD_GD-C-3011-XXXXXX

USERNAME: BillShad Tue 08 Jul 2008 09:32am
FILENAME: C:\pwworking\sac\d0171341\S-05 SFCJPA-RW

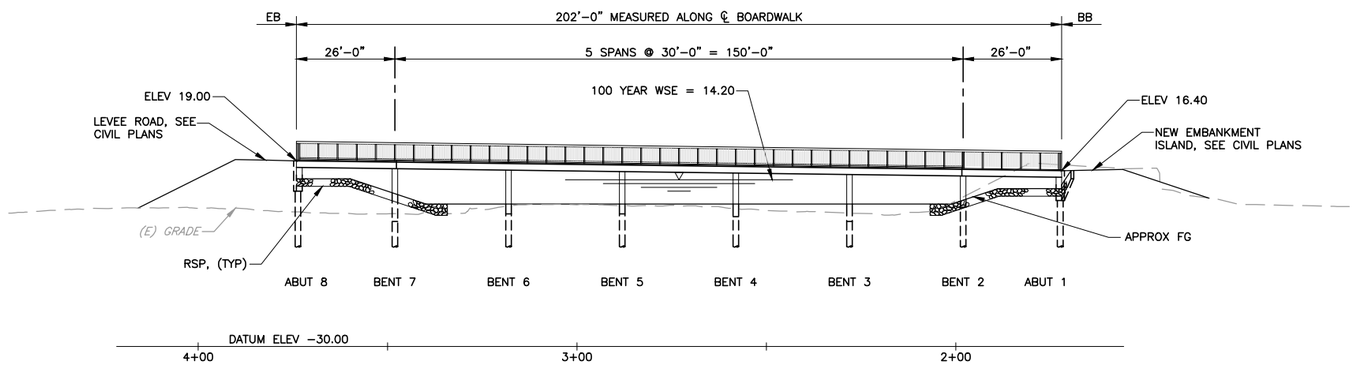

ELEVATION
SCALE: 1"=20'

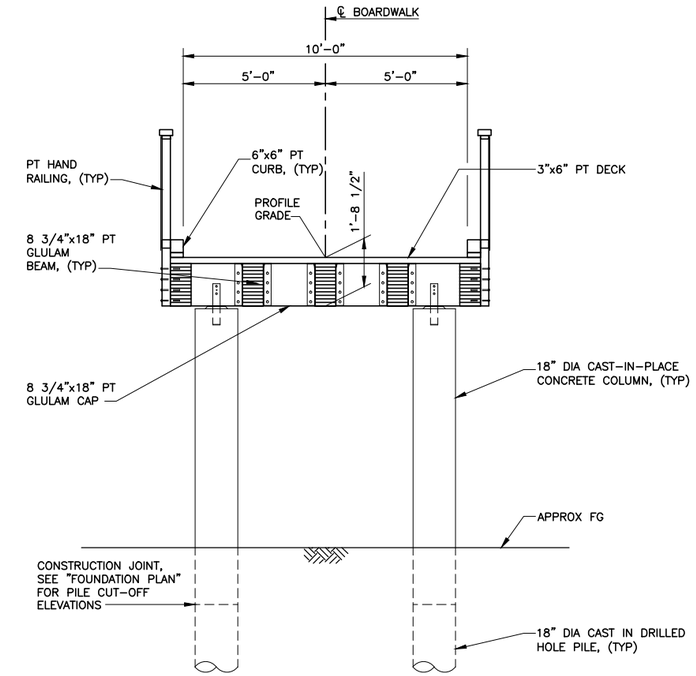

TYPICAL SECTION
SCALE: 3/8"=1'-0"

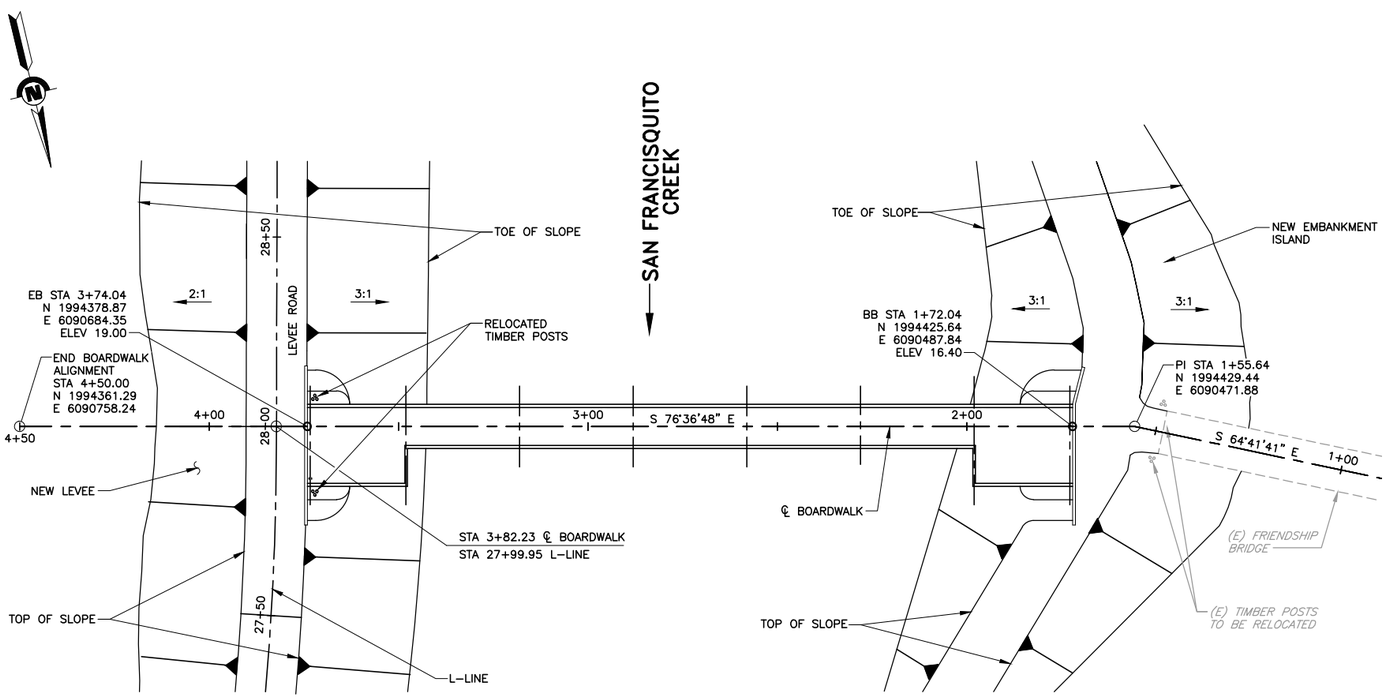

PLAN
SCALE: 1"=20'

STRUCTURAL NOTES:

1. CODE: AASHTO LRFD BRIDGE DESIGN SPECIFICATIONS, 4TH EDITION DATED 2008 AND AASHTO LRFD GUIDE SPECIFICATIONS FOR THE DESIGN OF PEDESTRIAN BRIDGES 2009 SEISMIC: ZONE 4 – CALTRANS SEISMIC DESIGN CRITERIA (SDC) VERSION 1.4 JULY 2006.
2. LIVE LOAD: 90 PSF PEDESTRIAN LOADING.
3. SPECIFICATIONS: 2006 CALTRANS STANDARD SPECIFICATIONS.
4. FOUNDATION: SEE SOILS REPORTS AS PREPARED BY GEI CONSULTANTS, DATED DECEMBER 2011. ALL FOUNDATION EXCAVATIONS SHALL BE INSPECTED AND APPROVED BY A LICENSED SOILS ENGINEER PRIOR TO PLACING ANY FOUNDATION CONCRETE.
5. CONCRETE: CEMENT SHALL BE TYPE V PER ASTM C150–96. READY MIXED PER ASTM C–94. MINIMUM 28 DAY COMPRESSIVE STRENGTH = 4000 PSI. MAX SLUMP = 3". MAX WATER–CEMENTITIOUS MATERIALS RATIO, BY WEIGHT WITH NORMAL–WEIGHT AGGREGATE CONCRETE SHALL BE 0.45. FY = 60 KSI; F'C = 3.6 KSI.
6. REINFORCEMENT: REBAR, DEFORMED BARS, ASTM A615–60 EPOXY COATED. LAP BARS 38 BAR DIAMETERS MINIMUM AT SPLICES, CORNERS, AND INTERSECTIONS.
7. STRUCTURAL STEEL: ALL STRUCTURAL STEEL TO BE HOT–DIPPED GALVANIZED PER ASTM 123. FABRICATE IN ACCORDANCE WITH AISC MANUAL OF STEEL. STRUCTURAL STEEL – ASTM A36, BOLTS – ASTM A307 GALVANIZED.
8. WOOD: ALL SAWN AND GLUE LAMINATED WOOD TO BE PRESSURE TREATED (PT). FRAMING ANCHORS AND HANGERS SHALL BE SIMPSON MANUFACTURER HOT–DIPPED GALVANIZED OR EQUAL. ALL SAWN LUMBER SHALL BE STAMPED WITH THE GRADE MARK OF AN APPROVED LUMBER GRADING AGENCY. ALL LUMBER SHALL HAVE A MINIMUM SPECIFIC GRAVITY OF 0.50. MOISTURE CONTENT AT THE TIME OF AND THROUGHOUT CONSTRUCTION SHALL NOT EXCEED 19%. SAWN LUMBER SHALL BE DOUGLAS FIR LARCH, NO. 1 GRADE. GLUE–LAMINATED BEAMS SHALL BE DOUGLAS FIR COMBINATION 16F–V6, AND SHALL HAVE THE FOLLOWING MINIMUM PROPERTIES:

   Fb = 1600 PSI; Fv = 265 PSI; E = 1,500,000 PSI; Fc (PARALLEL) = 1550 PSI; Fc (PERPENDICULAR) = 560 PSI
9. PILES: SEE "PILE DATA TABLE" ON "FOUNDATION PLAN" SHEET.
10. GROUT: ALL GROUT SHALL BE 5,000 PSI MINIMUM, NON–SHRINK FLOWABLE GROUT AND INSTALLED BEFORE ADDING VERTICAL LOAD.

REV	DESCRIPTION	DATE	APPR.
	DRAFT 100% AUGUST 2014		

HDR Engineering, Inc.

DATE: JULY 2014
DESIGN: KS
DRAWN: JV
CHECKED: JM

ENGINEERING CERTIFICATION
REGISTERED PROFESSIONAL ENGINEER KYLE SANFORD No. 077819 Exp. 12-30-15 CIVIL STATE OF CALIFORNIA
PROJECT ENGINEER DATE

SAN FRANCISQUITO CREEK JOINT POWERS AUTHORITY
ACCEPTED BY DISTRICT
PROJECT ENGINEER DATE

PROJECT NAME AND SHEET DESCRIPTION:
SAN FRANCISQUITO CREEK FLOOD REDUCTION, ECOSYSTEM RESTORATION, & RECREATION PROJECT
SAN FRANCISQUITO CREEK BOARDWALK GENERAL PLAN

SCALE: AS SHOWN
VERIFY SCALES: 0 1"
BAR IS ONE INCH ON ORIGINAL DRAWING IF NOT ONE INCH ON THIS SHEET, ADJUST SCALES ACCORDINGLY
PROJECT NUMBER: 26284002
SHEET CODE: S-6
SHEET NUMBER: 88 OF 119

DOCUMENT NUMBER: CAD_GD-C-3011-XXXXXX

USERNAME: BillShad Tue 08 Jul 2008 09:32am
FILENAME: C:\pwworking\sac\d0171341\S-06 SFCJPA-GP

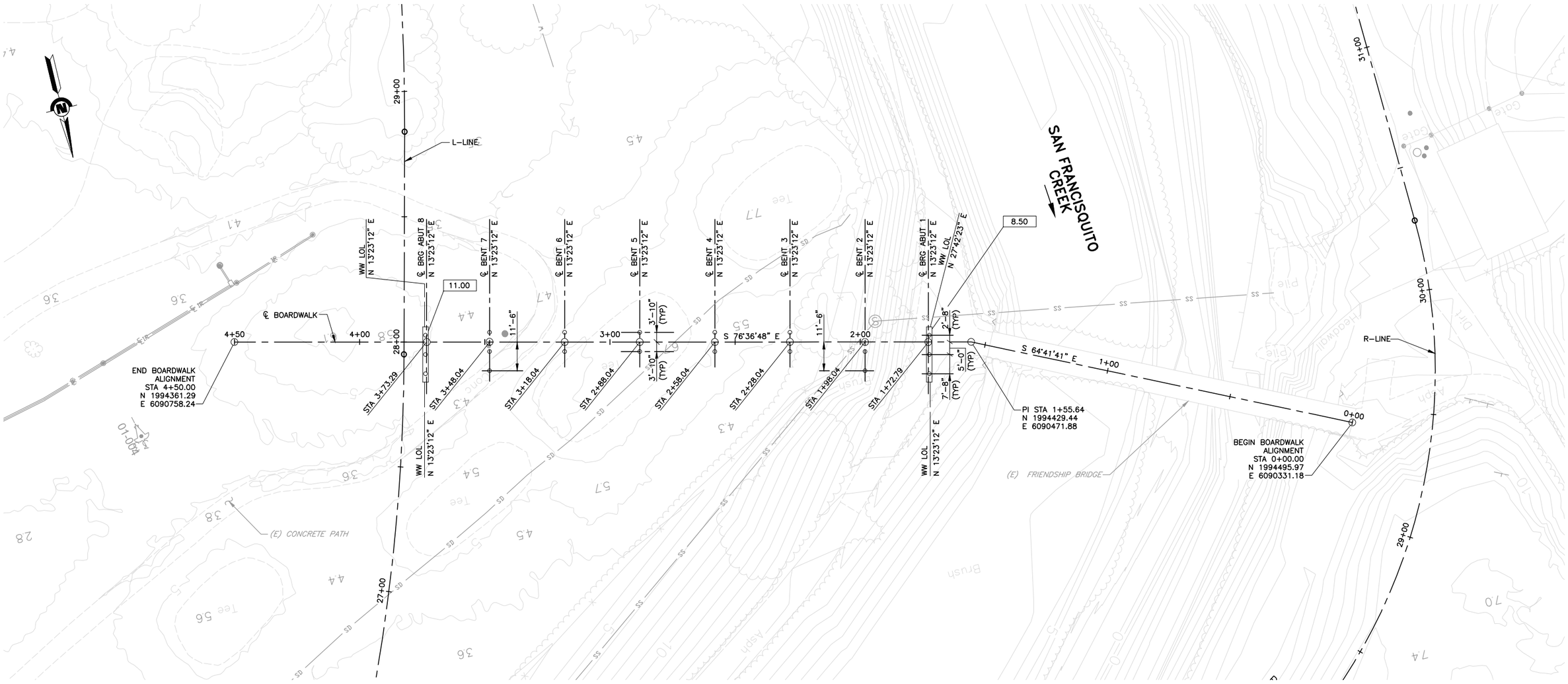

PLAN

SCALE: 1"=20'

PILE DATA TABLE						
LOCATION	PILE TYPE	NOMINAL RESISTANCE (KIPS)		DESIGN TIP ELEVATIONS (FT)	SPECIFIED TIP ELEVATIONS (FT)	CUT-OFF ELEVATIONS (FT)
		COMPRESSION	TENSION			
ABUT 1	18" DIA CAST IN DRILLED HOLE	90	0	-25.00	-25.00	8.75
BENT 2	18" DIA CAST IN DRILLED HOLE	90	0	-25.00	-25.00	6.75
BENT 3	18" DIA CAST IN DRILLED HOLE	90	0	-25.00	-25.00	3.00
BENT 4	18" DIA CAST IN DRILLED HOLE	90	0	-25.00	-25.00	4.25
BENT 5	18" DIA CAST IN DRILLED HOLE	90	0	-25.00	-25.00	5.00
BENT 6	18" DIA CAST IN DRILLED HOLE	90	0	-25.00	-25.00	5.00
BENT 7	18" DIA CAST IN DRILLED HOLE	90	0	-25.00	-25.00	3.00
ABUT 8	18" DIA CAST IN DRILLED HOLE	90	0	-25.00	-25.00	11.25

DESIGN TIP ELEVATIONS ARE CONTROLLED BY THE FOLLOWING DEMANDS: (1) COMPRESSION, (2) TENSION, (3) LATERAL LOADS.

NOTES:

1. THE CONTRACTOR SHALL VERIFY ALL CONTROLLING FIELD CONDITIONS BEFORE ORDERING OR FABRICATING ANY MATERIAL OR PERFORMING ANY WORK.
2. SEE "CIVIL PLANS" FOR TYPE AND LOCATION OF ALL EXISTING AND PROPOSED UTILITIES.
3. LOCATION OF EXISTING UTILITIES SHOWN ARE APPROXIMATE. THE CONTRACTOR SHALL VERIFY LOCATIONS OF ALL AFFECTED UTILITIES PRIOR TO PERFORMING ANY EXCAVATION.
4. FOR SURVEY CONTROL POINTS, SEE "CIVIL PLANS".

LEGEND:

INDICATES BOTTOM OF FOOTING.

REV	DESCRIPTION	DATE	APPR.
	DRAFT 100% AUGUST 2014		

HDR Engineering, Inc.

DATE: JULY 2014
DESIGN: KS
DRAWN: JV
CHECKED: JM

ENGINEERING CERTIFICATION
REGISTERED PROFESSIONAL ENGINEER KYLE SANFORD No. 67819 Exp. 6-30-15 CIVIL STATE OF CALIFORNIA
PRELIMINARY
PROJECT ENGINEER DATE

SAN FRANCISQUITO CREEK JOINT POWERS AUTHORITY
ACCEPTED BY DISTRICT
PROJECT ENGINEER DATE

PROJECT NAME AND SHEET DESCRIPTION:
SAN FRANCISQUITO CREEK FLOOD REDUCTION, ECOSYSTEM RESTORATION, & RECREATION PROJECT
SAN FRANCISQUITO CREEK BOARDWALK FOUNDATION PLAN

SCALE: AS SHOWN
VERIFY SCALES: 0 1" BAR IS ONE INCH ON ORIGINAL DRAWING IF NOT ONE INCH ON THIS SHEET, ADJUST SCALES ACCORDINGLY
PROJECT NUMBER: 26284002
SHEET CODE: S-7
SHEET NUMBER: 89 OF 119

USERNAME: BillShad Tue 08 Jul 2008 09:32am
FILENAME: C:\pwworking\sac\d0171341\S-07 SFCJPA-FP
DOCUMENT NUMBER: CAD_GD-C-3011-XXXXXX

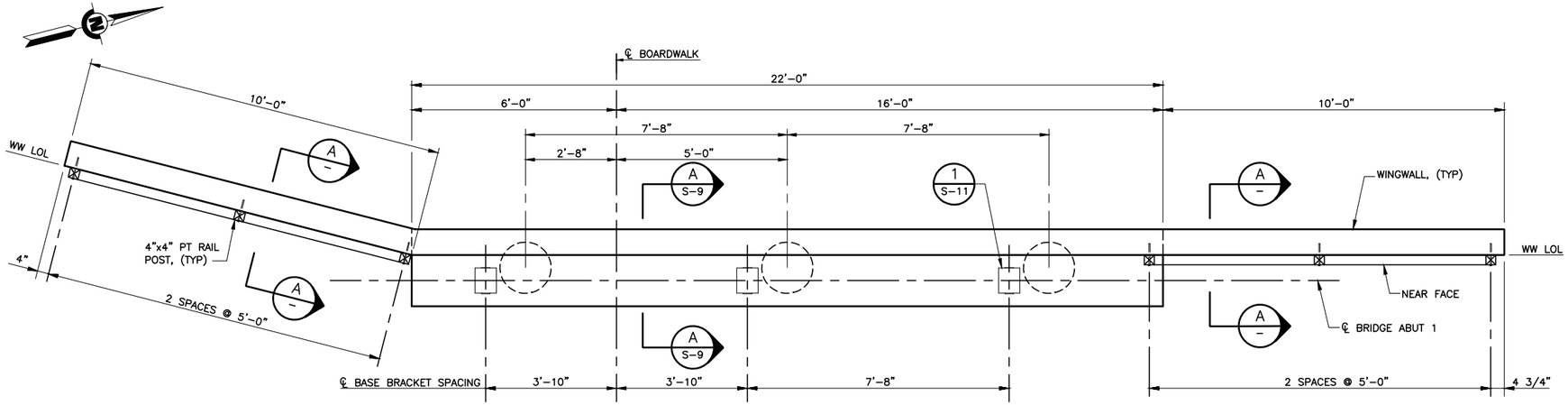

PLAN – ABUTMENT 1

SCALE: 1/2"=1'-0"

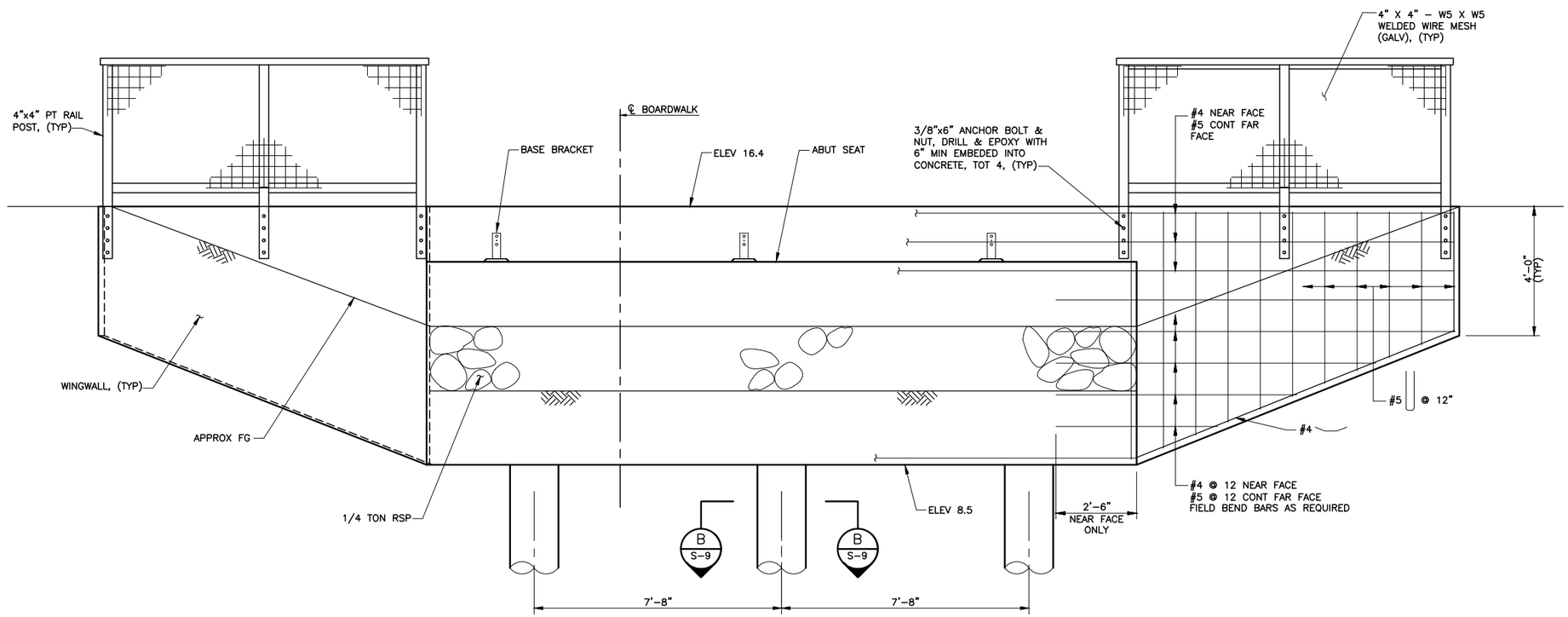

ELEVATION – ABUTMENT 1

SCALE: 1/2"=1'-0"

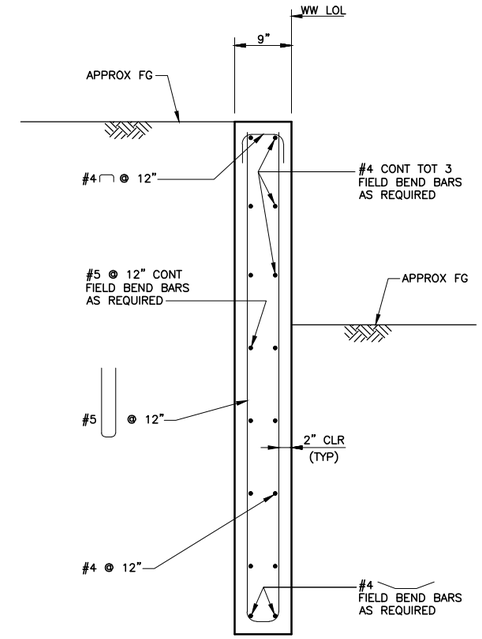

SECTION A – TYPICAL WINGWALL SECTION

SCALE: 1" = 1'-0"

NOTES:

1. NORTH WINGWALL REINF SHOWN, SOUTH WINGWALL REINF SIMILAR.
2. FOR RAILING DETAILS NOT SHOWN, SEE "MISCELLANEOUS DETAILS" SHEET.
3. FOR ABUTMENT TYPICAL SECTION, SEE "ABUTMENT DETAILS NO. 2" SHEET.
4. FOR PILE DETAILS, SEE "ABUTMENT DETAILS NO. 2" SHEET.
5. SEE "GENERAL PLAN" SHEET FOR PLAN AND PROFILE.

REV	DESCRIPTION	DATE	APPR.
	DRAFT 100% AUGUST 2014		

HDR Engineering, Inc.

DATE	
JULY 2014	
DESIGN	KS
DRAWN	JV
CHECKED	JM

ENGINEERING CERTIFICATION

REGISTERED PROFESSIONAL ENGINEER KYLE SANFORD No. C77819 Exp. 12-30-15 CIVIL STATE OF CALIFORNIA

PRELIMINARY

PROJECT ENGINEER DATE

SAN FRANCISQUITO CREEK JOINT POWERS AUTHORITY

ACCEPTED BY DISTRICT

PROJECT ENGINEER DATE

PROJECT NAME AND SHEET DESCRIPTION:

SAN FRANCISQUITO CREEK FLOOD REDUCTION, ECOSYSTEM RESTORATION, & RECREATION PROJECT

SAN FRANCISQUITO CREEK BOARDWALK
ABUTMENT DETAILS NO. 1

SCALE: AS SHOWN

VERIFY SCALES: 0 1"
BAR IS ONE INCH ON ORIGINAL DRAWING IF NOT ONE INCH ON THIS SHEET, ADJUST SCALES ACCORDINGLY

PROJECT NUMBER: 26284002

SHEET CODE: S-8

SHEET NUMBER: 90 OF 119

USERNAME: BillShad Tue 08 Jul 2008 09:32am
FILENAME: C:\pwworking\sac\d0171341\S-08 SFCJPA-A1
DOCUMENT NUMBER: CAD_GD-C-3011-XXXXXX

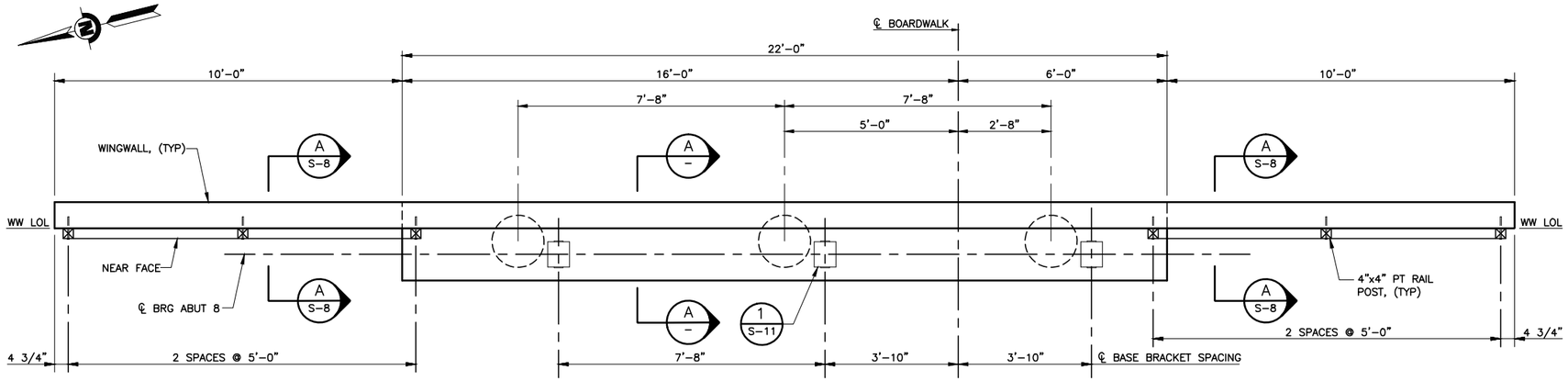

PLAN – ABUTMENT 8

SCALE: 1/2"=1'-0"

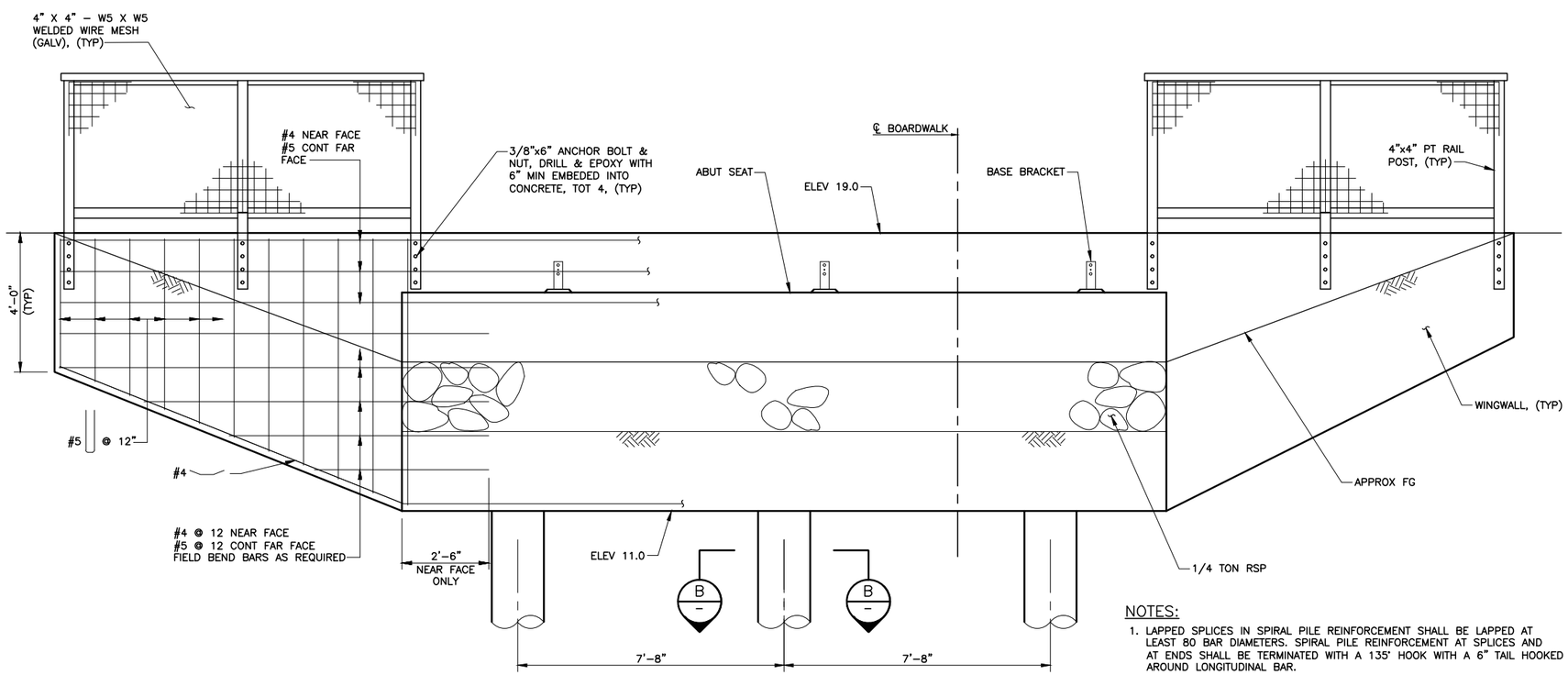

ELEVATION – ABUTMENT 8

SCALE: 1/2"=1'-0"

NOTES:

1. LAPPED SPLICES IN SPIRAL PILE REINFORCEMENT SHALL BE LAPPED AT LEAST 80 BAR DIAMETERS. SPIRAL PILE REINFORCEMENT AT SPLICES AND AT ENDS SHALL BE TERMINATED WITH A 135° HOOK WITH A 6" TAIL HOOKED AROUND LONGITUDINAL BAR.
2. NO REINFORCEMENT SPLICES ALLOWED IN MAIN COLUMN/PILE REINFORCEMENT.
3. FOR WINGWALL TYPICAL SECTION, SEE "ABUTMENT DETAILS NO. 1" SHEET.
4. FOR RAILING DETAILS NOT SHOWN, SEE "MISCELLANEOUS DETAILS" SHEET.
5. SEE "GENERAL PLAN" SHEET FOR PLAN AND PROFILE.

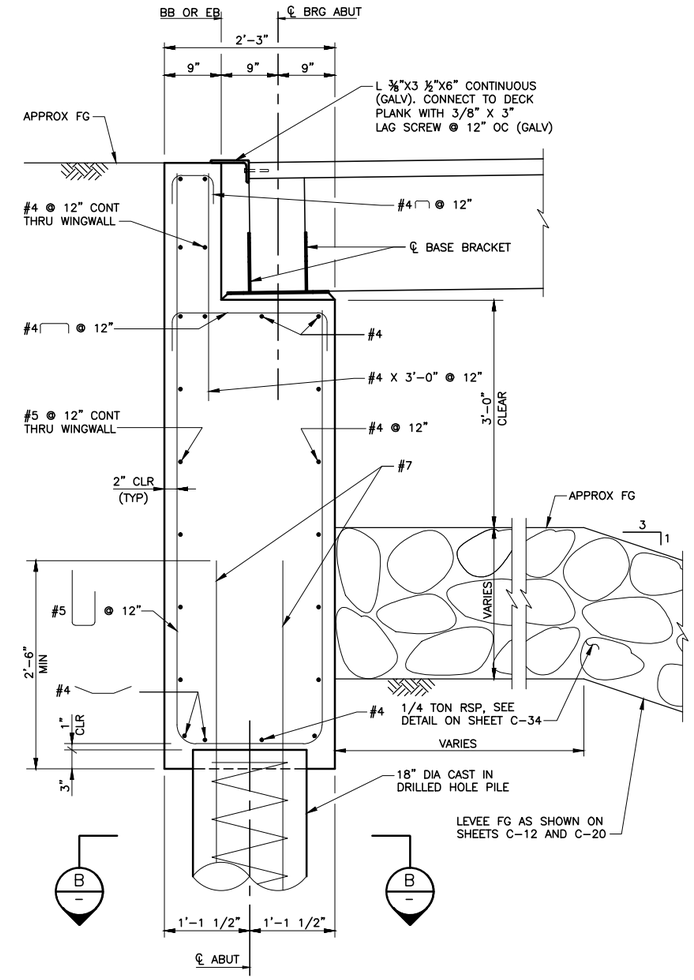

SECTION A – TYPICAL ABUTMENT SECTION

SCALE: 1"=1'-0"

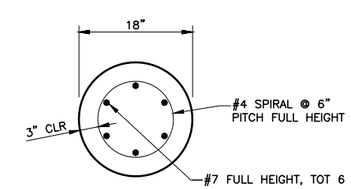

SECTION B – TYPICAL PILE/COLUMN SECTION

SCALE: 1"=1'-0"

REV	DESCRIPTION	DATE	APPR.
	DRAFT 100% AUGUST 2014		

HDR Engineering, Inc.

DATE: JULY 2014
DESIGN: KS
DRAWN: JV
CHECKED: JM

ENGINEERING CERTIFICATION
REGISTERED PROFESSIONAL ENGINEER KYLE SANFORD No. 067819 Exp. 12-30-15 CIVIL STATE OF CALIFORNIA
PRELIMINARY
PROJECT ENGINEER DATE

SAN FRANCISQUITO CREEK JOINT POWERS AUTHORITY
ACCEPTED BY DISTRICT
PROJECT ENGINEER DATE

PROJECT NAME AND SHEET DESCRIPTION:
SAN FRANCISQUITO CREEK FLOOD REDUCTION, ECOSYSTEM RESTORATION, & RECREATION PROJECT
SAN FRANCISQUITO CREEK BOARDWALK ABUTMENT DETAILS NO. 2

SCALE: AS SHOWN
VERIFY SCALES: 0 1"
BAR IS ONE INCH ON ORIGINAL DRAWING IF NOT ONE INCH ON THIS SHEET, ADJUST SCALES ACCORDINGLY

PROJECT NUMBER: 26284002
SHEET CODE: S-9
SHEET NUMBER: 91 OF 119

DOCUMENT NUMBER: CAD_GD-C-3011-XXXXXX

USERNAME: BillShad Tue 08 Jul 2008 09:32am
FILENAME: C:\pwworking\sec\d0171341\S-09 SFCJPA-A2

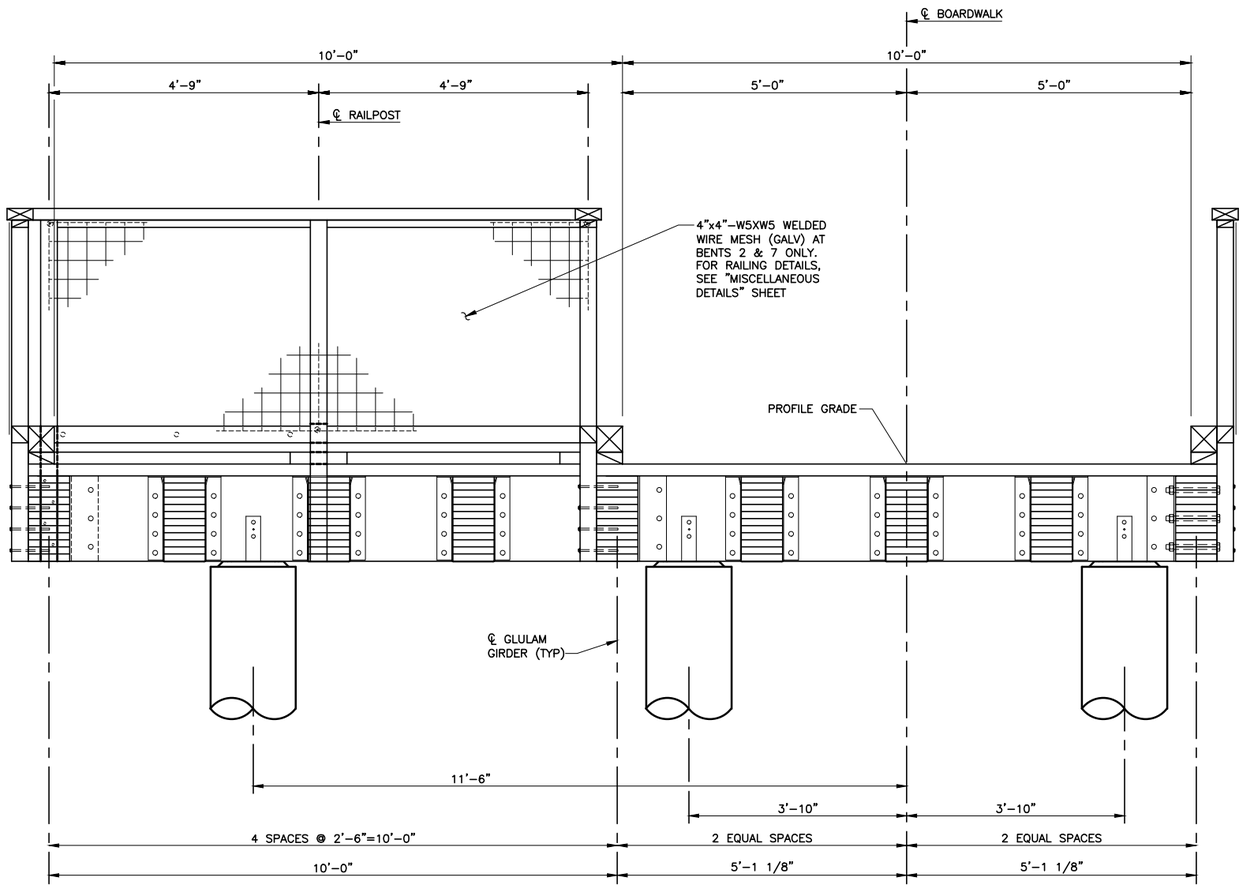

NOTE:
SECTION AT BENT 2 SHOWN LOOKING UPSTATION,
SECTION AT BENT 7 AND ABUTMENTS 1 & 8 SIMILAR.

TYPICAL SECTION AT BENT 2

SCALE: 3/4"=1'-0"

FOR INFORMATION NOT SHOWN, SEE "SECTION AT BENTS 3-6".

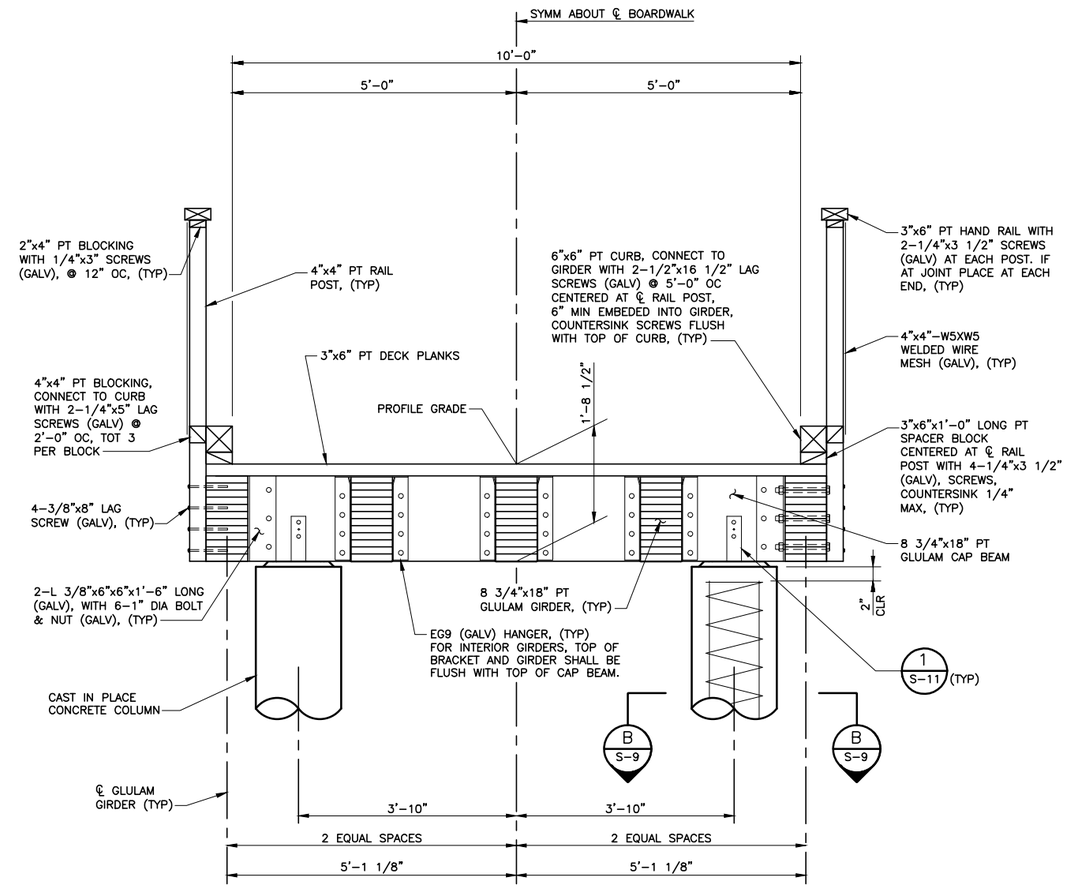

TYPICAL SECTION AT BENTS 3-6

SCALE: 3/4"=1'-0"

USERNAME: BillShad Tue 08 Jul 2008 09:32am
FILENAME: C:\pwworking\sac\d0171341\S-10 SFCJPA-TS

DOCUMENT NUMBER: CAD_GD-C-3011-XXXXXX

REV	DESCRIPTION	DATE	APPR.
	DRAFT 100% AUGUST 2014		

HDR Engineering, Inc.

DATE	
JULY 2014	
DESIGN	KS
DRAWN	JV
CHECKED	JM

ENGINEERING CERTIFICATION

REGISTERED PROFESSIONAL ENGINEER — KYLE SANFORD — No. 037819 — Exp. 9-30-15 — CIVIL — STATE OF CALIFORNIA

PRELIMINARY

PROJECT ENGINEER DATE

SAN FRANCISQUITO CREEK JOINT POWERS AUTHORITY

ACCEPTED BY DISTRICT

PROJECT ENGINEER DATE

PROJECT NAME AND SHEET DESCRIPTION:

SAN FRANCISQUITO CREEK FLOOD REDUCTION, ECOSYSTEM RESTORATION, & RECREATION PROJECT

SAN FRANCISQUITO CREEK BOARDWALK
TYPICAL SECTIONS

SCALE	PROJECT NUMBER
AS SHOWN	26284002
VERIFY SCALES 0 1" BAR IS ONE INCH ON ORIGINAL DRAWING IF NOT ONE INCH ON THIS SHEET, ADJUST SCALES ACCORDINGLY	SHEET CODE: S-10
	SHEET NUMBER: 92 OF 119

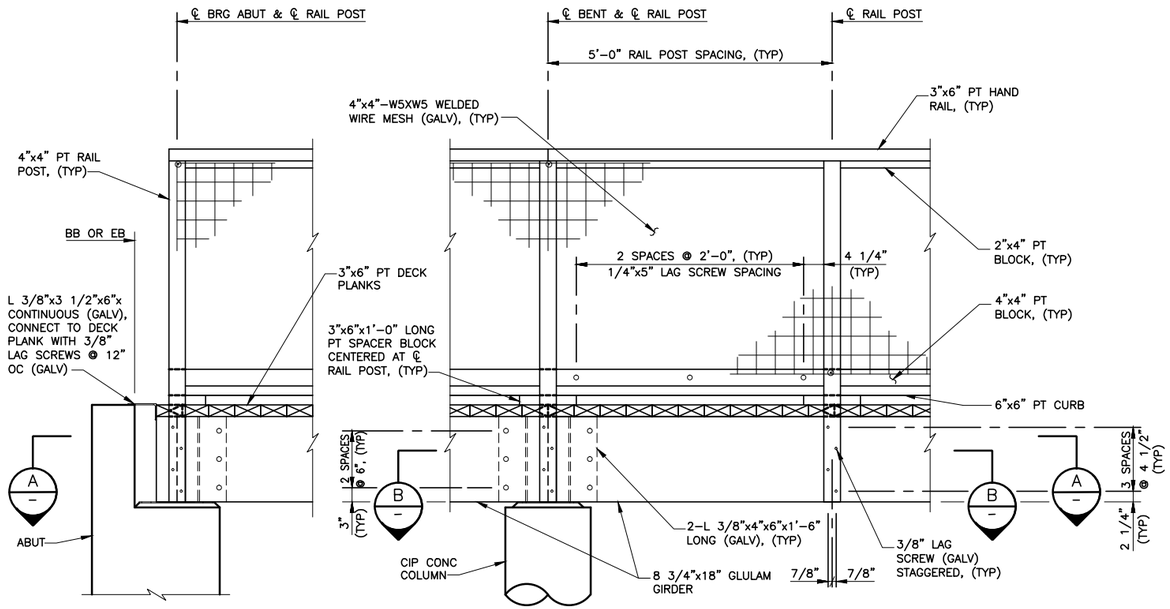

PARTIAL ELEVATION

SCALE: 3/4"=1'-0"

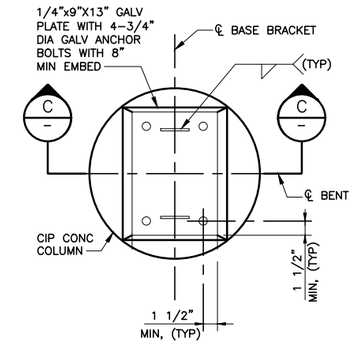

AT BENT

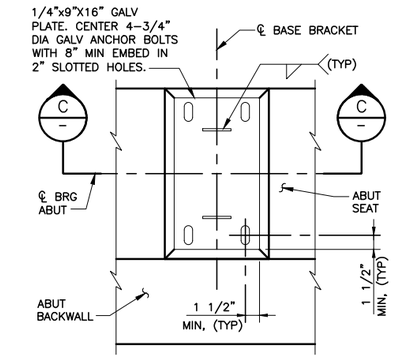

AT ABUTMENT

DETAIL 1 BASE BRACKET

SCALE: 1 1/2" = 1'-0"

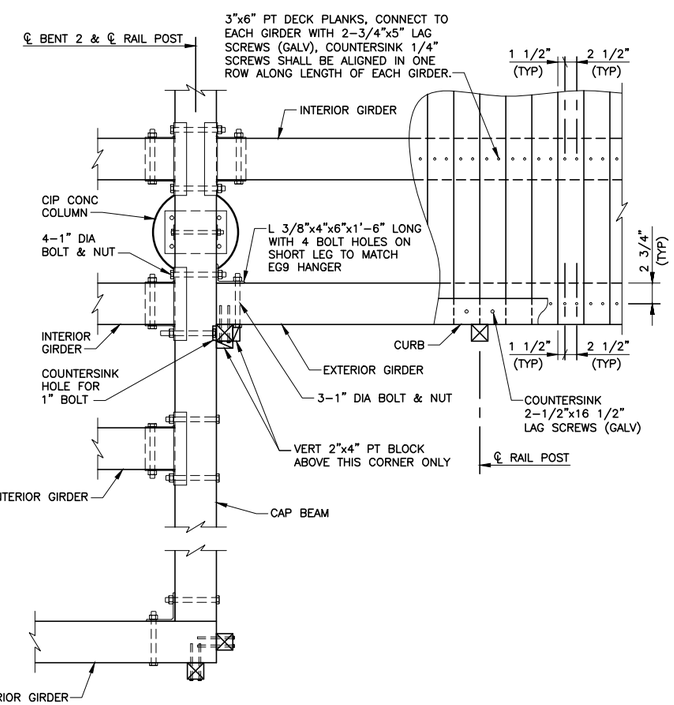

NOTE: FOR INFORMATION NOT SHOWN, SEE "SECTION A".

SECTION B PARTIAL PLAN AT BENT 2

SCALE: 3/4"=1'-0" BENT 7 SIMILAR

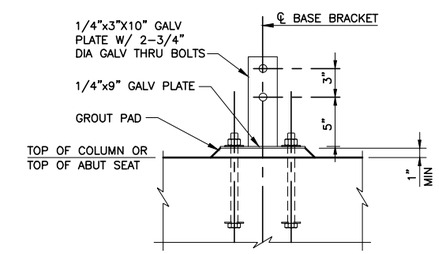

SECTION C THRU BASE BRACKET

SCALE: 1 1/2" = 1'-0"

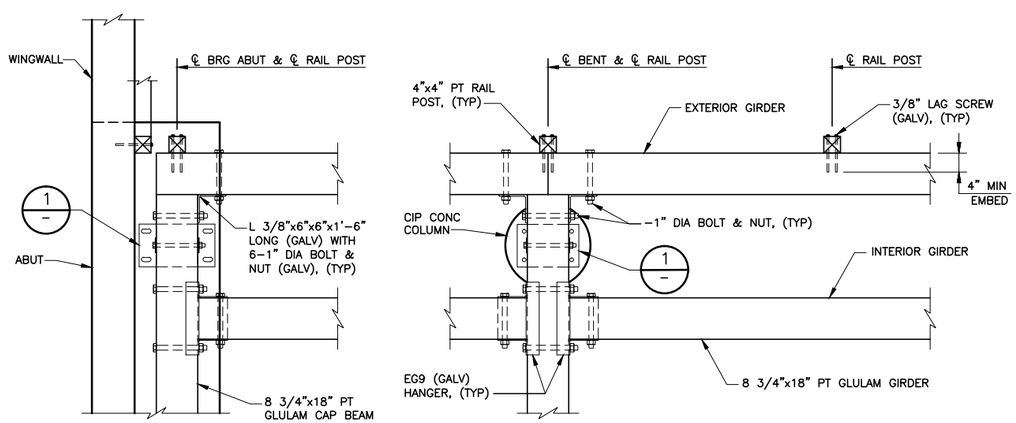

NOTE:
SEE SECTION B FOR PT PLANK DETAILS.

SECTION A PARTIAL PLAN

SCALE: 3/4"=1'-0"

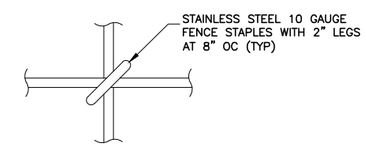

TYPICAL WIRE CONNECTION DETAIL

NO SCALE

REV	DESCRIPTION	DATE	APPR.
	DRAFT 100% AUGUST 2014		

HDR Engineering, Inc.

DATE: JULY 2014
DESIGN: KS
DRAWN: JV
CHECKED: JM

ENGINEERING CERTIFICATION
REGISTERED PROFESSIONAL ENGINEER KYLE SANFORD No. 027819 Exp. 6-30-15 CIVIL STATE OF CALIFORNIA
PRELIMINARY
PROJECT ENGINEER DATE

SAN FRANCISQUITO CREEK JOINT POWERS AUTHORITY
ACCEPTED BY DISTRICT
PROJECT ENGINEER DATE

PROJECT NAME AND SHEET DESCRIPTION:
SAN FRANCISQUITO CREEK FLOOD REDUCTION, ECOSYSTEM RESTORATION, & RECREATION PROJECT
SAN FRANCISQUITO CREEK BOARDWALK
MISCELLANEOUS DETAILS

SCALE: AS SHOWN
VERIFY SCALES: 0 1"
BAR IS ONE INCH ON ORIGINAL DRAWING IF NOT ONE INCH ON THIS SHEET, ADJUST SCALES ACCORDINGLY

PROJECT NUMBER: 26284002
SHEET CODE: S-11
SHEET NUMBER: 93 OF 119

DOCUMENT NUMBER: CAD_GD-C-3011-XXXXXX

USERNAME: BillShad Tue 08 Jul 2008 09:32am
FILENAME: C:\pwworking\sac\d0171341\S-11 SFCJPA-MD

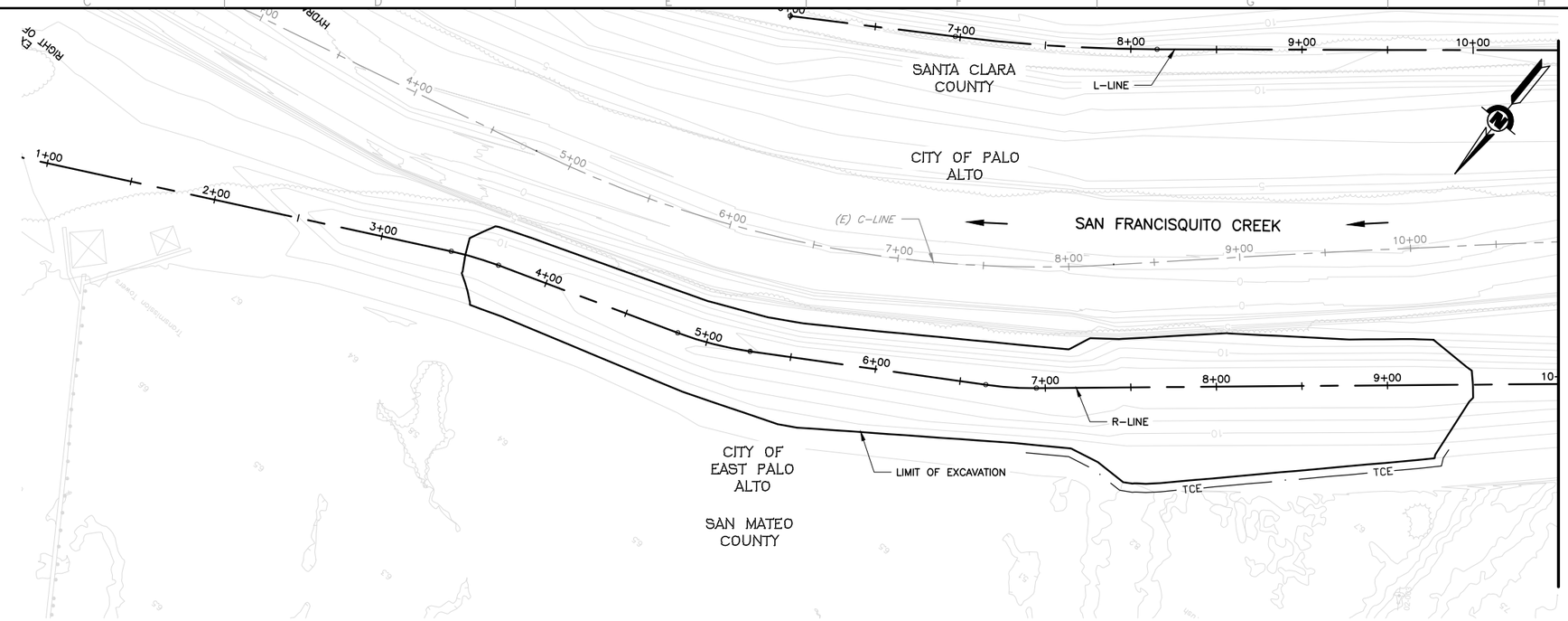

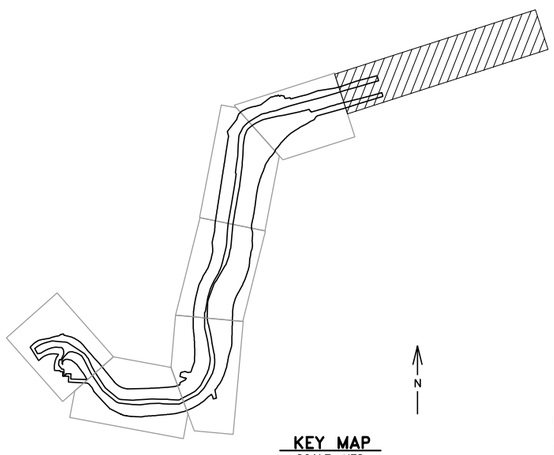

KEY MAP
SCALE: NTS

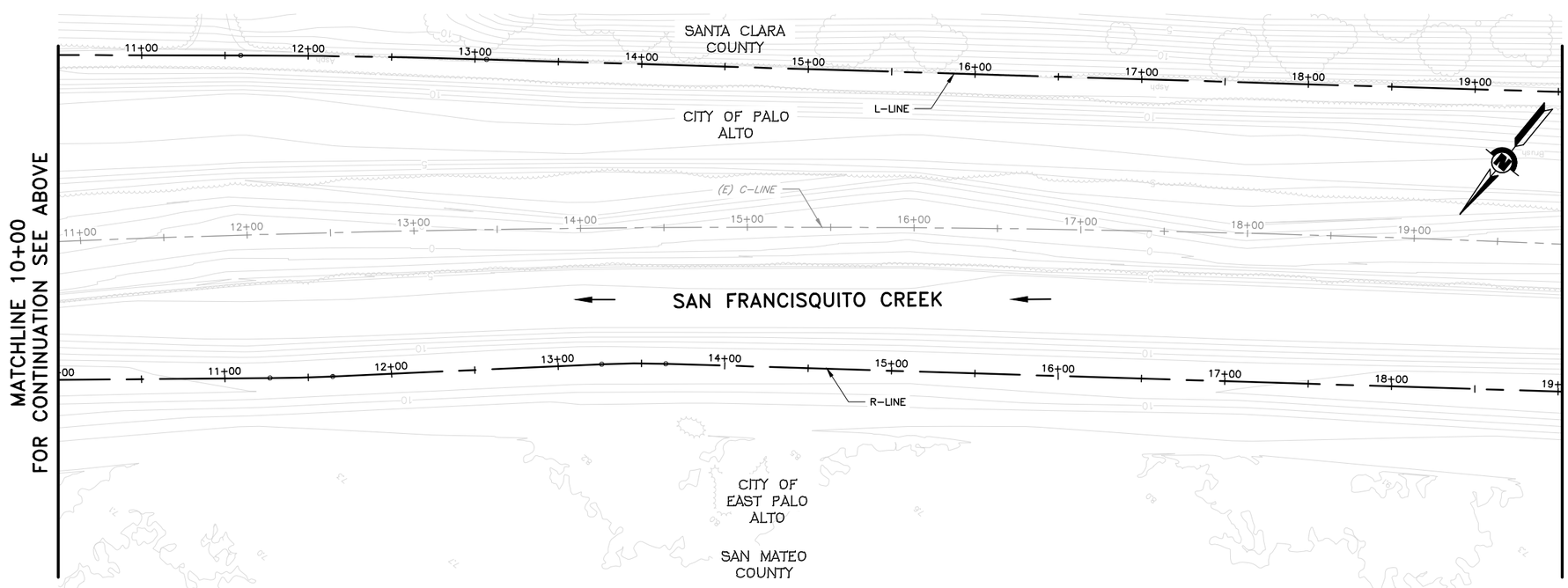

LEGEND:

- HIGH MARSH TRANSITION PLANTING ZONE
- HIGH MARSH PLANTING ZONE
- EROSION CONTROL SEED MIX
- ROCK SLOPE PROTECTION

SHEET NOTES:

1. SEE SHEET L-8 AND L-9 FOR PLANTING PALETTE AND DETAILS.
2. HIGH MARSH AND HIGH MARSH TRANSITION PLANT QUANTITIES ARE SHOWN PER SHEET (L-1 TO L-7).

REV	DESCRIPTION	DATE	APPR.
	DRAFT 100% AUGUST 2014		

ICF INTERNATIONAL

DATE	JULY 2014
DESIGN	K. LANTZ
DRAWN	L. HOANG
CHECKED	K. MACKAY

LANDSCAPE ARCHITECT
LANDSCAPE ARCHITECT STAMP
PROJECT ENGINEER DATE

SAN FRANCISQUITO CREEK JOINT POWERS AUTHORITY
ACCEPTED BY DISTRICT
PROJECT ENGINEER DATE

PROJECT NAME AND SHEET DESCRIPTION:
SAN FRANCISQUITO CREEK FLOOD REDUCTION, ECOSYSTEM RESTORATION, & RECREATION PROJECT
PLANTING PLAN (R-LINE) STATION 9+00 TO 19+00

SCALE: 1" = 40'
VERIFY SCALES: 0 1"
BAR IS ONE INCH ON ORIGINAL DRAWING IF NOT ONE INCH ON THIS SHEET, ADJUST SCALES ACCORDINGLY

PROJECT NUMBER: 26284002
SHEET CODE: L-1
SHEET NUMBER: 94 OF 119

DOCUMENT NUMBER: SFC_LP-C-1028-XXXXXXX

USERNAME: BillShad Tue 08 Jul 2008 09:32am
FILENAME: C:\pwworking\sac\d0171341\L-1_L-9

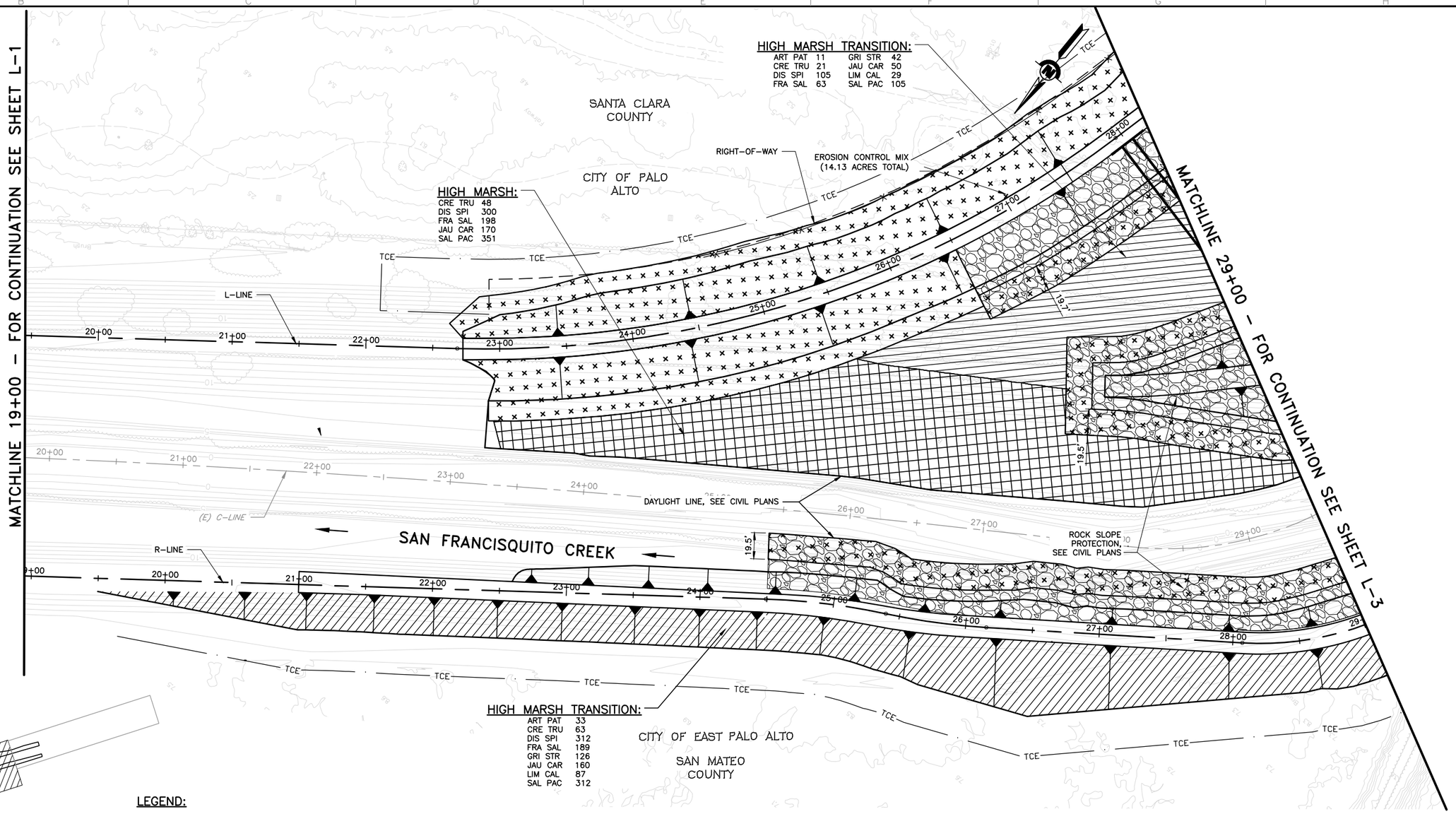

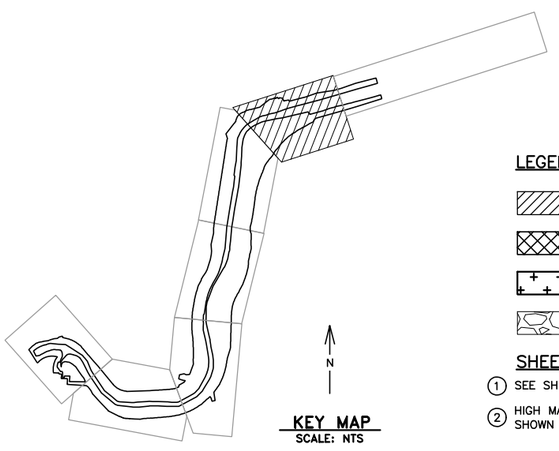

KEY MAP
SCALE: NTS

LEGEND:

- HIGH MARSH TRANSITION PLANTING ZONE
- HIGH MARSH PLANTING ZONE
- EROSION CONTROL SEED MIX
- ROCK SLOPE PROTECTION

SHEET NOTES:

1. SEE SHEET L-8 AND L-9 FOR PLANTING PALETTE AND DETAILS.
2. HIGH MARSH AND HIGH MARSH TRANSITION PLANT QUANTITIES ARE SHOWN PER SHEET (L-1 TO L-7).

REV	DESCRIPTION	DATE	APPR.
	DRAFT 100% AUGUST 2014		

ICF INTERNATIONAL

DATE	JULY 2014
DESIGN	K. LANTZ
DRAWN	L. HOANG
CHECKED	K. MACKAY

LANDSCAPE ARCHITECT

LANDSCAPE ARCHITECT STAMP

PROJECT ENGINEER DATE

SAN FRANCISQUITO CREEK JOINT POWERS AUTHORITY

ACCEPTED BY DISTRICT

PROJECT ENGINEER DATE

PROJECT NAME AND SHEET DESCRIPTION:

SAN FRANCISQUITO CREEK FLOOD REDUCTION, ECOSYSTEM RESTORATION, & RECREATION PROJECT

PLANTING PLAN (R-LINE) STATION 19+00 TO 29+00

SCALE: 1" = 40'

VERIFY SCALES: 0 — 1"
BAR IS ONE INCH ON ORIGINAL DRAWING IF NOT ONE INCH ON THIS SHEET, ADJUST SCALES ACCORDINGLY

PROJECT NUMBER: 26284002

SHEET CODE: L-2

SHEET NUMBER: 95 OF 119

DOCUMENT NUMBER: SFC_LP-C-1028-XXXXXXX

USERNAME: BillShad Tue 08 Jul 2008 09:32am
FILENAME: C:\pwworking\sac\d0171341\L-1_L-9

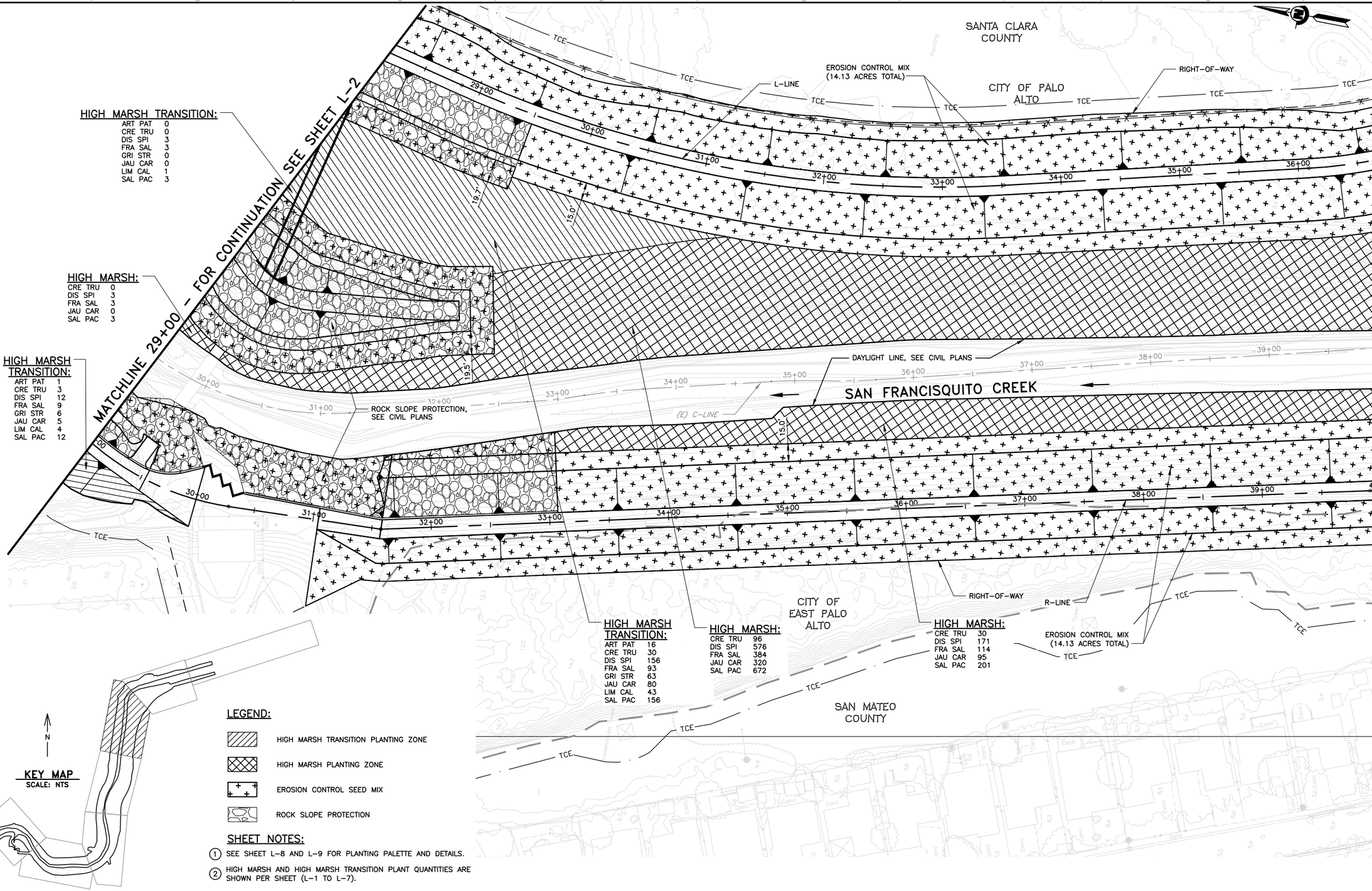

SHEET NOTES:

1. SEE SHEET L–8 AND L–9 FOR PLANTING PALETTE AND DETAILS.
2. HIGH MARSH AND HIGH MARSH TRANSITION PLANT QUANTITIES ARE SHOWN PER SHEET (L–1 TO L–7).

USERNAME: BillShad Tue 08 Jul 2008 09:32am
FILENAME: C:\pwworking\sac\d0171341\L-1_L-9

DOCUMENT NUMBER: SFC_LP–C–1028–XXXXXXX

REV	DESCRIPTION	DATE	APPR.
	DRAFT 100% AUGUST 2014		

ICF INTERNATIONAL

DATE	LANDSCAPE ARCHITECT
JULY 2014	LANDSCAPE ARCHITECT STAMP
DESIGN: K. LANTZ	
DRAWN: L. HOANG	
CHECKED: K. MACKAY	PROJECT ENGINEER DATE

SAN FRANCISQUITO CREEK JOINT POWERS AUTHORITY

ACCEPTED BY DISTRICT

PROJECT ENGINEER DATE

PROJECT NAME AND SHEET DESCRIPTION:

SAN FRANCISQUITO CREEK FLOOD REDUCTION, ECOSYSTEM RESTORATION, & RECREATION PROJECT

PLANTING PLAN (R–LINE) STATION 29+00 TO 40+00

SCALE: 1" = 40'

VERIFY SCALES: 0 1" BAR IS ONE INCH ON ORIGINAL DRAWING IF NOT ONE INCH ON THIS SHEET, ADJUST SCALES ACCORDINGLY

PROJECT NUMBER: 26284002

SHEET CODE: L–3

SHEET NUMBER: 96 OF 119

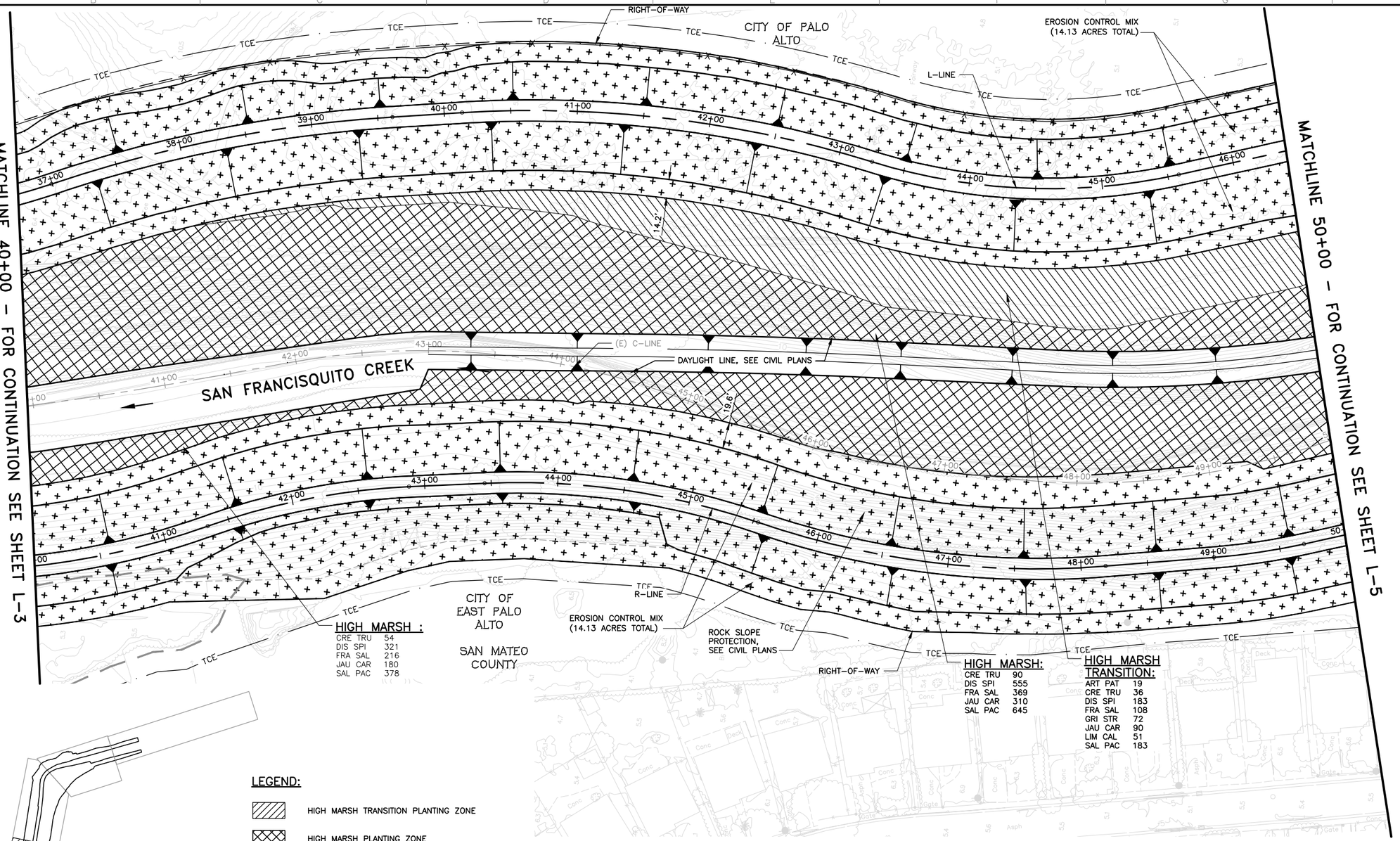

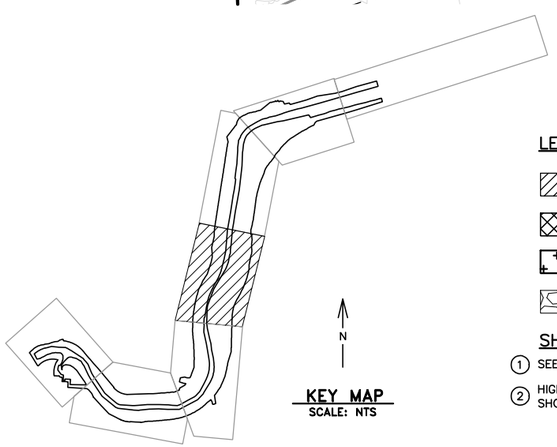

KEY MAP
SCALE: NTS

LEGEND:

- HIGH MARSH TRANSITION PLANTING ZONE
- HIGH MARSH PLANTING ZONE
- EROSION CONTROL SEED MIX
- ROCK SLOPE PROTECTION

SHEET NOTES:

1. SEE SHEET L-8 AND L-9 FOR PLANTING PALETTE AND DETAILS.
2. HIGH MARSH AND HIGH MARSH TRANSITION PLANT QUANTITIES ARE SHOWN PER SHEET (L-1 TO L-7).

REV	DESCRIPTION	DATE	APPR.
	DRAFT 100% AUGUST 2014		

ICF INTERNATIONAL

DATE	JULY 2014
DESIGN	K. LANTZ
DRAWN	L. HOANG
CHECKED	K. MACKAY

LANDSCAPE ARCHITECT
LANDSCAPE ARCHITECT STAMP
PROJECT ENGINEER DATE

SAN FRANCISQUITO CREEK JOINT POWERS AUTHORITY
ACCEPTED BY DISTRICT
PROJECT ENGINEER DATE

PROJECT NAME AND SHEET DESCRIPTION:
SAN FRANCISQUITO CREEK FLOOD REDUCTION, ECOSYSTEM RESTORATION, & RECREATION PROJECT
PLANTING PLAN (R-LINE)
STATION 40+00 TO 50+00

SCALE: 1" = 40'
VERIFY SCALES: 0 — 1"
BAR IS ONE INCH ON ORIGINAL DRAWING IF NOT ONE INCH ON THIS SHEET, ADJUST SCALES ACCORDINGLY

PROJECT NUMBER: 26284002
SHEET CODE: L-4
SHEET NUMBER: 97 OF 119

USERNAME: BillShad Tue 08 Jul 2008 09:32am
FILENAME: C:\pwworking\sac\d0171341\L-1_L-9
DOCUMENT NUMBER:SFC_LP-C-1028-XXXXXXX

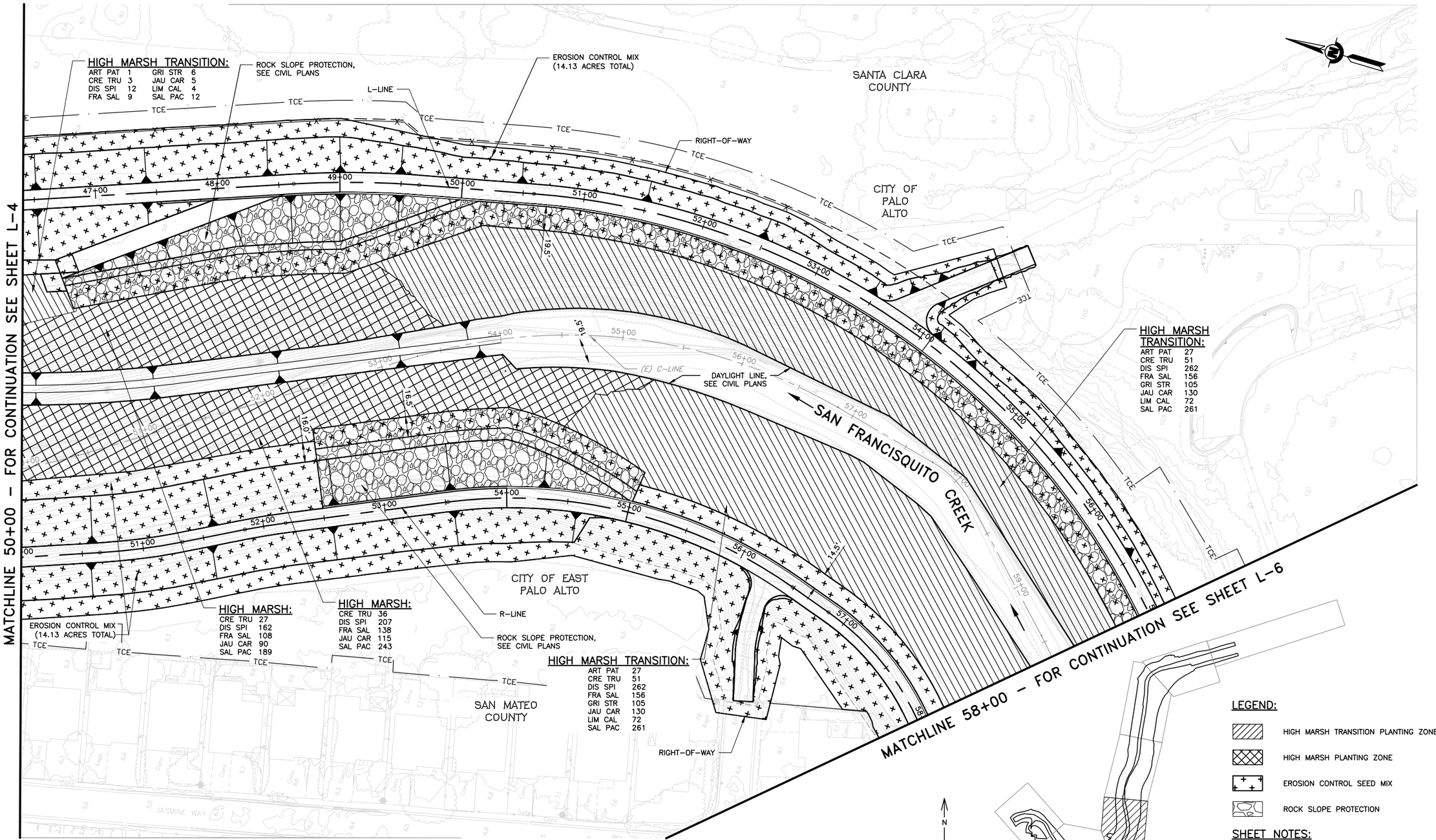

LEGEND:

- HIGH MARSH TRANSITION PLANTING ZONE
- HIGH MARSH PLANTING ZONE
- EROSION CONTROL SEED MIX
- ROCK SLOPE PROTECTION

SHEET NOTES:

1. SEE SHEET L-8 AND L-9 FOR PLANTING PALETTE AND DETAILS.
2. HIGH MARSH AND HIGH MARSH TRANSITION PLANT QUANTITIES ARE SHOWN PER SHEET (L-1 TO L-7).

REV	DESCRIPTION	DATE	APPR.
	DRAFT 100% AUGUST 2014		

ICF INTERNATIONAL

DATE	JULY 2014
DESIGN	K. LANTZ
DRAWN	L. HOANG
CHECKED	K. MACKAY

LANDSCAPE ARCHITECT

LANDSCAPE ARCHITECT STAMP

PROJECT ENGINEER DATE

SAN FRANCISQUITO CREEK JOINT POWERS AUTHORITY

ACCEPTED BY DISTRICT

PROJECT ENGINEER DATE

PROJECT NAME AND SHEET DESCRIPTION:

SAN FRANCISQUITO CREEK FLOOD REDUCTION, ECOSYSTEM RESTORATION, & RECREATION PROJECT

PLANTING PLAN (R-LINE) STATION 50+00 TO 58+00

SCALE: 1" = 40'

VERIFY SCALES: 0 — 1"

BAR IS ONE INCH ON ORIGINAL DRAWING IF NOT ONE INCH ON THIS SHEET, ADJUST SCALES ACCORDINGLY

PROJECT NUMBER: 26284002

SHEET CODE: L-5

SHEET NUMBER: 98 OF 119

DOCUMENT NUMBER: SFC_LP-C-1028-XXXXXXX

USERNAME: BillShad Tue 08 Jul 2008 09:32am
FILENAME: C:\pwworking\sac\d0171341\L-1_L-9

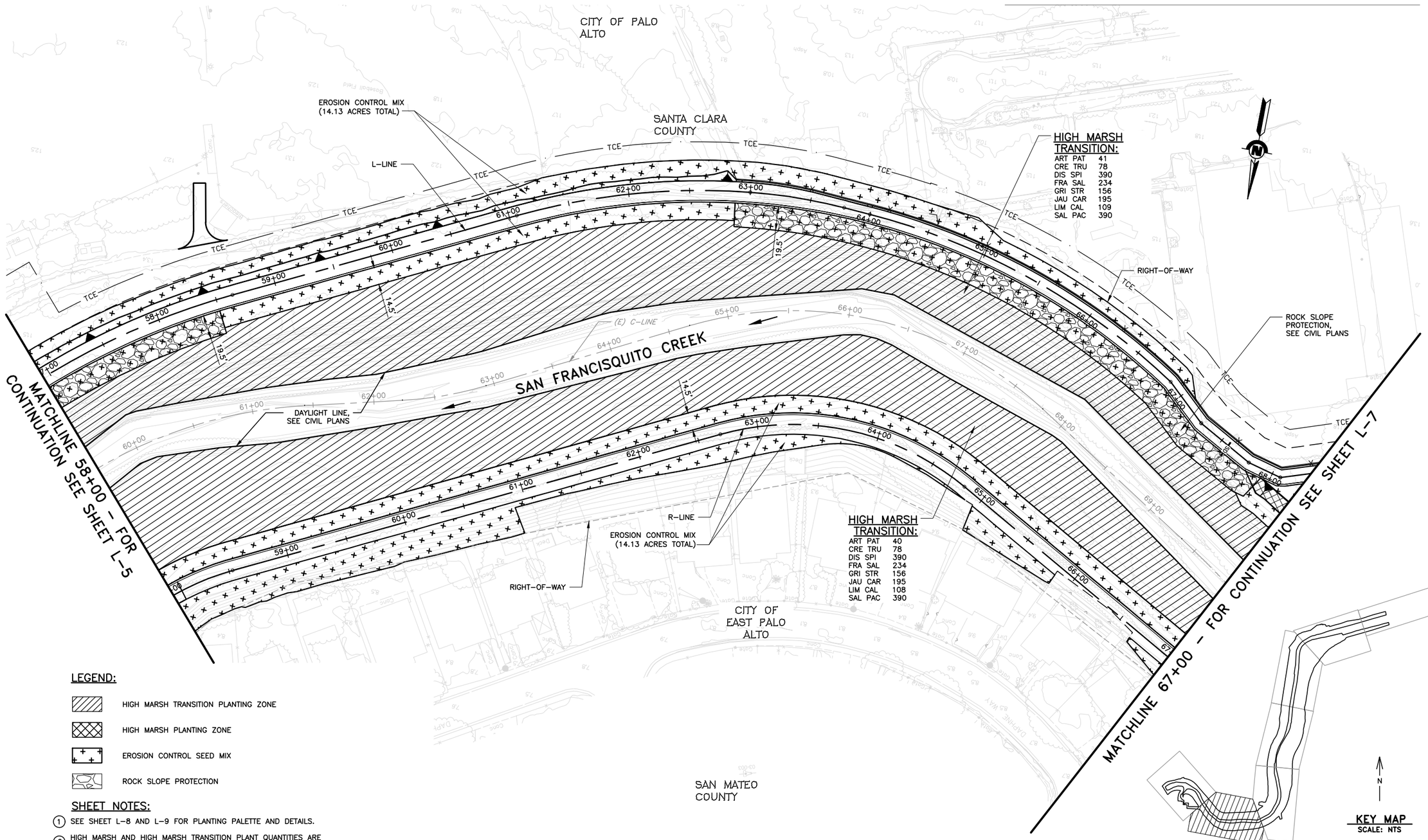

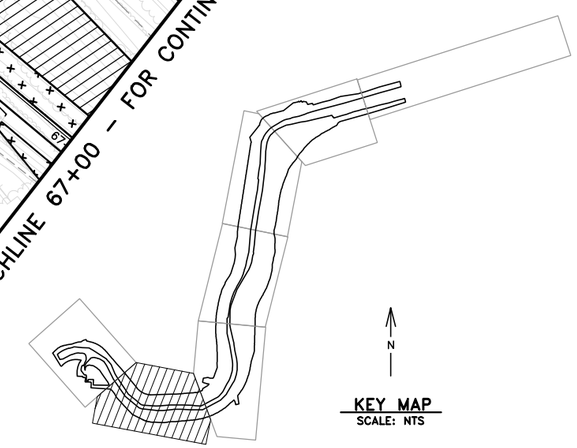

KEY MAP
SCALE: NTS

LEGEND:

- HIGH MARSH TRANSITION PLANTING ZONE
- HIGH MARSH PLANTING ZONE
- EROSION CONTROL SEED MIX
- ROCK SLOPE PROTECTION

SHEET NOTES:

1. SEE SHEET L-8 AND L-9 FOR PLANTING PALETTE AND DETAILS.
2. HIGH MARSH AND HIGH MARSH TRANSITION PLANT QUANTITIES ARE SHOWN PER SHEET (L-1 TO L-7).

REV	DESCRIPTION	DATE	APPR.
	DRAFT 100% AUGUST 2014		

ICF INTERNATIONAL

DATE	JULY 2014
DESIGN	K. LANTZ
DRAWN	L. HOANG
CHECKED	K. MACKAY

LANDSCAPE ARCHITECT
LANDSCAPE ARCHITECT STAMP
PROJECT ENGINEER DATE

SAN FRANCISQUITO CREEK JOINT POWERS AUTHORITY
ACCEPTED BY DISTRICT
PROJECT ENGINEER DATE

PROJECT NAME AND SHEET DESCRIPTION:
SAN FRANCISQUITO CREEK FLOOD REDUCTION, ECOSYSTEM RESTORATION, & RECREATION PROJECT
PLANTING PLAN (R-LINE) STATION 58+00 TO 67+00

SCALE: 1" = 40'
VERIFY SCALES: 0 — 1"
BAR IS ONE INCH ON ORIGINAL DRAWING IF NOT ONE INCH ON THIS SHEET, ADJUST SCALES ACCORDINGLY

PROJECT NUMBER: 26284002
SHEET CODE: L-6
SHEET NUMBER: 99 OF 119

DOCUMENT NUMBER: SFC_LP-C-1028-XXXXXXX

USERNAME: BillShad Tue 08 Jul 2008 09:32am
FILENAME: C:\pwworking\sac\d0171341\L-1_L-9

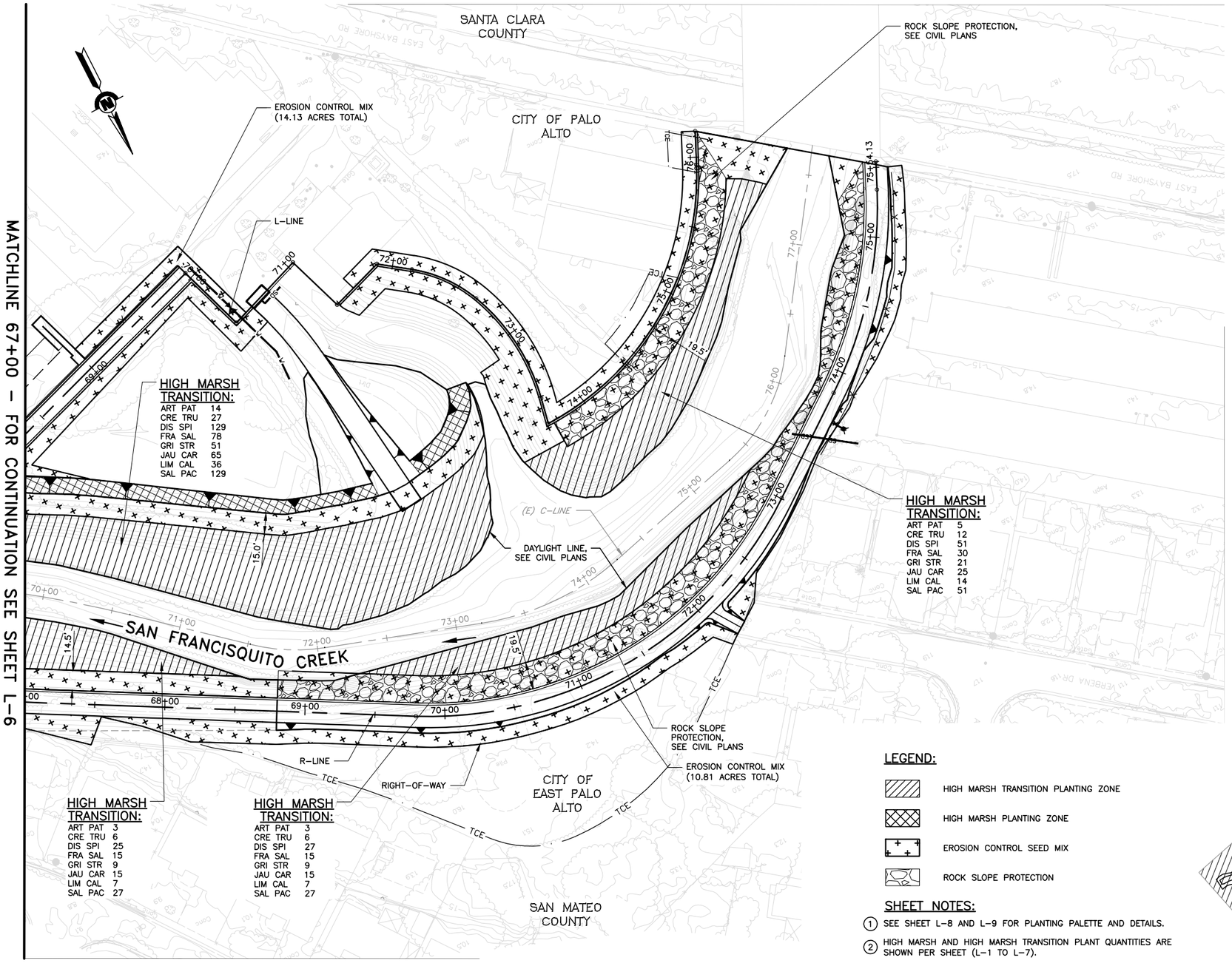

LEGEND:

- HIGH MARSH TRANSITION PLANTING ZONE
- HIGH MARSH PLANTING ZONE
- EROSION CONTROL SEED MIX
- ROCK SLOPE PROTECTION

SHEET NOTES:

1. SEE SHEET L-8 AND L-9 FOR PLANTING PALETTE AND DETAILS.
2. HIGH MARSH AND HIGH MARSH TRANSITION PLANT QUANTITIES ARE SHOWN PER SHEET (L-1 TO L-7).

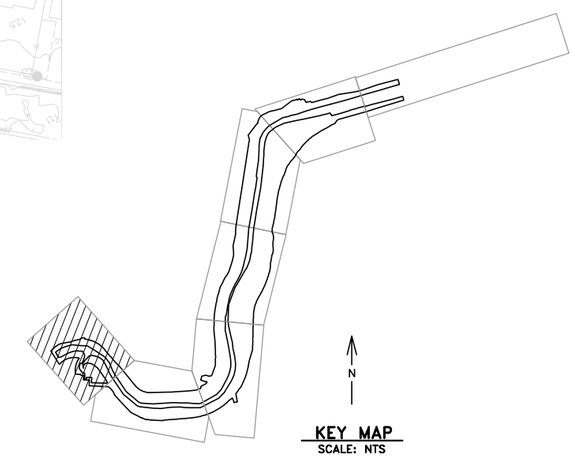

KEY MAP
SCALE: NTS

USERNAME: BillShad Tue 08 Jul 2008 09:32am
FILENAME: C:\pwworking\sac\d0171341\L-1_L-9

DOCUMENT NUMBER:SFC_LP-C-1028-XXXXXXX

REV	DESCRIPTION	DATE	APPR.
	DRAFT 100% AUGUST 2014		

ICF INTERNATIONAL

DATE	
JULY 2014	
DESIGN	K. LANTZ
DRAWN	L. HOANG
CHECKED	K. MACKAY

LANDSCAPE ARCHITECT
LANDSCAPE ARCHITECT STAMP
PROJECT ENGINEER DATE

SAN FRANCISQUITO CREEK JOINT POWERS AUTHORITY
ACCEPTED BY DISTRICT
PROJECT ENGINEER DATE

PROJECT NAME AND SHEET DESCRIPTION:
SAN FRANCISQUITO CREEK FLOOD REDUCTION, ECOSYSTEM RESTORATION, & RECREATION PROJECT
PLANTING PLAN (R-LINE)
STATION 67+00 TO 75+54

SCALE: 1" = 40'
VERIFY SCALES: 0 1"
BAR IS ONE INCH ON ORIGINAL DRAWING IF NOT ONE INCH ON THIS SHEET, ADJUST SCALES ACCORDINGLY

PROJECT NUMBER: 26284002
SHEET CODE: L-7
SHEET NUMBER: 100 OF 119

GENERAL PLANTING NOTES:

1. SEE TECHNICAL SPECIFICATIONS AND GENERAL NOTES FOR ADDITIONAL INFORMATION TO CONSIDER IN PLANTING INSTALLATION INCLUDING INFRASTRUCTURE AND UTILITIES PROTECTION AND REPAIR INFORMATION.
2. ALL SEED AND CONTAINER PLANT MATERIAL WILL BE SUPPLIED BY THE DISTRICT.
3. THE CONTRACTOR SHALL INSTALL ALL PLANTS SHOWN DIAGRAMMATICALLY ON THE DRAWINGS.
4. APPLY A TOPICAL SYSTEMIC HERBICIDE WHERE WEEDS ARE PRESENT PER MANUFACTURER'S SPECIFICATIONS AND THE DIRECTION OF THE ENGINEER A MINIMUM OF TEN DAYS PRIOR TO COMMENCEMENT OF ANY PLANTING WORK. WEEDS AND TREES INCLUDING THEIR ROOTS SHALL BE ALLOWED TO COMPLETELY DIE BACK BEFORE PROCEEDING WITH WORK.
5. ALL TREES AND STUMPS DESIGNATED FOR REMOVAL MUST BE CLEARED AND REMOVED FROM THE SITE PRIOR TO PLANTING OR SEEDING.
6. PROTECT ALL EXISTING PLANT MATERIAL TO REMAIN, INCLUDING ANY INDICATED TREES. THE CONTRACTOR SHALL REPLACE, AT NO COST TO OWNER, PLANT MATERIAL INDICATED AS EXISTING ON PLANS THAT IS DAMAGED OR ALLOWED TO DIE AS A RESULT OF THE NEGLIGENCE OF THE CONTRACTOR.
7. PROTECTION FENCING SHALL BE IN PLACE PRIOR TO PLANTING.
8. CONTRACTOR SHALL MAINTAIN ALL PLANTING WORK FOR A PERIOD OF 3 CONTINUOUS CALENDAR YEARS (ESTABLISHMENT MAINTENANCE). THE 3-YEAR MAINTENANCE PERIOD SHALL BEGIN IMMEDIATELY FOLLOWING THE FINAL ACCEPTANCE OF THE INSTALLATION.
9. ALL CONTAINER PLANTS MUST BE PLANTED WITHIN 3 WORKING DAYS FOLLOWING DELIVERY TO THE SITE. THE CONTRACTOR SHALL BE RESPONSIBLE FOR WATERING AND PROTECTING ALL PLANTS AND MATERIALS STORED ON-SITE.
10. THE ENGINEER SHALL FLAG ALL CONTAINER PLANT LOCATIONS PRIOR TO EXCAVATING PLANTING HOLES FOR APPROVAL BY THE ENGINEER.
11. PLANTING AND SEEDING SHALL ONLY OCCUR WHEN ENVIRONMENTAL CONDITIONS ARE FAVORABLE FOR SUCH ACTIVITIES, BASED ON STANDARD HORTICULTURAL PRACTICES. PLANTING OR SEEDING SHALL NOT TAKE PLACE IF TEMPERATURES ARE UNSEASONABLY HIGH OR IF THE SITE IS EXCESSIVELY WET OR MUDDY.
12. CONTAINER PLANTS SHALL BE PLANTED PER DETAIL(S), AND SHALL BE WATERED IN THOROUGHLY IMMEDIATELY AFTER BEING PLANTED.
13. SEEDING SHALL OCCUR ONLY AFTER THE ENGINEER HAS OBSERVED AND APPROVED THAT THE SITE HAS BEEN PROPERLY PREPARED.
14. SEEDING SHALL BE APPLIED AS INDICATED ON THE DRAWINGS AND SPECIFICATIONS.

RESTORATION PLANTING PROGRAM

SYMBOL	PLANTING ZONE	PLANTING ZONE	PLANT CODE SHOWN ON PLAN SHEETS	SPECIES NAME		AVERAGE PLANT SPACING (FEET ON CENTER)	PERCENTAGE OF PLANT PALETTE	CONTAINER PLANT		PLANTING NOTES
				BOTANICAL NAME	COMMON NAME			SIZE	QUANTITY	
	HIGH MARSH TRANSITION	1/L-9	ATR PAT	ATRIPLEX PATULA	FAT HEN	8' O.C.	5	TREEBAND	279	
		1/L-9 & 2/L-9	CRE TRU	CRESSA TRUXILLENSIS	ALKALI WEED	2' O.C. WITHIN CLUSTERS, 10' O.C. BETWEEN CLUSTERS	5	TREEBAND	537	PLANT IN CLUSTERS OF 3
			DIS SPI	DISTICHLIS SPICATA	SALT GRASS	2' O.C. WITHIN CLUSTERS, 10' O.C. BETWEEN CLUSTERS	25		2682	PLANT IN CLUSTERS OF 3
			FRA SAL	FRANKENIA SALINA	ALKALI HEATH	2' O.C. WITHIN CLUSTERS, 10' O.C. BETWEEN CLUSTERS	15		1608	PLANT IN CLUSTERS OF 3
			GRI STR	GRINDELIA STRICTA	GUMWEED	2' O.C. WITHIN CLUSTERS, 10' O.C. BETWEEN CLUSTERS	10		1074	PLANT IN CLUSTERS OF 3
		1/L-9 & 2/L-9	JAU CAR	JAUMEA CARNOSA	MARSH JAUMEA	2' O.C. WITHIN CLUSTERS, 10' O.C. BETWEEN CLUSTERS	7.5		1340	PLANT IN CLUSTERS OF 5
		1/L-9	LIM CAL	LIMONIUM CALIFORNICUM	WESTERN MARSH ROSEMARY	6' O.C.	7.5		745	
		1/L-9 & 2/L-9	SAL PAC	SALICORNIA PACIFICA	PERENNIAL PICKLEWEED	2' O.C. WITHIN CLUSTERS, 10' O.C. BETWEEN CLUSTERS	25		2682	PLANT IN CLUSTERS OF 3
	HIGH MARSH	1/L-9 & 2/L-9	CRE TRU	CRESSA TRUXILLENSIS	ALKALI WEED	2' O.C. WITHIN CLUSTERS, 10' O.C. BETWEEN CLUSTERS	5	TREEBAND	408	PLANT IN CLUSTERS OF 3
			DIS SPI	DISTICHLIS SPICATA	SALT GRASS	2' O.C. WITHIN CLUSTERS, 10' O.C. BETWEEN CLUSTERS	30		2448	PLANT IN CLUSTERS OF 3
			FRA SAL	FRANKENIA SALINA	ALKALI HEATH	2' O.C. WITHIN CLUSTERS, 10' O.C. BETWEEN CLUSTERS	20		1632	PLANT IN CLUSTERS OF 3
		1/L-9 & 2/L-9	JAU CAR	JAUMEA CARNOSA	MARSH JAUMEA	2' O.C. WITHIN CLUSTERS, 10' O.C. BETWEEN CLUSTERS	10		1360	PLANT IN CLUSTERS OF 5
			SAL PAC	SALICORNIA PACIFICA	PERENNIAL PICKLEWEED	2' O.C. WITHIN CLUSTERS, 10' O.C. BETWEEN CLUSTERS	35		2856	PLANT IN CLUSTERS OF 3

PLANTING PROGRAM NOTES:

1. INDIVIDUAL PLANTS AND CLUSTERS SHALL BE RANDOMLY PLACED AT VARIOUS ON-CENTER SPACINGS, AVERAGE SPACING IS PROVIDED FOR QUANTITY CALCULATION PURPOSES ONLY.
2. PLANT LOCATIONS SHALL BE STAKED BY THE ENGINEER PRIOR TO PLANT INSTALLATION.
3. TREEBAND CONTAINER SIZE SHALL BE 2.25 INCHES SQ. X 5 INCHES LONG.
4. 1-GALLON CONTAINER SIZE SHALL BE 6 INCHES DIA. X 7 INCHES LONG.
5. ALL PLANTING AREAS AND DISTURBED AREAS SHALL BE HYDROSEEDED WITH EROSION CONTROL SEED MIX PER SPECIFICATIONS.

EROSION CONTROL SEED MIX

SYMBOL	PLANTING ZONE	SPECIES NAME		APPLICATION RATE (PLS LBS/ACRE)
		BOTANICAL NAME	COMMON NAME	
	ALL EROSION CONTROL AREAS AND ALL OTHER DISTURBED AREAS	HORDEUM BRACHYANTHERUM	MEADOW BARLEY	10
		HORDEUM DEPRESSUM	ALKALI BARLEY	15
		HORDEUM VULGARE	COMMON BARLEY	30
			TOTAL	55

USERNAME: BillShad Tue 08 Jul 2008 09:32am
FILENAME: C:\pwworking\sac\d0171341\L-1_L-9

DOCUMENT NUMBER:SFC_LP-C-1028-XXXXXXX

REV	DESCRIPTION	DATE	APPR.
	DRAFT 100% AUGUST 2014		

ICF INTERNATIONAL

DATE: JULY 2014
DESIGN: K. LANTZ
DRAWN: L. HOANG
CHECKED: K. MACKAY

LANDSCAPE ARCHITECT
LANDSCAPE ARCHITECT STAMP
PROJECT ENGINEER DATE

SAN FRANCISQUITO CREEK JOINT POWERS AUTHORITY
ACCEPTED BY DISTRICT
PROJECT ENGINEER DATE

PROJECT NAME AND SHEET DESCRIPTION:
SAN FRANCISQUITO CREEK FLOOD REDUCTION, ECOSYSTEM RESTORATION, & RECREATION PROJECT
PLANTING NOTES & PROGRAM

SCALE: NOT TO SCALE
VERIFY SCALES: 0 1"
BAR IS ONE INCH ON ORIGINAL DRAWING IF NOT ONE INCH ON THIS SHEET, ADJUST SCALES ACCORDINGLY

PROJECT NUMBER: 26284002
SHEET CODE: L-8
SHEET NUMBER: 101 OF 119

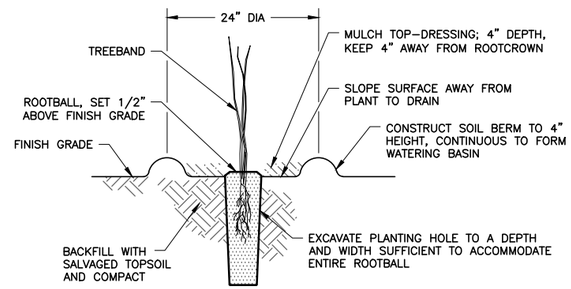

NOTES:

1. PROVIDE WEED FREE ZONE AROUND PLANTING SITE ACCORDING TO THE SPECIFICATIONS.
2. REFER TO DETAIL 2 THIS SHEET FOR CLUSTER PLANTING AND BASIN LAYOUT.
3. REFER TO SPECIFICATIONS AND PLAN SHEETS FOR ADDITIONAL INFORMATION.

DETAIL 1/– TREEBAND CONTAINER PLANTING
NTS

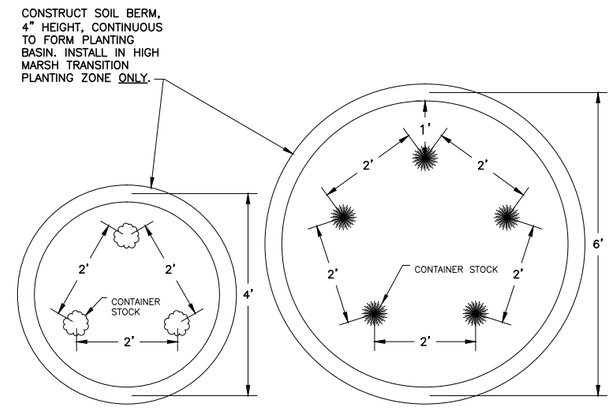

CLUSTERS OF 3

CLUSTERS OF 5

NOTES:

1. PROVIDE WEED FREE ZONE AROUND PLANTING SITE ACCORDING TO THE SPECIFICATIONS.
2. APPLY MULCH TOP-DRESSING TO ALL BASINS, 3" DEPTH, KEEP 4" FROM ROOTCROWNS.
3. PLANT QUANTITIES AND SPACING VARIES BY SPECIES. REFER TO TABLES ABOVE FOR ADDITIONAL INFORMATION.
4. REFER TO SPECIFICATIONS AND PLAN SHEETS FOR ADDITIONAL INFORMATION.

DETAIL 2/– CONTAINER PLANTING IN CLUSTERS
NTS

USERNAME: BillShad Tue 08 Jul 2008 09:32am
FILENAME: C:\pwworking\sac\d0171341\L-1_L-9

DOCUMENT NUMBER:SFC_LP-C-1028-XXXXXXX

REV	DESCRIPTION	DATE	APPR.
	DRAFT 100% AUGUST 2014		

ICF INTERNATIONAL

DATE	JULY 2014
DESIGN	K. LANTZ
DRAWN	L. HOANG
CHECKED	K. MACKAY

LANDSCAPE ARCHITECT
LANDSCAPE ARCHITECT STAMP
PROJECT ENGINEER DATE

SAN FRANCISQUITO CREEK JOINT POWERS AUTHORITY
ACCEPTED BY DISTRICT
PROJECT ENGINEER DATE

PROJECT NAME AND SHEET DESCRIPTION:
SAN FRANCISQUITO CREEK FLOOD REDUCTION, ECOSYSTEM RESTORATION, & RECREATION PROJECT
PLANTING DETAILS

SCALE: NOT TO SCALE
VERIFY SCALES: 0 1"
BAR IS ONE INCH ON ORIGINAL DRAWING IF NOT ONE INCH ON THIS SHEET, ADJUST SCALES ACCORDINGLY

PROJECT NUMBER: 26284002
SHEET CODE: L-9
SHEET NUMBER: 102 OF 119

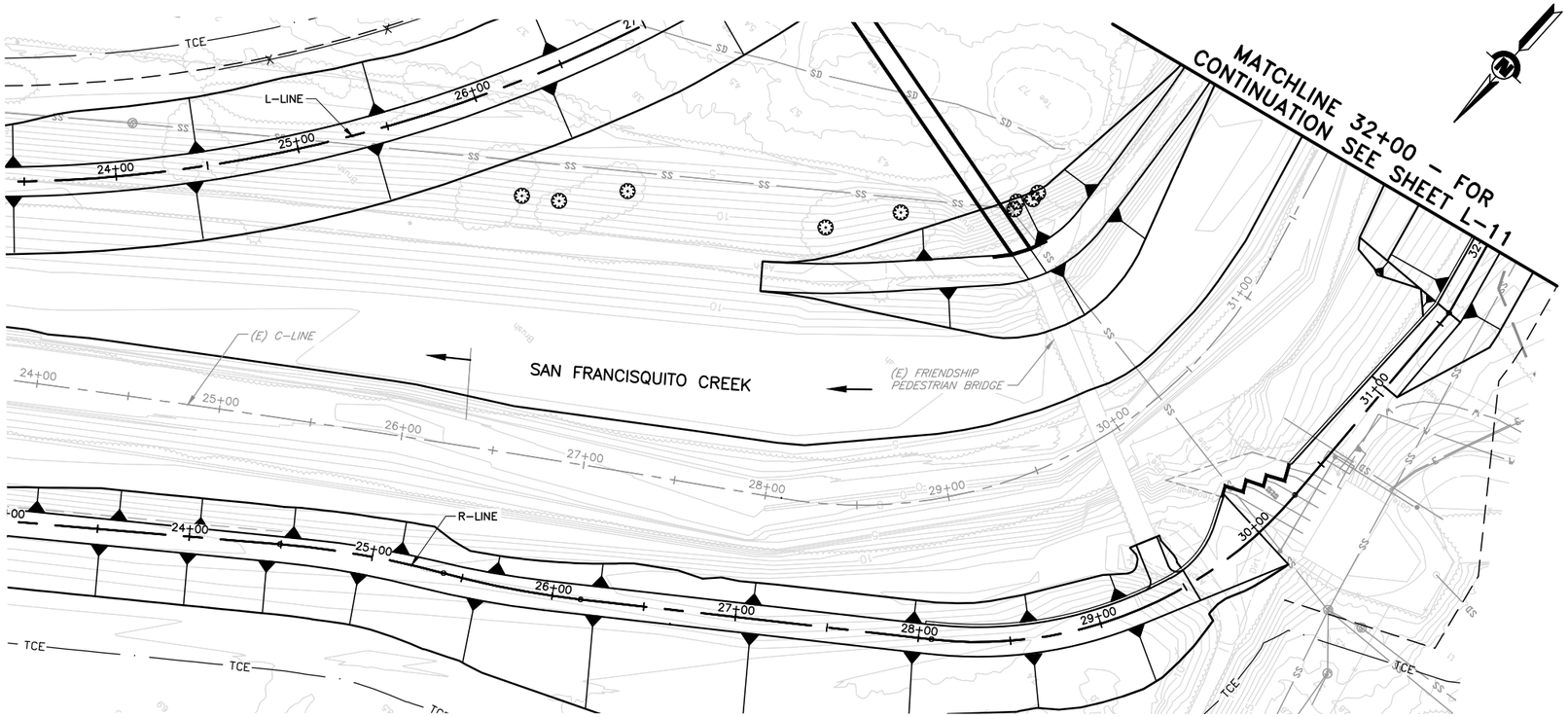

PLAN
SCALE: 1"=40'

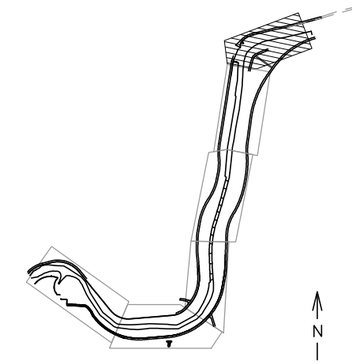

KEY MAP
SCALE: NTS

TREE SURVEY ID	COMMON NAME	DBH CLASS SIZE	EASTING	NORTHING	ALIGNMENT	STATION	OFFSET (FEET)	TREE MANAGEMENT RECOMMENDATION
345L	Italian Stone Pine	6	6090707.81	1994585.81	Left Levee	26+05.61	58.48	REMOVE
346L	Bailey's Acacia	4	6090691.00	1994574.28	Left Levee	26+22.15	68.26	REMOVE
347L	River Sheoak	3	6090667.09	1994545.30	Left Levee	26+55.39	77.63	REMOVE
348L	Monterey Pine	4	6090574.39	1994487.47	Left Levee	27+31.73	143.53	REMOVE
349L	River Sheoak	4	6090549.61	1994454.02	Left Levee	27+64.56	157.47	REMOVE
350L	Pear	2	6090505.20	1994411.20	Left Levee	28+10.53	189.93	INSPECT
351L	Pear	2	6090506.96	1994407.23	Left Levee	28+13.98	187.29	INSPECT
352L	Pear	1	6090501.62	1994400.51	Left Levee	28+21.76	190.91	PROTECT
353L	Pear	2	6090501.76	1994395.97	Left Levee	28+26.15	189.71	PROTECT

LEGEND:

TREE SURVEY LOCATION

SHEET NOTES:

1. TREE SURVEY LOCATIONS LEFT OF THE CENTERLINE ALIGNMENT WILL HAVE POSITIVE OFFSET AND RIGHT OF THE CENTERLINE ALIGNMENT WILL HAVE A NEGATIVE OFFSET.

2. DIAMETER AT BREAST HEIGHT (DBH) WAS RECORDED IN INCHES BY DBH CLASS SIZE AT 4.5 FEET ABOVE GRADE, FOR EACH TRUNK. WHEN A TREE TRUNK FORKED BELOW THE DBH, THE DIAMETER WAS MEASURED AT THE NARROWEST PART OF THE MAIN STEM BELOW THE FORK AND THE LOCATION OF THE MEASUREMENT WAS RECORDED PER STANDARD ARBORICULTURE PROCEDURE. DBH CLASS SIZES INCLUDE:

1. 2 TO 6 INCHES DBH
2. 7 TO 12 INCHES DBH
3. 13 TO 18 INCHES DBH
4. 19 TO 24 INCHES DBH
5. 25 TO 30 INCHES DBH
6. 31 TO 36 INCHES DBH
7. 37 TO 42 INCHES DBH
8. GREATER THAN 42" DBH

3. MANAGEMENT REQUIREMENTS
   1. REMOVE – AS A RESULT OF CONSTRUCTION ACTIVITIES AND/OR DUE TO EXTREME OR MAJOR PROBLEMS.
   2. SAVE AND PROTECT – NO ACTION.

   THE FOLLOWING MANAGEMENT RECOMMENDATIONS REFER TO TREES RECOMMENDED TO BE SAVED AND PROTECTED.

   3. CLEAN – REMOVE DEAD, DYING, BROKEN, OR DISEASED WOOD GREATER THAN 2 INCHES IN DIAMETER.
   4. RAISE – PRUNE CANOPY TO PROVIDE CLEARANCE FOR CONSTRUCTION ACTIVITIES.
   5. REDUCE – PRUNE CANOPY TO MINIMIZE CONSTRUCTION IMPACT TO TREE.
   6. INSPECT – TREE WITH QUESTIONABLE HEALTH THAT MAY REQUIRE ADDITIONAL EVALUATION.
   7. REMOVE (1) OR SAVE AND INSPECT (6) – RECOMMENDATIONS FOR THESE INVASIVE SPECIES TO BE REVIEWED BASED ON OVERALL CONDITION, LOCATION, POTENTIAL FOR HABITAT VALUE, AND INVASIVE CHARACTER.
   8. RAISE (4) AND/OR REDUCE (5) – EXTENT OF TEMPORARY CONSTRUCTION IMPACTS TO BE DETERMINED.

4. ONLY TREES DESIGNATED FOR REMOVAL ARE TO BE REMOVED. ALL OTHER TREES ARE TO REMAIN AND SHALL BE PROTECTED UNLESS DIRECTED OTHERWISE BY THE ENGINEER.

REV	DESCRIPTION	DATE	APPR.
	DRAFT 100% AUGUST 2014		

ICF INTERNATIONAL

DATE: JULY 2014
DESIGN: L.HOANG
DRAWN: L.HOANG
CHECKED: K.MACKAY

LANDSCAPE ARCHITECT
LANDSCAPE ARCHITECT STAMP
PROJECT ENGINEER DATE

SAN FRANCISQUITO CREEK JOINT POWERS AUTHORITY
ACCEPTED BY DISTRICT
PROJECT ENGINEER DATE

PROJECT NAME AND SHEET DESCRIPTION:
SAN FRANCISQUITO CREEK FLOOD REDUCTION, ECOSYSTEM RESTORATION, & RECREATION PROJECT
TREE DEMOLITION PLAN
R-LINE STATION 23+00 TO 32+00

SCALE: AS SHOWN
VERIFY SCALES: 0 1"
BAR IS ONE INCH ON ORIGINAL DRAWING IF NOT ONE INCH ON THIS SHEET, ADJUST SCALES ACCORDINGLY

PROJECT NUMBER: 26284002
SHEET CODE: L-10
SHEET NUMBER: 103 OF 119

USERNAME: BillShad Tue 08 Jul 2008 09:32am
FILENAME: C:\pwworking\sac\d0171341\L-10_L16
DOCUMENT NUMBER:SFC_LP-C-1028-XXXXXXX

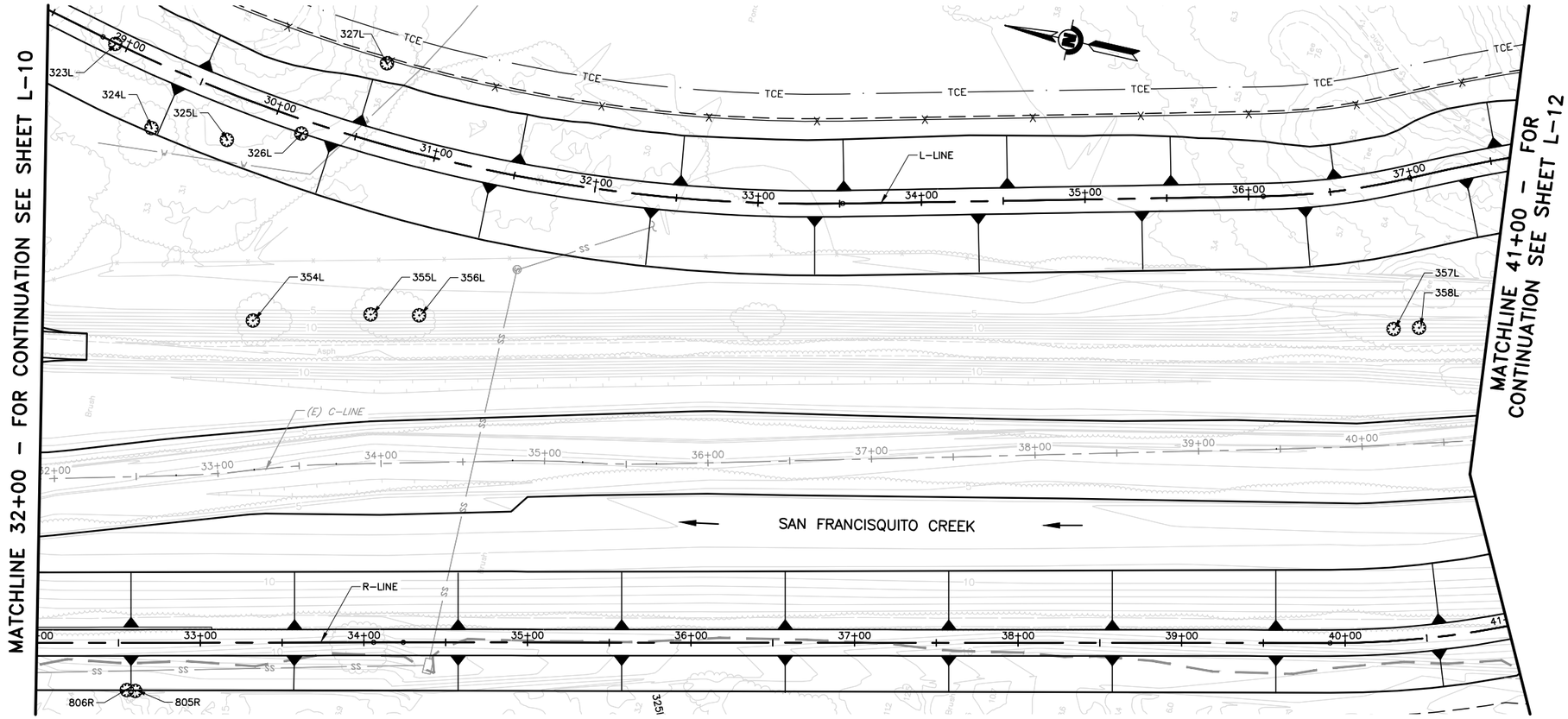

PLAN
SCALE: 1"=40'

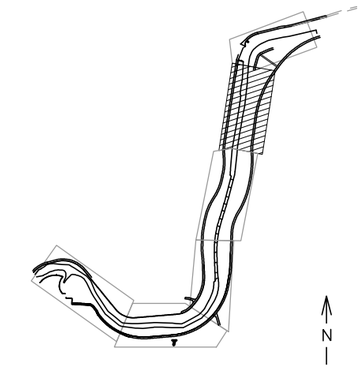

KEY MAP
SCALE: NTS

LEGEND:

TREE SURVEY LOCATION

SHEET NOTES:

1. TREE SURVEY LOCATIONS LEFT OF THE CENTERLINE ALIGNMENT WILL HAVE POSITIVE OFFSET AND RIGHT OF THE CENTERLINE ALIGNMENT WILL HAVE A NEGATIVE OFFSET.

2. DIAMETER AT BREAST HEIGHT (DBH) WAS RECORDED IN INCHES BY DBH CLASS SIZE AT 4.5 FEET ABOVE GRADE, FOR EACH TRUNK. WHEN A TREE TRUNK FORKED BELOW THE DBH, THE DIAMETER WAS MEASURED AT THE NARROWEST PART OF THE MAIN STEM BELOW THE FORK AND THE LOCATION OF THE MEASUREMENT WAS RECORDED PER STANDARD ARBORICULTURE PROCEDURE. DBH CLASS SIZES INCLUDE:

1. 2 TO 6 INCHES DBH
2. 7 TO 12 INCHES DBH
3. 13 TO 18 INCHES DBH
4. 19 TO 24 INCHES DBH
5. 25 TO 30 INCHES DBH
6. 31 TO 36 INCHES DBH
7. 37 TO 42 INCHES DBH
8. GREATER THAN 42" DBH

3. MANAGEMENT REQUIREMENTS
   1. REMOVE – AS A RESULT OF CONSTRUCTION ACTIVITIES AND/OR DUE TO EXTREME OR MAJOR PROBLEMS.
   2. SAVE AND PROTECT – NO ACTION.

   THE FOLLOWING MANAGEMENT RECOMMENDATIONS REFER TO TREES RECOMMENDED TO BE SAVED AND PROTECTED.

   3. CLEAN – REMOVE DEAD, DYING, BROKEN, OR DISEASED WOOD GREATER THAN 2 INCHES IN DIAMETER.
   4. RAISE – PRUNE CANOPY TO PROVIDE CLEARANCE FOR CONSTRUCTION ACTIVITIES.
   5. REDUCE – PRUNE CANOPY TO MINIMIZE CONSTRUCTION IMPACT TO TREE.
   6. INSPECT – TREE WITH QUESTIONABLE HEALTH THAT MAY REQUIRE ADDITIONAL EVALUATION.
   7. REMOVE (1) OR SAVE AND INSPECT (6) – RECOMMENDATIONS FOR THESE INVASIVE SPECIES TO BE REVIEWED BASED ON OVERALL CONDITION, LOCATION, POTENTIAL FOR HABITAT VALUE, AND INVASIVE CHARACTER.
   8. RAISE (4) AND/OR REDUCE (5) – EXTENT OF TEMPORARY CONSTRUCTION IMPACTS TO BE DETERMINED.

4. ONLY TREES DESIGNATED FOR REMOVAL ARE TO BE REMOVED. ALL OTHER TREES ARE TO REMAIN AND SHALL BE PROTECTED UNLESS DIRECTED OTHERWISE BY THE ENGINEER.

TREE SURVEY ID	COMMON NAME	DBH CLASS SIZE	EASTING	NORTHING	ALIGNMENT	STATION	OFFSET (FEET)	TREE MANAGEMENT RECOMMENDATION
323L	Italian Stone Pine	5	6090670.24	1994287.15	Left Levee	28+92.50	0.47	REMOVE
324L	Italian Stone Pine	3	6090624.92	1994254.17	Left Levee	29+33.29	38.05	REMOVE
325L	Acacia	4	6090628.11	1994207.63	Left Levee	29+77.23	27.31	REMOVE
326L	Monterey Cypress	8	6090642.05	1994164.14	Left Levee	30+17.98	8.24	REMOVE
327L	River Sheoak	4	6090695.54	1994122.57	Left Levee	30+55.91	-48.43	INSPECT
354L	Arroyo Willow	5	6090523.93	1994167.51	Left Levee	30+25.43	126.13	REMOVE
355L	Eucalyptus	7	6090543.64	1994098.21	Left Levee	30+86.31	102.22	REMOVE
356L	Italian Stone Pine	2	6090549.62	1994069.15	Left Levee	31+12.60	95.77	REMOVE
357L	Glossy Privet	0	6090673.87	1993486.42	Left Levee	36+73.97	88.51	REMOVE
358L	Glossy Privet	1	6090678.09	1993471.46	Left Levee	36+86.65	90.62	REMOVE
359L	Common Bluegum	7	6090689.88	1993379.63	Left Levee	37+81.30	117.33	REMOVE
805R	Coast Live Oak	2	6090287.10	1994187.35	Right Levee	32+60.22	29.57	INSPECT
806R	Coast Live Oak	2	6090286.52	1994192.55	Right Levee	32+55.03	28.98	INSPECT

USERNAME: BillShad Tue 08 Jul 2008 09:32am
FILENAME: C:\pwworking\sac\d0171341\L-10_L16

DOCUMENT NUMBER: SFC_LP-C-1028-XXXXXX

REV	DESCRIPTION	DATE	APPR.
	DRAFT 100% AUGUST 2014		

ICF INTERNATIONAL

DATE	
JULY 2014	
DESIGN	L.HOANG
DRAWN	L.HOANG
CHECKED	K.MACKAY

LANDSCAPE ARCHITECT
LANDSCAPE ARCHITECT STAMP
PROJECT ENGINEER DATE

SAN FRANCISQUITO CREEK JOINT POWERS AUTHORITY
ACCEPTED BY DISTRICT
PROJECT ENGINEER DATE

PROJECT NAME AND SHEET DESCRIPTION:
SAN FRANCISQUITO CREEK FLOOD REDUCTION, ECOSYSTEM RESTORATION, & RECREATION PROJECT
TREE DEMOLITION PLAN
R-LINE STATION 32+00 TO 41+00

SCALE: AS SHOWN
VERIFY SCALES: 0 – 1"
BAR IS ONE INCH ON ORIGINAL DRAWING IF NOT ONE INCH ON THIS SHEET, ADJUST SCALES ACCORDINGLY

PROJECT NUMBER: 26284002
SHEET CODE: L-11
SHEET NUMBER: 104 OF 119

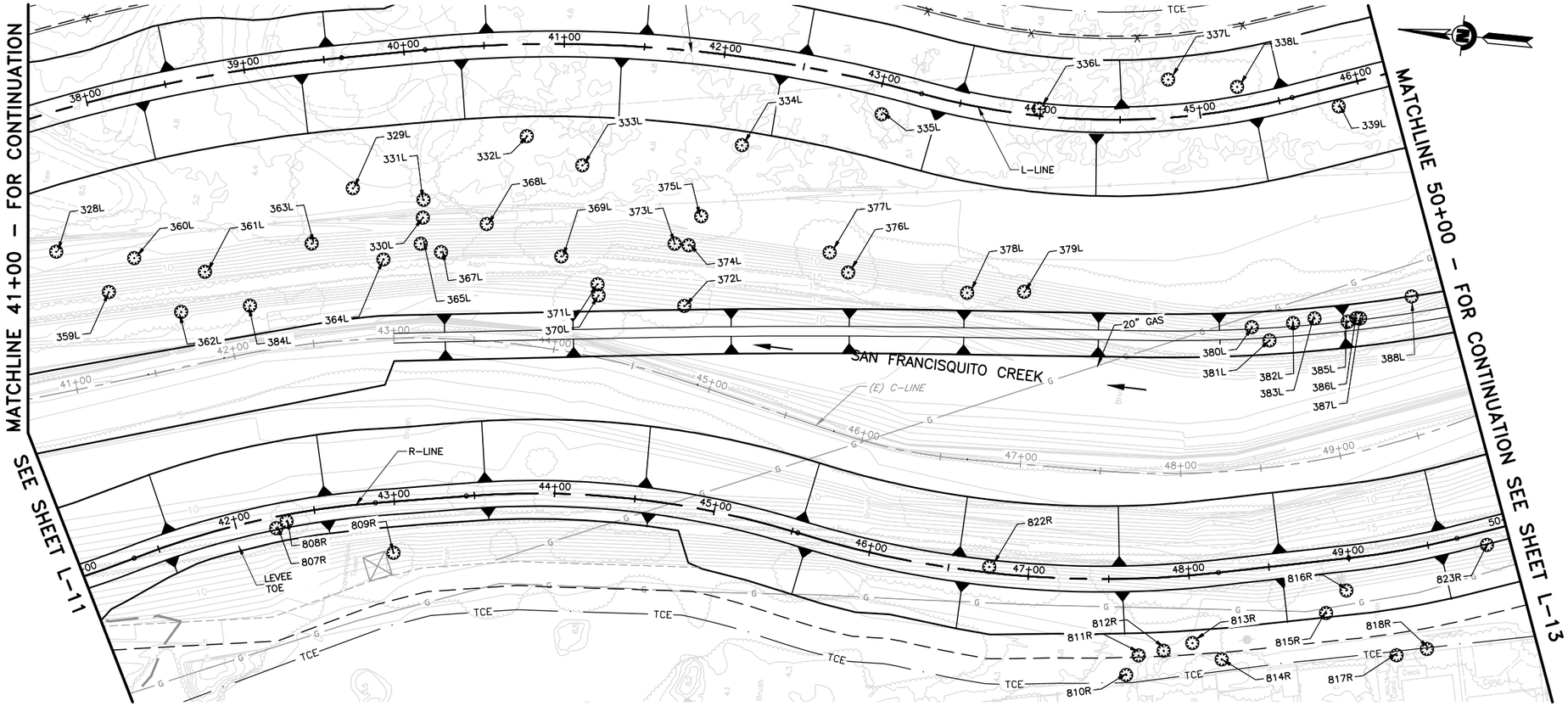

PLAN
SCALE: 1"=40'

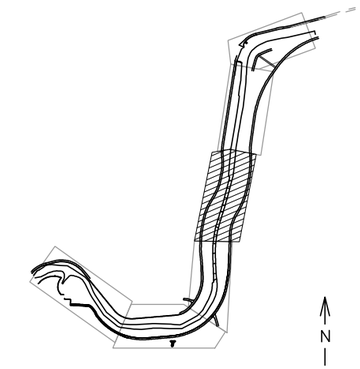

KEY MAP
SCALE: NTS

LEGEND:

⊗ TREE SURVEY LOCATION

SHEET NOTES:

1. TREE SURVEY LOCATIONS LEFT OF THE CENTERLINE ALIGNMENT WILL HAVE POSITIVE OFFSET AND RIGHT OF THE CENTERLINE ALIGNMENT WILL HAVE A NEGATIVE OFFSET.

2. DIAMETER AT BREAST HEIGHT (DBH) WAS RECORDED IN INCHES BY DBH CLASS SIZE AT 4.5 FEET ABOVE GRADE, FOR EACH TRUNK. WHEN A TREE TRUNK FORKED BELOW THE DBH, THE DIAMETER WAS MEASURED AT THE NARROWEST PART OF THE MAIN STEM BELOW THE FORK AND THE LOCATION OF THE MEASUREMENT WAS RECORDED PER STANDARD ARBORICULTURE PROCEDURE. DBH CLASS SIZES INCLUDE:

1. 2 TO 6 INCHES DBH
2. 7 TO 12 INCHES DBH
3. 13 TO 18 INCHES DBH
4. 19 TO 24 INCHES DBH
5. 25 TO 30 INCHES DBH
6. 31 TO 36 INCHES DBH
7. 37 TO 42 INCHES DBH
8. GREATER THAN 42" DBH

3. MANAGEMENT REQUIREMENTS
   1. REMOVE – AS A RESULT OF CONSTRUCTION ACTIVITIES AND/OR DUE TO EXTREME OR MAJOR PROBLEMS.
   2. SAVE AND PROTECT – NO ACTION.

   THE FOLLOWING MANAGEMENT RECOMMENDATIONS REFER TO TREES RECOMMENDED TO BE SAVED AND PROTECTED.

   3. CLEAN – REMOVE DEAD, DYING, BROKEN, OR DISEASED WOOD GREATER THAN 2 INCHES IN DIAMETER.
   4. RAISE – PRUNE CANOPY TO PROVIDE CLEARANCE FOR CONSTRUCTION ACTIVITIES.
   5. REDUCE – PRUNE CANOPY TO MINIMIZE CONSTRUCTION IMPACT TO TREE.
   6. INSPECT – TREE WITH QUESTIONABLE HEALTH THAT MAY REQUIRE ADDITIONAL EVALUATION.
   7. REMOVE (1) OR SAVE AND INSPECT (6) – RECOMMENDATIONS FOR THESE INVASIVE SPECIES TO BE REVIEWED BASED ON OVERALL CONDITION, LOCATION, POTENTIAL FOR HABITAT VALUE, AND INVASIVE CHARACTER.
   8. RAISE (4) AND/OR REDUCE (5) – EXTENT OF TEMPORARY CONSTRUCTION IMPACTS TO BE DETERMINED.

4. ONLY TREES DESIGNATED FOR REMOVAL ARE TO BE REMOVED. ALL OTHER TREES ARE TO REMAIN AND SHALL BE PROTECTED UNLESS DIRECTED OTHERWISE BY THE ENGINEER.

TREE SURVEY ID	COMMON NAME	DBH CLASS SIZE	EASTING	NORTHING	ALIGNMENT	STATION	OFFSET (FEET)	TREE MANAGEMENT RECOMMENDATION
328L	Italian Stone Pine	5	6090711.57	1993414.71	Left Levee	37+54.27	83.98	REMOVE
329L	Italian Stone Pine	8	6090769.17	1993234.98	Left Levee	39+60.57	81.52	REMOVE
330L	Eucalyptus	1	6090755.29	1993189.83	Left Levee	40+02.29	103.77	REMOVE
331L	Eucalyptus	2	6090766.34	1993190.49	Left Levee	40+03.76	92.80	REMOVE
332L	Eucalyptus	6	6090812.11	1993130.45	Left Levee	40+75.60	57.29	REMOVE
333L	Peppertree	4	6090797.48	1993094.26	Left Levee	41+13.08	75.42	REMOVE
334L	Acacia	3	6090819.80	1992996.70	Left Levee	42+19.05	54.53	REMOVE
335L	Myoporum	5	6090847.51	1992912.15	Left Levee	43+04.22	18.76	REMOVE
336L	Eucalyptus	4	6090860.67	1992815.02	Left Levee	43+99.32	-5.40	REMOVE
337L	River Sheoak	4	6090886.67	1992736.89	Left Levee	44+82.93	-23.59	REMOVE
338L	Myoporum	5	6090886.35	1992693.71	Left Levee	45+25.99	-13.38	REMOVE
339L	Common Bluegum	4	6090880.56	1992629.64	Left Levee	45+85.32	12.45	REMOVE
825R	Hind's Black Walnut	5	6090826.76	1991866.54	Right Levee	56+57.15	-45.34	INSPECT
360L	River Sheoak	4	6090712.48	1993366.07	Left Levee	38+04.54	101.00	REMOVE
361L	Eucalyptus	7	6090708.34	1993321.37	Left Levee	38+50.69	119.29	REMOVE
362L	Eucalyptus	3	6090681.95	1993333.65	Left Levee	38+27.82	140.56	REMOVE
363L	Italian Stone Pine	2	6090732.40	1993257.07	Left Levee	39+28.14	112.90	REMOVE
364L	Italian Stone Pine	2	6090726.99	1993211.63	Left Levee	39+75.48	127.39	REMOVE
365L	Italian Stone Pine	2	6090738.93	1993189.44	Left Levee	39+99.55	119.91	REMOVE
367L	Italian Stone Pine	3	6090735.03	1993176.44	Left Levee	40+11.56	126.23	REMOVE
368L	Eucalyptus	1	6090755.20	1993149.91	Left Levee	40+45.53	111.00	REMOVE
369L	Italian Stone Pine	3	6090739.79	1993101.68	Left Levee	40+99.09	132.28	REMOVE
370L	Italian Stone Pine	5	6090717.89	1993076.26	Left Levee	41+27.54	156.07	REMOVE
371L	Italian Stone Pine	2	6090724.81	1993077.51	Left Levee	41+26.53	149.09	REMOVE
372L	Italian Stone Pine	5	6090716.74	1993022.55	Left Levee	41+93.29	158.37	REMOVE
373L	Italian Stone Pine	2	6090754.67	1993032.27	Left Levee	41+81.25	120.54	REMOVE
374L	Italian Stone Pine	2	6090754.52	1993023.62	Left Levee	41+91.31	120.62	REMOVE

TREE SURVEY ID	COMMON NAME	DBH CLASS SIZE	EASTING	NORTHING	ALIGNMENT	STATION	OFFSET (FEET)	TREE MANAGEMENT RECOMMENDATION
375L	Eucalyptus	4	6090773.30	1993017.55	Left Levee	41+97.89	101.74	REMOVE
376L	Italian Stone Pine	5	6090747.56	1992923.07	Left Levee	43+08.58	119.24	REMOVE
377L	Italian Stone Pine	4	6090758.76	1992935.76	Left Levee	42+92.25	109.93	REMOVE
378L	Coast Live Oak	6	6090742.32	1992848.16	Left Levee	43+74.39	114.23	REMOVE
379L	Canary Island Pine	1	6090746.49	1992812.88	Left Levee	44+01.67	108.76	REMOVE
380L	Coast Live Oak	6	6090738.54	1992669.89	Left Levee	45+12.96	135.64	REMOVE
381L	Italian Stone Pine	2	6090731.43	1992658.09	Left Levee	45+20.50	145.47	REMOVE
382L	Peppertree	3	6090743.62	1992644.47	Left Levee	45+33.27	137.39	REMOVE
383L	Italian Stone Pine	2	6090747.84	1992631.54	Left Levee	45+43.95	137.12	REMOVE
385L	Coast Live Oak	2	6090747.75	1992610.78	Left Levee	45+59.30	143.78	REMOVE
386L	Italian Stone Pine	2	6090750.61	1992605.50	Left Levee	45+63.91	142.84	REMOVE
387L	Italian Stone Pine	2	6090750.61	1992603.50	Left Levee	45+65.61	143.53	REMOVE
388L	Canary Island Date Palm	0	6090767.43	1992572.73	Left Levee	46+00.28	138.20	REMOVE
807R	Apple	1	6090554.03	1993261.35	Right Levee	42+24.65	7.10	REMOVE
808R	Plum	1	6090558.89	1993255.41	Right Levee	42+31.81	4.14	REMOVE
809R	Olive	0	6090545.96	1993187.34	Right Levee	42+97.12	31.83	REMOVE
810R	Plum	1	6090515.50	1992726.12	Right Levee	47+59.81	59.86	PROTECT
811R	Yucca	4	6090528.36	1992719.70	Right Levee	47+67.17	47.90	PROTECT
812R	Apple	3	6090532.86	1992704.49	Right Levee	47+81.80	45.60	PROTECT
813R	Apple	2	6090539.34	1992687.17	Right Levee	47+98.81	42.09	PROTECT
814R	Canary Island Date Palm	0	6090531.06	1992667.93	Right Levee	48+14.91	53.89	REMOVE
815R	Hind's Black Walnut	1	6090566.13	1992606.20	Right Levee	48+82.29	32.48	REMOVE
816R	Canary Island Date Palm	0	6090581.42	1992595.03	Right Levee	48+96.41	19.86	REMOVE
817R	Hind's Black Walnut	4	6090544.35	1992559.90	Right Levee	49+20.45	63.91	PROTECT
818R	Hind's Black Walnut	3	6090550.12	1992541.52	Right Levee	49+37.53	63.21	PROTECT
822R	Tree Tobacco	1	6090573.94	1992817.60	Right Levee	46+75.23	-3.55	REMOVE
823R	Plum	2	6090618.25	1992510.83	Right Levee	49+85.67	8.50	REMOVE

REV	DESCRIPTION	DATE	APPR.
	DRAFT 100% AUGUST 2014		

ICF INTERNATIONAL

DATE: JULY 2014
DESIGN: L.HOANG
DRAWN: L.HOANG
CHECKED: K.MACKAY

LANDSCAPE ARCHITECT
LANDSCAPE ARCHITECT STAMP
PROJECT ENGINEER DATE

SAN FRANCISQUITO CREEK JOINT POWERS AUTHORITY
ACCEPTED BY DISTRICT
PROJECT ENGINEER DATE

PROJECT NAME AND SHEET DESCRIPTION:
SAN FRANCISQUITO CREEK FLOOD REDUCTION, ECOSYSTEM RESTORATION, & RECREATION PROJECT
TREE DEMOLITION PLAN
R-LINE STATION 41+00 TO 50+00

SCALE: AS SHOWN
VERIFY SCALES: 0 1"
BAR IS ONE INCH ON ORIGINAL DRAWING IF NOT ONE INCH ON THIS SHEET, ADJUST SCALES ACCORDINGLY

PROJECT NUMBER: 26284002
SHEET CODE: L-12
SHEET NUMBER: 105 OF 119

DOCUMENT NUMBER: SFC_LP-C-1028-XXXXXX

USERNAME: BillShad Tue 08 Jul 2008 09:32am
FILENAME: C:\pwworking\sac\d0171341\L-10_L16

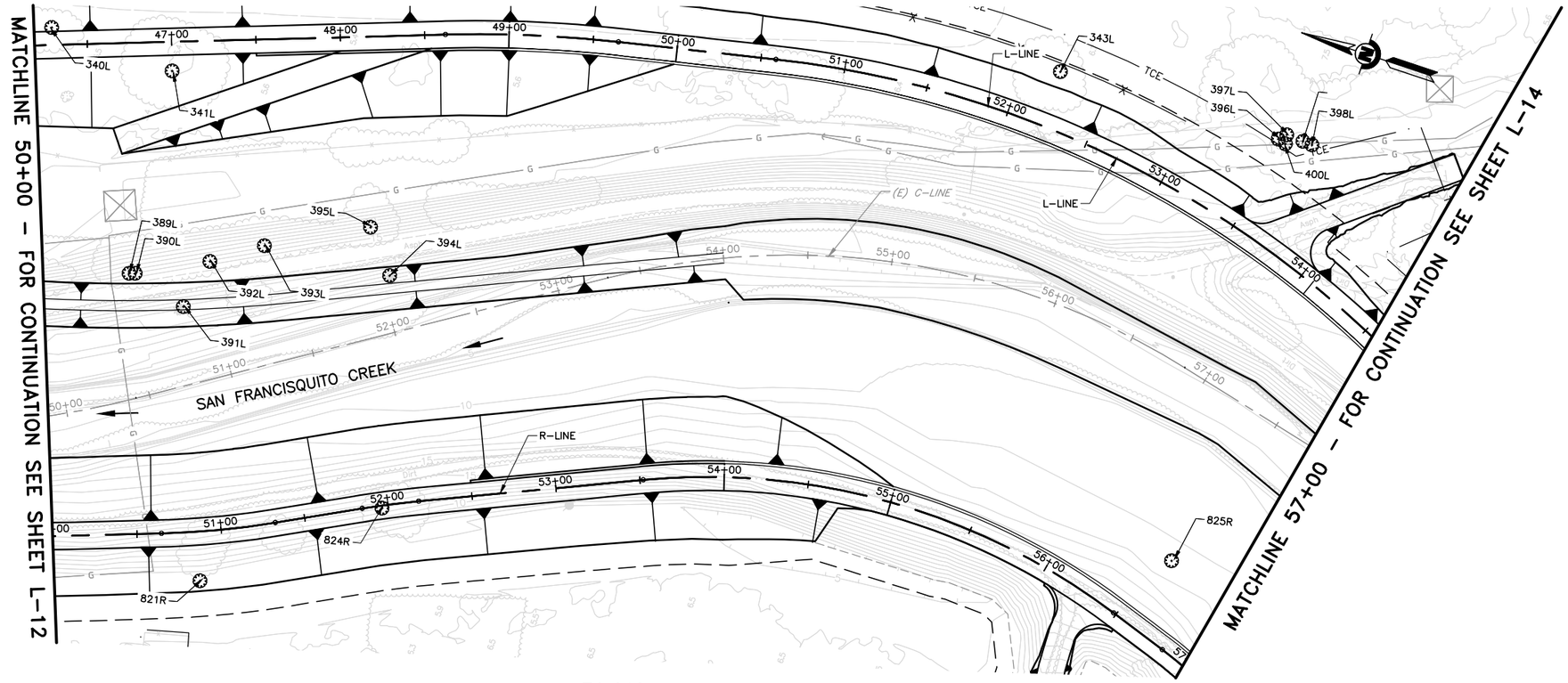

PLAN
SCALE: 1"=40'

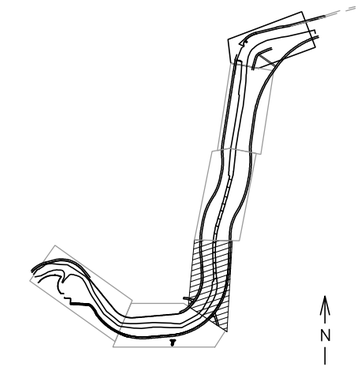

KEY MAP
SCALE: NTS

TREE SURVEY ID	COMMON NAME	DBH CLASS SIZE	EASTING	NORTHING	ALIGNMENT	STATION	OFFSET (FEET)	TREE MANAGEMENT RECOMMENDATION
340L	River Sheoak	4	6090916.96	1992595.89	Left Levee	46+29.46	-10.28	REMOVE
341L	River Sheoak	5	6090915.17	1992520.06	Left Levee	47+00.13	17.25	REMOVE
343L	Italian Stone Pine	5	6091080.96	1992020.50	Left Levee	52+20.72	-33.71	INSPECT
389L	Italian Stone Pine	2	6090793.27	1992506.39	Left Levee	46+71.45	136.51	REMOVE
390L	Italian Stone Pine	4	6090794.45	1992502.89	Left Levee	46+75.14	136.59	REMOVE
391L	Canary Island Date Palm	8	6090784.69	1992469.66	Left Levee	47+03.06	157.09	REMOVE
392L	Italian Stone Pine	2	6090815.12	1992463.13	Left Levee	47+19.57	130.71	REMOVE
393L	Italian Stone Pine	2	6090834.17	1992435.44	Left Levee	47+52.09	122.23	REMOVE
394L	Canary Island Date Palm	8	6090840.76	1992359.50	Left Levee	48+25.73	141.91	REMOVE
395L	Italian Stone Pine	3	6090864.33	1992379.28	Left Levee	48+15.17	113.02	REMOVE
396L	Unknown	1	6091083.89	1991885.42	Left Levee	53+44.67	-57.62	PROTECT
397L	Peppertree	1	6091087.87	1991881.45	Left Levee	53+47.24	-62.49	REMOVE
398L	Glossy Privet	1	6091086.89	1991865.37	Left Levee	53+61.48	-65.88	REMOVE
399L	Peppertree	6	6091087.14	1991871.15	Left Levee	53+56.41	-64.52	REMOVE
400L	Italian Stone Pine	3	6091082.50	1991880.55	Left Levee	53+49.29	-57.53	REMOVE
821R	Canary Island Date Palm	0	6090633.63	1992408.92	Right Levee	50+85.51	29.91	REMOVE
824R	Peppertree	7	6090708.60	1992320.23	Right Levee	51+96.24	1.52	REMOVE
825R	Hind's Black Walnut	5	6090826.76	1991866.54	Right Levee	56+57.16	-45.34	REMOVE

LEGEND:

TREE SURVEY LOCATION

SHEET NOTES:

1. TREE SURVEY LOCATIONS LEFT OF THE CENTERLINE ALIGNMENT WILL HAVE POSITIVE OFFSET AND RIGHT OF THE CENTERLINE ALIGNMENT WILL HAVE A NEGATIVE OFFSET.

2. DIAMETER AT BREAST HEIGHT (DBH) WAS RECORDED IN INCHES BY DBH CLASS SIZE AT 4.5 FEET ABOVE GRADE, FOR EACH TRUNK. WHEN A TREE TRUNK FORKED BELOW THE DBH, THE DIAMETER WAS MEASURED AT THE NARROWEST PART OF THE MAIN STEM BELOW THE FORK AND THE LOCATION OF THE MEASUREMENT WAS RECORDED PER STANDARD ARBORICULTURE PROCEDURE. DBH CLASS SIZES INCLUDE:

1. 2 TO 6 INCHES DBH
2. 7 TO 12 INCHES DBH
3. 13 TO 18 INCHES DBH
4. 19 TO 24 INCHES DBH
5. 25 TO 30 INCHES DBH
6. 31 TO 36 INCHES DBH
7. 37 TO 42 INCHES DBH
8. GREATER THAN 42" DBH

3. MANAGEMENT REQUIREMENTS
   1. REMOVE – AS A RESULT OF CONSTRUCTION ACTIVITIES AND/OR DUE TO EXTREME OR MAJOR PROBLEMS.
   2. SAVE AND PROTECT – NO ACTION.

   THE FOLLOWING MANAGEMENT RECOMMENDATIONS REFER TO TREES RECOMMENDED TO BE SAVED AND PROTECTED.

   3. CLEAN – REMOVE DEAD, DYING, BROKEN, OR DISEASED WOOD GREATER THAN 2 INCHES IN DIAMETER.
   4. RAISE – PRUNE CANOPY TO PROVIDE CLEARANCE FOR CONSTRUCTION ACTIVITIES.
   5. REDUCE – PRUNE CANOPY TO MINIMIZE CONSTRUCTION IMPACT TO TREE.
   6. INSPECT – TREE WITH QUESTIONABLE HEALTH THAT MAY REQUIRE ADDITIONAL EVALUATION.
   7. REMOVE (1) OR SAVE AND INSPECT (6) – RECOMMENDATIONS FOR THESE INVASIVE SPECIES TO BE REVIEWED BASED ON OVERALL CONDITION, LOCATION, POTENTIAL FOR HABITAT VALUE, AND INVASIVE CHARACTER.
   8. RAISE (4) AND/OR REDUCE (5) – EXTENT OF TEMPORARY CONSTRUCTION IMPACTS TO BE DETERMINED.

4. ONLY TREES DESIGNATED FOR REMOVAL ARE TO BE REMOVED. ALL OTHER TREES ARE TO REMAIN AND SHALL BE PROTECTED UNLESS DIRECTED OTHERWISE BY THE ENGINEER.

USERNAME: BillShad Tue 08 Jul 2008 09:32am
FILENAME: C:\pwworking\sac\d0171341\L-10_L16

DOCUMENT NUMBER: SFC_LP-C-1028-XXXXXX

REV	DESCRIPTION	DATE	APPR.
	DRAFT 100% AUGUST 2014		

ICF INTERNATIONAL

DATE: JULY 2014
DESIGN: L.HOANG
DRAWN: L.HOANG
CHECKED: K.MACKAY

LANDSCAPE ARCHITECT
LANDSCAPE ARCHITECT STAMP
PROJECT ENGINEER DATE

SAN FRANCISQUITO CREEK JOINT POWERS AUTHORITY
ACCEPTED BY DISTRICT
PROJECT ENGINEER DATE

PROJECT NAME AND SHEET DESCRIPTION:
SAN FRANCISQUITO CREEK FLOOD REDUCTION, ECOSYSTEM RESTORATION, & RECREATION PROJECT
TREE DEMOLITION PLAN
R-LINE STATION 50+00 TO 57+00

SCALE: AS SHOWN
VERIFY SCALES: 0 1" BAR IS ONE INCH ON ORIGINAL DRAWING IF NOT ONE INCH ON THIS SHEET, ADJUST SCALES ACCORDINGLY

PROJECT NUMBER: 26284002
SHEET CODE: L-13
SHEET NUMBER: 106 OF 119

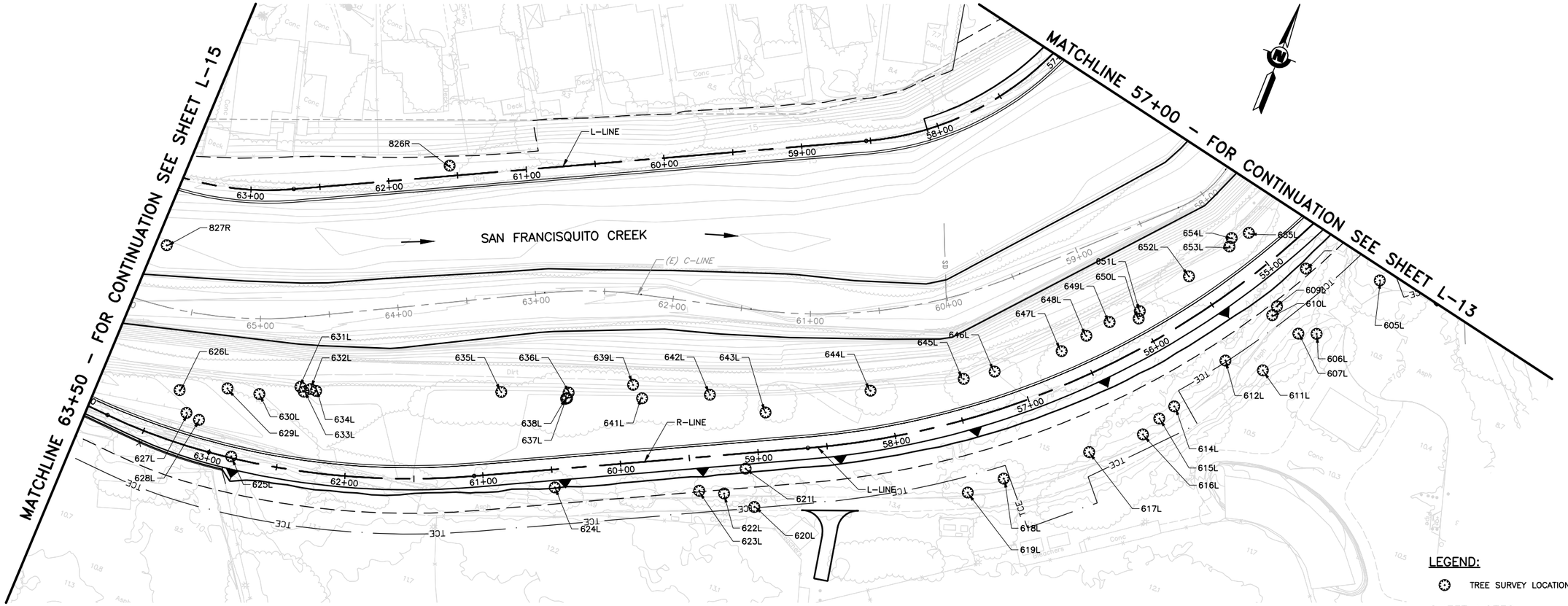

PLAN

SCALE: 1"=40'

TREE SURVEY ID	COMMON NAME	DBH CLASS SIZE	EASTING	NORTHING	ALIGNMENT	STATION	OFFSET (FEET)	TREE MANAGEMENT RECOMMENDATION
605L	Eucalyptus	6	6091049.95	1991774.79	Left Levee	54+50.01	-62.91	REMOVE
606L	Eucalyptus	6	6091021.75	1991721.95	Left Levee	55+04.35	-61.96	REMOVE
607L	Eucalyptus	8	6091009.43	1991717.26	Left Levee	55+13.71	-53.66	REMOVE
608L	Eucalyptus	5	6090997.10	1991762.99	Left Levee	54+81.70	-20.63	REMOVE
609L	Eucalyptus	4	6090987.73	1991729.88	Left Levee	55+13.88	-28.55	REMOVE
610L	Eucalyptus	4	6090986.94	1991722.67	Left Levee	55+20.16	-31.58	REMOVE
611L	Eucalyptus	5	6090995.36	1991683.04	Left Levee	55+47.06	-59.97	REMOVE
612L	Eucalyptus	8	6090967.59	1991679.63	Left Levee	55+64.23	-39.02	REMOVE
614L	Eucalyptus	8	6090945.41	1991635.14	Left Levee	56+09.77	-48.50	REMOVE
615L	Eucalyptus	7	6090938.62	1991622.87	Left Levee	56+22.49	-51.24	REMOVE
616L	Eucalyptus	5	6090931.86	1991607.81	Left Levee	56+36.97	-56.15	REMOVE
617L	Eucalyptus	5	6090900.47	1991581.61	Left Levee	56+74.32	-51.72	REMOVE
618L	Eucalyptus	6	6090850.04	1991540.84	Left Levee	57+34.19	-48.83	REMOVE
619L	Eucalyptus	8	6090829.64	1991521.89	Left Levee	57+59.81	-51.45	REMOVE
620L	Eucalyptus	8	6090689.88	1991455.05	Left Levee	59+06.47	-39.28	REMOVE
621L	Eucalyptus	5	6090673.79	1991478.57	Left Levee	59+10.38	-11.06	REMOVE
622L	Eucalyptus	6	6090665.95	1991456.07	Left Levee	59+27.43	-27.70	REMOVE
623L	Eucalyptus	4	6090648.45	1991451.20	Left Levee	59+45.27	-24.25	REMOVE
624L	Eucalyptus	7	6090550.42	1991414.78	Left Levee	60+49.25	-13.13	REMOVE
625L	Eucalyptus	4	6090324.42	1991349.05	Left Levee	62+84.11	1.06	REMOVE
626L	Eucalyptus	4	6090271.97	1991379.85	Left Levee	63+34.96	36.99	REMOVE
627L	Eucalyptus	1	6090282.69	1991366.38	Left Levee	63+24.58	22.87	REMOVE
628L	Eucalyptus	1	6090293.01	1991365.09	Left Levee	63+13.99	20.72	REMOVE
629L	Glossy Privet	2	6090303.75	1991393.82	Left Levee	62+99.39	48.17	REMOVE
630L	Hind's Black Walnut	1	6090326.75	1991398.63	Left Levee	62+73.69	49.69	REMOVE
631L	Glossy Privet	1	6090352.44	1991414.38	Left Levee	62+42.39	60.24	REMOVE

TREE SURVEY ID	COMMON NAME	DBH CLASS SIZE	EASTING	NORTHING	ALIGNMENT	STATION	OFFSET (FEET)	TREE MANAGEMENT RECOMMENDATION
632L	Glossy Privet	1	6090359.99	1991415.70	Left Levee	62+33.81	59.82	REMOVE
633L	Glossy Privet	1	6090355.97	1991412.08	Left Levee	62+39.11	57.23	REMOVE
634L	Oak	1	6090364.09	1991415.91	Left Levee	62+29.31	59.06	REMOVE
635L	Silver Wattle Mimosa	2	6090488.91	1991464.69	Left Levee	60+82.03	58.99	REMOVE
636L	Eucalyptus	5	6090534.33	1991482.26	Left Levee	60+33.55	54.46	REMOVE
637L	Glossy Privet	1	6090534.82	1991478.15	Left Levee	60+34.94	50.55	REMOVE
638L	Glossy Privet	1	6090534.30	1991477.57	Left Levee	60+35.66	50.27	REMOVE
639L	Eucalyptus	8	6090575.58	1991504.77	Left Levee	59+86.59	56.20	REMOVE
641L	Glossy Privet	1	6090585.29	1991498.10	Left Levee	59+80.88	45.90	REMOVE
642L	Eucalyptus	5	6090629.92	1991518.64	Left Levee	59+31.76	44.37	REMOVE
643L	Eucalyptus	5	6090672.13	1991521.58	Left Levee	58+92.68	28.18	REMOVE
644L	Eucalyptus	8	6090736.97	1991564.35	Left Levee	58+12.51	35.48	REMOVE
645L	Eucalyptus	4	6090796.51	1991597.24	Left Levee	57+41.05	28.62	REMOVE
646L	Eucalyptus	8	6090815.28	1991610.41	Left Levee	57+17.08	26.97	REMOVE
647L	Eucalyptus	5	6090854.89	1991642.09	Left Levee	56+64.29	23.32	REMOVE
648L	Eucalyptus	4	6090867.38	1991659.07	Left Levee	56+42.51	26.02	REMOVE
649L	Eucalyptus	5	6090879.39	1991674.48	Left Levee	56+22.12	27.32	REMOVE
650L	Glossy Privet	1	6090897.98	1991684.61	Left Levee	56+01.65	19.53	REMOVE
651L	Glossy Privet	1	6090896.83	1991689.93	Left Levee	55+98.09	23.75	REMOVE
652L	Eucalyptus	8	6090920.50	1991726.47	Left Levee	55+52.76	26.38	REMOVE
653L	Glossy Privet	1	6090939.77	1991757.42	Left Levee	55+14.64	26.75	REMOVE
654L	Glossy Privet	2	6090939.07	1991763.68	Left Levee	55+09.35	30.52	REMOVE
655L	Glossy Privet	1	6090949.16	1991771.80	Left Levee	54+96.73	25.76	REMOVE
826R	Elm	1	6090393.54	1991603.11	Right Levee	61+55.12	7.43	REMOVE
827R	Ash	2	6090224.59	1991473.95	Right Levee	63+47.97	-50.18	INSPECT

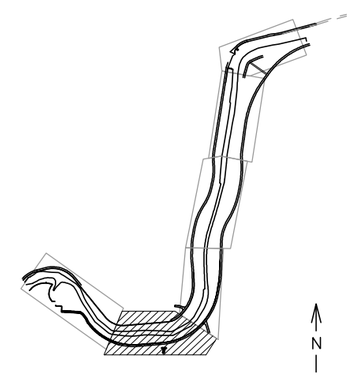

KEY MAP

SCALE: NTS

LEGEND:

TREE SURVEY LOCATION

SHEET NOTES:

1. TREE SURVEY LOCATIONS LEFT OF THE CENTERLINE ALIGNMENT WILL HAVE POSITIVE OFFSET AND RIGHT OF THE CENTERLINE ALIGNMENT WILL HAVE A NEGATIVE OFFSET.

2. DIAMETER AT BREAST HEIGHT (DBH) WAS RECORDED IN INCHES BY DBH CLASS SIZE AT 4.5 FEET ABOVE GRADE, FOR EACH TRUNK. WHEN A TREE TRUNK FORKED BELOW THE DBH, THE DIAMETER WAS MEASURED AT THE NARROWEST PART OF THE MAIN STEM BELOW THE FORK AND THE LOCATION OF THE MEASUREMENT WAS RECORDED PER STANDARD ARBORICULTURE PROCEDURE. DBH CLASS SIZES INCLUDE:

1. 2 TO 6 INCHES DBH
2. 7 TO 12 INCHES DBH
3. 13 TO 18 INCHES DBH
4. 19 TO 24 INCHES DBH
5. 25 TO 30 INCHES DBH
6. 31 TO 36 INCHES DBH
7. 37 TO 42 INCHES DBH
8. GREATER THAN 42" DBH

3. MANAGEMENT REQUIREMENTS
   1. REMOVE – AS A RESULT OF CONSTRUCTION ACTIVITIES AND/OR DUE TO EXTREME OR MAJOR PROBLEMS.
   2. SAVE AND PROTECT – NO ACTION.

   THE FOLLOWING MANAGEMENT RECOMMENDATIONS REFER TO TREES RECOMMENDED TO BE SAVED AND PROTECTED.

   3. CLEAN – REMOVE DEAD, DYING, BROKEN, OR DISEASED WOOD GREATER THAN 2 INCHES IN DIAMETER.
   4. RAISE – PRUNE CANOPY TO PROVIDE CLEARANCE FOR CONSTRUCTION ACTIVITIES.
   5. REDUCE – PRUNE CANOPY TO MINIMIZE CONSTRUCTION IMPACT TO TREE.
   6. INSPECT – TREE WITH QUESTIONABLE HEALTH THAT MAY REQUIRE ADDITIONAL EVALUATION.
   7. REMOVE (1) OR SAVE AND INSPECT (6) – RECOMMENDATIONS FOR THESE INVASIVE SPECIES TO BE REVIEWED BASED ON OVERALL CONDITION, LOCATION, POTENTIAL FOR HABITAT VALUE, AND INVASIVE CHARACTER.
   8. RAISE (4) AND/OR REDUCE (5) – EXTENT OF TEMPORARY CONSTRUCTION IMPACTS TO BE DETERMINED.

4. ONLY TREES DESIGNATED FOR REMOVAL ARE TO BE REMOVED. ALL OTHER TREES ARE TO REMAIN AND SHALL BE PROTECTED UNLESS DIRECTED OTHERWISE BY THE ENGINEER.

REV	DESCRIPTION	DATE	APPR.
	DRAFT 100% AUGUST 2014		

ICF INTERNATIONAL

DATE: JULY 2014
DESIGN: L.HOANG
DRAWN: L.HOANG
CHECKED: K.MACKAY

LANDSCAPE ARCHITECT
LANDSCAPE ARCHITECT STAMP
PROJECT ENGINEER DATE

SAN FRANCISQUITO CREEK JOINT POWERS AUTHORITY
ACCEPTED BY DISTRICT
PROJECT ENGINEER DATE

PROJECT NAME AND SHEET DESCRIPTION:

SAN FRANCISQUITO CREEK FLOOD REDUCTION, ECOSYSTEM RESTORATION, & RECREATION PROJECT

TREE DEMOLITION PLAN
R-LINE STATION 57+00 TO 63+50

SCALE: AS SHOWN
VERIFY SCALES: 0 — 1"
BAR IS ONE INCH ON ORIGINAL DRAWING IF NOT ONE INCH ON THIS SHEET, ADJUST SCALES ACCORDINGLY

PROJECT NUMBER: 26284002
SHEET CODE: L-14
SHEET NUMBER: 107 OF 119

DOCUMENT NUMBER: SFC_LP-C-1028-XXXXXX

USERNAME: BillShad Tue 08 Jul 2008 09:32am
FILENAME: C:\pwworking\sac\d0171341\L-10_L16

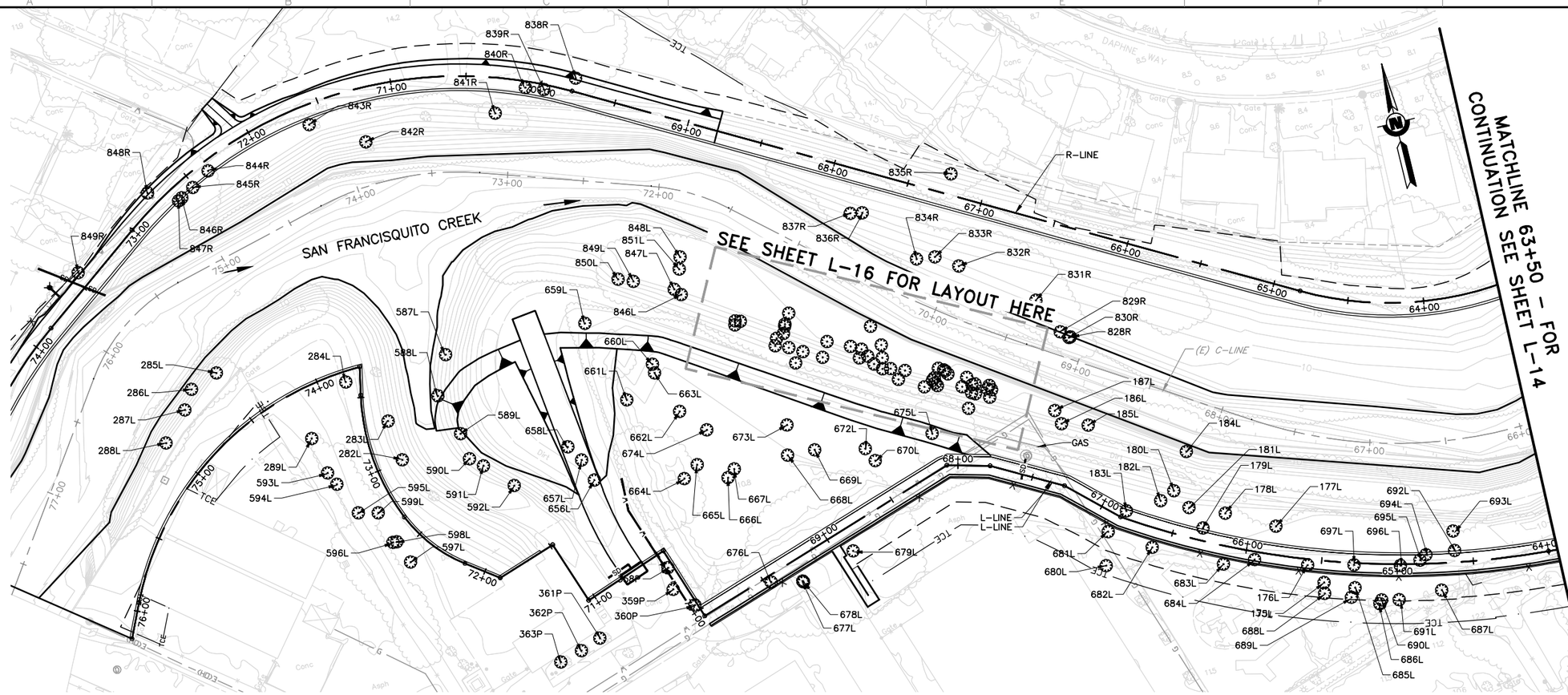

PLAN

SCALE: 1"=40'

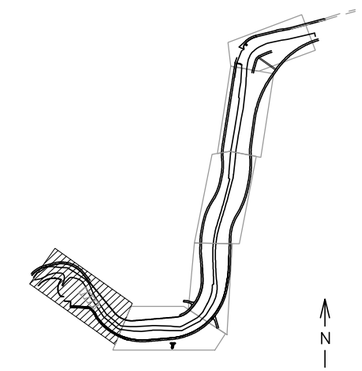

KEY MAP

SCALE: NTS

LEGEND:

TREE SURVEY LOCATION

SHEET NOTES:

1. TREE SURVEY LOCATIONS LEFT OF THE CENTERLINE ALIGNMENT WILL HAVE POSITIVE OFFSET AND RIGHT OF THE CENTERLINE ALIGNMENT WILL HAVE A NEGATIVE OFFSET.

2. DIAMETER AT BREAST HEIGHT (DBH) WAS RECORDED IN INCHES BY DBH CLASS SIZE AT 4.5 FEET ABOVE GRADE, FOR EACH TRUNK. WHEN A TREE TRUNK FORKED BELOW THE DBH, THE DIAMETER WAS MEASURED AT THE NARROWEST PART OF THE MAIN STEM BELOW THE FORK AND THE LOCATION OF THE MEASUREMENT WAS RECORDED PER STANDARD ARBORICULTURE PROCEDURE. DBH CLASS SIZES INCLUDE:

1. 2 TO 6 INCHES DBH	5. 25 TO 30 INCHES DBH
2. 7 TO 12 INCHES DBH	6. 31 TO 36 INCHES DBH
3. 13 TO 18 INCHES DBH	7. 37 TO 42 INCHES DBH
4. 19 TO 24 INCHES DBH	8. GREATER THAN 42" DBH

3. MANAGEMENT REQUIREMENTS
   1. REMOVE – AS A RESULT OF CONSTRUCTION ACTIVITIES AND/OR DUE TO EXTREME OR MAJOR PROBLEMS.
   2. SAVE AND PROTECT – NO ACTION.

   THE FOLLOWING MANAGEMENT RECOMMENDATIONS REFER TO TREES RECOMMENDED TO BE SAVED AND PROTECTED.

   3. CLEAN – REMOVE DEAD, DYING, BROKEN, OR DISEASED WOOD GREATER THAN 2 INCHES IN DIAMETER.
   4. RAISE – PRUNE CANOPY TO PROVIDE CLEARANCE FOR CONSTRUCTION ACTIVITIES.
   5. REDUCE – PRUNE CANOPY TO MINIMIZE CONSTRUCTION IMPACT TO TREE.
   6. INSPECT – TREE WITH QUESTIONABLE HEALTH THAT MAY REQUIRE ADDITIONAL EVALUATION.
   7. REMOVE (1) OR SAVE AND INSPECT (6) – RECOMMENDATIONS FOR THESE INVASIVE SPECIES TO BE REVIEWED BASED ON OVERALL CONDITION, LOCATION, POTENTIAL FOR HABITAT VALUE, AND INVASIVE CHARACTER.
   8. RAISE (4) AND/OR REDUCE (5) – EXTENT OF TEMPORARY CONSTRUCTION IMPACTS TO BE DETERMINED.

4. ONLY TREES DESIGNATED FOR REMOVAL ARE TO BE REMOVED. ALL OTHER TREES ARE TO REMAIN AND SHALL BE PROTECTED UNLESS DIRECTED OTHERWISE BY THE ENGINEER.

TREE SURVEY ID	COMMON NAME	DBH CLASS SIZE	EASTING	NORTHING	ALIGNMENT	STATION	OFFSET (FEET)	TREE MANAGEMENT RECOMMENDATION
175L	Box Elder	2	6090060.10	1991360.02	Left Levee	65+48.19	-12.17	REMOVE
176L	Blue Elderberry	0	6090052.26	1991373.66	Left Levee	65+59.96	-1.88	REMOVE
177L	Box Elder	3	6090038.04	1991403.48	Left Levee	65+84.38	20.81	REMOVE
178L	Blue Elderberry	3	6090007.65	1991419.62	Left Levee	66+20.12	23.08	REMOVE
179L	Valley Oak	1	6089991.14	1991413.69	Left Levee	66+32.59	10.36	REMOVE
180L	Blue Elderberry	2	6089978.22	1991442.04	Left Levee	66+57.92	29.14	REMOVE
181L	Box Elder	1	6089985.32	1991428.89	Left Levee	66+45.20	21.07	REMOVE
182L	Coast Live Oak	1	6089968.21	1991437.74	Left Levee	66+64.59	20.53	REMOVE
183L	Valley Oak	1	6089944.75	1991436.62	Left Levee	66+86.39	7.28	REMOVE
184L	Hind's Black Walnut	5	6089992.32	1991465.23	Left Levee	66+56.82	56.26	REMOVE
185L	Blue Elderberry	0	6089933.44	1991497.27	Left Levee	67+28.03	45.34	REMOVE
186L	Arroyo Willow	2	6089916.81	1991502.43	Left Levee	67+41.74	40.97	REMOVE
187L	Blue Elderberry	0	6089914.55	1991511.87	Left Levee	67+48.20	48.21	REMOVE
282L	Western White Alder	3	6089489.35	1991581.95	Left Levee	73+67.07	53.41	PROTECT
283L	Balsam Poplar	1	6089486.27	1991609.02	Left Levee	73+93.69	59.23	PROTECT
284L	Western White Alder	2	6089465.27	1991640.60	Left Levee	74+30.36	49.54	INSPECT
285L	Lombardy Poplar	5	6089383.87	1991666.50	Left Levee	74+52.79	45.19	REMOVE
286L	Lombardy Poplar	6	6089365.44	1991659.85	Left Levee	74+69.20	46.77	REMOVE
287L	Tree-of-Heaven	7	6089357.99	1991647.74	Left Levee	74+79.56	39.50	REMOVE
288L	Tree-of-Heaven	6	6089340.80	1991629.49	Left Levee	75+00.59	32.85	REMOVE
289L	Paperbark	1	6089434.69	1991609.72	Left Levee	74+11.00	10.63	INSPECT
587L	Balsam Poplar	1	6089533.44	1991642.53	Left Levee	74+10.18	114.68	REMOVE
588L	Western White Alder	1	6089522.10	1991617.33	Left Levee	73+89.99	95.82	REMOVE
589L	Western White Alder	1	6089530.70	1991589.62	Left Levee	71+72.09	94.25	PROTECT
590L	Western White Alder	2	6089532.57	1991572.18	Left Levee	71+75.90	77.12	INSPECT
591L	Balsam Poplar	1	6089540.36	1991565.52	Left Levee	71+70.64	68.32	PROTECT
592L	Balsam Poplar	1	6089556.94	1991548.10	Left Levee	71+57.36	46.43	PROTECT
593L	Paperbark	1	6089439.52	1991585.24	Left Levee	73+86.27	7.30	INSPECT
594L	Paperbark	1	6089443.67	1991576.53	Left Levee	73+76.68	8.42	INSPECT
595L	River Sheoak	1	6089452.93	1991554.90	Left Levee	73+53.23	10.21	INSPECT

TREE SURVEY ID	COMMON NAME	DBH CLASS SIZE	EASTING	NORTHING	ALIGNMENT	STATION	OFFSET (FEET)	TREE MANAGEMENT RECOMMENDATION
596L	River Sheoak	1	6089470.59	1991530.61	Left Levee	73+24.54	19.08	PROTECT
597L	River Sheoak	1	6089478.75	1991515.29	Left Levee	73+07.40	21.87	PROTECT
598L	River Sheoak	1	6089473.03	1991530.37	Left Levee	73+23.52	21.31	PROTECT
599L	River Sheoak	1	6089465.70	1991551.80	Left Levee	73+46.17	21.29	PROTECT
656L	River Sheoak	1	6089609.09	1991539.13	Left Levee	71+13.84	19.15	PROTECT
657L	River Sheoak	1	6089604.10	1991553.95	Left Levee	71+13.79	34.79	PROTECT
658L	River Sheoak	3	6089597.26	1991564.51	Left Levee	71+16.84	46.99	PROTECT
659L	Hind's Black Walnut	5	6089627.40	1991640.83	Left Levee	73+78.25	203.07	REMOVE
660L	Fremont's Cottonwood	2	6089664.29	1991604.24	Left Levee	69+32.05	171.50	PROTECT
661L	Fremont's Cottonwood	3	6089642.31	1991585.42	Left Levee	69+58.92	160.78	PROTECT
662L	Fremont's Cottonwood	1	6089674.32	1991569.77	Left Levee	69+33.68	135.64	PROTECT
663L	Valley Oak	1	6089664.31	1991598.33	Left Levee	69+33.94	165.91	PROTECT
664L	Box Elder	1	6089666.90	1991526.08	Left Levee	70+88.72	37.23	PROTECT
665L	Box Elder	2	6089677.28	1991532.96	Left Levee	70+91.88	49.28	PROTECT
666L	Box Elder	1	6089695.02	1991519.84	Left Levee	70+73.73	61.84	PROTECT
667L	Box Elder	1	6089700.32	1991524.44	Left Levee	70+76.38	68.34	PROTECT
668L	Sycamore	1	6089736.63	1991524.96	Left Levee	68+89.16	73.12	PROTECT
669L	Box Elder	1	6089754.77	1991524.20	Left Levee	68+72.24	66.54	PROTECT
670L	Box Elder	2	6089791.88	1991507.82	Left Levee	68+42.40	39.07	PROTECT
672L	Box Elder	2	6089787.32	1991517.08	Left Levee	68+43.73	49.31	INSPECT
673L	Box Elder	1	6089740.95	1991544.40	Left Levee	68+78.80	90.12	PROTECT
674L	Box Elder	1	6089688.89	1991553.75	Left Levee	69+25.05	115.77	INSPECT
675L	Coast Live Oak	5	6089832.52	1991516.33	Left Levee	68+01.19	34.01	REMOVE
676L	Common Bluegum	7	6089706.40	1991446.39	Left Levee	69+43.12	8.51	REMOVE
677L	Common Bluegum	3	6089726.71	1991442.07	Left Levee	69+25.30	-2.14	REMOVE
678L	Common Bluegum	5	6089727.09	1991441.41	Left Levee	69+25.15	-2.88	REMOVE
679L	Common Bluegum	8	6089763.65	1991453.56	Left Levee	68+86.63	-3.18	REMOVE
680L	Fremont's Cottonwood	3	6089923.27	1991404.69	Left Levee	66+84.90	-31.02	INSPECT
681L	Fremont's Cottonwood	1	6089929.85	1991426.15	Left Levee	66+90.36	-10.50	INSPECT
682L	Fremont's Cottonwood	1	6089955.62	1991409.23	Left Levee	66+61.81	-10.51	INSPECT

TREE SURVEY ID	COMMON NAME	DBH CLASS SIZE	EASTING	NORTHING	ALIGNMENT	STATION	OFFSET (FEET)	TREE MANAGEMENT RECOMMENDATION
683L	Valley Oak	1	6089998.56	1991387.42	Left Levee	66+14.27	-9.88	PROTECT
684L	Coast Live Oak	1	6090019.19	1991385.48	Left Levee	65+94.90	-3.11	REMOVE
685L	Box Elder	2	6090079.13	1991351.82	Left Levee	65+28.06	-14.22	PROTECT
686L	Box Elder	4	6090092.46	1991337.70	Left Levee	65+11.93	-24.18	PROTECT
687L	California buckeye	1	6090134.21	1991336.81	Left Levee	64+72.44	-15.69	INSPECT
688L	Blue Elderberry	0	6090058.81	1991352.89	Left Levee	65+47.17	-19.35	INSPECT
689L	Arroyo Willow	2	6090075.32	1991346.29	Left Levee	65+30.05	-20.61	PROTECT
690L	Arroyo Willow	1	6090094.29	1991339.86	Left Levee	65+10.77	-21.62	INSPECT
691L	Blue Elderberry	0	6090105.49	1991337.30	Left Levee	64+99.71	-21.34	INSPECT
692L	Blue Elderberry	2	6090148.60	1991360.17	Left Levee	64+62.57	9.89	REMOVE
693L	Eucalyptus	5	6090150.56	1991372.84	Left Levee	64+62.82	22.70	REMOVE
694L	Blue Elderberry	4	690129.60	1991361.87	Left Levee	64+81.85	7.97	REMOVE
695L	California buckeye	2	6090125.00	1991359.34	Left Levee	64+85.86	4.53	REMOVE
696L	Box Elder	1	6090111.54	1991359.00	Left Levee	64+98.97	1.18	REMOVE
697L	Coast Live Oak	1	6090081.99	1991366.58	Left Levee	65+29.53	0.74	REMOVE
846L	Arroyo Willow	5	6089693.52	1991644.24	Left Levee	68+91.47	199.93	REMOVE
847L	Arroyo Willow	3	6089689.89	1991648.77	Left Levee	68+93.45	205.39	REMOVE
848L	Arroyo Willow	2	6089698.65	1991668.51	Left Levee	68+78.78	221.25	REMOVE
849L	California Bay Laurel	2	6089664.97	1991660.18	Left Levee	69+13.35	224.23	REMOVE
850L	California Bay Laurel	2	6089655.56	1991663.91	Left Levee	69+21.06	230.79	REMOVE
851L	Arroyo Willow	1	6089696.18	1991660.87	Left Levee	68+83.59	214.81	REMOVE
358P	Brisbane Boxtree	1	6089642.51	1991471.57	Left Levee	70+44.99	-3.45	REMOVE
359P	Brisbane Boxtree	1	6089642.51	1991456.97	Left Levee	70+31.17	-8.15	REMOVE
360P	Brisbane Boxtree	1	6089653.97	1991443.54	Left Levee	70+14.76	-1.64	PROTECT
361P	Paperbark	2	6089587.98	1991437.12	Left Levee	70+29.98	-66.17	PROTECT
362P	Paperbark	2	6089574.26	1991432.01	Left Levee	71+81.24	-69.02	INSPECT
363P	Paperbark	2	6089559.36	1991427.95	Left Levee	71+96.65	-68.10	INSPECT
828R	Eucalyptus	3	6089935.98	1991556.61	Right Levee	66+19.91	-69.18	REMOVE
829R	Eucalyptus	1	6089930.28	1991561.46	Right Levee	66+27.24	-67.69	REMOVE
830R	Eucalyptus	3	6089934.93	1991556.43	Right Levee	66+20.74	-69.84	REMOVE

TREE SURVEY ID	COMMON NAME	DBH CLASS SIZE	EASTING	NORTHING	ALIGNMENT	STATION	OFFSET (FEET)	TREE MANAGEMENT RECOMMENDATION
831R	Eucalyptus	8	6089919.62	1991585.37	Right Levee	66+48.16	-51.96	REMOVE
832R	Eucalyptus	7	6089875.61	1991619.30	Right Levee	67+03.11	-43.64	REMOVE
833R	Eucalyptus	4	6089861.71	1991628.90	Right Levee	67+19.92	-42.00	REMOVE
834R	Eucalyptus	1	6089849.68	1991630.42	Right Levee	67+31.18	-46.50	INSPECT
835R	Eucalyptus	6	6089884.98	1991679.47	Right Levee	67+24.11	13.52	REMOVE
836R	Eucalyptus	3	6089822.07	1991668.36	Right Levee	67+73.72	-26.71	REMOVE
837R	Eucalyptus	3	6089814.38	1991669.96	Right Levee	67+81.23	-29.06	REMOVE
838R	Siberian Elm	4	6089659.64	1991799.13	Right Levee	69+79.20	8.84	REMOVE
839R	Siberian Elm	2	6089637.54	1991796.87	Right Levee	69+97.66	-3.26	REMOVE
840R	Coast Live Oak	2	6089626.06	1991800.96	Right Levee	70+09.97	-4.18	REMOVE
841R	Blue Elderberry	6	6089602.79	1991789.26	Right Levee	70+28.49	-23.40	REMOVE
842R	Lombardy Poplar	5	6089515.56	1991791.09	Right Levee	71+25.55	-35.41	REMOVE
843R	Acacia	3	6089481.90	1991810.91	Right Levee	71+60.59	-12.95	REMOVE
844R	Coast Live Oak	3	6089410.07	1991797.06	Right Levee	72+36.34	-6.59	REMOVE
845R	Coast Live Oak	2	6089397.67	1991788.83	Right Levee	72+51.48	-8.76	REMOVE
846R	Coast Live Oak	3	6089389.05	1991783.88	Right Levee	72+61.74	-9.13	REMOVE
847R	Coast Live Oak	1	6089386.55	1991782.56	Right Levee	72+64.66	-9.07	REMOVE
848R	Coast Live Oak	8	6089367.85	1991792.33	Right Levee	72+75.80	8.85	REMOVE
849R	Hind's Black Walnut	0	6089311.14	1991752.20	Right Levee	73+44.52	9.47	REMOVE

REV	DESCRIPTION	DATE	APPR.
	DRAFT 100% AUGUST 2014		

ICF INTERNATIONAL

DATE: JULY 2014
DESIGN: L. HOANG
DRAWN: L. HOANG
CHECKED: K. MACKAY

LANDSCAPE ARCHITECT
LANDSCAPE ARCHITECT STAMP
PROJECT ENGINEER DATE

SAN FRANCISQUITO CREEK JOINT POWERS AUTHORITY
ACCEPTED BY DISTRICT
PROJECT ENGINEER DATE

PROJECT NAME AND SHEET DESCRIPTION:
SAN FRANCISQUITO CREEK FLOOD REDUCTION, ECOSYSTEM RESTORATION, & RECREATION PROJECT
TREE DEMOLITION PLAN
R-LINE STATION 63+50 TO 74+00

SCALE: AS SHOWN
VERIFY SCALES: 0 1"
BAR IS ONE INCH ON ORIGINAL DRAWING IF NOT ONE INCH ON THIS SHEET, ADJUST SCALES ACCORDINGLY

PROJECT NUMBER: 26284002
SHEET CODE: L-15
SHEET NUMBER: 108 OF 119

DOCUMENT NUMBER: SFC_LP_C-1028-XXXXXX

USERNAME: BillShad Tue 08 Jul 2008 09:32am
FILENAME: C:\pwworking\sac\d0171341\L-10_L16

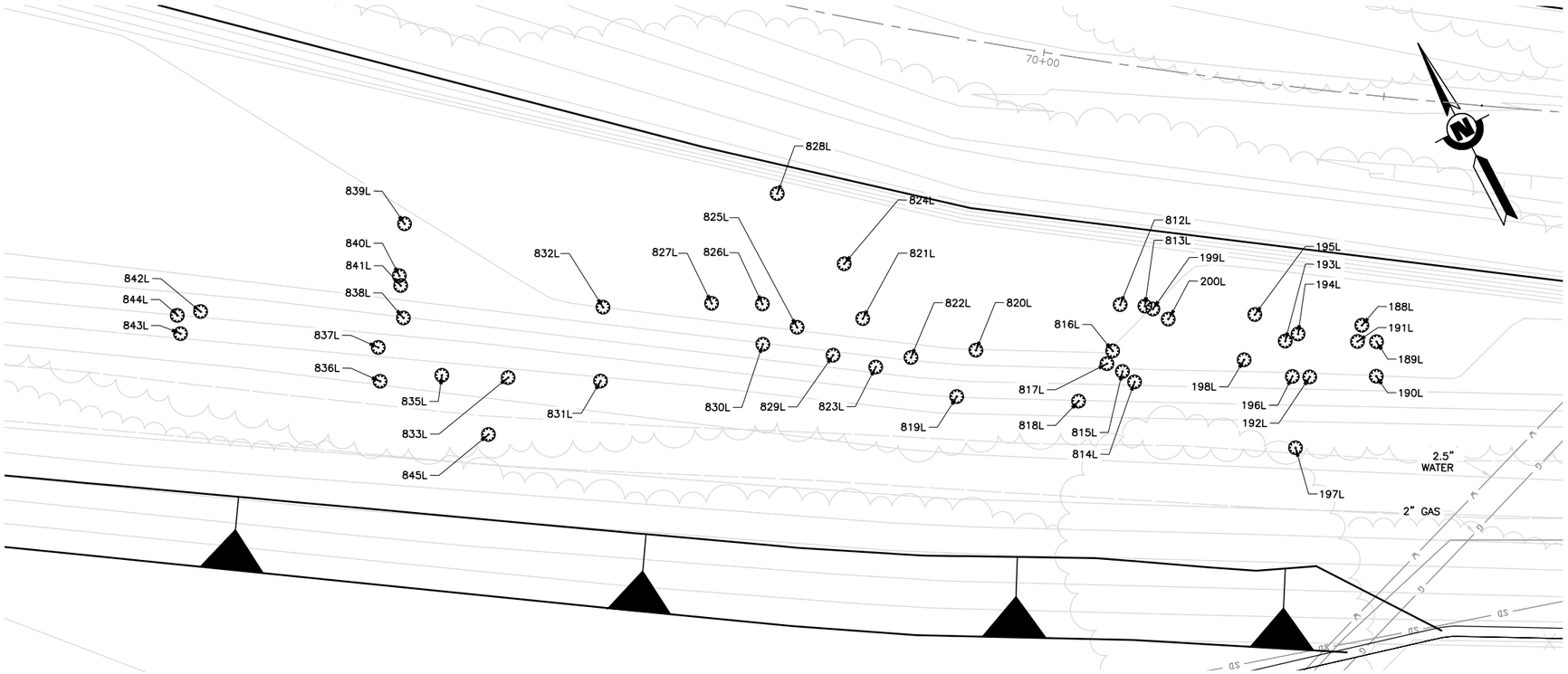

PLAN
SCALE: 1"=10'

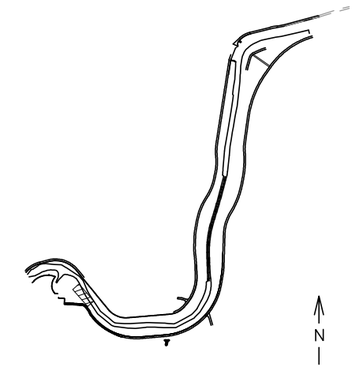

KEY MAP
SCALE: NTS

TREE SURVEY ID	COMMON NAME	DBH CLASS SIZE	EASTING	NORTHING	ALIGNMENT	STATION	OFFSET (FEET)	TREE MANAGEMENT RECOMMENDATION
188L	White Poplar	3	6089876.53	1991538.18	Left Levee	70+32.53	239.56	REMOVE
189L	White Poplar	1	6089877.35	1991535.08	Left Levee	70+29.32	239.33	REMOVE
190L	White Poplar	2	6089874.98	1991530.61	Left Levee	70+25.86	235.65	REMOVE
191L	White Poplar	2	6089874.87	1991536.39	Left Levee	67+81.98	52.81	REMOVE
192L	White Poplar	1	6089866.33	1991535.00	Left Levee	67+89.91	49.37	REMOVE
193L	White Poplar	2	6089865.56	1991541.28	Left Levee	70+39.00	230.17	REMOVE
194L	White Poplar	2	6089867.69	1991541.35	Left Levee	67+90.16	55.86	REMOVE
195L	White Poplar	2	6089863.40	1991546.76	Left Levee	70+44.88	229.90	REMOVE
196L	White Poplar	2	6089864.09	1991536.23	Left Levee	70+34.69	227.15	REMOVE
197L	White Poplar	2	6089859.72	1991526.78	Left Levee	70+27.15	219.96	REMOVE
198L	White Poplar	2	6089858.98	1991541.64	Left Levee	70+41.45	224.06	REMOVE
199L	White Poplar	1	6089850.60	1991554.34	Left Levee	70+56.19	220.23	REMOVE
200L	White Poplar	1	6089851.90	1991551.99	Left Levee	70+53.54	220.70	REMOVE
812L	White Poplar	1	6089846.65	1991557.11	Left Levee	70+60.08	217.38	REMOVE
813L	White Poplar	2	6089849.76	1991555.24	Left Levee	70+57.31	219.72	REMOVE
814L	White Poplar	1	6089843.32	1991546.14	Left Levee	70+50.77	210.69	REMOVE
815L	White Poplar	1	6089842.44	1991548.29	Left Levee	70+53.09	210.55	REMOVE
816L	White Poplar	1	6089842.57	1991551.63	Left Levee	70+56.21	211.75	REMOVE
817L	White Poplar	1	6089840.97	1991550.34	Left Levee	70+55.50	209.82	REMOVE
818L	White Poplar	7	6089834.77	1991547.40	Left Levee	70+54.72	203.01	REMOVE
819L	White Poplar	1	6089819.33	1991556.18	Left Levee	68+00.81	75.98	REMOVE
820L	White Poplar	2	6089824.92	1991560.88	Left Levee	67+94.00	78.63	REMOVE
821L	White Poplar	2	6089812.39	1991572.58	Left Levee	68+02.09	93.74	REMOVE

TREE SURVEY ID	COMMON NAME	DBH CLASS SIZE	EASTING	NORTHING	ALIGNMENT	STATION	OFFSET (FEET)	TREE MANAGEMENT RECOMMENDATION
822L	White Poplar	6	6089816.03	1991564.31	Left Levee	68+01.31	84.75	REMOVE
823L	Arroyo Willow	2	6089810.83	1991565.45	Left Levee	68+05.87	87.50	REMOVE
824L	Arroyo Willow	2	6089813.69	1991580.93	Left Levee	67+98.17	101.23	REMOVE
825L	White Poplar	2	6089803.32	1991575.88	Left Levee	68+09.60	99.79	REMOVE
826L	White Poplar	4	6089800.41	1991581.22	Left Levee	68+10.64	105.79	REMOVE
827L	White Poplar	1	6089793.87	1991584.72	Left Levee	68+15.70	111.21	REMOVE
828L	Unknown	1	6089809.74	1991594.50	Left Levee	67+97.52	115.35	REMOVE
829L	Arroyo Willow	2	6089806.11	1991569.83	Left Levee	68+08.92	93.17	REMOVE
830L	Eucalyptus	7	6089797.75	1991575.98	Left Levee	68+14.84	101.69	REMOVE
831L	Blue Elderberry	2	6089774.29	1991582.11	Left Levee	68+35.07	115.06	REMOVE
832L	Blue Elderberry	2	6089779.55	1991591.52	Left Levee	68+27.06	122.26	REMOVE
833L	River Redgum	3	6089762.57	1991588.77	Left Levee	68+44.02	125.14	REMOVE
835L	White Poplar	3	6089754.13	1991593.52	Left Levee	68+50.47	132.36	REMOVE
836L	White Poplar	2	6089745.74	1991596.88	Left Levee	68+57.33	138.25	REMOVE
837L	White Poplar	3	6089747.78	1991601.40	Left Levee	68+53.94	141.87	REMOVE
838L	White Poplar	2	6089753.00	1991603.52	Left Levee	68+48.32	142.20	REMOVE
839L	White Poplar	4	6089759.47	1991615.63	Left Levee	68+38.28	151.57	REMOVE
840L	Hind's Black Walnut	2	6089755.32	1991609.27	Left Levee	68+44.26	146.88	REMOVE
841L	Hind's Black Walnut	1	6089754.84	1991607.90	Left Levee	68+45.16	145.74	REMOVE
842L	White Poplar	4	6089727.21	1991617.98	Left Levee	68+68.06	164.20	REMOVE
843L	White Poplar	3	6089723.12	1991616.46	Left Levee	68+72.42	164.09	REMOVE
844L	White Poplar	5	6089723.93	1991619.05	Left Levee	68+70.82	166.28	REMOVE
845L	Arroyo Willow	1	6089756.18	1991582.73	Left Levee	68+52.02	121.49	REMOVE

LEGEND:

⊗ TREE SURVEY LOCATION

SHEET NOTES:

1. TREE SURVEY LOCATIONS LEFT OF THE CENTERLINE ALIGNMENT WILL HAVE POSITIVE OFFSET AND RIGHT OF THE CENTERLINE ALIGNMENT WILL HAVE A NEGATIVE OFFSET.

2. DIAMETER AT BREAST HEIGHT (DBH) WAS RECORDED IN INCHES BY DBH CLASS SIZE AT 4.5 FEET ABOVE GRADE, FOR EACH TRUNK. WHEN A TREE TRUNK FORKED BELOW THE DBH, THE DIAMETER WAS MEASURED AT THE NARROWEST PART OF THE MAIN STEM BELOW THE FORK AND THE LOCATION OF THE MEASUREMENT WAS RECORDED PER STANDARD ARBORICULTURE PROCEDURE. DBH CLASS SIZES INCLUDE:

1. 2 TO 6 INCHES DBH
2. 7 TO 12 INCHES DBH
3. 13 TO 18 INCHES DBH
4. 19 TO 24 INCHES DBH
5. 25 TO 30 INCHES DBH
6. 31 TO 36 INCHES DBH
7. 37 TO 42 INCHES DBH
8. GREATER THAN 42" DBH

3. MANAGEMENT REQUIREMENTS
   1. REMOVE – AS A RESULT OF CONSTRUCTION ACTIVITIES AND/OR DUE TO EXTREME OR MAJOR PROBLEMS.
   2. SAVE AND PROTECT – NO ACTION.

   THE FOLLOWING MANAGEMENT RECOMMENDATIONS REFER TO TREES RECOMMENDED TO BE SAVED AND PROTECTED.

   3. CLEAN – REMOVE DEAD, DYING, BROKEN, OR DISEASED WOOD GREATER THAN 2 INCHES IN DIAMETER.
   4. RAISE – PRUNE CANOPY TO PROVIDE CLEARANCE FOR CONSTRUCTION ACTIVITIES.
   5. REDUCE – PRUNE CANOPY TO MINIMIZE CONSTRUCTION IMPACT TO TREE.
   6. INSPECT – TREE WITH QUESTIONABLE HEALTH THAT MAY REQUIRE ADDITIONAL EVALUATION.
   7. REMOVE (1) OR SAVE AND INSPECT (6) – RECOMMENDATIONS FOR THESE INVASIVE SPECIES TO BE REVIEWED BASED ON OVERALL CONDITION, LOCATION, POTENTIAL FOR HABITAT VALUE, AND INVASIVE CHARACTER.
   8. RAISE (4) AND/OR REDUCE (5) – EXTENT OF TEMPORARY CONSTRUCTION IMPACTS TO BE DETERMINED.

4. ONLY TREES DESIGNATED FOR REMOVAL ARE TO BE REMOVED. ALL OTHER TREES ARE TO REMAIN AND SHALL BE PROTECTED UNLESS DIRECTED OTHERWISE BY THE ENGINEER.

REV	DESCRIPTION	DATE	APPR.
	DRAFT 100% AUGUST 2014		

ICF INTERNATIONAL

DATE: JULY 2014
DESIGN: L.HOANG
DRAWN: L.HOANG
CHECKED: K.MACKAY

LANDSCAPE ARCHITECT
LANDSCAPE ARCHITECT STAMP
PROJECT ENGINEER DATE

SAN FRANCISQUITO CREEK JOINT POWERS AUTHORITY
ACCEPTED BY DISTRICT
PROJECT ENGINEER DATE

PROJECT NAME AND SHEET DESCRIPTION:
SAN FRANCISQUITO CREEK FLOOD REDUCTION, ECOSYSTEM RESTORATION, & RECREATION PROJECT
TREE DEMOLITION PLAN
R-LINE STATION 66+50 TO 68+50

SCALE: AS SHOWN
VERIFY SCALES: 0 — 1"
BAR IS ONE INCH ON ORIGINAL DRAWING IF NOT ONE INCH ON THIS SHEET, ADJUST SCALES ACCORDINGLY

PROJECT NUMBER: 26284002
SHEET CODE: L-16
SHEET NUMBER: 109 OF 119

DOCUMENT NUMBER: SFC_LP-C-1028-XXXXXX

USERNAME: BillShad Tue 08 Jul 2008 09:32am
FILENAME: C:\pwworking\sac\d0171341\L-10_L16

GENERAL IRRIGATION NOTES

1. SEE TECHNICAL SPECIFICATIONS AND GENERAL NOTES FOR ADDITIONAL INFORMATION TO CONSIDER IN IRRIGATION SYSTEM INSTALLATION INCLUDING INFRASTRUCTURE AND UTILITIES PROTECTION AND REPAIR INFORMATION.
2. IRRIGATION MAINLINE AND EQUIPMENT ARE SHOWN DIAGRAMMATICALLY TO CONVEY INSTALLATION INTENT WITH GRAPHIC CLARITY. THE CONTRACTOR SHALL NOT INSTALL THE IRRIGATION SYSTEM AS DIAGRAMMATICALLY SHOWN IF OBSTRUCTIONS, INFRASTRUCTURE, GRADE CHANGES, OR OTHER BARRIERS EXIST IN THE FIELD THAT MIGHT NOT HAVE BEEN FORESEEN, CONSIDERED, OR IN EXISTENCE DURING IRRIGATION DESIGN. NOTIFY ENGINEER IF THE INSTALLATION OF THE SYSTEM IS NOT FEASIBLE AS DIAGRAMMATICALLY SHOWN PRIOR TO PROCEEDING. IF CONFLICTS ARE NOT REPORTED TO THE ENGINEER, THE CONTRACTOR SHALL ASSUME FULL RESPONSIBILITY FOR ANY NECESSARY CHANGES REQUIRED TO MAKE THE SYSTEM FULLY FUNCTIONAL AT NO ADDITIONAL COST TO OWNER.
3. CONTRACTOR SHALL VERIFY STATIC WATER PRESSURE AT POINT OF CONNECTION PRIOR TO INSTALLING IRRIGATION SYSTEM. SHOULD STATIC WATER PRESSURE BE LESS THAN 80 PSI, CONTRACTOR SHALL NOTIFY ENGINEER FOR INSTRUCTIONS PRIOR TO PROCEEDING WITH INSTALLATION. THE SYSTEM DESIGN IS BASED ON 40 GPM BEING AVAILABLE AT THE POINT OF CONNECTION. THE CONTRACTOR IS RESPONSIBLE FOR VERIFYING THESE REPORTED READINGS PRIOR TO CONSTRUCTION AND SHALL CEASE CONSTRUCTION ACTIVITY AT ONCE IF AVAILABLE WATER PRESSURE AND VOLUME VARY FROM PREVIOUSLY REPORTED FIGURES. IF WATER PRESSURE AND VOLUME DISCREPANCIES ARE NOT REPORTED TO THE ENGINEER PRIOR TO START OF CONSTRUCTION, THE CONTRACTOR SHALL ASSUME FULL RESPONSIBILITY FOR ANY NECESSARY CHANGES REQUIRED TO MAKE THE SYSTEM FULLY FUNCTIONAL AT NO ADDITIONAL COST TO OWNER.
4. CONTRACTOR SHALL VERIFY LOCATIONS OF EXISTING UTILITIES PRIOR TO CONSTRUCTION.
5. FOLLOW ALL LOCAL CODES WHEN INSTALLING IRRIGATION SYSTEM. FOLLOW MANUFACTURER'S SPECIFICATIONS DURING INSTALLATION. NOTIFY ENGINEER OF ANY CODE CONFLICTS WITH THE DESIGN PRIOR TO STARTING WORK.
6. ALL MATERIALS AND EQUIPMENT SHALL BE NEW. THE CONTRACTOR SHALL INSTALL MATERIALS AND EQUIPMENT TO PROVIDE THE MOST EFFICIENT AND OPTIMUM OPERATING SYSTEM. FIELD ADJUSTMENTS MAY BE REQUIRED.
7. ALL TRENCHING IN AREAS UNDER EXISTING TREE CANOPIES SHALL BE DONE BY HAND, WITH CARE TAKEN NOT TO DAMAGE THE ROOT SYSTEMS OF THESE TREES. DO NOT WATER CALIFORNIA NATIVE OAK TREES DURING THE DRY SEASON. TREES THAT DIE DURING THE CONSTRUCTION OR MAINTENANCE PERIOD SHALL BE REPLACED BY THE CONTRACTOR AT NOT COST TO THE OWNER AT THEIR CURRENT SIZE.
8. TRENCHES AND CONTROL VALVES SHALL BE LOCATED AT THE BACK OF MAINTENANCE ROAD, WALKWAY, OR TRAIL WHEREVER POSSIBLE. TRENCHES AND CONTROL VALVES SHALL BE LOCATED 12" FROM MAINTENANCE ROAD, SIDEWALKS, TRAILS, OR WALLS UNLESS NOTED OTHERWISE.
9. MAXIMUM WIRE RUN DISTANCE BETWEEN BATTERY CONTROLLER AND CONTROL VALVE SHALL BE 100 FEET USING 18 AWG WIRE.
10. CONTRACTOR SHALL PRESSURE AND LEAK TEST IRRIGATION LINES PRIOR TO BACKFILLING TRENCHES. THE CONTRACTOR SHALL MAKE ANY ADJUSTMENTS REQUIRED TO SYSTEM TO ENSURE OPERABILITY PRIOR TO BACKFILLING TRENCHES.
11. THE LOCATION OF THE AUTOMATIC CONTROLLERS SHALL BE MARKED WITH A 36" WOODEN STAKE.
12. ALL IRRIGATION COMPONENTS SHALL BE PURPLE IN COLOR WHEN AVAILABLE.
13. THE CONTRACTOR SHALL PROVIDE THE ENGINEER ONE OPERATING KEY, TWO SETS OF LOCKING COVER KEYS, AND ONE HOSE SWIVEL FOR QUICK COUPLING VALVES.
14. THE CONTRACTOR SHALL INCLUDE IN THEIR BID 50 EXTRA IRRIGATION EMITTERS FOR USE IN THE INSTALLATION PROCESS FOR POSSIBLE FIELD CHANGES. ALL EXTRA IRRIGATION COMPONENTS SHALL BE GIVEN TO THE ENGINEER AT THE END OF THE MAINTENANCE PERIOD.
15. OPERATE IRRIGATION CONTROLLER BETWEEN THE HOURS OF 5:00 PM AND 7:00 AM.
16. PRIOR TO TRENCHING, CALL UNDERGROUND SERVICE ALERT, (800) 642-2444 FOR NORTHERN CALIFORNIA.
17. SHOULD THERE BE DROUGHT CONDITIONS, THE MITIGATION DRAINAGE DITCH PLANTINGS SHALL BE SUPPLEMENTAL IRRIGATED UP TO TWICE PER MONTH NOVEMBER 1 – APRIL 30 PER THE ENGINEER; WATER SHALL BE APPLIED WITH A NON-TRACK MOUNTED TRUCK EQUIPPED WITH A SIDE SPRAY WATER CANNON CAPABLE OF SPRAYING 100 FEET; ACCESS WILL BE ALONG THE SOUTHERN RIM; APPLY 15,000 GALLONS OF WATER TOTAL TO THE BASIN EACH IRRIGATION APPLICATION; WATER WILL BE SUPPLY BY THE CITY FROM A WATER HYDRANT ON WEST JACK LONDON BLVD.

IRRIGATION LEGEND

DETAIL REFERENCE	PLAN VIEW SYMBOL	APPURTENANCE	MODEL NUMBER	MANUFACTURER/NOTES
	M	NEW METER AT IRRIGATION POINT OF CONNECTION (POC)		TIE INTO EXISTING WATER LINE STUBS AS SHOWN ON THE PLANS; INSTALL 1" POTABLE WATER METER PER CITY OF PALO ALTO SPECIFICATION SECTION 02660 AND PER CITY STANDARD DETAILS W-02-B, WD-01, WGW-02 AND WGW-04
	X	IRRIGATION BACKFLOW		REDUCED PRESSURE BACKFLOW PREVENTER ASSEMBLY WITH PRESSURE REDUCING VALVE AND INSULATED ENCLOSURE PER CITY OF PALO ALTO SPECIFICATION SECTION 02660 AND PER CITY STANDARD DETAILS WD-17, WGW-02 AND WGW-04
1/L-19		SYSTEM FILTER	AF 1.5-150	ACTION MACHINING 90 DEGREE LANDSCAPE FILTER, OR APPROVED EQUAL, WITH 150 MESH SCREEN INSTALLED IN RECTANGLE BOX WITH PURPLE LOCKING LID
2/L-19	A B	BATTERY OPERATED CONTROLLER	NODE-100 (1-STATION) NODE-200 (2-STATION)	HUNTER BATTERY OPERATED CONTROLLER; INSTALL IN GRADE LEVEL ENCLOSURE DIRECTLY ADJACENT TO CONTROL VALVE BOX.
3/L-19		GATE VALVE	T-113-K	NIBCO GATE VALVE, OR APPROVED EQUAL, (LINE SIZE) IN ROUND BOX WITH PURPLE LOCKING LID
	⊗	BALL VALVE	BTU-(LINE SIZE)	KING BROTHERS, SCH 80 BLOCKED TRUE UNION BALL VALVE OR APPROVED EQUAL
4/L-19		CONTROL VALVE WITH PRESSURE REGULATING FILTER	100-PESB PRB-100	RAINBIRD, 100-PESB-R, 1" CONTROL VALVE, WITH RAINBIRD PRB-100, 1" PRESSURE REGULATING BASKET FILTER; INSTALL BASKET FILTER DOWNSTREAM OF VALVE; INSTALL DC LATCHING SOLENOID (RAINBIRD TBOSPSOL) TO CONNECT TO HUNTER BATTERY OPERATED CONTROLLER; VALVE LOCATIONS ON PLANS ARE APPROXIMATE TO SHOW CLUSTERING
5/L-19		QUICK COUPLING VALVE	33-DLRC	RAIN BIRD / 3/4" QUICK COUPLING VALVE, OR APPROVED EQUAL, WITH LOCKING COVER IN ROUND VALVE BOX
6/L-19	NOT SHOWN	DRIP EMITTER	XB-20PC-1032 W/ PFR-FRA	RAIN BIRD / XERI-BUG PRESSURE COMPENSATING EMITTER WITH 10-32 THREADED INLET, 2.0 GPH, INSTALL ON RAIN BIRD 12" POLYFLEX RISER, OR APPROVED EQUAL; INSTALL 2 PER INDIVIDUAL PLANT; INSTALL 1 PER EACH PLANT WITHIN CLUSTERS
7/L-19		MAINLINE		IRRIGATION MAINLINE, SCH 40 PVC PIPE, 2" SIZE THROUGHOUT, INSTALL ON-GRADE ON LEVEE SLOPES; ANCHOR WITH 36" REBAR J-HOOK AT 6' O.C. SPACING; 18" MINIMUM BURIAL ELSEWHERE, INSTALL WARNING TAPE ABOVE LINE, INSTALL PER SPECIFICATIONS
7/L-19	NOT SHOWN	LATERAL		IRRIGATION LATERAL, SCH 40 PVC PIPE, SIZE PER CHART, 12" MINIMUM BURIAL, PLACE PARALLEL WITH SLOPE CONTOURS; INSTALL PER SPECIFICATIONS
7/L-19		SLEEVING		SCHEDULE 40 PVC PIPE, SIZE SHALL BE TWICE THE DIAMETER OF PIPE BEING RECEIVED BY SLEEVE

A01 | 50/90/50
1" | 30.0 GPM

VALVE NUMBER
OF PLANTS SERVICED BY VALVE (# OF INDIVIDUAL PLANTS/# OF PLANTS IN CLUSTERS OF 3/# OF PLANTS IN CLUSTERS OF 5)
APPROXIMATE FLOW THROUGH VALVE
SIZE OF VALVE

LATERAL PIPE SIZING CHART

NUMBER OF EMITTERS	1-60	61-120	121-270	271-360	361-800
PIPE SIZE	3/4"	1"	1-1/4"	1-1/2"	2"

USERNAME: BillShad Tue 08 Jul 2008 09:32am
FILENAME: C:\pwworking\sac\d0171341\L-17_L-26
DOCUMENT NUMBER:SFC_LP-C-1028-XXXXXXX

REV	DESCRIPTION	DATE	APPR.
	DRAFT 100% AUGUST 2014		

ICF INTERNATIONAL

DATE JULY 2014
DESIGN K. LANTZ
DRAWN L. HOANG
CHECKED K. MACKAY

LANDSCAPE ARCHITECT
LANDSCAPE ARCHITECT STAMP
PROJECT ENGINEER DATE

SAN FRANCISQUITO CREEK JOINT POWERS AUTHORITY
ACCEPTED BY DISTRICT
PROJECT ENGINEER DATE

PROJECT NAME AND SHEET DESCRIPTION:
SAN FRANCISQUITO CREEK FLOOD REDUCTION, ECOSYSTEM RESTORATION, & RECREATION PROJECT
IRRIGATION NOTES & LEGEND

SCALE: NOT TO SCALE
VERIFY SCALES 0 1"
BAR IS ONE INCH ON ORIGINAL DRAWING IF NOT ONE INCH ON THIS SHEET, ADJUST SCALES ACCORDINGLY

PROJECT NUMBER 26284002
SHEET CODE: L-17
SHEET NUMBER: 110 OF 119

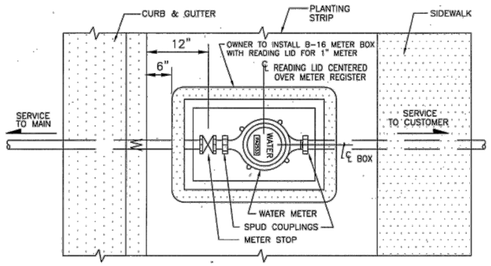

PLAN

GUIDELINES FOR WATER METER INSTALLATION:

THESE GUIDELINES ARE IN ACCORDANCE WITH THE CITY OF PALO ALTO'S RULES AND REGULATIONS 21.E AND THE UNIFORM PLUMBING CODE.

1. THE CITY WILL PROVIDE A METER (5/8", 1", 1-1/2", OR 2"), SPUD COUPLINGS, FLANGES, GASKETS, AND WASHERS. IT IS THE CUSTOMER'S RESPONSIBILITY TO MAKE THE DOWNSTREAM METER CONNECTION.
2. ALL METERS WILL BE INSTALLED WITHIN THREE WORKING DAYS FROM THE DATE THE METER REQUEST IS PROCESSED BY UTILITY ENGINEERING AND THE BUSINESS OFFICE.
3. WATER METER UPGRADES – ALL REQUESTS FOR UPGRADES MUST BE PROCESSED THROUGH UTILITY ENGINEERING.
4. THE LOCATION OF THE METER BOX MUST BE IN ITS PERMANENT POSITION (AT GRADE, LEVEL AND CENTERED) BEFORE THE METER IS INSTALLED.
5. WATER METER BOX REPLACEMENT ON EXISTING SERVICE – THE CITY WILL FURNISH NEW METER BOX & COVER. IT IS THE CUSTOMER'S RESPONSIBILITY TO INSTALL NEW BOX AT FINISHED GRADE.
6. IT IS THE CUSTOMER'S RESPONSIBILITY TO KEEP THE METER BOX AT GRADE, LEVEL AND FREE OF ALL VEGETATION.
7. ALL WATER METERS HAVE DIFFERENT SIZE BOXES: 5/8"–B9, 1"–B16, 1½"–B30, AND 2"–B36
8. ANY QUESTIONS REGARDING THE ABOVE REFERENCED INFORMATION SHOULD BE DIRECTED TO THE ATTENTION OF THE WATER METER SHOP.

BY	DATE	WATER METER & BOX INSTALLATION STANDARD DETAIL	APPROVED: JUNE 8, 1998 ROGER CWIAK CHIEF ENGINEER R.E. NO. 34533	SCALE: NONE
DRAWN J.J.	8/93			DWG. NO. STD. WD-02-B
CHECKED R.E.	3/98			
REVIEWED J.J.	6/98	CITY OF PALO ALTO, CALIFORNIA	REVISION: JUNE 29, 2005	APPENDIX B

WD-02-B.dwg

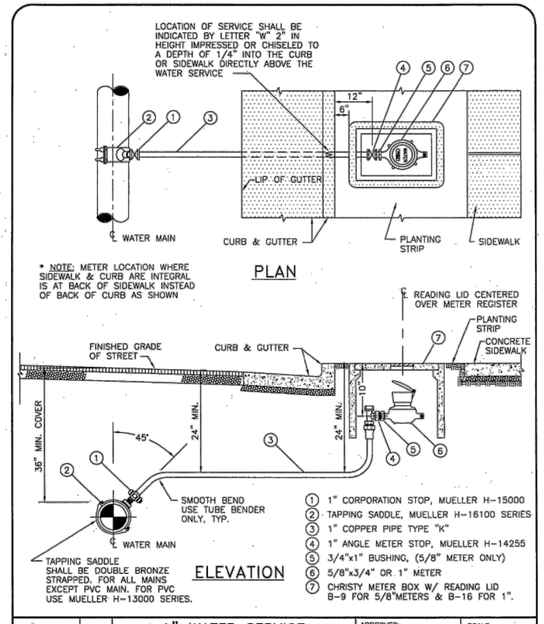

PLAN

ELEVATION

BY	DATE	1" WATER SERVICE CONNECTION STANDARD DETAIL	APPROVED: OCTOBER, 30 1992 ROGER CWIAK CHIEF ENGINEER R.E. NO. 34533	SCALE: NONE
DRAWN J.J.	2/92			DWG. NO. STD. WD-01
CHECKED J.J.	5/92			
REVIEWED R.C.	10/92	CITY OF PALO ALTO, CALIFORNIA	REVISION: JUNE 8, 1998	APPENDIX B

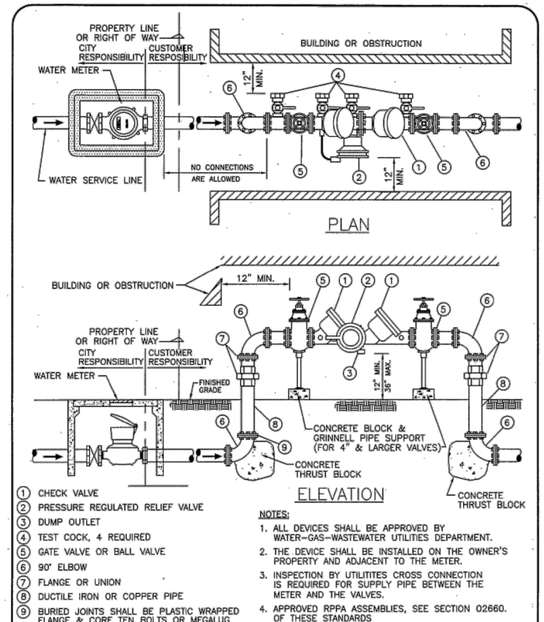

PLAN

ELEVATION

1. CHECK VALVE
2. PRESSURE REGULATED RELIEF VALVE
3. DUMP OUTLET
4. TEST COCK, 4 REQUIRED
5. GATE VALVE OR BALL VALVE
6. 90° ELBOW
7. FLANGE OR UNION
8. DUCTILE IRON OR COPPER PIPE
9. BURIED JOINTS SHALL BE PLASTIC WRAPPED FLANGE & CORE TEN BOLTS OR MEGALUG

NOTES:

1. ALL DEVICES SHALL BE APPROVED BY WATER–GAS–WASTEWATER UTILITIES DEPARTMENT.
2. THE DEVICE SHALL BE INSTALLED ON THE OWNER'S PROPERTY AND ADJACENT TO THE METER.
3. INSPECTION BY UTILITITES CROSS CONNECTION IS REQUIRED FOR SUPPLY PIPE BETWEEN THE METER AND THE VALVES.
4. APPROVED RPPA ASSEMBLIES, SEE SECTION 02660. OF THESE STANDARDS

BY	DATE	REDUCED PRESSURE PRINCIPLE ASSEMBLY – RPPA STANDARD DETAIL	APPROVED: OCTOBER, 30 1992 ROGER CWIAK CHIEF ENGINEER R.E. NO. 34533	SCALE: NONE
DRAWN J.J.	8/92			DWG. NO. STD. WD-17
CHECKED J.J.	8/92			
REVIEWED R.E.	4/98	CITY OF PALO ALTO, CALIFORNIA	REVISION: JUNE 8, 1998	APPENDIX B

USERNAME: BillShad Tue 08 Jul 2008 09:32am
FILENAME: C:\pwworking\sac\d0171341\L-17_L-26

DOCUMENT NUMBER:SFC_LP-C-1028-XXXXXXX

REV	DESCRIPTION	DATE	APPR.
	DRAFT 100% AUGUST 2014		

ICF INTERNATIONAL

DATE JULY 2014
DESIGN K. LANTZ
DRAWN L. HOANG
CHECKED K. MACKAY

LANDSCAPE ARCHITECT
LANDSCAPE ARCHITECT STAMP
PROJECT ENGINEER DATE

SAN FRANCISQUITO CREEK JOINT POWERS AUTHORITY
ACCEPTED BY DISTRICT
PROJECT ENGINEER DATE

PROJECT NAME AND SHEET DESCRIPTION:
SAN FRANCISQUITO CREEK FLOOD REDUCTION, ECOSYSTEM RESTORATION, & RECREATION PROJECT
CITY STANDARD IRRIGATION DETAILS

SCALE NOT TO SCALE
VERIFY SCALES 0 1"
BAR IS ONE INCH ON ORIGINAL DRAWING IF NOT ONE INCH ON THIS SHEET, ADJUST SCALES ACCORDINGLY

PROJECT NUMBER 26284002
SHEET CODE: L-18
SHEET NUMBER: 111 OF 119

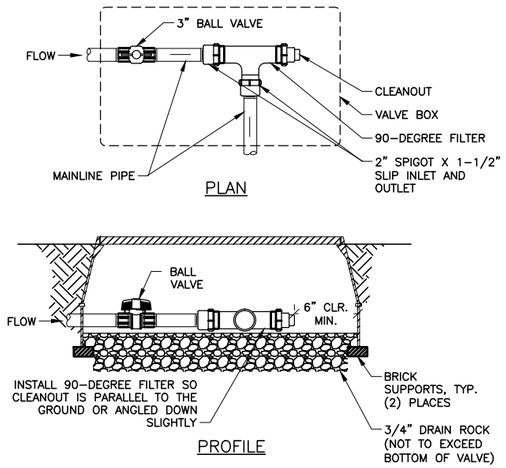

DETAIL 1 / L-19 SYSTEM FILTER

NTS

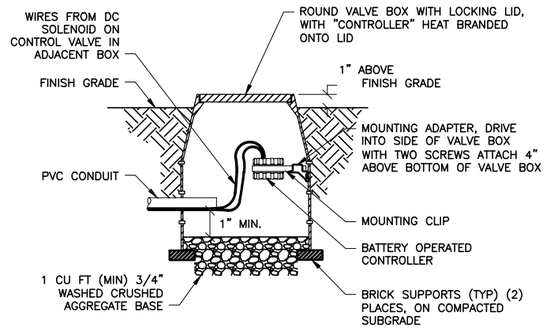

NOTES:

1. REFER TO IRRIGATION LEGEND FOR MANUFACTURERS AND MODELS.
2. INSTALL VALVE BOX SO THAT TOP OF BOX IS FLUSH WITH ADJACENT HARDSCAPE.
3. PLACE 3/4" DRAIN ROCK PRIOR TO INSTALLING VALVE BOX.
4. REFER TO SPECIFICATIONS AND PLAN SHEETS FOR ADDITIONAL INFORMATION.

DETAIL 2 / L-19 BATTERY OPERATED CONTROLLER

NTS

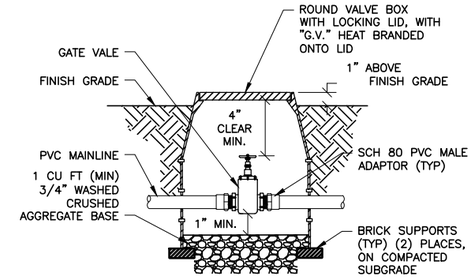

NOTES:

1. REFER TO IRRIGATION LEGEND FOR MANUFACTURERS AND MODELS.
2. INSTALL GATE VALVE A MINIMUM OF 12" FROM STRUCTURES OR HARDSCAPE.
3. INSTALL GATE VALVE IN PLANTING BEDS WHEREVER POSSIBLE.
4. INSTALL VALVE BOX SO THAT TOP OF BOX IS FLUSH WITH ADJACENT HARDSCAPE.
5. USE TEFLON TAPE ON ALL THREADED FITTINGS.
6. PLACE 3/4" DRAIN ROCK PRIOR TO INSTALLING VALVE BOX.
7. REFER TO SPECIFICATIONS AND PLAN SHEETS FOR ADDITIONAL INFORMATION.

DETAIL 3 / L-19 GATE VALVE

NTS

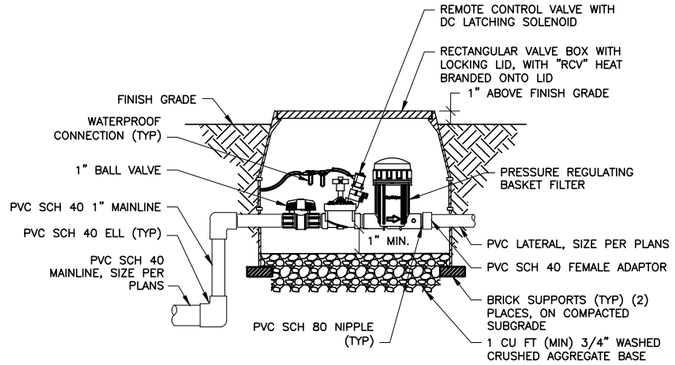

NOTES:

1. REFER TO IRRIGATION LEGEND FOR MANUFACTURERS AND MODELS.
2. INSTALL VALVE BOX SO THAT TOP OF BOX IS FLUSH WITH ADJACENT HARDSCAPE.
3. USE TEFLON TAPE ON ALL THREADED FITTINGS.
4. PLACE 3/4" DRAIN ROCK PRIOR TO INSTALLING VALVE BOX.
5. REFER TO SPECIFICATIONS AND PLAN SHEETS FOR ADDITIONAL INFORMATION.

DETAIL 4 / L-19 CONTROL VALVE WITH FILTER AND BALL VALVE

NTS

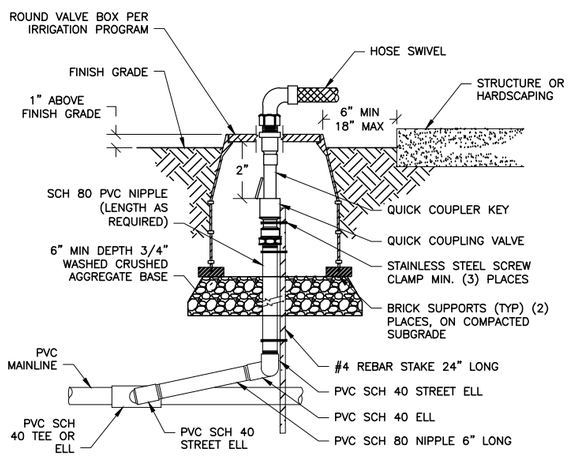

NOTES:

1. REFER TO IRRIGATION LEGEND FOR MANUFACTURERS AND MODELS.
2. INSTALL QUICK COUPLING VALVE IN PLANTING BEDS WHEREVER POSSIBLE.
3. INSTALL VALVE BOX SO THAT TOP OF BOX IS FLUSH WITH ADJACENT HARDSCAPE.
4. USE TEFLON TAPE ON ALL THREADED FITTINGS.
5. PLACE 3/4" DRAIN ROCK PRIOR TO INSTALLING VALVE BOX.
6. REFER TO SPECIFICATIONS AND PLAN SHEETS FOR ADDITIONAL INFORMATION.

DETAIL 5 / L-19 QUICK COUPLING VALVE

NTS

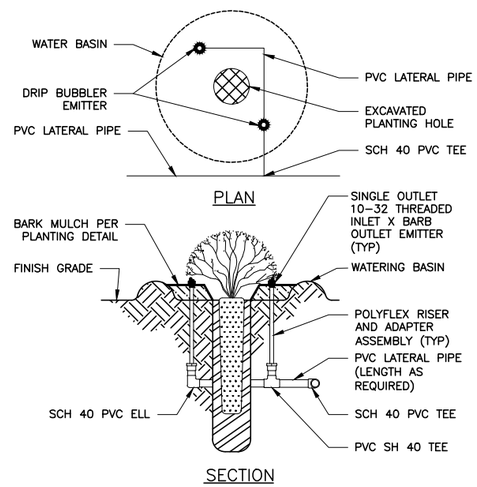

NOTES:

1. INSTALL 2 PER INDIVIDUAL PLANT IN ALL PLANTING ZONES.
2. INSTALL 2 PER EACH PLANT WITHIN CLUSTERS IN THE BUFFER PLANTING ZONE.
3. INSTALL 1 PER EACH PLANT WITHIN CLUSTERS IN THE RIPARIAN AND BENCH PLANTING ZONE.
4. LATERAL PIPE SHALL BE A MIN OF 2" AWAY FROM ROOTBALL.
5. REFER TO IRRIGATION LEGEND FOR MANUFACTURERS AND MODELS AND NUMBER OF EMITTERS TO INSTALL AT EACH LOCATION.
6. REFER TO SPECIFICATIONS AND PLAN SHEETS FOR ADDITIONAL INFORMATION.

DETAIL 6 / L-19 DRIP EMITTER

NTS

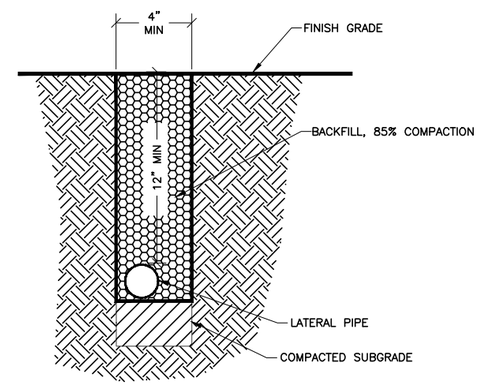

SECTION:
LATERAL LINE TRENCH

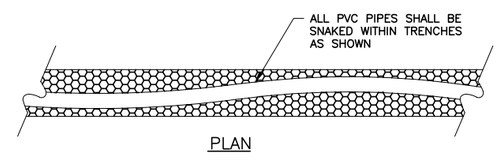

NOTES:

1. REFER TO IRRIGATION LEGEND FOR MANUFACTURERS AND MODELS.
2. TRENCH DEPTHS ARE MEASURED FROM TOP OF FINISHED GRADE.
3. ALL PIPE TO BE INSTALLED IN ACCORDANCE WITH MANUFACTURER'S INSTALLATION SPECIFICATIONS.
4. BACKFILL TRENCHES, AFTER SYSTEM HAS BEEN CHARGED TO TEST FOR LEAKS, WITH CLEAN BACKFILL.
5. REFER TO SPECIFICATIONS AND PLAN SHEETS FOR ADDITIONAL INFORMATION.

DETAIL 7 / L-19 PIPE TRENCHING

NTS

REV	DESCRIPTION	DATE	APPR.
	DRAFT 100% AUGUST 2014		

ICF INTERNATIONAL

DATE	LANDSCAPE ARCHITECT
JULY 2014	LANDSCAPE ARCHITECT STAMP
DESIGN K. LANTZ	
DRAWN L. HOANG	
CHECKED K. MACKAY	PROJECT ENGINEER DATE

SAN FRANCISQUITO CREEK JOINT POWERS AUTHORITY

ACCEPTED BY DISTRICT

PROJECT ENGINEER DATE

PROJECT NAME AND SHEET DESCRIPTION:

SAN FRANCISQUITO CREEK FLOOD REDUCTION, ECOSYSTEM RESTORATION, & RECREATION PROJECT

IRRIGATION DETAILS

SCALE: NOT TO SCALE

VERIFY SCALES: 0 — 1"

BAR IS ONE INCH ON ORIGINAL DRAWING IF NOT ONE INCH ON THIS SHEET, ADJUST SCALES ACCORDINGLY

PROJECT NUMBER: 26284002

SHEET CODE: L-19

SHEET NUMBER: 106 OF 119

DOCUMENT NUMBER: SFC_LP-C-1028-XXXXXXX

USERNAME: BillShad Tue 08 Jul 2008 09:32am
FILENAME: C:\pwworking\sac\d0171341\L-17_L-26

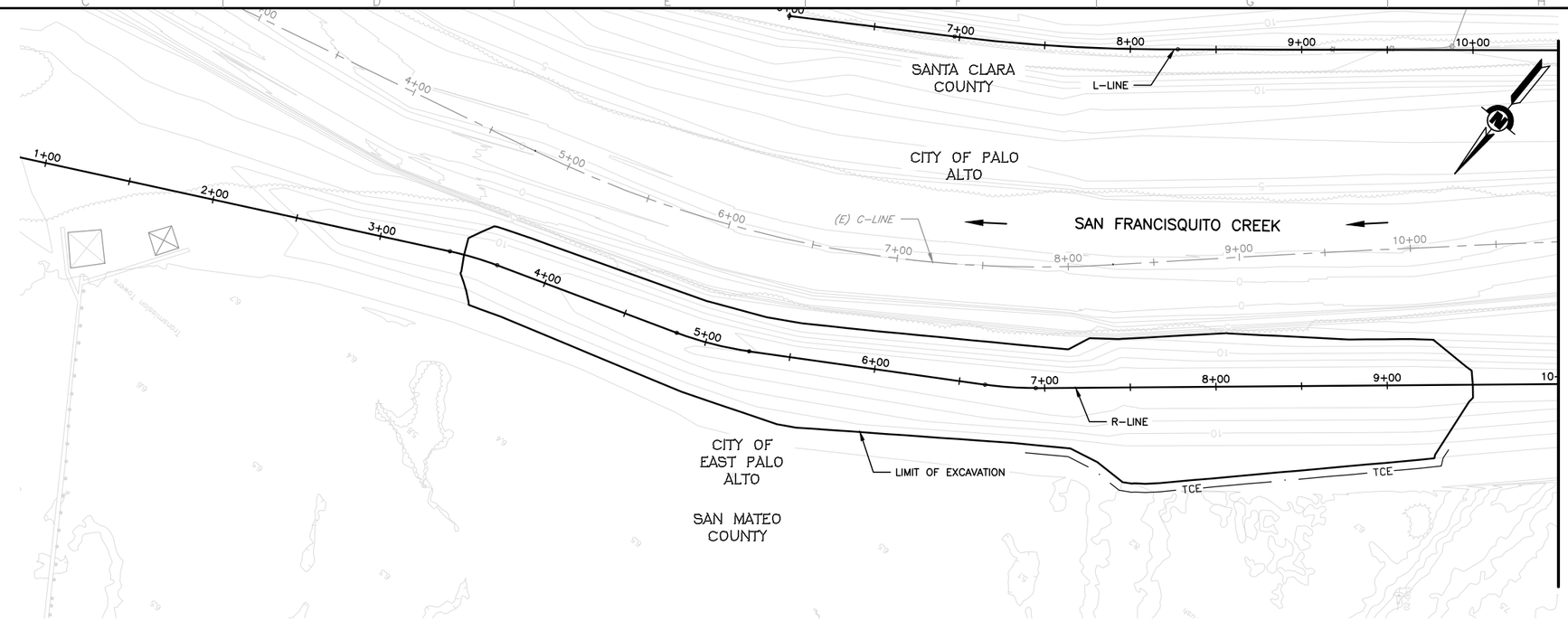

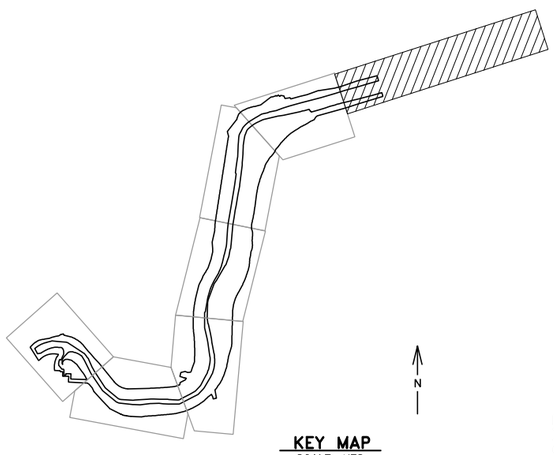

KEY MAP
SCALE: NTS

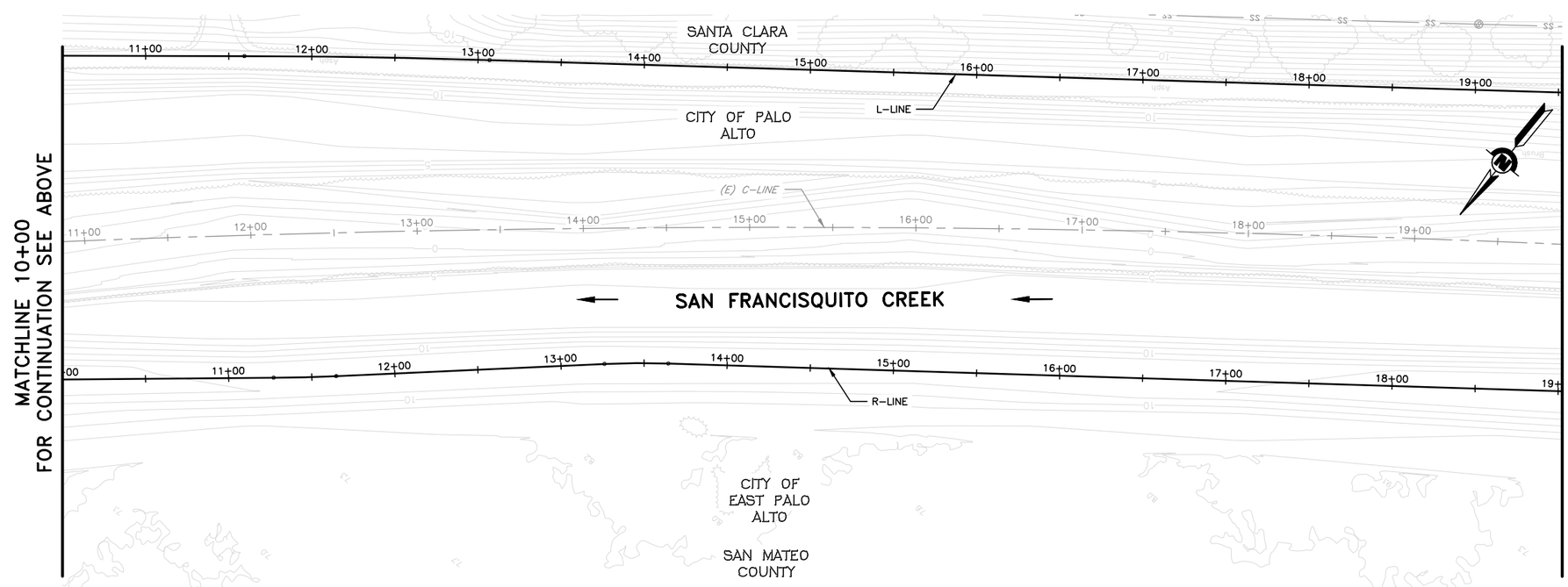

LEGEND:

- HIGH MARSH TRANSITION PLANTING ZONE
- HIGH MARSH PLANTING ZONE
- EROSION CONTROL SEED MIX
- ROCK SLOPE PROTECTION

SHEET NOTES:

1. SEE SHEET L-8 AND L-9 FOR PLANTING PALETTE AND DETAILS.
2. HIGH MARSH AND HIGH MARSH TRANSITION PLANT QUANTITIES ARE SHOWN PER SHEET (L-1 TO L-7).

REV	DESCRIPTION	DATE	APPR.
	DRAFT 100% AUGUST 2014		

ICF INTERNATIONAL

DATE	JULY 2014
DESIGN	K. LANTZ
DRAWN	L. HOANG
CHECKED	K. MACKAY

LANDSCAPE ARCHITECT
LANDSCAPE ARCHITECT STAMP
PROJECT ENGINEER DATE

SAN FRANCISQUITO CREEK JOINT POWERS AUTHORITY
ACCEPTED BY DISTRICT
PROJECT ENGINEER DATE

PROJECT NAME AND SHEET DESCRIPTION:
SAN FRANCISQUITO CREEK FLOOD REDUCTION, ECOSYSTEM RESTORATION, & RECREATION PROJECT
IRRIGATION PLAN
R-LINE STATION 9+00 TO 19+00

SCALE: 1" = 40'
VERIFY SCALES: 0 1"
BAR IS ONE INCH ON ORIGINAL DRAWING IF NOT ONE INCH ON THIS SHEET, ADJUST SCALES ACCORDINGLY

PROJECT NUMBER: 26284002
SHEET CODE: L-20
SHEET NUMBER: 113 OF 119

DOCUMENT NUMBER: SFC_LP-C-1028-XXXXXXX
USERNAME: BillShad Tue 08 Jul 2008 09:32am
FILENAME: C:\pwworking\sac\d0171341\L-17_L-26

MATCHLINE 19+00 – FOR CONTINUATION SEE SHEET L-20

MATCHLINE 29+00 – FOR CONTINUATION SEE SHEET L-22

SANTA CLARA COUNTY

CITY OF PALO ALTO

CITY OF EAST PALO ALTO

SAN MATEO COUNTY

SAN FRANCISQUITO CREEK

L-LINE

C-LINE

R-LINE

TCE

SD

SS

E01 | 56/474/70
1" | 21.87 GPM

A03 | 68/570/90
1" | 26.53 GPM

A02 | 68/573/90
1" | 26.63 GPM

A01 | 68/573/90
1" | 26.63 GPM

ROCK SLOPE PROTECTION, SEE CIVIL PLANS

20+00 21+00 22+00 23+00 24+00 25+00 26+00 27+00 28+00 29+00

LEGEND:

- HIGH MARSH TRANSITION PLANTING ZONE
- HIGH MARSH PLANTING ZONE
- EROSION CONTROL SEED MIX
- ROCK SLOPE PROTECTION

SHEET NOTES:

1. SEE SHEET L-8 AND L-9 FOR PLANTING PALETTE AND DETAILS.
2. HIGH MARSH AND HIGH MARSH TRANSITION PLANT QUANTITIES ARE SHOWN PER SHEET (L-1 TO L-7).

KEY MAP
SCALE: NTS

N

REV	DESCRIPTION	DATE	APPR.
	DRAFT 100% AUGUST 2014		

ICF INTERNATIONAL

DATE JULY 2014
DESIGN K. LANTZ
DRAWN L. HOANG
CHECKED K. MACKAY

LANDSCAPE ARCHITECT
LANDSCAPE ARCHITECT STAMP
PROJECT ENGINEER DATE

SAN FRANCISQUITO CREEK JOINT POWERS AUTHORITY
ACCEPTED BY DISTRICT
PROJECT ENGINEER DATE

PROJECT NAME AND SHEET DESCRIPTION:
SAN FRANCISQUITO CREEK FLOOD REDUCTION, ECOSYSTEM RESTORATION, & RECREATION PROJECT
IRRIGATION PLAN
R-LINE STATION 19+00 TO 29+00

SCALE 1" = 40'
VERIFY SCALES 0 1"
BAR IS ONE INCH ON ORIGINAL DRAWING IF NOT ONE INCH ON THIS SHEET, ADJUST SCALES ACCORDINGLY

PROJECT NUMBER 26284002
SHEET CODE: L-21
SHEET NUMBER: 114 OF 119

DOCUMENT NUMBER: SFC_LP-C-1028-XXXXXXX

USERNAME: BillShad Tue 08 Jul 2008 09:32am
FILENAME: C:\pwworking\sac\d0171341\L-17_L-26

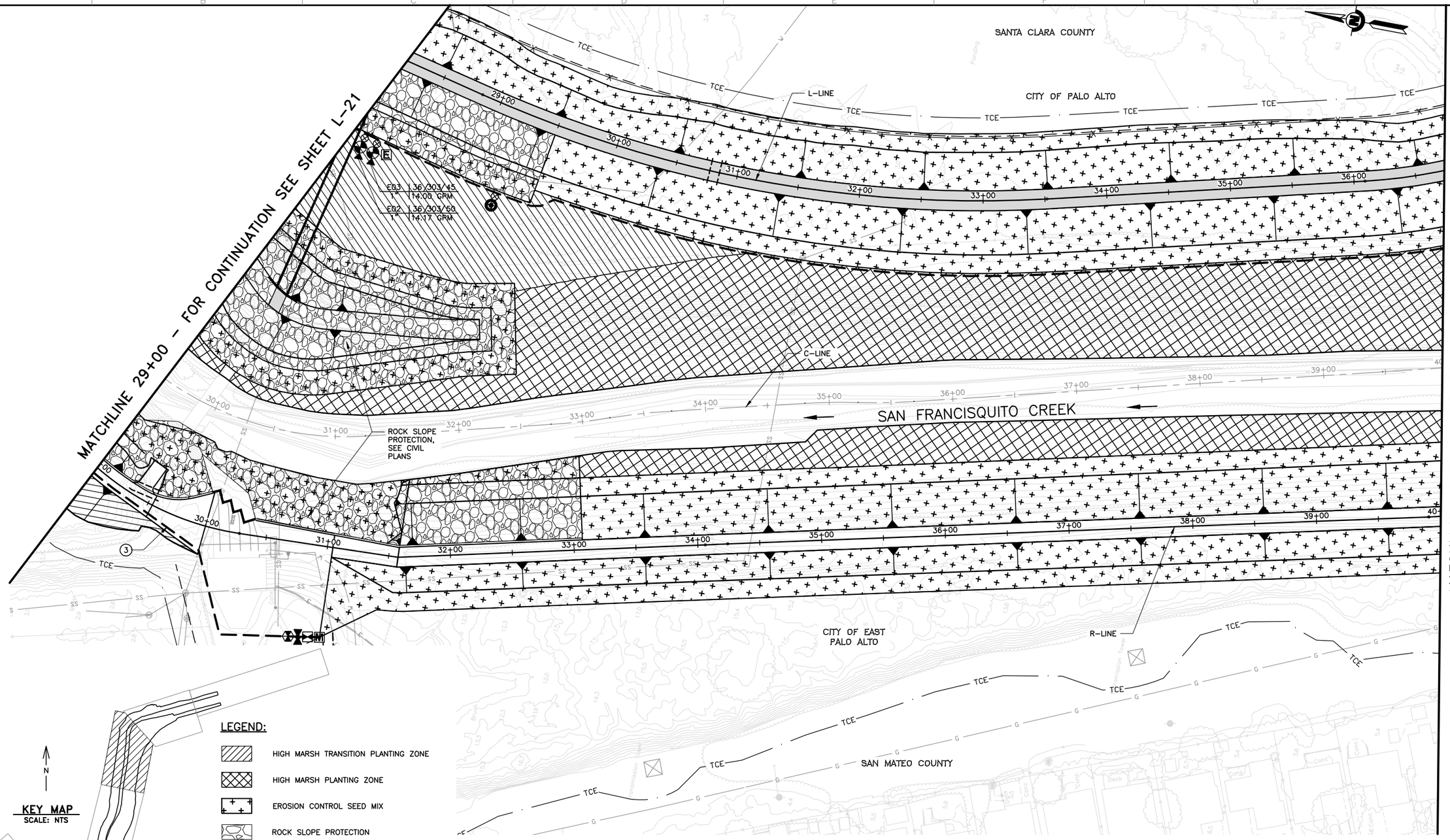

LEGEND:

- HIGH MARSH TRANSITION PLANTING ZONE
- HIGH MARSH PLANTING ZONE
- EROSION CONTROL SEED MIX
- ROCK SLOPE PROTECTION

SHEET NOTES:

1. SEE SHEET L-8 AND L-9 FOR PLANTING PALETTE AND DETAILS.
2. HIGH MARSH AND HIGH MARSH TRANSITION PLANT QUANTITIES ARE SHOWN PER SHEET (L-1 TO L-7).
3. PIPE AT LEVEE SHALL BE INSTALLED ON-GRADE. ANCHOR WITH 36" REBAR J-HOOK AT 6' O.C. SPACING.

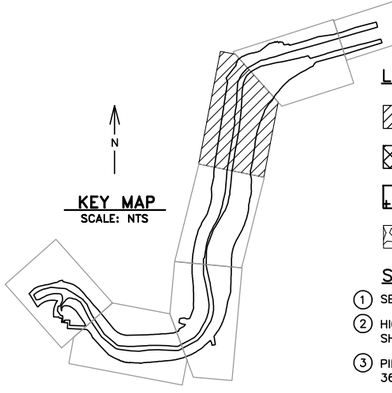

KEY MAP
SCALE: NTS

USERNAME: BillShad Tue 08 Jul 2008 09:32am
FILENAME: C:\pwworking\sac\d0171341\L-17_L-26

DOCUMENT NUMBER: SFC_LP-C-1028-XXXXXXX

REV	DESCRIPTION	DATE	APPR.
	DRAFT 100% AUGUST 2014		

ICF INTERNATIONAL

DATE	LANDSCAPE ARCHITECT
JULY 2014	LANDSCAPE ARCHITECT STAMP
DESIGN K. LANTZ	
DRAWN L. HOANG	
CHECKED K. MACKAY	PROJECT ENGINEER DATE

SAN FRANCISQUITO CREEK JOINT POWERS AUTHORITY

ACCEPTED BY DISTRICT

PROJECT ENGINEER DATE

PROJECT NAME AND SHEET DESCRIPTION:

SAN FRANCISQUITO CREEK FLOOD REDUCTION, ECOSYSTEM RESTORATION, & RECREATION PROJECT

IRRIGATION PLAN
R-LINE STATION 29+00 TO 40+00

SCALE: 1" = 40'

VERIFY SCALES: 0 — 1"
BAR IS ONE INCH ON ORIGINAL DRAWING IF NOT ONE INCH ON THIS SHEET, ADJUST SCALES ACCORDINGLY

PROJECT NUMBER: 26284002

SHEET CODE: L-22

SHEET NUMBER: 115 OF 119

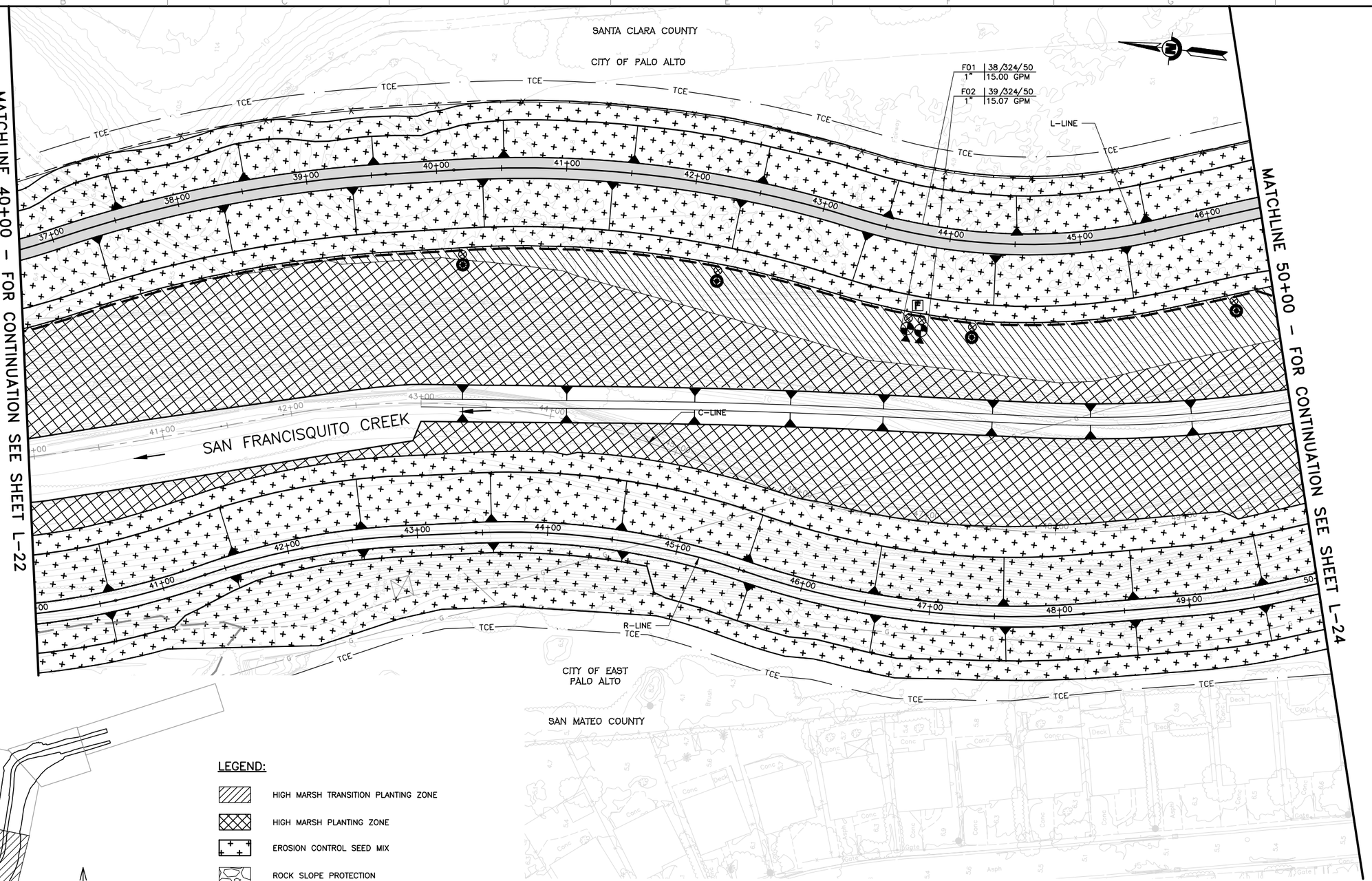

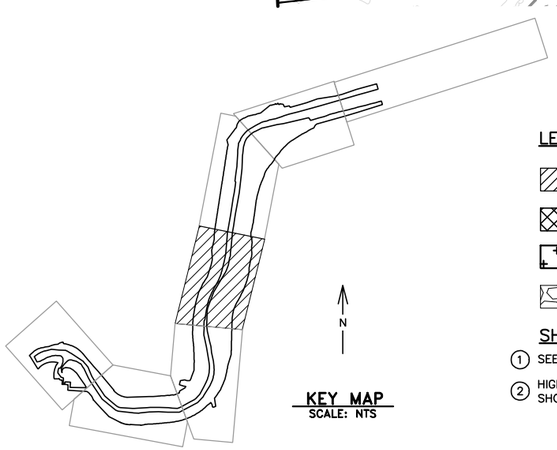

KEY MAP
SCALE: NTS

LEGEND:

- HIGH MARSH TRANSITION PLANTING ZONE
- HIGH MARSH PLANTING ZONE
- EROSION CONTROL SEED MIX
- ROCK SLOPE PROTECTION

SHEET NOTES:

1. SEE SHEET L-8 AND L-9 FOR PLANTING PALETTE AND DETAILS.
2. HIGH MARSH AND HIGH MARSH TRANSITION PLANT QUANTITIES ARE SHOWN PER SHEET (L-1 TO L-7).

REV	DESCRIPTION	DATE	APPR.
	DRAFT 100% AUGUST 2014		

ICF INTERNATIONAL

DATE	JULY 2014
DESIGN	K. LANTZ
DRAWN	L. HOANG
CHECKED	K. MACKAY

LANDSCAPE ARCHITECT
LANDSCAPE ARCHITECT STAMP
PROJECT ENGINEER DATE

SAN FRANCISQUITO CREEK JOINT POWERS AUTHORITY
ACCEPTED BY DISTRICT
PROJECT ENGINEER DATE

PROJECT NAME AND SHEET DESCRIPTION:
SAN FRANCISQUITO CREEK FLOOD REDUCTION, ECOSYSTEM RESTORATION, & RECREATION PROJECT
IRRIGATION PLAN
R-LINE STATION 40+00 TO 50+00

SCALE: 1" = 40'
VERIFY SCALES: 0 1"
BAR IS ONE INCH ON ORIGINAL DRAWING IF NOT ONE INCH ON THIS SHEET, ADJUST SCALES ACCORDINGLY

PROJECT NUMBER: 26284002
SHEET CODE: L-23
SHEET NUMBER: 116 OF 119

DOCUMENT NUMBER: SFC_LP-C-1028-XXXXXXX

USERNAME: BillShad Tue 08 Jul 2008 09:32am
FILENAME: C:\pwworking\sac\d0171341\L-17_L-26

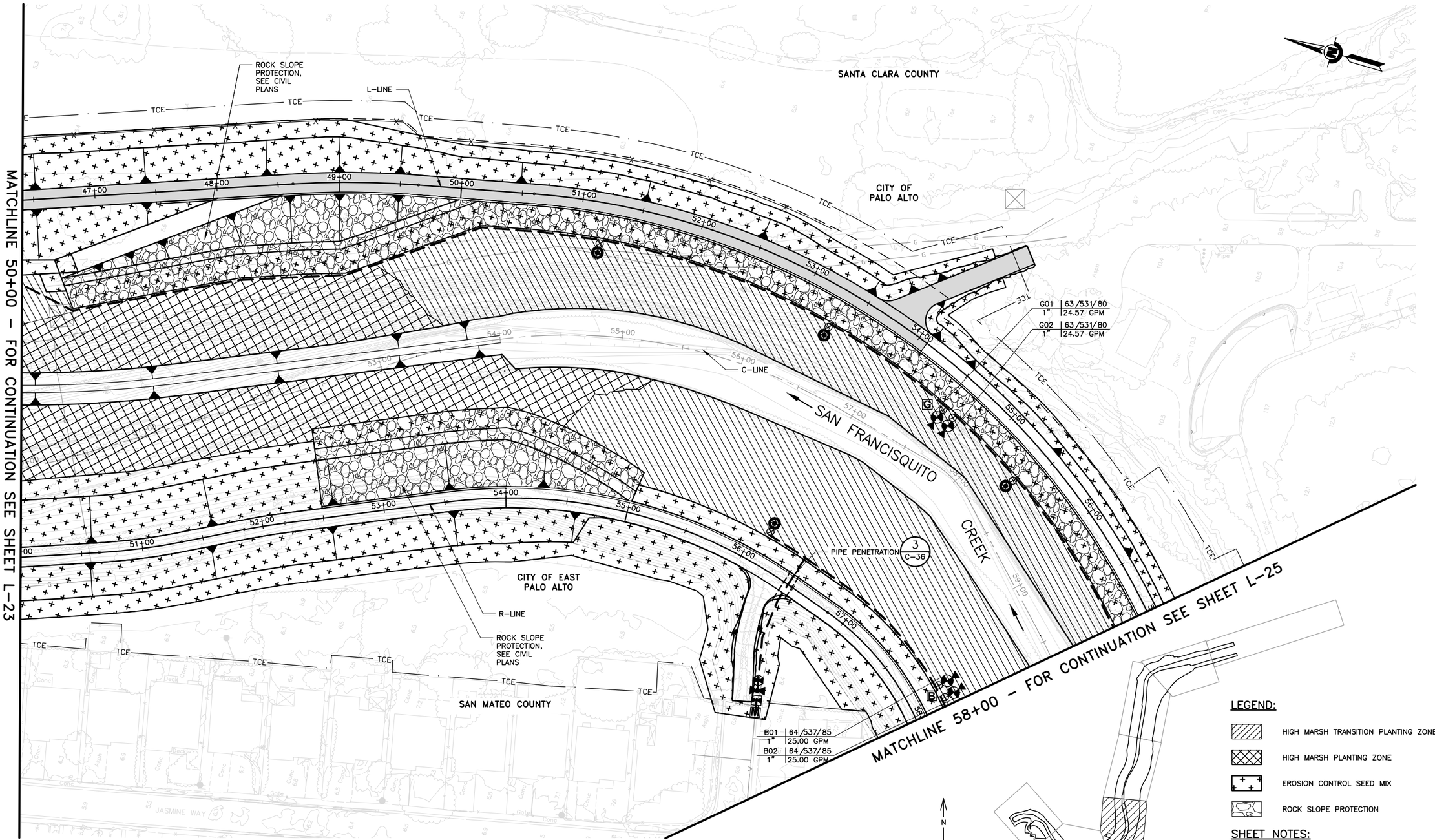

KEY MAP
SCALE: NTS

LEGEND:

- HIGH MARSH TRANSITION PLANTING ZONE
- HIGH MARSH PLANTING ZONE
- EROSION CONTROL SEED MIX
- ROCK SLOPE PROTECTION

SHEET NOTES:

1. SEE SHEET L-8 AND L-9 FOR PLANTING PALETTE AND DETAILS.
2. HIGH MARSH AND HIGH MARSH TRANSITION PLANT QUANTITIES ARE SHOWN PER SHEET (L-1 TO L-7).

REV	DESCRIPTION	DATE	APPR.
	DRAFT 100% AUGUST 2014		

ICF INTERNATIONAL

DATE	JULY 2014
DESIGN	K. LANTZ
DRAWN	L. HOANG
CHECKED	K. MACKAY

LANDSCAPE ARCHITECT
LANDSCAPE ARCHITECT STAMP
PROJECT ENGINEER DATE

SAN FRANCISQUITO CREEK JOINT POWERS AUTHORITY
ACCEPTED BY DISTRICT
PROJECT ENGINEER DATE

PROJECT NAME AND SHEET DESCRIPTION:
SAN FRANCISQUITO CREEK FLOOD REDUCTION, ECOSYSTEM RESTORATION, & RECREATION PROJECT
IRRIGATION PLAN
R-LINE STATION 50+00 TO 58+00

SCALE: 1" = 40'
VERIFY SCALES: 0 1"
BAR IS ONE INCH ON ORIGINAL DRAWING IF NOT ONE INCH ON THIS SHEET, ADJUST SCALES ACCORDINGLY

PROJECT NUMBER: 26284002
SHEET CODE: L-24
SHEET NUMBER: 117 OF 119

DOCUMENT NUMBER: SFC_LP-C-1028-XXXXXXX

USERNAME: BillShad Tue 08 Jul 2008 09:32am
FILENAME: C:\pwworking\sac\d0171341\L-17_L-26

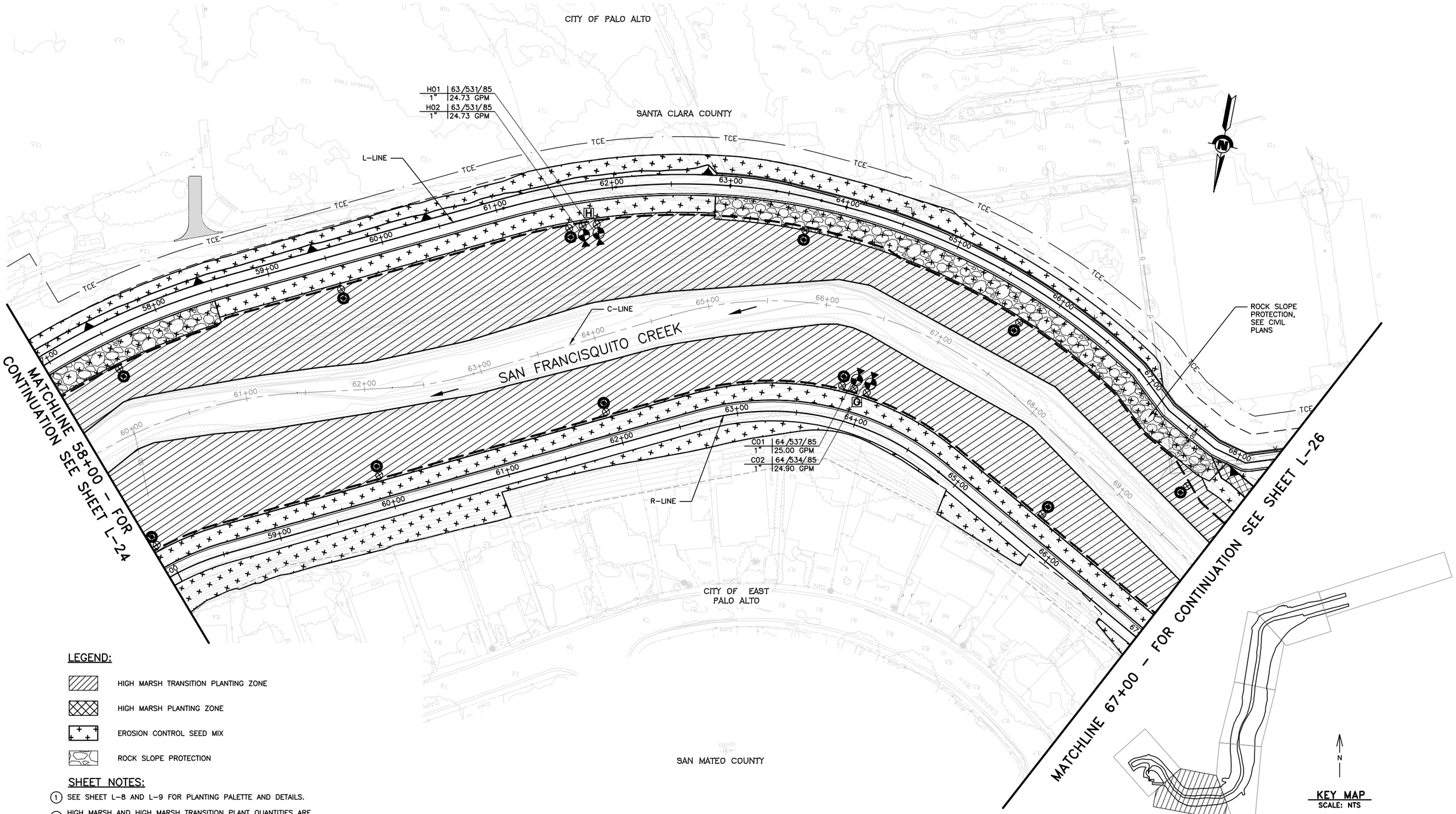

LEGEND:

- HIGH MARSH TRANSITION PLANTING ZONE
- HIGH MARSH PLANTING ZONE
- EROSION CONTROL SEED MIX
- ROCK SLOPE PROTECTION

SHEET NOTES:

1. SEE SHEET L-8 AND L-9 FOR PLANTING PALETTE AND DETAILS.
2. HIGH MARSH AND HIGH MARSH TRANSITION PLANT QUANTITIES ARE SHOWN PER SHEET (L-1 TO L-7).

REV	DESCRIPTION	DATE	APPR.
	DRAFT 100% AUGUST 2014		

ICF INTERNATIONAL

DATE	JULY 2014
DESIGN	K. LANTZ
DRAWN	L. HOANG
CHECKED	K. MACKAY

LANDSCAPE ARCHITECT

LANDSCAPE ARCHITECT STAMP

PROJECT ENGINEER DATE

SAN FRANCISQUITO CREEK JOINT POWERS AUTHORITY

ACCEPTED BY DISTRICT

PROJECT ENGINEER DATE

PROJECT NAME AND SHEET DESCRIPTION:

SAN FRANCISQUITO CREEK FLOOD REDUCTION, ECOSYSTEM RESTORATION, & RECREATION PROJECT

IRRIGATION PLAN
R-LINE STATION 58+00 TO 67+00

SCALE: 1" = 40'

VERIFY SCALES: 0 — 1"
BAR IS ONE INCH ON ORIGINAL DRAWING IF NOT ONE INCH ON THIS SHEET, ADJUST SCALES ACCORDINGLY

PROJECT NUMBER: 26284002

SHEET CODE: L-25

SHEET NUMBER: 118 OF 119

USERNAME: BillShad Tue 08 Jul 2008 09:32am
FILENAME: C:\pwworking\sac\d0171341\L-17_L-26
DOCUMENT NUMBER:SFC_LP-C-1028-XXXXXXX

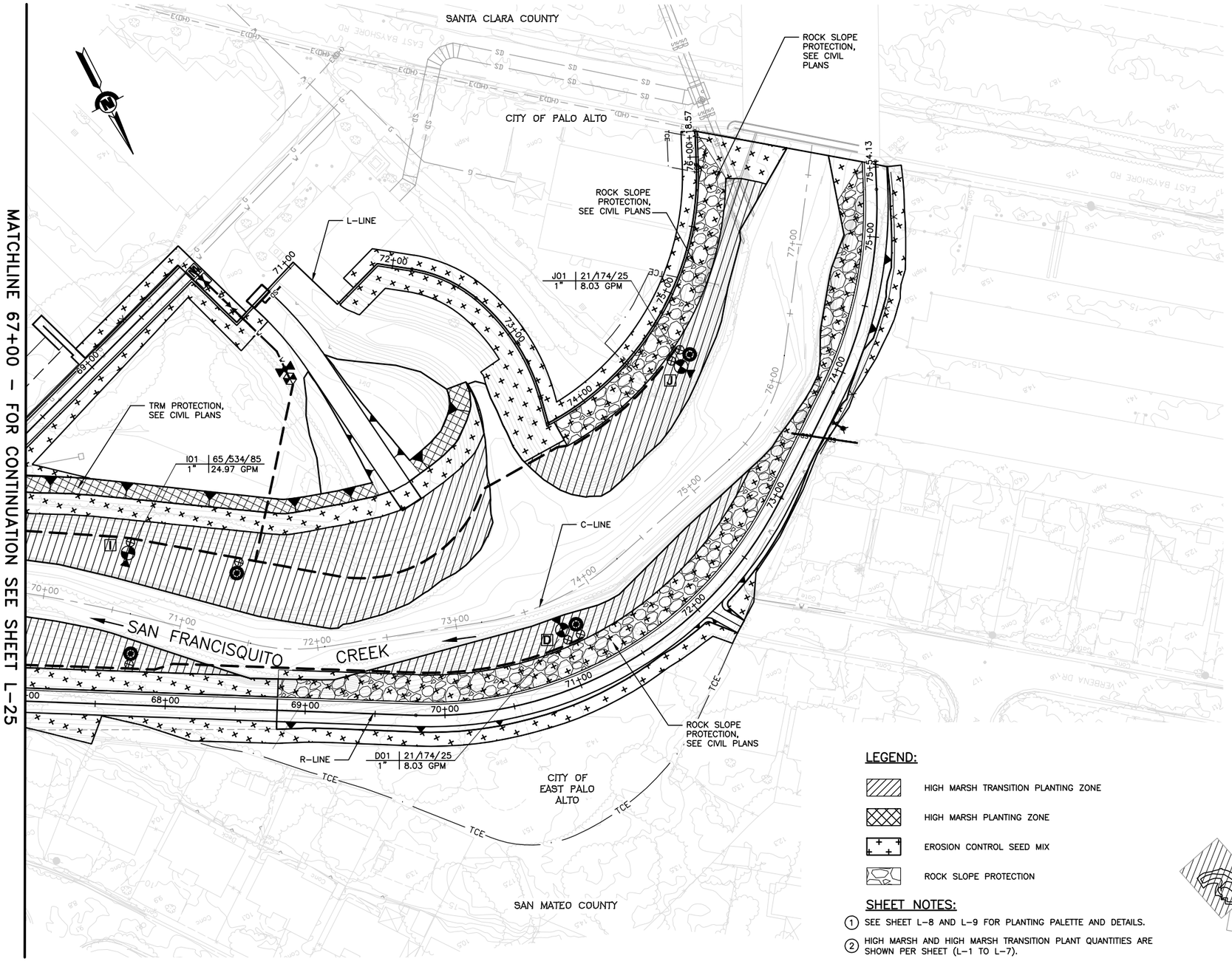

LEGEND:

- HIGH MARSH TRANSITION PLANTING ZONE
- HIGH MARSH PLANTING ZONE
- EROSION CONTROL SEED MIX
- ROCK SLOPE PROTECTION

SHEET NOTES:

1. SEE SHEET L-8 AND L-9 FOR PLANTING PALETTE AND DETAILS.
2. HIGH MARSH AND HIGH MARSH TRANSITION PLANT QUANTITIES ARE SHOWN PER SHEET (L-1 TO L-7).

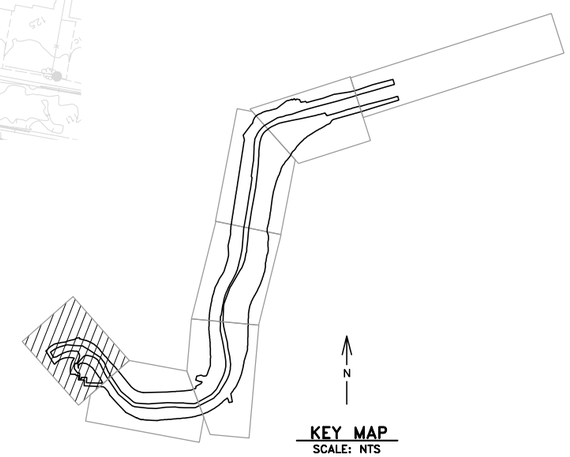

KEY MAP
SCALE: NTS

USERNAME: BillShad Tue 08 Jul 2008 09:32am
FILENAME: C:\pwworking\sac\d0171341\L-17_L-26

DOCUMENT NUMBER: SFC_LP-C-1028-XXXXXXX

REV	DESCRIPTION	DATE	APPR.
	DRAFT 100% AUGUST 2014		

ICF INTERNATIONAL

DATE	
JULY 2014	
DESIGN	K. LANTZ
DRAWN	L. HOANG
CHECKED	K. MACKAY

LANDSCAPE ARCHITECT
LANDSCAPE ARCHITECT STAMP
PROJECT ENGINEER DATE

SAN FRANCISQUITO CREEK JOINT POWERS AUTHORITY
ACCEPTED BY DISTRICT
PROJECT ENGINEER DATE

PROJECT NAME AND SHEET DESCRIPTION:
SAN FRANCISQUITO CREEK FLOOD REDUCTION, ECOSYSTEM RESTORATION, & RECREATION PROJECT
IRRIGATION PLAN
R-LINE STATION 67+00 TO 76+00

SCALE: 1" = 40'
VERIFY SCALES: 0 1"
BAR IS ONE INCH ON ORIGINAL DRAWING IF NOT ONE INCH ON THIS SHEET, ADJUST SCALES ACCORDINGLY

PROJECT NUMBER: 26284002
SHEET CODE: L-26
SHEET NUMBER: 119 OF 119