CALIFORNIA REGIONAL WATER QUALITY CONTROL BOARD

SANTA ANA REGION

3737 Main Street, Suite 500, Riverside, California 92501-3348
Phone (951) 782-4130 - FAX (951) 781-6288– TDD (951) 782-3221

http://www.waterboards.ca.gov/santaana

ORDER NO. R8-2013-0014

WASTE DISCHARGE REQUIREMENTS AND MASTER RECLAMATION PERMIT FOR THE CITY OF ANAHEIM WATER RECYCLING DEMONSTRATION PROJECT ORANGE COUNTY

The following Discharger is subject to waste discharge and producer/user reclamation requirements as set forth in this Order:

Table 1. Discharger Information

Discharger/Operator	City of Anaheim
Name of Facility	Water Recycling Demonstration Project
Facility Address	210 S. Anaheim Boulevard, Anaheim, CA 92805
	Orange County

The discharge by the City of Anaheim from the discharge point identified below is subject to waste discharge requirements as set forth in this Order:

Table 2. Discharge Locations and Recycled Water Use Areas

Discharge Point	Effluent Description	Discharge Point (Latitude)	Discharge Point (Longitude)	Receiving Water
DP-001 Recycled water	Up to 0.05 mgd of tertiary treated and disinfected	33°50'06"N	117°54'55"W	Orange Groundwater Management Zone

Table 3. Administrative Information

This Order was adopted by the Regional Water Board on:	June 7, 2013
This Order shall become effective on:	June 7, 2013

IT IS HEREBY ORDERED, that in order to meet the provisions contained in Division 7 of the California Water Code and regulations adopted thereunder, the City of Anaheim shall comply with the requirements set forth in this Order.

I, Kurt V. Berchtold, Executive Officer, do hereby certify that this Order with all attachments is a full, true, and correct copy of an Order adopted by the California Regional Water Quality Control Board, Santa Ana Region, on June 7, 2013.

Kurt V. Berchtold

Kurt V. Berchtold, Executive Officer

TABLE OF CONTENTS

I. Discharger/Facility Information 5
II. Findings 5
III. Discharge Prohibitions 6
IV. Discharge and Reclamation Specifications 7
  A. Reclamation Specifications - Discharge Point 001 (DP 001) 7
V. Receiving Water Limitations and specifications 11
  A. Surface Water Limitations 11
  B. Groundwater Limitations 11
VI. Provisions 11
  A. Standard Provisions 11
  B. Monitoring and Reporting Program Requirements (MRP) 13
  C. Special Provisions 13
    1. Special Studies, Technical Reports and Additional Monitoring Requirements ... 13
    2. Best Management Practices and Pollution Prevention 14
    3. Construction, Operation and Maintenance Specifications 14
    4. Special Provisions for Municipal Facilities (POTWs Only) 15
VII. Compliance Determination 16
  A. General 16
  B. Average Monthly Effluent Limitation (AMEL) 16
  C. Average Weekly Effluent Limitation (AWEL) 17
  D. Maximum Daily Effluent Limitation (MDEL) 17
  E. 12-Month Running Average Effluent Limitation (12-MRAEL) 17
  F. Multiple Sample Data 17
  G. Turbidity Limitations 18
  H. Compliance Determination 18

LIST OF TABLES

Table 1. Discharger/Facility Information 1
Table 2. Discharge Locations and Recycled Water Use Areas 1
Table 3. Administrative Information 2
Table 4. Facility Information 5
Table 5 Recycled Water Limitations at REC 001 7

LIST OF ATTACHMENTS

Attachment A – Definitions A-1
Attachment B – Location Map B-1
Attachment C – Flow Schematic C-1
Attachment D – Not Used
Attachment E – Monitoring and Reporting Program (MRP) E-1
Attachment F – Fact Sheet F-1

I. DISCHARGER/FACILITY INFORMATION

The following Discharger is subject to waste discharge and producer/user reclamation requirements as set forth in this Order:

Table 4. Discharger/Facility Information

Discharger	City of Anaheim
Address	201 S. Anaheim Boulevard, Suite 601, Anaheim, CA 92805
Facility	Water Recycling Demonstration Project
Facility Address	**1.** 210 S. Anaheim Boulevard, Anaheim
Facility Contact	**2.** Richard Wilson, (714) 765-4277
Type of Facility	POTW
Facility Design Flow - tertiary treatment	0.05 mgd tertiary treated and disinfected

II. FINDINGS

The California Regional Water Quality Control Board, Santa Ana Region (hereinafter Regional Water Board), finds:

A. Background. On August 25, 2009, the City of Anaheim (hereinafter Discharger or City) submitted a Report of Waste Discharge for the proposed operation of the Water Recycling Demonstration Project, which includes the production of tertiary treated wastewater and its subsequent reclamation through a recycled water distribution system for various uses including landscape irrigation. The construction of the wastewater treatment plant and first phase of the recycled water distribution system have been completed and are undergoing startup testing procedures. The Discharger expects to begin distribution of up to 0.05 mgd of tertiary treated and disinfected recycled water during June 2013. The recycled water use areas overlie the Orange Groundwater Management Zone.

B. Facility Description. The wastewater treatment processes include influent screening as preliminary treatment, secondary treatment that consists of an activated sludge process designed for nutrient removal (nitrification/denitrification), tertiary treatment that uses ultrafiltration membranes, disinfection with ozone, and ultraviolet (UV) radiation for removal of UV sensitive organic pollutants. Although the UV radiation system will likely provide further effluent disinfection capabilities, the Discharger does not claim disinfection credits from the use of this technology. The Discharger proposes to produce up to 0.05 mgd of tertiary treated, disinfected wastewater for use as recycled water . Attachment B is a vicinity map for this facility. Attachment C is a flow schematic of the treatment system.

C. **Legal Authorities.** This Order serves as Waste Discharge Requirements (WDRs) pursuant to Article 4, Chapter 4, Division 7 of the California Water Code (commencing with section 13260). Also, this Order serves as a master reclamation permit pursuant to Section 13523.1 of Article 4, Chapter 7, Division 7 of the California Water Code.

D. **Background and Rationale for Requirements.** The requirements in this Order are based on information submitted as part of the application and other available information. Attachment F, which contains background information and rationale for requirements in this Order, is hereby incorporated into this Order, and thus constitutes as part of the Findings for this Order. Attachments A, B, C, and E are also incorporated into this Order.

E. **Statewide General Waste Discharge Requirements for Sanitary Sewer Systems.** The State Water Resources Control Board issued the Statewide General Waste Discharge Requirements for Sanitary Sewer Systems, Order No. 2006-0003-DWQ (General Order) on May 2, 2006, as amended by Order No. WQ 2008-0002-EXEC, requiring public agencies that own sanitary sewer systems comprised of more than one mile of pipes or sewer lines to enroll for coverage under the General Order. The General Order requires agencies to develop sanitary sewer management plans (SSMPs) and report all sanitary sewer overflows (SSOs). The Discharger is currently enrolled under the General Order.

F. **Monitoring and Reporting.** Water Code section 13267 authorizes the Regional Board to require technical and monitoring reports. The Monitoring and Reporting Program establishes monitoring and reporting requirements to implement federal and State requirements. This Monitoring and Reporting Program is provided in Attachment E of this Order.

G. **Notification of Interested Parties.** The Regional Water Board has notified the Discharger and interested agencies and persons of its intent to prescribe Waste Discharge Requirements and a Master Reclamation Permit for this project and has provided them with an opportunity to submit their written comments and recommendations. Details of the notification are provided in the Fact Sheet (Attachment F) of this Order.

H. **Consideration of Public Comment.** The Regional Water Board, in a public meeting, heard and considered all comments pertaining to the discharge. Details of the public meeting are provided in the Fact Sheet (Attachment F) of this Order.

III. PROHIBITIONS

A. The use of recycled water shall be limited to treated effluent that meets the conditions and requirements specified in Section IV.A.

B. The unauthorized discharge of wastewater/use of recycled water at a location or in a manner different from those described in this Order is prohibited.

C. The bypass or overflow of untreated wastewater or wastes to surface waters or surface water drainage courses is prohibited.

D. The discharge of any substances in concentrations toxic to animal or plant life in the affected receiving water is prohibited.

E. The discharge of any radiological, chemical, or biological warfare agent or high level radiological waste is prohibited.

F. The distribution and use of recycled water prior to final authorization by the California Department of Public Health and the Executive Officer is prohibited.

IV. RECLAMATION SPECIFICATIONS

A. Reclamation Specifications - Discharge Point 001 (DP 001)

The Discharger shall maintain compliance with the following limitations for recycled water produced and distributed for landscape irrigation or other similar uses. Compliance is to be measured at monitoring location REC-001 or other approved monitoring locations where representative samples of recycled water can be obtained for laboratory testing and analysis, as described in the attached Monitoring and Reporting Program (Attachment E). The Discharger may submit for approval by the Executive Officer other monitoring location(s) not specified herein where representative samples of recycled water could be obtained for laboratory testing and analysis.

1. **Physical/Biological Limitations.** The Discharger shall maintain compliance with the following recycled water limitations at REC 001:

Table 5. Recycled Water Limitations at REC 001

Parameter	Units	Limitations	
		Average Monthly	Average Weekly
Biochemical Oxygen Demand 5-day @ 20°C	mg/L	20	30
Total Suspended Solids	mg/L	20	30

2. **TDS Limitations.** The 12-month flow weighted running average total dissolved solids concentration of the discharge at Discharge Point 001 shall not exceed the 580 mg/l unless:

(1) The Discharger demonstrates to the satisfaction of the Regional Water Board's Executive Officer that:

(a) Discharges in excess of the TDS limits are due to the quality of water supply sources utilized in the Discharger's service area, and that all reasonable steps, as agreed upon by the Executive Officer, have been taken to ensure that the best quality supplies are obtained and utilized in the Discharger's service area; and/or

(b) Discharges in excess of the TDS limits are due to chemical additions in the treatment process needed to meet waste discharge requirements, and the Discharger has taken all steps to optimize chemical additions so as to minimize the increases; and

(2) The Discharger implements an acceptable plan to offset discharges in excess of the TDS limits.

3. **Recycled Water Specifications.** The recycled water shall all times be disinfected tertiary treated recycled water, which is a filtered and subsequently disinfected wastewater that meets the following limitations:

(1) Turbidity of the filter effluent

When filtration[1] is through a microfiltration, ultrafiltration, nanofiltration, or reverse osmosis membrane, the turbidity of the filtered wastewater shall not exceed any of the following:

(a) 0.2 Nephelometric Turbidity Units (NTU) more than 5 percent of the time within any calendar day; and

(b) 0.5 NTU at any time.

(2) Disinfected wastewater shall meet the following:

(a) The median concentration of total coliform bacteria in the disinfected effluent shall not exceed a Most Probable Number (MPN) of 2.2 per 100 milliliters (ml) utilizing the bacteriological results of the last seven days for which analysis has been completed.

(b) The number of total coliform organism shall not exceed an MPN of 23 total coliform bacteria per 100 ml in more than one sample in any calendar month.

(c) No total coliform sample shall exceed an MPN of 240 total coliform bacteria per 100 ml.

---

1 *For recycled water use, other acceptable filtration technology that complies with Title 22 of the California Code of Regulations and approved by the California Department of Public Health (CDPH) may be used. Compliance determination will be based on CDPH guidance.*

(d) When a disinfection process combined with the filtration process is utilized, the combined process shall demonstrate inactivation and/or removal of 99.999 percent of the plaque-forming units of F-specific bacteriophage MS2, or polio virus in the wastewater. A virus that is at least as resistant to disinfection as polio virus may be used for purposes of the demonstration.

(e) When ozone disinfection process is utilized following filtration, at a minimum a CT of 1.0 milligram-minute per liter at all times shall be provided. The Discharger shall determine the necessary ozone dose to overcome ozone demand and maintain an adequate residual and contact time to meet the minimum CT. The CT (the product of ozone residual and modal contact time[2] measured at the same point) shall be calculated continuously by the control system and continuous online monitoring of flow and ozone residual shall be conducted by the Discharger. In addition, a correlation between the online ozone residual monitoring to an approved grab (bench top) sample test method results shall be established. The discharger shall incorporate and effectively maintain adequate and sufficient reliability features to ensure that the minimum CT is met. The facility must be operated and maintained in accordance with a CDPH approved operations plan, which is part of the Title 22 Engineering Report. The operations plan included in the Title 22 Engineering Report shall become an enforceable part of this Order.

4. The pH of the recycled water shall at all times be within the range of 6.0 to 9.0 pH units.

5. The Discharger shall prepare an Engineering Report, conforming to Section 60323, Article 7, Chapter 3, Division 4, Title 22 of the California Code of Regulations, and at a programmatic level consistent with the planned distribution and uses of recycled water represented in this Order. The Programmatic Engineering Report shall be submitted to the California Department of Public Health and the Regional Water Board and shall be approved by the Regional Water Board's Executive Officer prior to delivery of recycled water to any user.

6. Prior to the delivery of recycled water to any schools, hospitals, or other unique use sites , the Discharger shall submit to the California Department of Public Health and the County Environmental Health Department for review and approval a report containing the information listed in paragraph IV.A.11., below.

7. The Discharger shall be responsible for assuring that recycled water is delivered and utilized in conformance with this Order and the recycling criteria contained in Title 22, Division 4, Chapter 3, Sections 60301 through 60355, California Code of Regulations.

---

2 *Modal contact time shall be calculated daily based on the minimum one-hour average value in a 24-hour period.*

The Discharger shall conduct periodic inspections of the facilities of the recycled water users to monitor compliance by the users with this Order.

8. The Discharger shall establish and enforce Rules and Regulations for Recycled Water users, governing the design and construction of recycled water use facilities and the use of recycled water in accordance with the uniform statewide recycling criteria established pursuant to California Water Code Section 13521.

    a. Use of recycled water by the Discharger shall be consistent with its Rules and Regulations for Recycled Water Use.

    b. Any revisions made to the Rules and Regulations shall be subject to the review of the Regional Water Board, the California Department of Public Health, and the County Environmental Health Department. The revised Rules and Regulations or a letter certifying that the Discharger's Rules and Regulations contain the updated provisions in this Order, shall be submitted to the Regional Water Board within 60 days of adoption of this Order by the Regional Water Board.

9. The Discharger shall conduct periodic inspections of recycled water reuse sites to monitor compliance with the Discharger's Rules and Regulations for Recycled Water Use and the uniform statewide reclamation criteria established pursuant to California Water Code Section 13521.

10. The storage, delivery, or use of recycled water shall not individually or collectively, directly or indirectly, result in a pollution or nuisance, or adversely affect water quality, as defined in the California Water Code.

11. The Discharger shall maintain and make available upon request by the Regional Water Board the following information for any recycled water users:

    a. The average number of persons estimated to be served at each use area on a daily basis.
    b. The specific boundaries of the proposed use area including a map showing the location of each facility, drinking water fountain, and impoundment to be used.
    c. The person or persons responsible for operation of the recycled water system at each use area.
    d. The specific use to be made of the recycled water at each use area.
    e. The methods to be used to assure that the installation and operation of the recycled water system will not result in cross connections between the recycled water and potable water piping systems. This shall include a description of the pressure, dye or other test methods to be used to test the system.
    f. Plans and specifications which include following:

        (1) Proposed piping system to be used.

(2) Pipe locations of both the recycled and potable water systems.

(3) Type and location of the outlets and plumbing fixtures that will be accessible to the public.

(4) The methods and devices to be used to prevent backflow of recycled water into the potable water system.

(5) Plan notes relating to specific installation and use requirements.

12. The Discharger shall require each user to designate an on-site supervisor responsible for the operation of the recycled water distribution system within the use area. The supervisor shall be responsible for complying with this Order, prevention of potential hazards, the installation, operation and maintenance of the distribution system as approved by CDPH.

V. RECEIVING WATER LIMITATIONS AND SPECIFICATIONS

A. Surface Water Limitations

The discharge of waste or use of recycled water shall not cause any surface waters to be degraded, cause water quality objectives to be exceeded, unreasonably affect beneficial uses, or cause a condition of pollution or nuisance.

B. Groundwater Limitations

The discharge of waste or use of recycled water shall not cause the underlying groundwater to be degraded, cause water quality objectives to be exceeded, unreasonably affect beneficial uses, or cause a condition of pollution or nuisance.

VI. PROVISIONS

A. General Provisions

1. Failure to comply with provisions or requirements of this Order, or violation of other applicable laws or regulations governing discharges from this facility, may subject the Discharger to administrative or civil liabilities, criminal penalties, and/or other enforcement remedies to ensure compliance. Additionally, certain violations may subject the Discharger to civil or criminal enforcement from appropriate local, state, or federal law enforcement entities.

2. In the event the Discharger does not comply or will be unable to comply for any reason with any prohibition, discharge limitation, or receiving water limitation of this Order, which pose an immediate threat to human health or the environment, the Discharger shall notify the Regional Water Board by telephone at (951) 782-4130 or by email to **info8@waterboards.ca.gov** within 24 hours of having knowledge of such

noncompliance, and shall confirm this notification in the monthly Self-Monitoring Report, unless the Regional Water Board waives confirmation or requires, orally or in writing, a written notification within five business days. The written notification shall state the nature, time, duration, and cause of noncompliance, and shall describe the measures being taken to remedy the current noncompliance and, prevent recurrence including, where applicable, a schedule of implementation. Other noncompliance requires written notification with the details discussed above with the next monitoring report.

3. Neither the treatment nor the discharge of pollutants shall create a pollution, contamination, or nuisance as defined by Section 13050 of the CWC.

4. The Discharger shall take all reasonable steps to minimize or correct any adverse impact on the environment resulting from noncompliance with this Order, including such accelerated or additional monitoring as may be necessary to determine the nature and impact of the noncomplying discharge.

5. This Order may be modified, revoked and reissued, or terminated for cause including, but not limited to, the following.

    a. Violation of any terms or conditions of this Order;
    b. Obtaining this Order by misrepresentation or failure to disclose fully all relevant facts.

6. The Discharger shall file with the Regional Water Board a Report of Waste Discharge at least 140 days before making any material change in the character, location, or volume of the discharge. A material change includes, but is not limited to, the following:

    a. Adding a major industrial waste discharge to a discharge of essentially domestic sewage, or adding a new process or product by an industrial facility resulting in a change in the character of the waste.
    b. Significantly changing the disposal method or location, such as changing the disposal to another drainage area or water body.
    c. Significantly changing the method of treatment.
    d. Increasing the treatment plant design capacity beyond that specified in this Order.

7. The provisions of this Order are severable, and if any provision of this Order, or the application of any provision of this Order to any circumstance, is held invalid, the application of such provision to other circumstances, and the remainder of this Order, shall not be affected thereby.

8. The Discharger shall maintain a copy of this Order at the site so that it is available to site operating personnel at all times. Key operating personnel shall be familiar with its content.

9. The Discharger shall optimize chemical additions needed in the treatment process to meet waste discharge requirements so as to minimize total dissolved solid increases in the treated wastewater.

10. Collected screenings, sludge, and other solids removed from liquid wastes shall be disposed of in a manner approved by the Regional Water Board's Executive Officer.

11. In the event of any change in control or ownership of land or waste discharge facility presently owned or controlled by the Discharger, the Discharger shall notify the succeeding owner or operator of the existence of this Order by letter, a copy of which shall be forwarded to the Regional Water Board.

12. The treatment facilities shall be designed, constructed, operated, and maintained to prevent inundation or washout due to floods with a 100-year return frequency.

13. The Regional Water Board and other authorized representatives shall be allowed:

    a. Entry upon premises where a regulated facility or activity is located or conducted, or where records are kept under the conditions of this Order;
    b. Access to copy any records that are kept under the conditions of the Order;
    c. To inspect any facility, equipment (including monitoring and control equipment), practices, or operations regulated or required under this Order; and
    d. To photograph, sample and monitor for the purpose of assuring compliance with this Order, or as otherwise authorized by the Water Code.

B. Monitoring and Reporting Program Requirements

The Discharger shall comply with the Monitoring and Reporting Program, and future revisions thereto, in Attachment E of this Order. This monitoring and reporting program may be modified by the Executive Officer at any time during the term of this Order, and may include a reduction or an increase in the number of parameters to be monitored, the frequency of the monitoring or the number and size of samples to be collected.

C. Special Provisions

1. Special Studies, Technical Reports and Additional Monitoring Requirements

a. By August 7, 2013, the Discharger shall submit for approval by the Executive Officer, a report that details the manner in which sampling, monitoring and reporting will be performed as required in the Order.

b. By August 7, 2013, the Discharger shall submit for approval by the Executive Officer, a final report that details the proposed TDS offset program and the manner by which TDS discharges and offsets will be monitored, computed, and reported.

2. Best Management Practices and Pollution Prevention

a. Pollutant Minimization Program

(1) The Discharger shall develop and conduct a Pollutant Minimization Program (PMP) as further described below when there is evidence (e.g., sample results reported as DNQ when the effluent limitation is less than the MDL, sample results from analytical methods more sensitive than those methods required by this Order, presence of whole effluent toxicity, health advisories for fish consumption, results of benthic or aquatic organism tissue sampling) that a priority pollutant is present in the effluent above an effluent limitation and either:

(a) A sample result is reported as DNQ and the effluent limitation is less than the RL; or
(b) A sample result is reported as ND and the effluent limitation is less than the MDL.

(2) The PMP shall include, but not be limited to, the following actions and submittals acceptable to the Regional Water Board:

(a) An annual review and semi-annual monitoring of potential sources of the reportable priority pollutant(s), which may include fish tissue monitoring and other bio-uptake sampling;
(b) Quarterly monitoring for the reportable priority pollutant(s) in the influent to the wastewater treatment system;
(c) Submittal of a control strategy designed to proceed toward the goal of maintaining concentrations of the reportable priority pollutant(s) in the effluent at or below the effluent limitation;
(d) Implementation of appropriate cost-effective control measures for the reportable priority pollutant(s), consistent with the control strategy; and
(e) An annual status report that shall be sent to the Regional Water Board including:

i. All PMP monitoring results for the previous year;
ii. A list of potential sources of the reportable priority pollutant(s);
iii. A summary of all actions undertaken pursuant to the control strategy; and
iv. A description of actions to be taken in the following year.

3. Construction, Operation and Maintenance Specifications

a. The Discharger's wastewater treatment plant shall be supervised and operated by persons possessing certificates of appropriate grade pursuant to Title 23, Division 3, Chapter 26, California Code of Regulations.

b. The Discharger shall provide safeguards to assure that should there be reduction, loss, or failure of electric power, the Discharger will comply with the requirements of this Order.

c. The Discharger shall update as necessary, the "Operation and Maintenance Manual (O&M Manual)," which it has developed for the treatment facility to conform to latest plant changes and requirements. The O&M Manual shall be readily available to operating personnel onsite. The O&M Manual shall include the following:

(1) Description of the treatment plant's organizational chart showing the number of employees, duties and qualifications and plant attendance schedules (daily, weekends and holidays, part-time, etc). The description should include documentation that the personnel are knowledgeable and qualified to operate the treatment facility so as to achieve the required level of treatment at all times.
(2) Detailed description of safe and effective operation and maintenance of treatment processes, process control instrumentation and equipment.
(3) Description of laboratory and quality assurance procedures.
(4) Process and equipment inspection and maintenance schedules.
(5) Description of safeguards to assure that, should there be reduction, loss, or failure of electric power, the Discharger will be able to comply with requirements of this Order.
(6) Description of preventive (fail-safe) and contingency (response and cleanup) plans for controlling accidental discharges, and for minimizing the effect of such events. These plans shall identify the possible sources of accidental discharges, untreated or partially treated waste bypass, and polluted drainage (such as loading and storage areas, power outage, waste treatment unit failure, process equipment failure, tank and piping failure).

4. Special Provisions for Municipal Facilities (POTWs Only)

a. Sewer Collection System Requirements: The Discharger's collection system is part of the system that is subject to this Order. As such, the Discharger must properly operate and maintain its collection system (40 C.F.R. § 122.41(e)). The Discharger must report any non-compliance (40 C.F.R. § 122.41(l)(6) and (7)) and mitigate any discharge from the Discharger's collection system in violation of this Order (40 C.F.R. § 122.41(d)).

Furthermore, the Statewide General Waste Discharge Requirements for Sanitary Sewer Systems, Order No. 2006-0003-DWQ (General Order), contains requirements for operation and maintenance of collection systems and for

reporting and mitigating sanitary sewer overflows. While the Discharger must comply with both the General Order and this Order, the General Order more clearly and specifically stipulates requirements for operation and maintenance and for reporting and mitigating sanitary sewer overflows. The Discharger and other governmental agencies that are discharging wastewater into the facility are required to obtain coverage under the General Order.

b. Sludge Disposal Requirements

(1) Collected screenings, sludge, and other solids removed from liquid wastes shall be disposed of in a manner that is consistent with State Water Board and CalRecycle's joint regulations (Title 27) of the California Code of Regulations and approved by the Regional Water Board's Executive Officer.
(2) The use and disposal of biosolids shall comply with existing Federal and State laws and regulations, including permitting requirements and technical standards included in 40 CFR 503.
(3) Any proposed change in biosolids use or disposal practice from a previously approved practice should be reported to the Executive Officer and EPA Regional Administrator at least 90 days in advance of the change.
(4) The Discharger shall take all reasonable steps to minimize or prevent any discharge or biosolids use or disposal that has the potential of adversely affecting human health or the environment.

c. Pretreatment Program Requirements (Not applicable)

VII. COMPLIANCE DETERMINATION

Compliance with the effluent limitations contained in Section IV of this Order will be determined as specified below:

A. General.
Compliance with effluent limitations for pollutants shall be determined using sample reporting protocols defined in the MRP and Attachment A of this Order. For purposes of reporting and administrative enforcement by the Regional and State Water Boards, the Discharger shall be deemed out of compliance with effluent limitations if the concentration of the pollutant in the monitoring sample is greater than the effluent limitation and greater than or equal to the minimum level (ML).

B. Average Monthly Effluent Limitation (AMEL).
If the average (or when applicable, the median determined by subsection F below for multiple sample data) of daily discharges over a calendar month exceeds the AMEL for a given parameter, this will represent a single violation, though the Discharger will be considered out of compliance for each day of that month for that parameter (e.g., resulting in 31 days of non-compliance in a 31-day month). If only a single sample is taken during the calendar month and the analytical result for that sample exceeds the

AMEL, the Discharger will be considered out of compliance for that calendar month. The Discharger will only be considered out of compliance for days when the discharge occurs. For any one calendar month during which no sample (daily discharge) is taken, no compliance determination can be made for that calendar month.

C. Average Weekly Effluent Limitation (AWEL).
If the average (or when applicable, the median for multiple sample data, see subsection F) of daily discharges over a calendar week exceeds the AWEL for a given parameter, this will represent a single violation, though the Discharger may be considered out of compliance for each day of that week for that parameter, resulting in 7 days of non-compliance. If only a single sample is taken during the calendar week and the analytical result for that sample exceeds the AWEL, the Discharger may be considered out of compliance for that calendar week. The Discharger will only be considered out of compliance for days when the discharge occurs. For any one calendar week during which no sample (daily discharge) is taken, no compliance determination can be made for that calendar week.

D. Maximum Daily Effluent Limitation (MDEL).
If a daily discharge or when applicable, the median determined by subsection F above for multiple sample data of a daily discharge exceeds the MDEL for a given parameter, the Discharger will be considered out of compliance for that parameter for that 1 day only within the reporting period. For any 1 day during which no sample is taken, no compliance determination can be made for that day.

E. 12-Month Running Average
Compliance with the 12-month flow weighted running average limits under Reclamation Specification IV.A. 2. shall be determined by dividing the sum of the products of the average concentration of the recycled water for each of the previous 12 months multiplied by the volume of recycled water discharged/used over, or tributary to, each groundwater management zone during each month for the previous 12 months, by the total volume discharged/used over the groundwater management zone during the previous 12 months. (Sum of monthly concentrations multiplied by monthly flows for previous 12 months divided by sum of monthly flows for previous 12 months.)

F. Multiple Sample Data.
When determining compliance with an AMEL for toxic pollutants and more than one sample result is available in a month, the Discharger shall compute the arithmetic mean unless the data set contains one or more reported determinations of "Detected, but Not Quantified" (DNQ) or "Not Detected" (ND). In those cases, the Discharger shall compute the median in place of the arithmetic mean in accordance with the following procedure:

1. The data set shall be ranked from low to high, ranking the reported ND determinations lowest, DNQ determinations next, followed by quantified values (if any). The order of the individual ND or DNQ determinations is unimportant.

2. The median value of the data set shall be determined. If the data set has an odd number of data points, then the median is the middle value. If the data set has an even number of data points, then the median is the average of the two values around the middle unless one or both of the points are ND or DNQ, in which case the median value shall be the lower of the two data points where DNQ is lower than a value and ND is lower than DNQ.

G. Turbidity Limitations.

The Discharger shall be considered in compliance with Discharge Specifications IV.A.3.(1), if the following conditions are met. If the Discharger is using a properly operating backup turbidimeter, the reading of the backup turbidimeter shall be considered in determining whether there has been an actual noncompliance:

1. There are no excursions above the limits specified in Discharge Specifications IV.A.3.(1)(a) and IV.A.3.(1)(b);
2. The apparent exceedance was caused by interference with, or malfunction of, the monitoring instrument.

H. Compliance Determination.

Compliance determinations shall be based on available analyses for the time interval associated with the effluent limitation. Where only one sample analysis is available in a specified time interval (e. g., monthly or weekly average), that sample shall serve to characterize the discharge for the entire interval. If quarterly sample results show noncompliance with the average monthly limit and that sample result is used for compliance determinations for each month of the quarter, then three separate violations of the average monthly limit shall be deemed to have occurred.

ATTACHMENT A – DEFINITIONS

Arithmetic Mean (μ), also called the average, is the sum of measured values divided by the number of samples. For ambient water concentrations, the arithmetic mean is calculated as follows:

Arithmetic mean = $\mu = \Sigma x / n$

where: Σx is the sum of the measured ambient water concentrations, and
n is the number of samples.

Average Monthly Effluent Limitation (AMEL): the highest allowable average of daily discharges over a calendar month, calculated as the sum of all daily discharges measured during a calendar month divided by the number of daily discharges measured during that month.

Average Weekly Effluent Limitation (AWEL): the highest allowable average of daily discharges over a calendar week (Sunday through Saturday), calculated as the sum of all daily discharges measured during a calendar week divided by the number of daily discharges measured during that week.

Best Management Practices (BMPs) are methods, measures, or practices designed and selected to reduce or eliminate the discharge of pollutants to surface waters from point and nonpoint source discharges including storm water. BMPs include structural and non-structural controls, and operation and maintenance procedures, which can be applied before, during, and/or after pollution producing activities.

Bioaccumulative pollutants are those substances taken up by an organism from its surrounding medium through gill membranes, epithelial tissue, or from food and subsequently concentrated and retained in the body of the organism.

Carcinogenic pollutants are substances that are known to cause cancer in living organisms.

Daily Discharge: Daily Discharge is defined as either: (1) the total mass of the constituent discharged over the calendar day (12:00 am through 11:59 pm) or any 24-hour period that reasonably represents a calendar day for purposes of sampling (as specified in the permit), for a constituent with limitations expressed in units of mass or; (2) the unweighted arithmetic mean measurement of the constituent over the day for a constituent with limitations expressed in other units of measurement (e.g., concentration).

The daily discharge may be determined by the analytical results of a composite sample taken over the course of one day (a calendar day or other 24-hour period defined as a day) or by the arithmetic mean of analytical results from one or more grab samples taken over the course of the day.

Detected, but Not Quantified (DNQ) are those sample results less than the RL, but greater than or equal to the laboratory's MDL.

Estimated Chemical Concentration is the estimated chemical concentration that results from the confirmed detection of the substance by the analytical method below the ML value.

Existing Discharger means any discharger that is not a new discharger. An existing discharger includes an "increasing discharger" (i.e., an existing facility with treatment systems in place for its current discharge that is or will be expanding, upgrading, or modifying its existing permitted discharge after the effective date of this Policy).

Infeasible means not capable of being accomplished in a successful manner within a reasonable period of time, taking into account economic, environmental, legal, social, and technological factors.

Inland Surface Waters are all surface waters of the State that do not include the ocean, enclosed bays, or estuaries.

Instantaneous Maximum Effluent Limitation: the highest allowable value for any single grab sample or aliquot (i.e., each grab sample or aliquot is independently compared to the instantaneous maximum limitation).

Instantaneous Minimum Effluent Limitation: the lowest allowable value for any single grab sample or aliquot (i.e., each grab sample or aliquot is independently compared to the instantaneous minimum limitation).

Maximum Daily Flow is the maximum flow sample of all samples collected in a calendar day.

Maximum Daily Effluent Limitation (MDEL) means the highest allowable daily discharge of a pollutant, over a calendar day (or 24-hour period). For pollutants with limitations expressed in units of mass, the daily discharge is calculated as the total mass of the pollutant discharged over the day. For pollutants with limitations expressed in other units of measurement, the daily discharge is calculated as the arithmetic mean measurement of the pollutant over the day.

MEC: Maximum Effluent Concentration.

Median is the middle measurement in a set of data. The median of a set of data is found by first arranging the measurements in order of magnitude (either increasing or decreasing order). If the number of measurements (n) is odd, then the median = $X_{(n+1)/2}$. If n is even, then the median = $(X_{n/2} + X_{(n/2)+1})/2$ (i.e., the midpoint between the $n/2$ and $n/2+1$).

Method Detection Limit (MDL) is the minimum concentration of a substance that can be measured and reported with 99 percent confidence that the analyte concentration is greater than zero, as defined in 40 CFR 136, Appendix B, revised as of May 14, 1999.

Minimum Level (ML) is the concentration at which the entire analytical system must give a recognizable signal and acceptable calibration point. The ML is the concentration in a sample that is equivalent to the concentration of the lowest calibration standard analyzed by a specific

analytical procedure, assuming that all the method specified sample weights, volumes, and processing steps have been followed.

Not Detected (ND) are those sample results less than the laboratory's MDL.

Persistent pollutants are substances for which degradation or decomposition in the environment is nonexistent or very slow.

Pollutant Minimization Program (PMP) means waste minimization and pollution prevention actions that include, but are not limited to, product substitution, waste stream recycling, alternative waste management methods, and education of the public and businesses. The goal of the PMP shall be to reduce all potential sources of a priority pollutant(s) through pollutant minimization (control) strategies, including pollution prevention measures as appropriate, to maintain the effluent concentration at or below the water quality-based effluent limitation. Pollution prevention measures may be particularly appropriate for persistent bioaccumulative priority pollutants where there is evidence that beneficial uses are being impacted. The Regional Water Board may consider cost-effectiveness when establishing the requirements of a PMP. The completion and implementation of a Pollution Prevention Plan, if required pursuant to CWC Section 13263.3(d), shall be considered to fulfill the PMP requirements. The following reporting protocols and definitions are used in determining the need to conduct a Pollution Minimization Program (PMP). Reporting protocols in the Monitoring and Reporting Program, Attachment E, Section X.B.4 describe sample results that are to be reported as Detected but Not Quantified (DNQ) or Not Detected (ND). Definitions for a Minimum Level (ML) and Method Detection Limit (MDL) are provided in Attachment A. A Reporting Level (RL) is the ML associated with an analytical method selected by the Discharger that is authorized for monitoring effluent limitations under this Order.

Pollution Prevention means any action that causes a net reduction in the use or generation of a hazardous substance or other pollutant that is discharged into water and includes, but is not limited to, input change, operational improvement, production process change, and product reformulation (as defined in Water Code Section 13263.3). Pollution prevention does not include actions that merely shift a pollutant in wastewater from one environmental medium to another environmental medium, unless clear environmental benefits of such an approach are identified to the satisfaction of the SWRCB or RWQCB.

Process Optimization means minor changes to the existing facility and treatment plant operations that optimize the effectiveness of the existing treatment processes.

Public Entity includes the federal government or a state, county, city and county, city, district, public authority, or public agency.

Reporting Level (RL) is the ML corresponding to an approved analytical method for reporting a sample result that is selected either from Appendix 4 of the SIP by the Regional Water Board in accordance with Section 2.4.2 of the SIP or established in accordance with Section 2.4.3 of the SIP. The ML is based on the proper application of method-based analytical procedures for sample preparation and the absence of any matrix interferences. Other factors may be applied to the ML depending on the specific sample preparation steps employed. For example, the treatment typically applied in cases where there are matrix-effects is to dilute the sample or sample aliquot by a factor of ten. In such cases, this additional factor must be applied to the ML in the computation of the RL.

Source of Drinking Water is any water designated as municipal or domestic supply (MUN) in a RWQCB basin plan.

12-Month Running Average Effluent Limitation (12-MRAEL): the highest allowable average of monthly discharges over last twelve months, calculated as the sum of all monthly discharges measured during last twelve months divided by the number of monthly discharges measured during that time period.

Attachment B1 -- WRDP Location Map

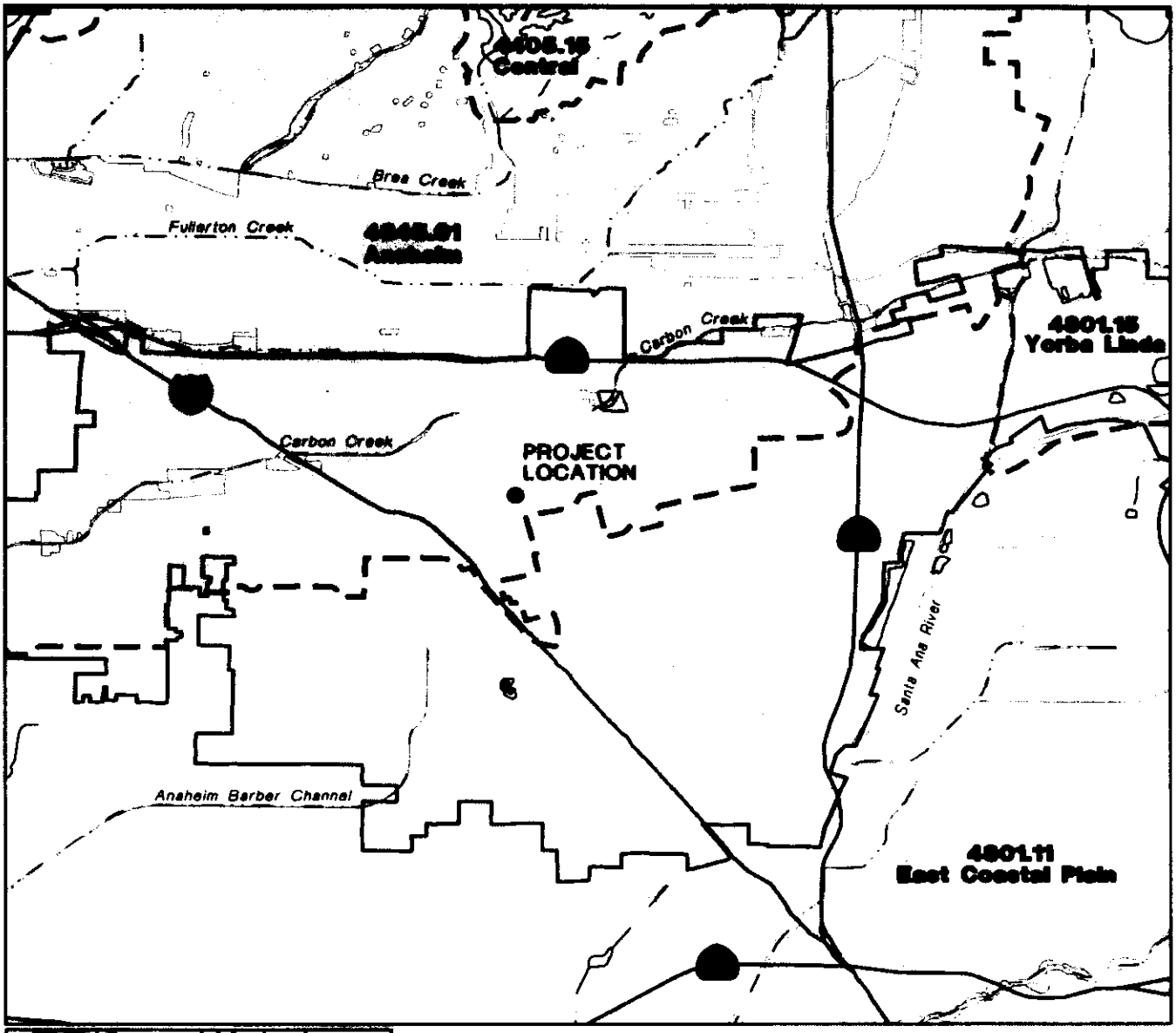

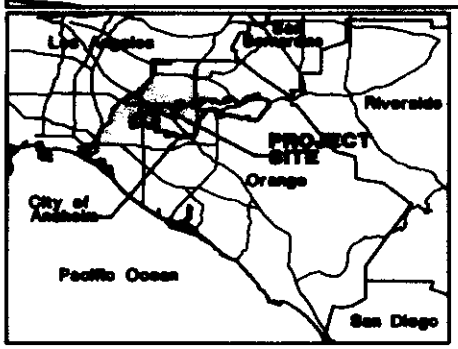

VICINITY
NO SCALE

LEGEND
- CITY OF ANAHEIM
- HSA BOUNDARY
- RIVER
- FEMA 100 YEAR
- COUNTY BOUNDARY

N

0 2000
SCALE IN FEET

HYDROLOGIC SUB AREAS
FIGURE 4-1

H:\Waterres\Anaheim\10005086\Graphics\EngRpt\5086Anaheim-HSA.dwg 6-08-2009

Attachment B2 - Vicinity / Aerial Map of WRDP and use sites

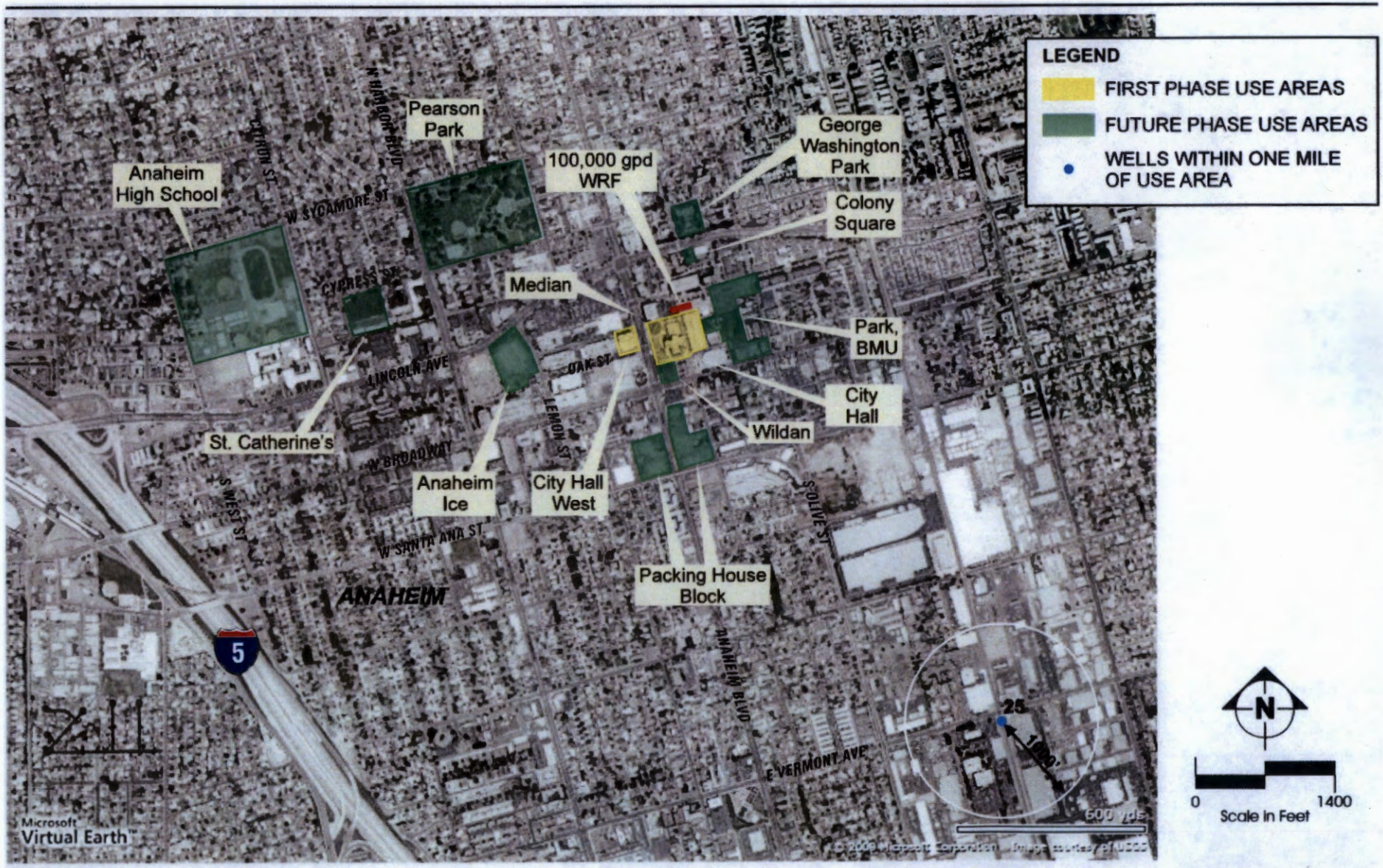

WRDP USE AREAS

ATTACHMENT C – FLOW SCHEMATIC

Secondary/Tertiary Recycled Water System Schematic

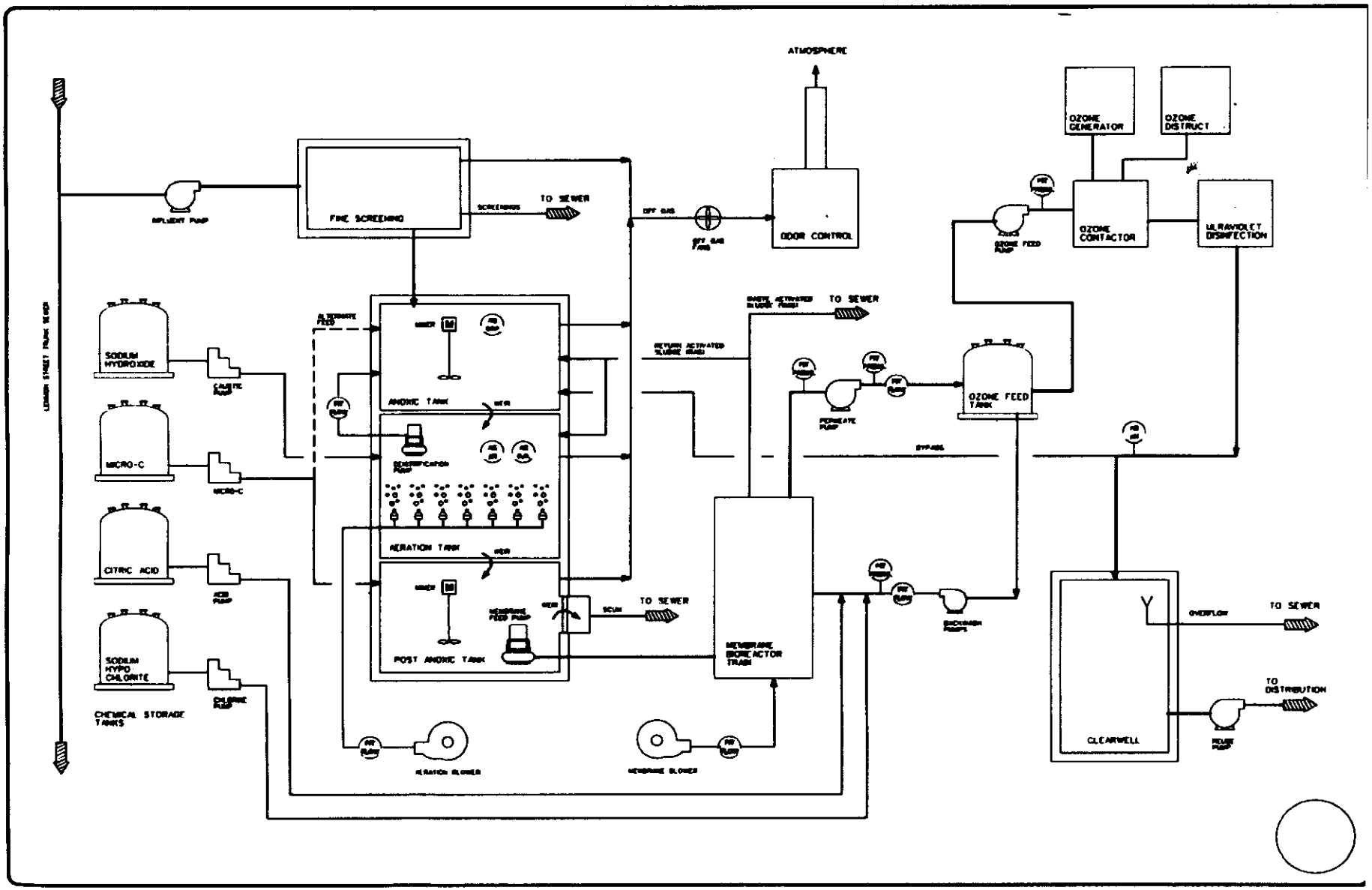

Attachment E – Monitoring and Reporting Program

Table of Contents

Attachment E – Monitoring and Reporting Program E-2
I. General Monitoring Provisions E-2
A. General Monitoring Provision E-2
II. Monitoring Locations E-4
III. Influent Monitoring Requirements E-5
A. Influent Monitoring E-5
IV. Reclamation Monitoring Requirements E-6
A. Recycled Water Monitoring Location REC-001 ..... E-6
B. Monitoring Users E-6
VI. Other Monitoring Requirements E-6
A. Biosolids Monitoring E-7
B. Water Supply Monitoring E-7
C. Pretreatment Monitoring and Reporting – Not applicable E-7
VII. Reporting Requirements E-7
A. General Monitoring and Reporting Requirements E-7
B. Self Monitoring Reports (SMRs) E-9

ATTACHMENT E – MONITORING AND REPORTING PROGRAM

California Water Code Section 13267 authorizes the Regional Water Board to require technical and monitoring reports. This MRP establishes monitoring and reporting requirements that implement the federal and California regulations.

I. GENERAL MONITORING PROVISIONS

A. General Monitoring Provision

1. All sampling, sample preservation, and analytical procedures shall be in accordance with the current approved edition of "*Standard Methods for the Examination of Water and Wastewater*" (American Public Health Association) and/or 40 CFR Part 136 approved methods unless otherwise specified by the Executive Officer of the Regional Water Board.

2. Chemical, bacteriological, and bioassay analyses shall be conducted at a laboratory certified for such analyses by the California Department of Public Health in accordance with the provision of Water Code Section 13176, and must include quality assurance/quality control data with their reports, or at laboratories approved by the Executive Officer of the Regional Water Board.

3. Whenever the Discharger monitors any pollutant at a specified monitoring location more frequently than is required by this Order, the results of this monitoring shall be included in the calculation and reporting of the data submitted in the discharge monitoring report specified by this Order.

4. For every item of monitoring data where the requirements are not met, the monitoring report shall include a statement discussing the reasons for noncompliance, the actions undertaken or proposed that will bring the discharge into full compliance with requirements at the earliest time, and an estimate of the date when the Discharger will be in compliance. The Discharger shall notify the Regional Water Board by letter when compliance with the time schedule has been achieved.

5. The Discharger shall assure that records of all monitoring information are maintained and accessible for a period of at least five years from the date of the sample, report, or application. This period of retention shall be extended during the course of any unresolved litigation regarding this discharge or by the request of the Regional Water Board at any time. Records of monitoring information shall include:

    a. The laboratory which performed the analyses;
    b. The date(s) analyses were performed;
    c. The individual(s) who performed the analyses;
    d. The modification(s) to analytical techniques or methods used;
    e. All sampling and analytical results, including

(1) Units of measurement used;
(2) Minimum reporting level (RL) for the analysis or the minimum level (ML);
(3) Results less than the reporting level (RL) or the minimum level (ML), but above the method detection limit (MDL);
(4) Data qualifiers and a description of the qualifiers;
(5) Quality control test results (and a written copy of the laboratory quality assurance plan);
(6) Dilution factors, if used; and
(7) Sample matrix type.

f. All monitoring equipment calibration and maintenance records;
g. All original strip charts from continuous monitoring devices;
h. All data used to complete the application for this Order; and,
i. Copies of all reports required by this Order.
j. Electronic data and information generated by the Supervisory Control and Data Acquisition (SCADA) System.

6. The flow measurement system shall be calibrated at least once per year or more frequently, to ensure continued accuracy.

7. All monitoring instruments and devices used by the Discharger to fulfill the prescribed monitoring program shall be properly maintained and calibrated as necessary to ensure their continued accuracy. In the event that continuous monitoring equipment is out of service for greater than a 24-hour period, the Discharger shall obtain a representative grab sample each day the equipment is out of service. The Discharger shall correct the cause(s) of failure of the continuous monitoring equipment as soon as practicable. In its monitoring report, the Discharger shall specify the period(s) during which the equipment was out of service and if the problem has not been corrected, shall identify the steps which the Discharger is taking or proposes to take to bring the equipment back into service and the schedule for these actions.

8. Monitoring and reporting shall be in accordance with the following:

   a. Samples and measurements taken for the purpose of monitoring shall be representative of the monitored activity.

   b. The monitoring and reporting of influent, effluent, and sludge shall be done more frequently as necessary to maintain compliance with this Order and or as specified in this order.

   c. A "grab" sample is defined as any individual sample collected in less than 15 minutes.

d. A composite sample is defined as a combination of no fewer than eight individual grab samples obtained over the specified sampling period. The volume of each individual grab sample shall be proportional to the discharge flow rate at the time of sampling. The compositing period shall equal the specific sampling period, or 24 hours, if no period is specified.

e. Daily samples shall be collected on each day of the week.

f. Weekly samples shall be collected on any representative day during a week.

g. Monthly samples shall be collected on any representative day of each month.

II. MONITORING LOCATIONS

The Discharger shall establish the following monitoring locations to demonstrate compliance with the effluent limitations, discharge specifications, and other requirements in this Order.

Table 1. Monitoring Station Locations

Discharge Point Name	Monitoring Location Name	Monitoring Location Description	Latitude	Longitude
	M-INF1	WRDP influent at the headworks	33°50'06"N	117°54'55"W
DP 001	REC-001	WRDP Recycled Water Effluent	33°50'06"N	117°54'55"W

III. INFLUENT MONITORING REQUIREMENTS

A. Influent Monitoring

1. The Discharger shall monitor the influent to WRDP at the influent monitoring station location specified in Table 1, above, for the following constituents.

Table 2. Influent Monitoring at M-INF1

Parameter	Units	Sample Type	Minimum Sampling Frequency
Flow	mgd	Recorder/Totalizer	Continuous
pH	pH Units	Grab	3 days/week[1]
Specific Conductance	µmhos/cm	Grab	3 days/week[1]
BOD_5	mg/L	Composite	Weekly
Total Suspended Solids	mg/L	Composite	Weekly
Total Dissolved Solids (TDS)	mg/L	Composite	Monthly
Total Inorganic Nitrogen (TIN)	mg/L	Composite	Monthly
Ammonia-Nitrogen	mg/L	Composite	Monthly

[1] *Collection of samples for this parameter is not needed on weekends and national holidays. National holidays: Independence Day, Labor Day, Veterans Day, Thanksgiving Day, Christmas Day, New Year's Day, President's Day, and Memorial Day.*

IV. RECLAMATION MONITORING REQUIREMENTS

A. Recycled Water Monitoring Location REC-001

1. The Discharger shall monitor the recycled water entering its distribution system at monitoring location REC-001, as specified in Table 1., above, for the following constituents.

Table 3. Recycled Water Monitoring at REC-001

Parameter	Units	Sample Type	Minimum Sampling & Testing Frequency
Flow	mgd	Recorder/Totalizer	Continuous
pH	Standard units	Recorder/Totalizer	Continuous
CT[2]	mg/L-min	Calculation	Continuous
Turbidity[3]	NTU	Recorder	Continuous
Coliform Organisms	MPN per 100 mL	Grab	Daily[1]
BOD_5	mg/L	composite	Weekly
Total Suspended Solids	mg/L	composite	Weekly
TDS	mg/L	composite	Monthly
TIN	mg/L	Composite	Monthly

B. Monitoring Users

Whenever recycled water is supplied to a user, the Discharger shall record on a permanent log: the volume of recycled water supplied; the user of recycled water; the locations of those sites; the type of use (e.g. irrigation, industrial, etc); and the dates at which water is supplied.

The Discharger shall submit a quarterly report summarizing reclaimed water use, including the total amount of reclaimed water supplied, the total number of reclaimed water use sites, and the locations of those sites.

VI. OTHER MONITORING REQUIREMENTS

---

2 *CT is the product of total ozone residual and modal contact time measured at the same point.*

3 *Turbidity analysis shall be continuous, performed by a continuous recording turbidimeter. The results of the daily average turbidity determinations shall be reported monthly. Turbidity samples shall be collected after filtration units but before disinfection.*

A. Biosolids Monitoring

1. The Discharger shall maintain a permanent log of solids hauled away from the treatment facilities for use/disposal elsewhere, including the date hauled, the volume or weight (in dry tons), type (screening, grit, raw sludge, biosolids), application (agricultural, composting, etc), and destination. The disposal of waste sludge from WRDP to the sewer shall be reported quarterly.

B. Water Supply Monitoring

1. In August of each year, a sample of each source of the water supplied to the sewered area shall be obtained and analyzed for total dissolved solids concentration expressed in "mg/L".

2. An annual report shall be submitted stating the amount (in percentage or acre-feet) supplied to the sewered area from each source of water and the resulting flow-weighted water supply quality for total dissolved solids.

C. Pretreatment Monitoring and Reporting – Not applicable

VII. REPORTING REQUIREMENTS

A. General Monitoring and Reporting Requirements

1. All analytical data shall be reported with method detection limit[4] (MDLs) and with identification of either reporting level (RL), minimum level (ML), or limits of quantitation (LOQs).

2. Laboratory data for effluent samples must quantify each constituent down to the approved reporting levels (RL) or minimum level (ML) for specific constituents. Any internal quality control data associated with the sample must be reported when requested by the Executive Officer. The Regional Water Board will reject the quantified laboratory data if quality control data is unavailable or unacceptable.

3. Discharge monitoring data shall be submitted in a format acceptable by the Regional Water Board. Specific reporting format may include preprinted forms and/or electronic media. The results of all monitoring required by this Order shall be reported to the Regional Water Board, and shall be submitted in such a format as to allow direct comparison with the limitations and requirements of this order.

4. The Discharger shall tabulate the monitoring data to clearly illustrate compliance and/or noncompliance with the requirements of the Order.

---

4 *The standardized test procedure to be used to determine the method detection limit (MDL) is given at Appendix B, 'Definition and Procedure for the Determination of the Method Detection Limit' of 40 CFR 136.*

5. For every item of monitoring data where the requirements are not met, the monitoring report shall include a statement discussing the reasons for noncompliance, and of the actions undertaken or proposed which will bring the discharge into full compliance with requirements at the earliest time, and an estimate of the date when the Discharger will be in compliance. The Discharger shall notify the Regional Water Board by letter when compliance with the time schedule has been achieved.

6. SMRs shall be signed by either the principal Executive Officer or ranking elected official. A duly authorized representative of the aforementioned signatories may sign documents if:

   a. The authorization is made in writing by the signatory;

   b. The authorization specifies the representative as either an individual or position having responsibility for the overall operation of the regulated facility or activity: and

   c. The written authorization is submitted to the Executive Officer of this Regional Board.

7. SMRs shall contain the following completed declaration:

   "I certify under penalty of law that this document and all attachments were prepared under my direction or supervision in accordance with a system designed to assure that qualified personnel properly gather and evaluate the information submitted. Based on my inquiry of the person or persons who manage the system or those persons directly responsible for gathering the information, the information submitted is, to the best of my knowledge and belief, true, accurate, and complete. I am aware that there are significant penalties for submitting false information, including the possibility of fine and imprisonment for knowing violations."

8. The monthly reports for June and December shall include a roster of plant personnel, including job titles, duties, and level of State certification for each individual.

9. The Discharger shall prepare a monthly summary of operating records. The monthly summary shall include operational problems, plant and equipment breakdowns, diversion to emergency storage or disposal, and all corrective or preventive action taken. The monthly summary of operating records shall be reported monthly.

10. The Discharger shall report monitoring results for specific parameters in accordance with the following table:

Table 4. Reporting Requirements

Parameter	Measurement
Flow	Daily total flow
pH	Daily High and daily low

Table 4. Reporting Requirements

Parameter	Measurement
Turbidity	Daily maximum and daily average
CT	Daily minimum and daily average

B. Self Monitoring Reports (SMRs)

1. Monitoring Reports shall be submitted by the last day of each month and shall include all data collected during the previous month.

2. At any time during the term of this permit, the State or Regional Water Board may notify the Discharger to electronically submit Self-Monitoring Reports (SMRs) using the State Water Board's California Integrated Water Quality System (CIWQS) Program Web site (http://www.waterboards.ca.gov/ciwqs/index.html). Until such notification is given, the Discharger shall submit hard copy SMRs. The CIWQS Web site will provide additional directions for SMR submittal in the event there will be service interruption for electronic submittal.

3. Reporting Protocols. The Discharger shall report with each sample result the applicable Reporting Level (RL), or Minimum Level (ML), and the current Method Detection Limit (MDL), as determined by the procedure in 40 CFR Part 136.

   The Discharger shall report the results of analytical determinations for the presence of chemical constituents in a sample using the following reporting protocols:

   a. Sample results greater than or equal to the RL shall be reported as measured by the laboratory (i.e., the measured chemical concentration in the sample).

   b. Sample results less than the RL, but greater than or equal to the laboratory's MDL, shall be reported as "Detected, but Not Quantified," or DNQ. The *estimated chemical concentration of the sample shall also be reported.

      For the purposes of data collection, the laboratory shall write the estimated chemical concentration next to DNQ as well as the words "Estimated Concentration" (may be shortened to "Est. Conc."). The laboratory may, if such information is available, include numerical estimates of the data quality for the reported result. Numerical estimates of data quality may be percent accuracy (± a percentage of the reported value), numerical ranges (low to high), or any other means considered appropriate by the laboratory.

   c. Sample results less than the laboratory's MDL shall be reported as "Not Detected," or ND.

   d. Dischargers are to instruct laboratories to establish calibration standards so that the ML value (or its equivalent if there is differential treatment of samples relative to calibration standards) is the lowest calibration standard. At no time is the Discharger to use analytical data derived from *extrapolation* beyond the lowest point of the calibration curve.

4. The Discharger shall submit hard copy SMRs (with an original signature) when required by subsection B.1 above in accordance with the following requirements:

   a. The Discharger shall arrange all reported data in a tabular format. The data shall be summarized to clearly illustrate whether the facility is operating in compliance with interim and/or final effluent limitations.

   b. The Discharger shall attach a cover letter to the SMR. The information contained in the cover letter shall clearly identify violations of the WDRs; discuss corrective actions taken or planned; and the proposed time schedule for corrective actions. Identified violations must include a description of the requirement that was violated and a description of the violation.

   c. SMRs must be submitted to the Regional Water Board, signed and certified as specified by Reporting Requirement VII.A.6. and VII.A.7. above, to the address listed below:

      California Regional Water Quality Control Board
      Santa Ana Region
      3737 Main Street, Suite 500
      Riverside, CA 92501-3348

5. By April 1 of each year, the Discharger shall submit an annual report to the Regional Water Board. The annual report shall include the following:

   a. Tabular and graphical summaries of the monitoring data obtained during the previous year;

   b. A discussion of the compliance record and the corrective actions taken or planned, which may be needed to bring the discharge into full compliance with the waste discharge requirements; and

   c. A summary of the quality assurance (QA) activities for the previous year.

Attachment F – FACT SHEET

TABLE OF CONTENTS

I. Discharger/Facility Information F-3
II. Facility Description F-4
A. Description of Wastewater and Biosolids Treatment or Controls F-4
1. Facility Background F-4
2. Service Area F-4
3. Design Characteristics F-5
B. Discharge Points and Receiving Waters F-5
1. Discharge Point for Recycling Water Reuse - 001 ..... F-5
2. Stormwater F-6
III. Applicable Plans, Policies, and Regulations F-6
A. Legal Authorities F-6
B. California Environmental Quality Act (CEQA) F-6
C. State Regulations, Policies, and Plans F-6
D. Other Plans, Polices and Regulations – Not Applicable F-9
IV. Rationale For Effluent Limitations and Discharge Specifications F-9
A. Discharge Prohibitions F-9
B. Technology-Based Effluent Limitations – Not Applicable F-9
C. Water Quality-Based Effluent Limitations (WQBELs) For Land Disposal – Not Applicable F-9
D. Best Professional Judgment-Based Effluent Limitations F-9
E. Summary of Land Disposal Limitations – Not Applicable F-9
F. Reclamation Specifications - DP 001 ..... F-10
V. Rationale for Receiving Water Limitations F-11
A. Surface Water – Not Applicable F-11
B. Groundwater F-11
VI. Rationale for Monitoring and Reporting Requirements F-11
A. Influent Monitoring F-11
B. Effluent Monitoring F-11
C. Other Monitoring Requirements F-11
1. Water Supply Monitoring F-11
2. Biosolids Monitoring – Not Applicable F-12
3. Pretreatment Monitoring – Not Applicable F-12
VII. Rationale for Provisions F-12
A. Provisions F-12
1. Special Studies and Additional Monitoring Requirements F-12
2. Construction, Operation, and Maintenance Specifications F-12
3. Special Provisions for Municipal Facility - POTWs Only F-12
VIII. Public Participation F-13
A. Notification of Interested Parties F-13
B. Written Comments F-14
C. Public Hearing F-14

C. Public Hearing F-14
D. Waste Discharge Requirements Petitions F-14
E. Information and Copying F-15
F. Register of Interested Persons F-15
G. Additional Information F-15

List of Tables

Table 1. Discharger/Facility Information F-3
Table 2. Plant Design F-5
Table 3. Discharge Points F-5
Table 4. Basin Plan Beneficial Uses F-7
Table 5. Effluent BOD_5 and TSS Limits for Tertiary Effluent F-9
Table 6. Summary of Recycled Water Limitations at DP 001 ..... F-10

ATTACHMENT F – FACT SHEET

As described in Section II of this Order, this Fact Sheet includes the legal requirements and technical rationale that serve as the basis for the requirements of this Order.

This Order has been prepared under a standardized format to accommodate a broad range of discharge requirements for Dischargers in California. Only those sections or subsections of this Order that are specifically identified as "not applicable" have been determined not to apply to this Discharger. Sections or subsections of this Order not specifically identified as "not applicable" are fully applicable to this Discharger.

I. DISCHARGER/FACILITY INFORMATION

The following table summarizes administrative information related to the Discharger/Facility:

Table 1. Discharger/Facility Information	
WDID	8 303598001
Discharger/Operator	City of Anaheim
Name of Facility	Water Recycling Demonstration Project
Facility Address	210 S. Anaheim Boulevard, Anaheim, CA 92805
Facility Contact, Title and Phone	Richard Wilson, (714) 765-4277 DWilson@anaheim.net
Authorized Person to Sign and Submit Reports	Marcie L. Edwards, Public Utilities General Manager, (714) 765-5424 medwards@anaheim.net
Mailing/Billing Address	201 S. Anaheim Blvd., Suite 601, Anaheim, CA 92805
Type of Facility	POTW
Threat to Water Quality	2
Complexity	B
Pretreatment Program	N
Reclamation Requirements	Producer/User
Facility Design Flow	0.05 mgd tertiary treatment
Facility Permitted Flow	0.05 mgd
Receiving Water	Orange Groundwater Management Zone
Receiving Water Type	Groundwater
Watershed	Santa Ana River Watershed

A. The City of Anaheim (hereinafter Discharger, or the City) owns and will operate, through a contract operator, the Water Recycling Demonstration Project (hereinafter WRDP or Facility), a publicly owned wastewater treatment plant and recycled water distribution system. The design and construction of the WRDP has been completed and the City plans to start the operation of its components during June 2013. The facility will produce up to 0.05 million-gallons-per-day (MGD) of disinfected tertiary treated recycled water for delivery to several users through its recycled water distribution system. The recycled water use areas overlie the Orange Groundwater Management Zone

B. The Discharger submitted a report of waste discharge for the issuance of Waste Discharge Requirements and a Master Reclamation Permit on August 25, 2009 for the facility. The application was deemed complete on January 27, 2010. The facility was inspected by Board staff on March 7, 2013.

II. FACILITY DESCRIPTION

A. Description of Wastewater and Biosolids Treatment or Controls

1. Facility Background

The City owns and operates the sewer collection system and the wastewater generated within its service area is sent to the Orange County Sanitation District's (OCSD's) wastewater treatment plants for treatment and disposal.

The City will operate the WRDP to produce and distribute highly treated tertiary disinfected recycled water for uses such as landscape irrigation, urinal/toilet flushing, cooling towers, and makeup water at Anaheim Ice. The goal of the City is to offset potable water demand and demonstrate the viability of recycled water as a resource. The WRDP consist of one 50,000 gallons-per-day treatment capacity module, which may be expanded in the future by building a second module with the same treatment capacity. Influent sewage will be drawn from a trunk sewer line through a diversion structure, which will include a pump station. The screenings, ultrafiltration reject, and waste activated sludge will be discharged into the City sewer system for ultimate treatment at OCSD's wastewater treatment plants.

2. Service Area

Raw sewage will be drawn from the City's Lemon trunk sewer line through a diversion structure. The service area of WRDP consists of low to high density residential, commercial, and professional offices.

3. Design Characteristics

The following table summarizes the treatment processes at the WRDP:

Table 2. Plant Design

Preliminary Treatment	Screens
Primary Treatment	Not available
Secondary Treatment	0.05 mgd activated sludge
Tertiary Treatment	0.05 mgd ultrafiltration, ozone disinfection, and UV radiation
Solids Handling	Screenings and sludge discharged to City sewer for ultimate treatment and disposal at OCSD.

B. Discharge Points and Receiving Waters

Following table shows the discharge point, longitude and latitude, affected receiving waters, and estimated volume of discharge:

Table 3. Discharge Points

Discharge Serial No.	Effluent Description	Location (Latitude & Longitude)	Receiving Water	Flow & Frequency
DP 001 Recycled Water	Disinfected Tertiary	33°50'06"N 117°54'55"W	Orange Groundwater Management Zone	Up to 0.05 mgd, intermittent

1. Discharge Point for Recycling Water Reuse – DP 001

The Discharger plans to distribute up to 0.05 mgd of tertiary treated wastewater via DP 001 to the City's recycled water system by May 2013. The recycled water use area overlies the Orange Groundwater Management Zone.

2. Stormwater

Industrial Stormwater Requirements. Pursuant to Section 402(p) of the Clean Water Act and Title 40 of the Code of Federal Regulations (CFR) Part 122, 123, and 124, the State Water Resources Control Board adopted a general NPDES permit to regulate storm water discharges associated with industrial activities (State Board Order No. 97-03-DWQ) on April 17, 1997. The facility treatment capacity will be less than 1 MGD and the treatment processes will be enclosed within a building, therefore, the WRDP is exempt from coverage under the State Board Order No. 97-03-DWQ.

III. APPLICABLE PLANS, POLICIES, AND REGULATIONS

The requirements contained in the proposed Order are based on the requirements and authorities described in this section.

A. Legal Authorities

This Order serves as Waste Discharge Requirements pursuant to article 4, Chapter 4, Division 7 of the Water Code (commencing with Section 13260). Also, this Order serves as a Master Reclamation Permit pursuant to Section 13523.1 of Article 4, Chapter 7, Division 7 of the California Water Code.

B. California Environmental Quality Act (CEQA)

In compliance with the California Environmental Quality Act (CEQA), the Discharger completed the CEQA study for the WRDP. A Mitigated Negative Declaration was certified by the City of Anaheim and a Notice of Determination was filed on January 27, 2010. The Initial Study/Mitigated Negative Declaration identified exceedances of the TDS water quality objective for the Orange Management Zone as a less-than-significant impact to the environment and has proposed to mitigate the impact by implementing a TDS mitigation plan. Board staff has preliminarily approved the TDS offset strategy proposed by the Discharger and did not find any other significant adverse impact to water quality as a result of the production and use of recycled water.

C. State Regulations, Policies, and Plans

1. **Water Quality Control Plans.** The Regional Water Board adopted a Water Quality Control Plan for the Santa Ana Basin (hereinafter Basin Plan) that became effective on January 24, 1995. The Basin Plan designates beneficial uses, establishes water quality objectives, and contains implementation programs and policies to achieve those objectives for all waters addressed through the plan.

   On January 22, 2004, the Regional Water Board adopted Resolution No. R8-2004-0001, amending the Basin Plan to incorporate revised boundaries for groundwater subbasins, now termed "management zones", new nitrate-nitrogen and

TDS objectives for the new management zones, and new nitrogen and TDS management strategies applicable to both surface and ground waters. The State Water Board and Office of Administrative Law (OAL) approved the N/TDS Amendment on September 30, 2004 and December 23, 2004, respectively. Accordingly, these waste discharge requirements implement relevant, groundwater-related components of the N/TDS Amendment. Specifically, the total dissolved solids (TDS) limitation established in this Order is based on the amended Basin Plan.

As previously discussed, the Facility will produce tertiary treated recycled water to be used in areas overlying the Orange Groundwater Management Zone. The designated beneficial uses of receiving waters affected by the discharge from the Facility are as follows:

Table 4. Basin Plan Beneficial Uses

Discharge Point	Receiving Water	Beneficial Uses
001	Orange GMZ	Present or Potential: a. Municipal and domestic supply, b. Agricultural supply, c. Industrial service supply, and d. Industrial process supply

Requirements of this Order implement the Basin Plan.

Total Dissolved Solids/Total Inorganic Nitrogen Offset: The Basin Plan recognizes that strict compliance with TDS/TIN limits may be difficult to achieve and it describes the regulatory approach the Regional Water Board uses to address such situations. The Board incorporates offset provisions in waste discharge requirements whereby dischargers can implement an approved program to offset TDS/TIN discharges in excess of specified TDS/TIN limits, provided that the discharger makes all reasonable efforts to improve the TDS/TIN quality of the water supply (and thereby, the wastewater). The Discharger may not be able to meet the effluent limit for TDS for the Orange Groundwater Management Zone. On October 1, 2009, the Discharger submitted for the approval of the Executive Officer the report entitled, "Salt Mitigation Bank for the City of Anaheim" (TDS mitigation plan), dated September 25, 2009. The TDS mitigation plan evaluated the need for TDS offset and details the manner by which the offset will be accomplished and reported. However, the TDS mitigation plan did not include monitoring details to insure that pertinent data would be gathered to support the TDS offset computation. This Order requires the Discharger to submit a final TDS mitigation plan. See Provision VI.C.1.b.

2. **Antidegradation Policy.** The State Water Board established California's antidegradation policy in State Water Board Resolution No. 68-16. Resolution No. 68-16 incorporates the federal antidegradation policy where the federal policy applies under federal law. Resolution No. 68-16 requires that existing water quality be maintained unless degradation is justified based on specific findings. The Regional Water Board's Basin Plan implements, and incorporates by reference the State antidegradation policies. The Discharger is required to develop and implement an offset program for exceedances of TDS. The permitted discharge is consistent with the antidegradation provisions of State Water Board Resolution No. 68-16.

3. **Pretreatment.** The design capacity of the WRDP is less than 5 mgd and there are no significant industrial users within the service area. Consequently, this Order does not contain requirements for the implementation of an effective pretreatment program pursuant to Sections 2233 and 2235.3, Title 23, of the California Code of Regulations. (See Section VI.C.5.c., below)

4. **Biosolids Requirements.** On February 19, 1993, the USEPA issued a final rule for the use and disposal of sewage sludge, 40 CFR, Part 503. This rule requires that producers of sewage sludge meet certain reporting, handling, and disposal requirements. The State of California has not been delegated the authority to implement this program, therefore, the U.S. Environmental Protection Agency is the implementing agency. The sludge generated by the WRDP will be discharged to the local sewer and eventually treated in one of the wastewater treatment facilities owned by the Orange County Sanitation District; therefore, this Order does not include biosolids requirements.

5. **Monitoring and Reporting Requirements.** Section 13267 of the CWC authorizes the Regional Water Board to require technical and monitoring reports. The Monitoring and the Reporting Program (MRP) establishes monitoring and reporting requirements to implement state requirements. This MRP is provided in Attachment E.

D. Other Plans, Polices and Regulations – Not Applicable

IV. RATIONALE FOR EFFLUENT LIMITATIONS AND DISCHARGE SPECIFICATIONS

A. Discharge Prohibitions

The discharge prohibitions are based on the Basin Plan and State Water Resources Control Board's plans and policies. These prohibitions are consistent with the requirements set for other discharges regulated by WDRs adopted by the Regional Water Board.

B. Technology-Based Effluent Limitations – Not Applicable

C. Water Quality-Based Effluent Limitations (WQBELs) For Land Disposal – Not Applicable

D. Best Professional Judgment-Based Effluent Limitations

For tertiary treated wastewater, the BOD_5 and TSS concentration limits shown in the following table are based on Best Professional Judgment.

Table 5. Effluent BOD_5 and TSS Limits for Tertiary Effluent

Constituent	Average Weekly	Average Monthly
Biochemical Oxygen Demand	30 mg/L	20 mg/L
Suspended Solids	30 mg/L	20 mg/L

E. Summary of Land Disposal Limitations – Not Applicable

F. Reclamation Specifications - DP 001

1. Section 13523 of the California Water Code provides that a Regional Water Board, after consulting with and receiving the recommendations from the CDPH and any party who has requested in writing to be consulted, and after any necessary hearing, shall prescribe water reclamation requirements for water which is used or proposed to be used as recycled water, if, in the judgment of the Board, such requirements are necessary to protect the public health, safety, or welfare. Section 13523 further provides that such requirements shall include, or be in conformance with, the statewide uniform water recycling criteria established by the CDPH pursuant to California Water Code Section 13521.

2. Reclamation specifications in the proposed Order are based on the recycling criteria contained in Title 22, Division 4, Chapter 3, Sections 60301 through 60355, California Code of Regulations, and California Water Code Section 13521.

3. For recycled water use, this Order (Section IV.A.2. Reclamation Specifications – Discharge Point 001) specifies TDS limits based on the water quality objective for the Orange Groundwater Management Zone, which is 580 mg/l.

4. Summary of Recycled Water Limitations:

Table 6. Summary of Recycled Water Limitations at DP 001

Parameter	Units	Effluent Limitations					Basis
		Average Monthly or as noted herein	Average Weekly	Maximum Daily	Instantaneous Minimum	Instantaneous Maximum	
BOD_5	mg/L	20	30	--	--	--	BPJ
Total Suspended Solids	mg/L	20	30	--	--	--	BPJ
CT	milligram-minutes per liter	--	--	--	1.0	--	Title 22
Coliform	MPN/100 mL	23 not more than once	2.2 median in 7 days	240	--	--	Title 22
Turbidity	NTU	--	--	0.2		0.5	Title 22

5. The Basin Plan water quality objectives for TIN do not apply to recycled water use for agricultural and landscape irrigation because of plant uptake of nitrogen.

V. RATIONALE FOR RECEIVING WATER LIMITATIONS

A. Surface Water – Not Applicable

B. Groundwater

1. The receiving groundwater limitations in the proposed Order are based upon the water quality objectives contained in the amended Basin Plan.

VI. RATIONALE FOR MONITORING AND REPORTING REQUIREMENTS

Sections 13267 of the CWC authorize the Water Boards to require technical and monitoring reports. The Monitoring and Reporting Program (MRP), Attachment E of this Order, establishes monitoring and reporting requirements to implement federal and State requirements. The following provides the rationale for monitoring and reporting requirements contained in the MRP.

A. Influent Monitoring

Influent monitoring is required to evaluate the need for a pretreatment program and to assess treatment plant performance.

B. Effluent Monitoring

The Discharger is required to conduct monitoring of the permitted discharges in order to evaluate compliance with permit conditions. Monitoring requirements are included in the proposed MRP. The MRP includes Standard Monitoring Provisions. These provisions are standard requirements applicable to almost all waste discharge requirements issued by the Regional Water Board. In addition to containing definitions of terms, they specify general sampling/analytical protocols and requirements for reporting of spills, violations, and routine monitoring data in accordance with California Code of Regulations, the California Water Code, and Regional Water Board's policies. The MRP also contains a sampling program specific to the Discharger's wastewater treatment plant. It defines the sampling stations, frequency, pollutants to be monitored, and additional reporting requirements. Pollutants to be monitored include all pollutants for which effluent limitations are specified.

C. Other Monitoring Requirements

1. **Water Supply Monitoring**
   The Discharger is required to collect a sample of each source of water supplied and analyze for total dissolved solids. The result of this monitoring will enable the Discharger to show compliance with TDS limitations in the Order.

2. **Biosolids Monitoring – Not Applicable**
Biosolids produced in this facility are sent to the Orange County Sanitation District, through the sewer, for disposal and treatment. No biosolids monitoring is required in this Order.

3. **Pretreatment Monitoring – Not Applicable**
The design capacity of the WRDP is less than 5 mgd and there are no significant industrial users within the service area. Consequently, this Order does not contain requirements for the implementation of an effective pretreatment program pursuant to Sections 2233 and 2235.3, Title 23, of the California Code of Regulations.

VII. RATIONALE FOR PROVISIONS

A. Provisions

1. **Special Studies and Additional Monitoring Requirements**

This Order requires the discharger to submit a report that details the manner in which sampling, monitoring and reporting will be performed as required in the Order. This is a standard requirement for all POTW dischargers within the Region. Also, this Order requires the Discharger to submit a final TDS mitigation plan.

2. **Construction, Operation, and Maintenance Specifications**
The WRDP involves the production and distribution of tertiary recycled water for various uses and, therefore, must implement plant staffing, operational, maintenance, design, and reliability requirements contained in the Water Recycling Criteria (Title 22, Division 4, Chapter 3, Articles 7 through 10, California Code of Regulations). Also, the Discharger must ensure that operations staff of the WRDP has the proper certification as required under Title 23, Division 3, Chapter 26, California Code of Regulations.

3. **Special Provisions for Municipal Facility - POTWs Only**

a. Sewer Collection System Requirements

1. The State Water Board issued the Statewide General Waste Discharge Requirements for Sanitary Sewer Systems, Order No. 2006-0003-DWQ (General Order) on May 2, 2006, as amended by Order No. WQ. 2008-0002-EXEC. The General Order requires public agencies that own or operate sanitary sewer systems with greater than one mile of pipes or sewer lines to enroll for coverage under the General Order. The General Order requires agencies to develop sanitary sewer management plans (SSMPs) and report all sanitary sewer overflows (SSOs), among other requirements and prohibitions. The Discharger has enrolled and implemented these requirements.

Furthermore, the General Order contains requirements for operation and maintenance of collection systems and for reporting and mitigating sanitary sewer overflows. Inasmuch as the Discharger's collection system is part of the system that is subject to this Order, Provisions section VI.C.4.a. of this Order applies. For instance, the 24-hour reporting requirements in this Order (Provisions section VI.A.2.) are not included in the General Order. The Discharger must comply with both the General Order and this Order. The Discharger was required to obtain enrollment for regulation under the General Order. The Discharger has enrolled and implemented these requirements.

b. Sludge Disposal Requirements

1. Collected screenings, sludge, and other solids removed from liquid wastes shall be disposed of in a manner that is consistent with State Water Board and Integrated Waste Management Board's joint regulations (Title 27) of the California Code of Regulations and approved by the Regional Water Board's Executive Officer.

c. Pretreatment Program Requirements – Not applicable

1. The design capacity of the WRDP is less than 5 mgd and there are no significant industrial users within the service area. Consequently, this Order does not contain requirements for the implementation of an effective pretreatment program pursuant to Sections 2233 and 2235.3, Title 23, of the California Code of Regulations.

VIII. PUBLIC PARTICIPATION

The Regional Water Board will be considering the adoption of waste discharge requirements (WDRs) for the City of Anaheim's Water Recycling Demonstration Project. As a step in the WDR adoption process, the Regional Water Board staff has developed tentative WDRs. The Regional Water Board encourages public participation in the WDR adoption process.

A. Notification of Interested Parties

The Regional Water Board staff has notified the Discharger and interested agencies and persons of the Board's intent to prescribe waste discharge requirements for the discharges and has provided them with an opportunity to submit their written comments and recommendations. Notification was provided through mailings and at the Regional Water Board website: http://www.waterboards.ca.gov/santaana.

B. Written Comments

The staff determinations are tentative. Interested persons are invited to submit written comments concerning these tentative WDRs. .

To be fully responded to by staff and considered by the Regional Water Board, written comments should be received at the Regional Water Board offices by 5:00 p.m. on May 17, 2013.

Julio Lara (julio.lara@waterboards.ca.gov)
California Regional Water Quality Control Board
Santa Ana Region
3737 Main Street, Suite 500
Riverside, CA 92501-3348

C. Public Hearing

The Regional Water Board will hold a public hearing on the tentative WDRs during its regular Board meeting on the following date and time and at the following location:

Date:	June 7, 2013
Time:	9:00 A.M.
Location:	City of Loma Linda's City Council Chambers 25541 Barton Rd. Loma Linda, CA 92354

Interested persons are invited to attend. At the public hearing, the Regional Water Board will hear testimony, if any, pertinent to the discharge, WDRs, and permit. Oral testimony will be heard; however, for accuracy of the record, important testimony should be in writing.

Please be aware that dates and venues may change. Our web address, where you can access the current agenda for changes in dates and locations is: http://www.waterboards.ca.gov/santaana.

D. Waste Discharge Requirements Petitions

Any aggrieved person may petition the State Water Board to review the decision of the Regional Water Board regarding the final WDRs. The petition must be submitted within 30 days of the Regional Water Board's action to the following address:

State Water Resources Control Board
Office of Chief Counsel
P.O. Box 100, 1001 I Street
Sacramento, CA 95812-0100

E. Information and Copying

The Report of Waste Discharge (RWD), related documents, tentative effluent limitations and special provisions, comments received, and other information are on file and may be inspected at the address above at any time between 9:00 a.m. and 3:00 p.m. Monday through Friday. Copying of documents may be arranged through the Regional Water Board by calling (951) 782-4901.

F. Register of Interested Persons

Any person interested in being placed on the mailing list for information regarding the WDRs and NPDES permit should contact the Regional Water Board, reference this facility, and provide a name, address, and phone number.

G. Additional Information

Requests for additional information or questions regarding this Order should be directed to Julio Lara at (951) 782-4901.