California Regional Water Quality Control Board
Santa Ana Region

April 24, 2009

UPDATE TO THE AGENDA

(Prepared 4-16-09)

The following item has been postponed:

*7. **Renewal of Waste Discharge Requirements for Eastern Municipal Water District, Riverside County (NPDES No. CA8000188)** - Discharge of approximately 52.5 million gallons per day of tertiary treated wastewater to Temescal Creek.
{Jun Martirez 951\782-3258 jmartirez@waterboards.ca.gov} Order No. R8-2009-0014

California Regional Water Quality Control Board
Santa Ana Region

April 24, 2009

ITEM: **7***

SUBJECT: Renewal of Waste Discharge Requirements for Eastern Municipal Water District's Region-Wide Water Recycling System to Temescal Creek, Order No. R8-2009-0014, NPDES No. CA8000188, Riverside County

DISCUSSION:

See attached Fact Sheet

RECOMMENDATIONS:

Adopt Order No. R8-2009-0014, NPDES No. CA8000188 as presented.

COMMENT SOLICITATION:

Comments were solicited from the discharger and the following agencies:

U.S. Environmental Protection Agency, Permits Issuance Section (WTR-5) - Doug Eberhardt
U.S. Army District, Los Angeles, Corps of Engineers - Regulatory Branch
U.S. Fish and Wildlife Service, Carlsbad – Christine Medak
State Water Resources Control Board, Office of the Chief Counsel – David Rice
State Water Resources Control Board, Division of Water Quality – Phil Isorena
State Department of Water Resources, Glendale – Charles Keene
State Department of Fish and Game, Los Alamitos - Ms. Latonio
State Department of Health Services - San Diego – Steve Williams
Regional Water Quality Control Board, San Diego Region – Charles Cheng
Riverside County Environmental Health Services – Sandy Bunchek
Riverside County Flood Control and Water Conservation District – Jason Uhley
Santa Ana River Discharger's Association - Ed Filadelfia
Santa Ana Watershed Project Authority – Celeste Cantu
Inland Empire Waterkeeper – Lee Reeder
Eastern Municipal Water District - Anthony Pack
Rancho California Water District - Manager
Law Office of Thomas E. Luebben - James K. Hansen
Orange County Coastkeeper – Garry Brown
Orange County Water District – Nira Yamachika
Lawyers for Clean Water C/c San Francisco Baykeeper
Natural Resources Defense Council- David Beckman

CALIFORNIA REGIONAL WATER QUALITY CONTROL BOARD
SANTA ANA REGION

3737 Main Street, Suite 500, Riverside, California 92501-3348
Phone (951) 782-4130 - FAX (951) 781-6288– TDD (951) 782-3221

http://www.waterboards.ca.gov/santaana

ORDER NO. R8-2009-0014
NPDES NO. CA8000188

WASTE DISCHARGE REQUIREMENTS FOR EASTERN MUNICIPAL WATER DISTRICT REGIONWIDE WATER RECYCLING SYSTEM TEMESCAL CREEK DISCHARGE RIVERSIDE COUNTY

The following Discharger is subject to waste discharge requirements as set forth in this Order:

Table 1. Discharger Information

Discharger/ Operator	Eastern Municipal Water District (EMWD)					EMWD/ Rancho California Water District
Name of Facility	Regionwide Water Recycling System-Temescal Creek Discharge					
	San Jacinto Valley RWRF[1]	Moreno Valley RWRF	Perris Valley RWRF	Sun City RWRF	Temecula Valley[2] RWRF	Santa Rosa Water Reclamation Facility[2]
Facility Address	770 North Sanderson Avenue	17140 Kitching Street	1301 Case Road	29285 Valley Blvd.	42565 Avenida Alvarado	26266 Washington Ave,
	San Jacinto, CA 92583	Moreno Valley, CA 92553	Perris, CA 92583	Sun City, CA 92586	Temecula, CA 92590	Murrieta, CA 92562
	Riverside County					
The U.S. Environmental Protection Agency (USEPA) and the Regional Water Quality Control Board have classified this discharge as a major discharge.						

[1] *RWRF means Regional Water Reclamation Facility.*

[2] *Temecula Valley RWRF and Santa Rosa Water Reclamation Facility are also regulated by the San Diego Regional Water Quality Control Board.*

The discharge by Eastern Municipal Water District (hereinafter Discharger) from the discharge points identified below is subject to waste discharge requirements as set forth in this Order:

Table 2. Discharge Locations

Discharge Point	Effluent Description	Discharge Point Latitude	Discharge Point Longitude	Receiving Water
001	Tertiary or secondary treated effluent	33°40'52"N	117°19'54"W	Primary discharge point is approximately 40 feet upstream of confluence of Wasson Canyon flood control channel and Reach 5 of Temescal Creek
S-01	Stormwater from San Jacinto Valley	33° 47' 59" N	117° 00' 26" W	San Jacinto River
S-02		33° 47' 59" N	117° 00' 55" W	
S-03	Stormwater from Moreno Valley	33° 52' 22" N	117° 12' 49" W	San Jacinto River
S-04		33° 52' 18" N	117° 13' 02" W	
S-05		33° 52' 15" N	117° 13' 02" W	
S-06		33° 52' 06" N	117° 13' 02" W	
S-07	Stormwater from Sun City	33° 41' 45" N	117° 12' 34" W	Salt Creek
S-08		33° 41' 42" N	117° 12' 37" W	
S-09		33° 41' 40" N	117° 12' 39" W	
S-10		33° 41' 42" N	117° 12' 39" W	
S-11		33° 41' 45" N	117° 12' 34" W	
S-12	Stormwater from Perris Valley	33° 45' 26" N	117° 11' 43" W	San Jacinto River

Table 3. Administrative Information

This Order was adopted by the Regional Water Quality Control Board on:	April 24, 2009
This Order shall become effective on:	May 1, 2009
This Order shall expire on:	April 30, 2014
The Discharger shall file a Report of Waste Discharge in accordance with title 23, California Code of Regulations, as application for issuance of new waste discharge requirements no later than:	November 1, 2013

IT IS HEREBY ORDERED, that this Order supercedes Order No. R8-2004-0065 as amended by Order No. R8-2005-0078 except for enforcement purposes, and, in order to meet the provisions contained in division 7 of the Water Code (commencing with section 13000) and regulations adopted thereunder, and the provisions of the federal Clean Water Act (CWA) and regulations and guidelines adopted thereunder, the Discharger shall comply with the requirements in this Order.

I, Gerard J. Thibeault, Executive Officer, do hereby certify that this Order with all attachments is a full, true, and correct copy of an Order adopted by the California Regional Water Quality Control Board, Santa Ana Region, on April 24, 2009.

TENTATIVE

_____

Gerard J. Thibeault, Executive Officer

Table of Contents

I. Facility Information 6
II. Findings 7
III. Discharge Prohibitions 13
IV. Effluent Limitations and Discharge Specifications 14
A. Effluent Limitations – Discharge Point 001 14
1. Effluent Limitations without 20:1 dilution in the receiving water– Discharge Point 001 14
2. Interim Effluent Limitations – Not Applicable 17
3. Toxicity Requirements/Discharge Specifications 17
4. Effluent Limitations - DP 001 Under Conditions of 20:1 or More Dilution 17
B. Land Discharge Specifications – Not Applicable 18
C. Reclamation Specifications – Not Applicable 18
D. Stormwater Discharge Specifications 18
V. Receiving Water Limitations 19
A. Surface Water Limitations 19
B. Groundwater Limitations – Not Applicable 20
VI. Provisions 20
A. Standard Provisions 20
B. Monitoring and Reporting Program (MRP) Requirements 22
C. Special Provisions 22
1. Reopener Provisions 22
2. Special Studies, Technical Reports and Additional Monitoring Requirements 23
3. Best Management Practices and Pollution Prevention 25
4. Construction, Operation and Maintenance Specifications 26
5. Special Provisions for Municipal Facilities (POTWs Only) – Not Applicable 27
6. Other Special Provisions – Not Applicable 27
7. Compliance Schedules – Not Applicable 27
VII. Compliance Determination 27

List of Tables

Table 1. Discharger Information 1
Table 2. Discharge Locations 2
Table 3. Administrative Information 2
Table 4. Facility Information 6
Table 5. Basin Plan Beneficial Uses 10
Table 6. Effluent Limitations without 20:1 Dilution at DP 001 14
Table 7. Effluent Limitations Under 20:1 Dilution at DP 001 18

List of Attachments

Attachment A – Definitions A-1
Attachment B – Map B-1
Attachment C – Flow Schematic C-1
Attachment D – Standard Provisions D-1
Attachment E – Monitoring and Reporting Program E-1
Attachment F – Fact Sheet F-1
Attachment G – EPA PPL Table G-1
Attachment H – ML Table H-1
Attachment I – Triggers for Monitoring Priority Pollutants I-1
Attachment J – Stormwater Pollution Prevention Plan J-1
Attachment K – Stormwater Monitoring and Reporting Requirements K-1

I. FACILITY INFORMATION

Table 4. Facility Information

Discharger/Operator	Eastern Municipal Water District (EMWD)					EMWD/Rancho California Water District
Name of Facility	Regionwide Water Recycling System -Temescal Creek Discharge					
	San Jacinto Valley RWRF[1]	Moreno Valley RWRF	Perris Valley RWRF	Sun City RWRF	Temecula Valley[2] RWRF	Santa Rosa Water Reclamation Facility
Facility Address	770 North Sanderson Avenue	17140 Kitching Street	1301 Case Road	29285 Valley Blvd.	42565 Avenida Alvarado	26266 Washington Ave,
	San Jacinto, CA 92583	Moreno Valley, CA 92553	Perris, CA 92570	Sun City, CA 92586	Temecula, CA 92590	Murrieta, CA 92562
	Riverside County					
Facility Contact, Title and Phone	Jayne Joy, Director of Environment & Regulation Compliance, (951) 928-3777 ext. 6241					
Authorized Person to Sign and Submit Reports	Anthony Pack, General Manager, (951) 928-3777 ext. 6109 Jayne Joy, (951) 928-3777 ext. 6241					
Mailing Address	2270 Trumble Road, Perris, CA 92570					
Billing Address	EMWD, PO BOX 8300, Perris, CA 92572-8300					
Major or Minor Facility	Major					
Type of Facility	POTW					
Threat to Water Quality	1					
Complexity	A					
Pretreatment Program	N[3]					
Reclamation Requirements	N[3]					
Facility Permitted Flow	52.5 million gallons per day (mgd)					

The following Discharger is subject to waste discharge requirements as set forth in this Order:

1 *RWRF means Regional Water Reclamation Facility*

2 *Temecula Valley RWRF and Santa Rosa WRF are regulated by the San Diego Regional Water Quality Control Board.*

3 *Waste Discharge Requirements Order No. R8-2008-0008 issued to the Discharger for discharges to land from its five regional water reclamation facilities include reclamation and pretreatment requirements.*

II. FINDINGS

The California Regional Water Quality Control Board, Santa Ana Region (hereinafter Regional Water Board), finds:

A. Background. The Eastern Municipal Water District (hereinafter Discharger, or EMWD) is currently discharging pursuant to Order No. R8-2004-0065 and National Pollutant Discharge Elimination System (NPDES) Permit No. CA8000188. Order No. R8-2004-0065 was amended by Order No. R8-2005-0078. The Discharger submitted a Report of Waste Discharge (ROWD), dated December 26, 2008, and applied for a NPDES permit renewal to discharge up to a monthly average of 52.5 million gallons per day (mgd) and up to a daily maximum of 58 mgd[1] of treated wastewater from its regionwide water recycling system (hereinafter Facility).

For the purposes of this Order, references to the "discharger" or "permittee" in applicable federal and state laws, regulations, plans, or policy are held to be equivalent to references to the Discharger herein.

B. Facility Description. The Discharger owns and operates the regionwide water recycling system. The wastewater treatment systems consist of primary, secondary, and tertiary treatment. Treated wastewater is discharged from DP 001 to Reach 5 of Temescal Creek, a tributary to Reach 3 of Santa Ana River, which is within the Prado Basin Management Zone (PBMZ). Both Temescal Creek and the Santa Ana River are waters of the United States. Neither Temescal Creek and Santa Ana River is naturally perennial. In dry weather, the flow in these water bodies is comprised predominantly of effluent discharges from municipal wastewater treatment facilities and very little natural flow exists. Attachment B provides a map of the area around the Facility. Attachment C provides flow schematics of the Facility.

C. Legal Authorities. This Order is issued pursuant to section 402 of the federal Clean Water Act (CWA) and implementing regulations adopted by the U.S. Environmental Protection Agency (USEPA) and chapter 5.5, division 7 of the California Water Code (commencing with section 13370). It shall serve as an NPDES permit for point source discharges from this Facility to surface waters. This Order also serves as Waste Discharge Requirements (WDRs) pursuant to article 4, chapter 4, Division 7 of the Water Code (commencing with section 13260).

---

1 *The initial Order (Order No. 93-33) issued to regulate EMWD's discharges to Temescal Creek authorized a discharge volume of 58mgd.*

D. Background and Rationale for Requirements. The Regional Water Board developed the requirements in this Order based on information submitted as part of the application, through monitoring and reporting programs, and other available information. The Fact Sheet (Attachment F), which contains background information and rationale for Order requirements, is hereby incorporated into this Order and constitutes part of the Findings for this Order. Attachments A through E and G through K are also incorporated into this Order.

E. California Environmental Quality Act (CEQA). Under Water Code section 13389, this action to adopt an NPDES permit is exempt from the provisions of CEQA, Public Resources Code section 21000 et seq. (*County of Los Angeles v. California State Water Resources Control Board* (2006) 143 Cal.App.4th 985, mod. (Nov. 6, 2006, B184034) 50 Cal.Rptr.3d 619, 632-636).

F. Technology-based Effluent Limitations. Section 301(b) of the CWA and implementing USEPA permit regulations at section 122.44, title 40 of the Code of Federal Regulations[2], require that permits include conditions meeting applicable technology-based requirements at a minimum, and any more stringent effluent limitations necessary to meet applicable water quality standards. The recycled water discharge authorized by this Order must meet minimum federal technology-based requirements based on Secondary Treatment Standards at Part 133 and/or Best Professional Judgment (BPJ) in accordance with Part 125, section 125.3. A detailed discussion of the technology-based effluent limitations development is included in the Fact Sheet (Attachment F).

G. Water Quality-Based Effluent Limitations. Section 301(b) of the CWA and section 122.44(d) require that permits include limitations more stringent than applicable federal technology-based requirements where necessary to achieve applicable water quality standards. This Order contains requirements, expressed as a technology equivalence requirement, more stringent than secondary treatment requirements. These requirements are necessary to meet applicable water quality standards.

The rationale for these requirements, which consist of tertiary or equivalent treatment requirements and other provisions, is discussed in the Fact Sheet.

[2] *All further statutory references are to title 40 of the Code of Federal Regulations unless otherwise indicated.*

Section 122.44(d)(1)(i) mandates that permits include effluent limitations for all pollutants that are or may be discharged at levels that have the reasonable potential to cause or contribute to an exceedance of a water quality standard, including numeric and narrative objectives within a standard. Where reasonable potential has been established for a pollutant, but there is no numeric criterion or objective for the pollutant, water quality-based effluent limitations (WQBELs) must be established using: (1) USEPA criteria guidance under CWA section 304(a), supplemented where necessary by other relevant information; (2) an indicator parameter for the pollutant of concern; or (3) a calculated numeric water quality criterion, such as a proposed state criterion or policy interpreting the state's narrative criterion, supplemented with other relevant information, as provided in section 122.44(d)(1)(vi).

H. Water Quality Control Plans. The Regional Water Board adopted a revised Water Quality Control Plan for the Santa Ana Region (hereinafter Basin Plan) that became effective on January 24, 1995. The Basin Plan designates beneficial uses, establishes water quality objectives, and contains implementation programs and policies to achieve those objectives for all waters in the Santa Ana Region addressed through the plan. More recently, the Basin Plan was amended significantly to incorporate revised boundaries for groundwater subbasins, now termed "management zones", new nitrate-nitrogen and TDS objectives for the new management zones, and new nitrogen and TDS management strategies applicable to both surface and ground waters.

This Basin Plan Amendment was adopted by the Regional Water Board on January 22, 2004. The State Water Resources Control Board (State Water Board) and Office of Administrative Law (OAL) approved the Amendment on September 30, 2004 and December 23, 2004, respectively. EPA approved the surface water standards components of the N/TDS Amendment on June 20, 2007.

In addition, the Basin Plan implements State Water Resources Control Board (State Water Board) Resolution No. 88-63, which established State policy that all waters, with certain exceptions, should be considered suitable or potentially suitable for municipal or domestic supply. Based on the criteria specified in the State Water Board Resolution, the Basin Plan specifies that Temescal Creek and certain reaches of the Santa Ana River, including Reach 3 and downstream reaches, are excepted from the municipal and domestic supply beneficial use. As discussed in detail in the Fact Sheet (Attachment F), beneficial uses applicable to the Prado Basin Management Zone, Temescal Creek, and Reach 3 of the Santa Ana River are as follows:

Table 5. Basin Plan Beneficial Uses

Discharge Point	Receiving Water Name	Beneficial Uses
001	Reach 5 of Temescal Creek	Present or Potential: Agricultural supply, groundwater recharge, water contact recreation, non-contact water recreation, warm freshwater habitat, wildlife habitat, and rare, threatened or endangered species. Excepted from Municipal and Domestic Supply.
	Reach 3 of Santa Ana River and downstream reaches	Present or Potential: Agricultural supply, groundwater recharge, water contact recreation, non-contact water recreation, warm freshwater habitat, wildlife habitat, and rare, threatened or endangered species. Excepted from Municipal and Domestic Supply.
	Prado Basin Management Zone	Present or Potential: Warm freshwater habitat; wildlife habitat, Water contact[3] recreation and non-contact water recreation. Excepted from Municipal and Domestic Supply
	Elsinore and down stream groundwater management zones	Present or Potential: Municipal water supply, Agricultural supply, industrial process supply, Industrial service supply
S-01 to S-12	San Jacinto Watershed	Present or Potential, intermittent beneficial uses: Agricultural supply, groundwater recharge, water contact recreation, non-contact water recreation, warm freshwater habitat, wildlife habitat

Requirements of this Order implement the Basin Plan.

I. **National Toxics Rule (NTR) and California Toxics Rule (CTR).** USEPA adopted the NTR on December 22, 1992, and later amended it on May 4, 1995 and November 9, 1999. About forty criteria in the NTR applied in California. On May 18, 2000, USEPA adopted the CTR. The CTR promulgated new toxics criteria for California and, in addition, incorporated the previously adopted NTR criteria that were applicable in the state. The CTR was amended on February 13, 2001. These rules contain water quality criteria for priority pollutants.

J. **State Implementation Policy.** On March 2, 2000, the State Water Board adopted the *Policy for Implementation of Toxics Standards for Inland Surface Waters, Enclosed Bays, and Estuaries of California* (State Implementation Policy or SIP). The SIP became effective on April 28, 2000 with respect to the priority pollutant criteria promulgated for California by the USEPA through the NTR and to the priority pollutant objectives established by the Regional Water Board in the Basin Plan. The SIP became effective on May 18, 2000 with respect to the priority pollutant criteria promulgated by the USEPA through the CTR. The State Water Board adopted amendments to the SIP on February 24, 2005 that became effective on July 13, 2005. The SIP establishes implementation provisions for priority pollutant criteria and objectives and provisions for chronic toxicity control. Requirements of this Order implement the SIP.

K. **Compliance Schedules and Interim Requirements – Not Applicable**

[3] *Access prohibited in some areas by Riverside County Flood Control.*

L. Alaska Rule. On March 30, 2000, USEPA revised its regulation that specifies when new and revised state and tribal water quality standards (WQS) become effective for CWA purposes. (40 C.F.R. section 131.21; 65 Fed. Reg. 24641 (April 27, 2000).) Under the revised regulation (also known as the Alaska rule), new and revised standards submitted to USEPA after May 30, 2000, must be approved by USEPA before being used for CWA purposes. The final rule also provides that standards already in effect and submitted to USEPA by May 30, 2000 may be used for CWA purposes, whether or not approved by USEPA.

M. Stringency of Requirements for Individual Pollutants. This Order contains both technology-based and water quality based effluent limitations for individual pollutants. The technology-based effluent limitations consist of restrictions on BOD_5 and Suspended Solids. Restrictions on the same pollutants are discussed in Section IV.B.2. of Attachment F. This Order's technology-based pollutant restrictions implement the minimum, applicable federal technology-based requirements. In addition, this Order contains effluent limitations more stringent than the minimum, federal technology-based requirements that are necessary to meet water quality standards. These limitations are not more stringent than required by the CWA.

Water quality-based effluent limitations have been scientifically derived to implement water quality objectives that protect beneficial uses. Both the beneficial uses and the water quality objectives have been approved pursuant to federal law and are the applicable federal water quality standards. To the extent that toxic pollutant water quality-based effluent limitations were derived from the CTR, the CTR is the applicable standard pursuant to section 131.38. The scientific procedures for calculating the individual water quality-based effluent limitations for priority pollutants are based on the CTR-SIP, which was approved by USEPA on May 18, 2000. All beneficial uses and water quality objectives contained in the Basin Plan were approved under state law and submitted to and approved by USEPA prior to May 30, 2000. Any water quality objectives and beneficial uses submitted to USEPA prior to May 30, 2000, but not approved by USEPA before that date, are nonetheless "applicable water quality standards for purposes of the CWA" pursuant to section 131.21(c)(1).

N. Antidegradation Policy. Section 131.12 requires that the state water quality standards include an antidegradation policy consistent with the federal policy. The State Water Board established California's antidegradation policy in State Water Board Resolution No. 68-16. Resolution No. 68-16 incorporates the federal antidegradation policy where the federal policy applies under federal law. Resolution No. 68-16 requires that existing quality of waters be maintained unless degradation is justified based on specific findings. The Regional Water Board's Basin Plan implements, and incorporates by reference, both the state and federal antidegradation policies. As discussed in the Fact Sheet, discharges in accordance with the terms and conditions of this Order will not result in a lowering of water quality. Therefore, the permitted discharge is consistent with the antidegradation provisions of section 131.12 and State Water Board Resolution No. 68-16.

O. Anti-Backsliding Requirements. Sections 402(o)(2) and 303(d)(4) of the CWA and federal regulations at title 40, Code of Federal Regulations section 122.44(l) prohibit backsliding in NPDES permits. These anti-backsliding provisions require effluent limitations in a reissued permit to be as stringent as those in the previous permit. With the exception of the average monthly limitation for free cyanide, all effluent limitations in this Order are at least as stringent as the effluent limitations in the previous Order and are consistent with the anti-backsliding requirements of the CWA and federal regulations and Amendment of Basin Plan. As discussed in the Fact Sheet, the free cyanide limitations in this Order were recalculated using monitoring data not available for application in developing effluent limits in the prior Order. The recalculated average monthly limit for free cyanide is less stringent than that in the prior Order, while the maximum daily limit is more stringent. The less stringent average monthly free cyanide limitation is permissible pursuant to the provisions of CWA section 303(d)(4)(a). Further, the Aluminum limitations included in the prior Order were deleted in this Order in accordance with CWA section 303(d)(4)(a) (see detailed discussion in Attachment F section IV.C.3.b.) Furthermore, pursuant to Section 402(o)(2)(B)(ii) of the CWA, the limit for total recoverable mercury is revised in this Order (see discussion in Attachment F section IV.E.1.c.).

P. Endangered Species Act. This Order does not authorize any act that results in the taking of a threatened or endangered species or any act that is now prohibited, or becomes prohibited in the future, under either the California Endangered Species Act (Fish and Game Code sections 2050 to 2097) or the Federal Endangered Species Act (16 U.S.C.A. sections 1531 to 1544). This Order requires compliance with effluent limits, receiving water limits, and other requirements to protect the beneficial uses of waters of the state. The Discharger is responsible for meeting all requirements of the applicable Endangered Species Act.

Q. Monitoring and Reporting. Section 122.48 requires that all NPDES permits specify requirements for recording and reporting monitoring results. Water Code sections 13267 and 13383 authorizes the Regional Water Board to require technical and monitoring reports. The Monitoring and Reporting Program establishes monitoring and reporting requirements to implement federal and State requirements. This Monitoring and Reporting Program is provided in Attachment E.

R. Pretreatment: Not Applicable. Pretreatment requirements and monitoring and reporting requirements are specified in Order No. R8-2008-0008, R9-2000-165, and Order No. R9-94-92, as amended

S. Biosolids Requirements. On February 19, 1993, the USEPA issued a final rule for the use and disposal of sewage sludge, 40 CFR, Part 503. This rule requires that producers of sewage sludge meet certain reporting, handling, and disposal requirements. The State of California has not been delegated the authority to implement this program, therefore, the U.S. Environmental Protection Agency is the implementing agency.

T. Standard and Special Provisions. Standard Provisions, which apply to all NPDES permits in accordance with section 122.41, and additional conditions applicable to specified categories of permits in accordance with section 122.42, are provided in Attachment D. The Discharger must comply with all standard provisions and with those additional conditions that are applicable under section 122.42. The Regional Water Board has also included in this Order special provisions applicable to the Discharger. A rationale for the special provisions contained in this Order is provided in the attached Fact Sheet.

U. Total Dissolved Solids and Total Inorganic Nitrogen Offset: The amended Basin Plan includes wasteload allocations for discharges of total dissolved solids (TDS) and total inorganic nitrogen (TIN) to Temescal Creek and the Santa Ana River system. The Basin Plan recognizes that strict compliance with TDS/TIN limits may be difficult to achieve and it describes the regulatory approach the Regional Board uses to address such situations. The Board incorporates offset provisions in waste discharge requirements whereby Dischargers can implement an approved program to offset TDS/TIN discharges in excess of specified TDS/TIN limits, provided, in the case of TDS, that the Discharger makes all reasonable efforts to improve the TDS quality of the water supply (and thereby, the wastewater). The Discharger may be unable to comply with the TDS/TIN effluent limitations on a continuous basis. This Order requires the Discharger to submit a proposed offset program and schedule of implementation for approval by the Executive Officer (see Provisions VI.C.2.c.).

V. Notification of Interested Parties. The Regional Water Board has notified the Discharger and interested agencies and persons of its intent to prescribe Waste Discharge Requirements for the discharge and has provided them with an opportunity to submit their written comments and recommendations. Details of notification are provided in the Fact Sheet of this Order.

W. Consideration of Public Comment. The Regional Water Board, in a public meeting, heard and considered all comments pertaining to the discharge. Details of the Public Hearing are provided in the Fact Sheet of this Order.

III. DISCHARGE PROHIBITIONS

A. Wastewater discharged at DP 001 shall be limited to treated and disinfected effluent that meets the conditions in Section IV.A.1., except for discharges of treated wastewater that meets the conditions specified in Section IV.A.4. when the flow[4] in Temescal Creek results in a dilution of 20:1 or more at the point of discharge.

B. The direct discharge of secondary treated wastewater to Temescal Creek other than when the flow[3]in the Creek results in a dilution of 20:1 or more at the point of discharge is prohibited.

---

4 *Exclusive of discharges to surface waters from upstream publicly owned treatment works.*

C. Discharge of wastewater at a location or in a manner different from those described in this Order is prohibited.

D. The bypass or overflow of untreated wastewater or wastes to surface waters or surface water drainage courses is prohibited, except as allowed in Standard Provision I.G. of Attachment D, Federal Standard Provisions.

E. The discharge of any substances in concentrations toxic to animal or plant life is prohibited.

F. The discharge of any radiological, chemical, or biological warfare agent or high level radiological waste is prohibited.

IV. EFFLUENT LIMITATIONS AND DISCHARGE SPECIFICATIONS

A. Effluent Limitations – Discharge Point 001

Unless otherwise specifically specified hereinafter, compliance with the following effluent limitations, except IV.A.1.e., is measured at monitoring location M-001 as described in the attached MRP (Attachment E).

1. Effluent Limitations without 20:1 dilution in the receiving water– Discharge Point 001

a. The Discharge shall maintain compliance with the following effluent limitations at Discharge Point 001:

Table 6. Effluent Limitations without 20:1 Dilution at DP 001

Parameter	Units	Effluent Limitations				
		Average Monthly	Average Weekly	Maximum Daily	Instantaneous Minimum	Instantaneous Maximum
Biochemical Oxygen Demand 5-day @ 20°C	mg/L	20	30	--	--	--
Total Suspended Solids	mg/L	20	30	--	--	--
Ammonia-Nitrogen	mg/L	4.5	--	--	--	--
Free Cyanide	µg/L	4.7	--	7.2	--	--
Total Recoverable Selenium	µg/L	4.1		8.2		
Total Recoverable Mercury	µg/L	0.051		0.103		
Dichlorobromomethane	µg/L	46		87		
Total Chlorine Residual[5]	mg/L					0.1

[5] *See Section VII.M. – Compliance Determination.*

b. Percent Removal: The average monthly percent removal of BOD 5-day 20°C and total suspended solids shall not be less than 85 percent.

c. TDS Limitations - The lower of the two total dissolved solids (TDS) limits specified in (1) or (2), below, is the limit.

(1) The 12-month flow weighted running average[6] TDS constituent concentrations and mass emission rates[7] shall not exceed 650 mg/L and 233,103 lbs per day, respectively, unless:

(a) The Discharger demonstrates to the satisfaction of the Regional Board's Executive Officer that:

i. Discharges in excess of the TDS limits are due to the quality of water supply sources utilized in the discharger's service area, and that all reasonable steps, as agreed upon by the Executive Officer, have been taken to ensure that the best quality supplies are obtained and utilized in the Discharger's service area; or

ii. Discharges in excess of the TDS limits are due solely to chemical additions in the treatment process needed to meet waste discharge requirements, and the discharger has taken all steps to optimize chemical additions so as to minimize the increases; and

(b) The Discharger implements a plan, with the approval of the Executive Officer, to offset discharges in excess of the TDS limits. See Section VI.C.2.c., below.

(2) The 12-month flow weighted running average[5] total dissolved solids concentration of the wastewater shall not exceed the 12-month flow weighted average total dissolved solids concentration of the water supply plus a 250 mg/L increment, unless:

(a) The Discharger demonstrates to the satisfaction of the Regional Board's Executive Officer that TDS discharges in excess of the 250 mg/L mineral increment are due solely to chemical additions in the treatment process needed to meet waste discharge requirements, and the Discharger has taken all steps to optimize chemical additions so as to minimize the TDS increases; and

---

[6] *See Section VII.H. – Compliance Determination.*

[7] *Based on waste load allocation volume of 43 mgd and constituent concentration limit.*

(b) The Discharger complies with the offset provisions in paragraph A.1.c. (1)(b) above, to offset TDS discharges in excess of the 250 mg/L mineral increment, or implements a plan, with the approval of the Executive Officer, to offset such discharges.

d. Total Inorganic Nitrogen (TIN) Limitations: The 12-month flow weighted running average TIN constituent concentrations and mass emission rates[6] shall not exceed 10 mg/L and 3,586 lbs/day, respectively unless the Discharger implements a plan, with the approval of the Executive Officer, to offset TIN discharges in excess of the TIN limits. See Section VI.C.2.c, below.

e. The discharge shall at all times be adequately oxidized, filtered, and disinfected treated wastewater and shall meet the following limitations measured at monitoring locations M-002 to M-007 as described in Attachment E.

(1) The turbidity of the filtered wastewater shall not exceed any of the following:

(a) Average of 2 Nephelometric Turbidity Unit (NTU) within any 24-hour period;

(b) 5 NTU more than 5 percent of the time in any 24-hour period; and

(c) 10 NTU at any time.

(2) The disinfected effluent shall meet the following:

(a) When chlorine disinfection process is utilized following filtration, a CT (the product of total chlorine residual and modal contact time measured at the same point) value of not less than 450 milligram-minutes per liter at all times with a modal contact time of at least 90 minutes[8], based on peak dry weather design flow[9;] shall be provided[10].

---

[8] *The modal contact time requirement is applicable only to the use of recycled water and not to surface water discharges, provided the receiving water provides a 1:1 dilution. The receiving water considered here shall exclude upstream POTW effluent flow.*

[9] *"Peak Dry Weather Flow" means the arithmetic mean of the maximum peak flow rates sustained over some period of time (for example three hours) during the maximum 24-hour dry weather period. Dry weather period is defined as period of little or no rainfall.*

[10] *Modal contact time and CT shall be calculated based on the minimum one-hour average value in a 24-hr period.*

(b) When a disinfection process combined with the filtration process is utilized, the combined process shall demonstrate[11] inactivation and/or removal of 99.999 percent of the plaque-forming units of F-specific bacteriophage MS-2[12], or polio virus in the wastewater. A virus that is at least as resistant to disinfection as polio virus may be used for purposes of the demonstration.

(c) The weekly average concentration of total coliform bacteria shall not exceed a Most Probable Number (MPN) of 2.2 total coliform bacteria per 100 milliliters (ml). (see Compliance Determination VII.J.1., below)

(d) The number of total coliform bacteria shall not exceed an MPN of 23 total coliform bacteria per 100 ml in more than one sample in any 30-day period.

(e) No total coliform bacteria sample shall exceed an MPN of 240 total coliform bacteria per 100 ml.

f. There shall be no visible oil and grease in the discharge.

g. The pH of the discharge shall be within 6.5 to 8.5 pH[13].

2. Interim Effluent Limitations – Not Applicable

3. Toxicity Requirements/Discharge Specifications

a. There shall be no acute or chronic toxicity in the plant effluent nor shall the plant effluent cause any acute or chronic toxicity in the receiving water. All waters shall be maintained free of toxic substances in concentrations which are toxic to, or which produce detrimental physiological responses in human, plant, animal, or indigenous aquatic life. This Order contains no numeric limitation for toxicity. However, the Discharger shall conduct chronic toxicity monitoring.

b. The Discharger shall implement the accelerated monitoring as specified in Attachment E when the result of any single chronic toxicity test of the effluent exceeds 1.0 TUc.

4. Effluent Limitations - DP 001 Under Conditions of 20:1 or More Dilution

a. The discharge of treated and disinfected effluent when the creek flow[14] at monitoring location R-001U in Temescal Creek results in a dilution of 20:1 (receiving water flow : wastewater flow) or more at DP 001 shall maintain compliance with the following effluent limitations:

---

[11] *Meeting the discharge limits in A.1.e.(2).(c),(d), and (e) shall constitute the demonstration required by this sub-paragraph.*

[12] *F-Specific bacteriophage MS-2 means a strain of a specific type of virus that infects coliform bacteria that is traceable to the American Type Culture Collection (ATCC) 15597B1) and is grown on lawns of E. coli (ATCC 15597).*

[13] *See Section VII.K. Compliance Determination.*

[14] *Exclusive of discharges to surface waters from upstream publicly owned treatment works.*

Table 7. Effluent Limitations Under 20:1 Dilution at DP 001

Parameter	Units	Effluent Limitations			
		Average Monthly	Average Weekly	Instantaneous Minimum	Instantaneous Maximum
Biochemical Oxygen Demand 5-day @ 20°C	mg/L	30	45	- -	- -
Total Suspended Solids	mg/L	30	45	- -	- -
Total Residual Chlorine	mg/L	-	-	-	2.1

b. Treated wastewater shall at all times be adequately oxidized and disinfected wastewater and shall meet the following limitations:

(1) The weekly average number of coliform bacteria does not exceed a median of 23 per 100 milliliters as determined from the daily coliform bacteria values for the last seven (7) days. (see also Compliance Determination VII.J.2., below)

(2) The discharge shall be considered adequately oxidized if the 5-day @ 20°C Biochemical Oxygen Demand and Total Suspended Solids constituent concentrations of the discharge are less than or equal to the limitations shown in IV.A.4.a., above.

c. The monthly average biochemical oxygen demand and suspended solids concentrations of the discharge shall not be greater than fifteen percent (15%) of the monthly average influent concentration.

d. The pH of the discharge shall be within 6.5 to 8.5 pH[15].

B. Land Discharge Specifications – Not Applicable

C. Reclamation Specifications – Not Applicable

D. Stormwater Discharge Specifications

1. Storm water[16] discharges shall not:

a. Cause or contribute to a violation of any applicable water quality standards contained in the Basin Plan, or in the State or Federal regulations.

b. Cause or threaten to cause pollution, contamination, or nuisance.

---

15 *See Section VII.K. Compliance Determination*

16 *Storm water means storm water runoff and surface runoff and drainage.*

c. Contain a hazardous substance equal to or in excess of a reportable quantity listed in 40 CFR Part 117 and/or 40 CFR Part 302.

d. Adversely impact human health or the environment.

e. Result in noncompliance with the lawful requirements of municipalities, counties, drainage districts, and other local agencies on storm water discharges into storm drain systems or other courses under their jurisdiction.

2. Stormwater discharges from each RWRF shall comply with the Stormwater Requirements in Attachment J and K.

3. The Discharger must update and implement the Storm Water Pollution Prevention Plan for the Facility in accordance with Attachment J of this Order.

V. RECEIVING WATER LIMITATIONS

A. Surface Water Limitations

1. Receiving water limitations are based upon water quality objectives contained in the Basin Plan. As such, they are a required part of this Order. The discharge shall not cause the following in Reach 5 of Temescal Creek and downstream reaches:

a. Coloration of the receiving waters, which causes a nuisance or adversely affects beneficial uses.

b. Deposition of oil, grease, wax or other materials in the receiving waters in concentrations which result in a visible film or in coating objects in the water, or which cause a nuisance or affect beneficial uses.

c. An increase in the amounts of suspended or settleable solids in the receiving waters, which will cause a nuisance or adversely affect beneficial uses as a result of controllable water quality factors.

d. Taste or odor-producing substances in the receiving waters at concentrations, which cause a nuisance or adversely affect beneficial uses.

e. The presence of radioactive materials in the receiving waters in concentrations, which are deleterious to human, plant or animal life.

f. The depletion of the dissolved oxygen concentration below 5.0 mg/L.

g. The temperature of the receiving waters to be raised above 90°F (32°C) during the period of June through October, or above 78°F (26°C) during the rest of the year.

h. The concentration of pollutants in the water column, sediments, or biota to adversely affect the beneficial uses of the receiving water. The discharge shall not result in the degradation of inland surface water communities and populations, including vertebrate, invertebrate, and plant species.

2. The discharge of wastes shall not cause a violation of any applicable water quality standards for receiving waters adopted by the Regional Water Board or State Water Board, as required by the Clean Water Act and regulations adopted thereunder.

3. Pollutants not specifically mentioned and limited in this Order shall not be discharged at levels that will bioaccumulate in aquatic resources to levels, which are harmful to human health or animal life.

4. The discharge shall not contain constituent concentrations of mercury that will result in the bioaccumulation of methylmercury in fish flesh tissue greater than 0.3 milligram methylmercury/kilogram. (See also Section VI.C.1.e. and VI.C.2.a., below).

B. Groundwater Limitations – Not Applicable

VI. PROVISIONS

A. Standard Provisions

1. The Discharger shall comply with all Standard Provisions included in Attachment D of this Order.

2. The Discharger shall comply with the following provisions:

   a. Failure to comply with provisions or requirements of this Order, or violation of other applicable laws or regulations governing discharges from this Facility, may subject the Discharger to administrative or civil liabilities, criminal penalties, and/or other enforcement remedies to ensure compliance. Additionally, certain violations may subject the Discharger to civil or criminal enforcement from appropriate local, state, or federal law enforcement entities.

   b. In the event the Discharger does not comply or will be unable to comply for any reason, with any prohibition, discharge limitations (e.g., maximum daily effluent limitation), or receiving water limitation of this Order, the Discharger shall notify the Regional Water Board by telephone (951) 782-4130 within 24 hours of having knowledge of such noncompliance, and shall confirm this notification in the monthly Self-Monitoring Report, unless the Regional Water Board waives confirmation or requires, orally or in writing, a written notification within five business days. The written notification shall state the nature, time, duration, and cause of noncompliance, and shall describe the measures being taken to remedy the current noncompliance and, prevent recurrence including, where applicable, a schedule of implementation. Other noncompliance requires written notification as above at the time of the normal monitoring report.

c. Neither the treatment nor the discharge of pollutants shall create a pollution, contamination, or nuisance as defined by Section 13050 of the CWC.

d. The Discharger shall take all reasonable steps to minimize or correct any adverse impact on the environment resulting from noncompliance with this Order, including such accelerated or additional monitoring as may be necessary to determine the nature and impact of the noncomplying discharge.

e. This Order may be modified, revoked and reissued, or terminated for cause including, but not limited to, the following:

   1) Violation of any terms or conditions of this Order;
   2) Obtaining this Order by misrepresentation or failure to disclose fully all relevant facts, or;
   3) In addition to any other grounds specified herein, this Order may be modified or revoked at any time if, on the basis of any data, the Regional Water Board determines that continued discharges may cause unreasonable degradation of the aquatic environment.

f. If an effluent standard or discharge prohibition (including any schedule of compliance specified in such effluent standard or prohibition) is established under Section 307 (a) of the Clean Water Act for a toxic pollutant which is present in the discharge, and such standard or prohibition is more stringent than any limitation for that pollutant in this Order, this Order may be modified or revoked and reissued to conform to the effluent standard or discharge prohibition.

g. The Discharger shall file with the Regional Water Board a Report of Waste Discharge at least 180 days before making any material change in the character, location, or volume of the discharge. A material change includes, but is not limited to, the following:

   1) Adding a major industrial waste discharge to a discharge of essentially domestic sewage, or adding a new process or product by an industrial facility resulting in a change in the character of the waste.
   2) Significantly changing the disposal method or location, such as changing the disposal to another drainage area or water body.
   3) Significantly changing the method of treatment.
   4) Increasing the treatment plant design capacity beyond that specified in this Order.

h. The provisions of this Order are severable, and if any provision of this Order, or the application of any provision of this Order to any circumstance, is held invalid, the application of such provision to other circumstances, and the remainder of this Order, shall not be affected thereby.

i. The Discharger shall maintain a copy of this Order at the site so that it is available to site operating personnel at all times. Key operating personnel shall be familiar with its content.

j. The Discharger shall optimize chemical additions needed in the treatment process to meet waste discharge requirements so as to minimize total dissolved solid increases in the treated wastewater.

k. Collected screenings, sludge, and other solids removed from liquid wastes shall be disposed of in a manner approved by the Regional Water Board's Executive Officer.

l. The Discharger has demonstrated a correlation between the biological oxygen demand (BOD_5) and total organic carbon (TOC) concentrations in the effluent to the satisfaction of the Executive Officer. Therefore, compliance with the BOD_5 limits contained in this Order may be determined based on analyses of the TOC of the effluent.

m. In the event of any change in control or ownership of land or waste discharge facility presently owned or controlled by the Discharger, the Discharger shall notify the succeeding owner or operator of the existence of this Order by letter, a copy of which shall be forwarded to the Regional Water Board.

n. The treatment facilities shall be designed, constructed, operated, and maintained to prevent inundation or washout due to floods with a 100-year return frequency.

B. Monitoring and Reporting Program (MRP) Requirements

The Discharger shall comply with the MRP, and future revisions thereto, in Attachment E of this Order. This monitoring and reporting program may be modified by the Executive Officer at any time during the term of this Order, and may include an increase in the number of parameters to be monitored, the frequency of the monitoring or the number and size of samples to be collected. Any increase in the number of parameters to be monitored, the frequency of the monitoring or the number and size of samples to be collected may be reduced back to the levels specified in the original monitoring and reporting program at the discretion of the Executive Officer.

C. Special Provisions

1. Reopener Provisions

a. This Order will be reopened to address any changes in State or federal plans, policies or regulations that would affect the quality requirements for the discharges.

b. This Order may be reopened to include effluent limitations for pollutants determined to be present in the discharge in concentrations that pose a reasonable potential to cause or contribute to violations of water quality objectives.

c. This Order may be reopened and modified in accordance with the requirements set forth at 40 CFR 122 and 124, to include the appropriate conditions or limits to address demonstrated effluent toxicity based on newly available information, or to implement any EPA-approved new State water quality standards applicable to effluent toxicity.

d. This Order may be reopened for modification, or revocation and reissuance, as a result of the detection of a reportable priority pollutant generated by special conditions included in this Order. These special conditions may be, but are not limited to, fish tissue sampling, whole effluent toxicity, monitoring requirements on internal waste stream(s), and monitoring for surrogate parameters. Additional requirements may be included in this Order as a result of the special condition monitoring data.

e. This Order may be reopened to include an appropriate bioaccumulation based effluent limit for mercury if test results (as required in Attachment E of this Order) show that the concentration levels of methylmercury in the fish tissue are at or above 0.3 milligrams per kilogram.

f. This Order may be reopened to incorporate appropriate biosolids requirements if the State Water Resources Control Board and the Regional Water Quality Control Board are given the authority to implement regulations contained in 40 CFR 503.

2. Special Studies, Technical Reports and Additional Monitoring Requirements

a. By June 1, 2009, the Discharger shall notify the Executive Officer of its continuous involvement with the comprehensive mercury investigation program currently being conducted by a group of Santa Ana River system dischargers. If the Discharger discontinues its involvement with this comprehensive program, the Discharger shall, within 60 days of that date, submit for the approval of the Executive Officer its plan for the annual testing of mercury levels in fish flesh samples collected from the Santa Ana River, upstream of, at, and downstream of the point of the discharge point. Upon approval, the Discharger shall implement the plan.

b. Toxicity Reduction Requirements.

1) The Discharger shall develop an Initial Investigation Toxicity Reduction Evaluation (IITRE) work plan that describes the steps the Discharger intends to follow if required by Toxicity Requirements b.(2), below. The work plan shall include at a minimum:

(a) A description of the investigation and evaluation techniques that will be used to identify potential causes/sources of the exceedance, effluent variability, and/or efficiency of the treatment system in removing toxic substances. This shall include a description of an accelerated chronic toxicity testing program.

(b) A description of the methods to be used for investigating and maximizing in-house treatment efficiency and good housekeeping practices.

(c) A description of the evaluation process to be used to determine if implementation of a more detailed TRE\TIE is necessary.

2) The Discharger shall implement the IITRE work plan whenever the results of chronic toxicity tests of the effluent exceed:

a) A two month median value of 1.0 TUc for survival or reproduction endpoint or,
b) Any single test value of 1.7 TUc for survival endpoint.

3) The Discharger shall develop a detailed Toxicity Reduction Evaluation and Toxicity Identification Evaluation (TRE/TIE) work plan that shall describe the steps the Discharger intends to follow if the implemented IITRE fails to identify the cause of, or to rectify, the toxicity.

4) The Discharger shall use as guidance, at a minimum, EPA manuals EPA/600/2-88/070 (industrial), EPA/600/4-89-001A (municipal), EPA/600/6-91/005F (Phase I), EPA/600/R-92/080 (Phase II), and EPA-600/R-92/081 (Phase III) to identify the cause(s) of toxicity. If during the life of this Order the aforementioned EPA manuals are revised or updated, the revised/updated manuals may also be used as guidance. The detailed TRE/TIE work plan shall include:

(a) Further actions to investigate and identify the cause of toxicity;
(b) Actions the Discharger will take to mitigate the impact of the discharge and to prevent the recurrence of toxicity; and
(c) A schedule for these actions.

5) The Discharger shall implement the TRE/TIE workplan if the IITRE fails to identify the cause of, or rectify, the toxicity, or if in the opinion of the Executive Officer the IITRE does not adequately address an identified toxicity problem.

6) The Discharger shall assure that adequate resources are available to implement the required TRE/TIE.

c. TDS/TIN Offset: By January 1, 2010, the Discharger shall submit a proposed offset program and schedule of implementation for approval by the Regional Board Executive Officer. The proposed offset program to be approved by the EO shall include a compliance schedule that assures compliance with effluent limitations and required offsets will be achieved as soon as possible but no later than three years from the date of adoption of this Order. Upon approval, the Discharger shall implement the offset program according to the approved schedule. The offset program shall account for TDS/TIN discharges in excess of the numeric limits specified in this Order that occur from the date of adoption of this Order. Should any of the proposed offset mechanisms be discontinued or prove to be inadequate to provide requisite offset(s), the Discharger shall, no later than 30 days of discontinuance of any of the proposed offset program or finding of its inadequacy, propose an alternative offset program for approval by the Executive Officer. The Discharger shall implement the alternative offset program upon approval by the Executive Officer.

d. By July 1, 2009, the Discharger shall submit, for approval by the Executive Officer, a report that details the manner in which sampling, monitoring and reporting will be performed as required in this Order.

3. Best Management Practices and Pollution Prevention

a. Pollutant Minimization Program

1) The Discharger shall develop and conduct a Pollutant Minimization Program (PMP) as further described below when there is evidence (e.g., sample results reported as DNQ when the effluent limitation is less than the MDL, sample results from analytical methods more sensitive than those methods required by this Order, presence of whole effluent toxicity, health advisories for fish consumption, results of benthic or aquatic organism tissue sampling) that a priority pollutant is present in the effluent above an effluent limitation and either:

(a) A sample result is reported as DNQ and the effluent limitation is less than the RL; or
(b) A sample result is reported as ND and the effluent limitation is less than the MDL.

2) The PMP shall include, but not be limited to, the following actions and submittals acceptable to the Regional Water Board:

(a) An annual review and semi-annual monitoring of potential sources of the reportable priority pollutant(s), which may include fish tissue monitoring and other bio-uptake sampling;

(b) Quarterly monitoring for the reportable priority pollutant(s) in the influent to the wastewater treatment system;

(c) Submittal of a control strategy designed to proceed toward the goal of maintaining concentrations of the reportable priority pollutant(s) in the effluent at or below the effluent limitation;

(d) Implementation of appropriate cost-effective control measures for the reportable priority pollutant(s), consistent with the control strategy; and

(e) An annual status report that shall be sent to the Regional Water Board including:

i. All PMP monitoring results for the previous year;
ii. A list of potential sources of the reportable priority pollutant(s);
iii. A summary of all actions undertaken pursuant to the control strategy; and
iv. A description of actions to be taken in the following year.

4. Construction, Operation and Maintenance Specifications

a. The Discharger's wastewater treatment facilities, including RCWD's SRRF, shall be supervised and operated by persons possessing certificates of appropriate grade pursuant to Title 23, Division 3, Chapter 14, California Code of Regulations.

b. The Discharger shall provide safeguards to assure that should there be reduction, loss, or failure of electric power, the Discharger will comply with the requirements of this Order.

c. The Discharger shall update as necessary, the "Operation and Maintenance Manual (O&M Manual)" which it has developed for the treatment facility to conform to latest plant changes and requirements. The O&M Manual shall be readily available to operating personnel onsite. The O&M Manual shall include the following:

(1) Description of the treatment plant table of organization showing the number of employees, duties and qualifications and plant attendance schedules (daily, weekends and holidays, part-time, etc). The description should include documentation that the personnel are knowledgeable and qualified to operate the treatment facility so as to achieve the required level of treatment at all times.
(2) Detailed description of safe and effective operation and maintenance of treatment processes, process control instrumentation and equipment.
(3) Description of laboratory and quality assurance procedures.
(4) Process and equipment inspection and maintenance schedules.
(5) Description of safeguards to assure that, should there be reduction, loss, or failure of electric power, the Discharger will be able to comply with requirements of this Order.

(6) Description of preventive (fail-safe) and contingency (response and cleanup) plans for controlling accidental discharges, and for minimizing the effect of such events. These plans shall identify the possible sources (such as loading and storage areas, power outage, waste treatment unit failure, process equipment failure, tank and piping failure) of accidental discharges, untreated or partially treated waste bypass, and polluted drainage.

5. Special Provisions for Municipal Facilities (POTWs Only) – Not Applicable

6. Other Special Provisions – Not Applicable

7. Compliance Schedules – Not Applicable

VII. COMPLIANCE DETERMINATION

Compliance with the effluent limitations contained in section IV of this Order will be determined as specified below:

A. General.
Compliance with effluent limitations for priority pollutants shall be determined using sample reporting protocols defined in the MRP and Attachment A of this Order. For purposes of reporting and administrative enforcement by the Regional and State Water Boards, the Discharger shall be deemed out of compliance with effluent limitations if the concentration of the priority pollutant in the monitoring sample is greater than the effluent limitation and greater than or equal to the reporting level (RL).

B. Multiple Sample Data.
When determining compliance with an AMEL or MDEL for priority pollutants and more than one sample result is available, the Discharger shall compute the arithmetic mean unless the data set contains one or more reported determinations of “Detected, but Not Quantified” (DNQ) or “Not Detected” (ND). In those cases, the Discharger shall compute the median in place of the arithmetic mean in accordance with the following procedure:

1. The data set shall be ranked from low to high, ranking the reported ND determinations lowest, DNQ determinations next, followed by quantified values (if any). The order of the individual ND or DNQ determinations is unimportant.

2. The median value of the data set shall be determined. If the data set has an odd number of data points, then the median is the middle value. If the data set has an even number of data points, then the median is the average of the two values around the middle unless one or both of the points are ND or DNQ, in which case the median value shall be the lower of the two data points where DNQ is lower than a value and ND is lower than DNQ.

C. Average Wet-Monthly Effluent Limitation (AMEL).
If the average (or when applicable, the median determined by subsection B above for multiple sample data) of daily discharges over a calendar month exceeds the AMEL for a given parameter, this will represent a single violation, though the Discharger will be considered out of compliance for each day of that month for that parameter (e.g., resulting in 31 days of non-compliance in a 31-day month). If only a single sample is taken during the calendar month and the analytical result for that sample exceeds the AMEL, the Discharger will be considered out of compliance for that calendar month. The Discharger will only be considered out of compliance for days when the discharge occurs. For any one calendar month during which no sample (daily discharge) is taken, no compliance determination can be made for that calendar month.

D. Average Weekly Effluent Limitation (AWEL).
If the average or when applicable, the median determined by subsection B above for multiple sample data of daily discharges over a calendar week exceeds the AWEL for a given parameter, this will represent a single violation, though the Discharger will be considered out of compliance for each day of that week for that parameter, resulting in 7 days of non-compliance. If only a single sample is taken during the calendar week and the analytical result for that sample exceeds the AWEL, the Discharger will be considered out of compliance for that calendar week. The Discharger will only be considered out of compliance for days when the discharge occurs. For any one calendar week during which no sample (daily discharge) is taken, no compliance determination can be made for that calendar week.

E. Maximum Daily Effluent Limitation (MDEL).
If a daily discharge or when applicable, the median determined by subsection B above for multiple sample data of a daily discharge exceeds the MDEL for a given parameter, the Discharger will be considered out of compliance for that parameter for that 1 day only within the reporting period. For any 1 day during which no sample is taken, no compliance determination can be made for that day.

F. Instantaneous Minimum Effluent Limitation.
If the analytical result of a single grab sample is lower than the instantaneous minimum effluent limitation for a parameter, the Discharger will be considered out of compliance for that parameter for that single sample. Non-compliance for each sample will be considered separately (e.g., the results of two grab samples taken within a calendar day that both are lower than the instantaneous minimum effluent limitation would result in two instances of non-compliance with the instantaneous minimum effluent limitation).

G. Instantaneous Maximum Effluent Limitation.
If the analytical result of a single grab sample is higher than the instantaneous maximum effluent limitation for a parameter, the Discharger will be considered out of compliance for that parameter for that single sample. Non-compliance for each sample will be considered separately (e.g., the results of two grab samples taken within a calendar day that both exceed the instantaneous maximum effluent limitation would result in two instances of non-compliance with the instantaneous maximum effluent limitation).

H. 12-Month Flow Weighted Running Average Effluent Limitation.
Compliance with the 12-month flow weighted running average limits under Discharge Specification IV.A.1.c. and IV.A.1.d. shall be determined by the sum of monthly averages[17] divided by the number of months when discharges occur.

I. Turbidity Limitations.
The Discharger shall be considered in compliance with Discharge Specifications IV.A.1.e.(1). if the following conditions are met. If the Discharger is using a properly operating backup turbidimeter, the reading of the backup turbidimeter shall be considered in determining whether there has been an actual noncompliance:

1. There are no excursions above the limits specified in Discharge Specifications IV.A.1.e.(1)(a) and (b);
2. Exceedances of the "10 NTU at any time" turbidity requirement do not exceed a duration of one minute.
3. The apparent exceedance was caused by interference with, or malfunction of, the monitoring instrument.

J. Coliform Organism Effluent Limitations.

1. Compliance with the average weekly total coliform limit expressed in Discharge Specification IV.A.1.e.(2)(c), shall be based on a median of test results from the previous 7 days. To comply with the limit, the 7-day median MPN must not exceed 2.2 per 100 milliliters on any day during the week. However, only one violation is recorded for each calendar week, even if the 7-day median MPN value is greater than 2.2 for more than one day in the week.

K. pH Effluent Limitations.
Pursuant to 40 CFR 401.17, the Discharger shall be in compliance with the pH limitations specified in the Discharge Specification IV.A.1.g., IV.A.4.d., above, provided that both of the following conditions are satisfied:

1. The total time during which the pH values are outside the required range of 6.5-8.5 pH values shall not exceed 7 hours and 26 minutes in any calendar month; and
2. No individual excursion from the range of pH values shall exceed 60 minutes.

L. TDS Increment Limit.
Compliance with Discharge Specifications IV.A.1.c.(2) shall be based on RWRFs (and RCWD Santa Rosa WRF) areawide flow weighted TDS water supply quality and shall be determined from TDS analysis of secondary treated wastewater. The Discharger shall provide the necessary calculations showing the overall TDS water supply quality.

---

[17] *See definition of monthly averages in Attachment A.*

M. Total Chlorine Residual Limitation (TCR)

Compliance determinations for total chlorine residual shall be based on 99% compliance. To determine 99% compliance with the effluent limitation for total chlorine residual, the following conditions shall be satisfied:

1. For TCR Limit specified in Section IV.A.1. :
   a The total time during which the total chlorine residual values are above 0.1 mg/L (instantaneous maximum value) shall not exceed 7 hours and 26 minutes in any calendar month;
   b No individual excursion from 0.1 mg/L value shall exceed 30 minutes; and
   c No individual excursion shall exceed 5.0 mg/L.

2. For TCR Limit specified in Section IV.A.4. :
   a The total time during which the total chlorine residual values are above 2.1 mg/L (instantaneous maximum value) shall not exceed 7 hours and 26 minutes in any calendar month;
   b No individual excursion from 2.1 mg/L value shall exceed 30 minutes; and
   c No individual excursion shall exceed 10.5 mg/L.

N. Priority Pollutants.

The Discharger shall be deemed out of compliance with an effluent limitation if the concentration of the priority pollutant in the monitoring sample is greater than the effluent limitation.

1. Compliance determination shall be based on the reporting level selected from minimum level (ML)[18] specified in Attachment H of this Order, unless an alternative reporting level is approved by the Regional Water Board's Executive Officer. When there is more than one ML value for a given substance, the Discharger shall select the ML value that is below the calculated effluent limitation, and use its associated analytical method, listed in Attachment H of this Order. If no ML value is below the effluent limitation, then the Regional Water Board will select as the reporting level the lowest ML value and its associated analytical method.

2. When determining compliance with an average monthly limit and more than one sample result is available in a month, the Discharger shall compute the arithmetic mean unless the data set contains one or more reported determinations of detected but not quantified (DNQ) or not detected (ND). In those cases, the Discharger shall compute the median in place of the arithmetic mean in accordance with the following procedure:

---

[18] *Minimum level is the concentration at which the entire analytical system must give a recognizable signal and acceptable point. The ML is the concentration in a sample that is equivalent to the concentration of the lowest calibration standard analyzed by a specific analytical procedure, assuming that all the method specified sample weights, volumes, and processing steps have been followed.*

a. The data set shall be ranked from low to high, reported ND determinations lowest, DNQ determinations next, followed by quantified values (if any). The order of the individual ND or DNQ determinations is unimportant.

b. The median value of the data set shall be determined. If the data set has an odd number of data points, then the median is the middle value. If the data set has an even number of data points, then the median is the average of the two values around the middle unless one or both of the points are ND or DNQ, in which case the median value shall be the lower of the two data points where DNQ is lower than a value and ND is lower than DNQ. If a sample result, or the arithmetic mean or median of multiple sample results, is below the reporting level, and there is evidence that the priority pollutant is present in the effluent above an effluent limitation and the Discharger conducts a pollutant minimization program (PMP)[19] the Discharger shall not be deemed out of compliance.

O. Non-Priority Pollutants.

The discharge shall be considered to be in compliance with an effluent limitation that is less than or equal to the method detection limit (MDL) specified in 40 CFR 136 if the arithmetic mean of all test results for the monitoring period is less than the constituent effluent limitation. Analytical results that are less than the specified MDL shall be assigned a value of zero.

P. Compliance Determination

Compliance determinations shall be based on available analyses for the time interval associated with the effluent limitation. Where only one sample analysis is available in a specified time interval (e. g., monthly or weekly average), that sample shall serve to characterize the discharge for the entire interval. If quarterly sample results show noncompliance with the average monthly limit and that sample result is used for compliance determinations for each month of the quarter, then three separate violations of the average monthly limit shall be deemed to have occurred.

Compliance with a single effluent limitation which applies to a group of chemicals (e.g., PCBs), based on a single sample shall be determined by considering the concentrations of individual members of the group to be zero if the analytical response for the individual chemical falls below the method detection limit (MDL) for that chemical.

---

[19] *The goal of the PMP shall be to reduce all potential sources of a priority pollutant(s) through pollutant minimization (control) strategies, including pollution prevention measures as appropriate, to maintain the effluent concentration at or below the water quality-based effluent limitation.*

ATTACHMENT A – DEFINITIONS

Arithmetic Mean (μ), also called the average, is the sum of measured values divided by the number of samples. For ambient water concentrations, the arithmetic mean is calculated as follows:

Arithmetic mean = $\mu = \Sigma x / n$

where: Σx is the sum of the measured ambient water concentrations, and
n is the number of samples.

Average Monthly Effluent Limitation (AMEL): the highest allowable average of daily discharges over a calendar month, calculated as the sum of all daily discharges measured during a calendar month divided by the number of daily discharges measured during that month.

Average Weekly Effluent Limitation (AWEL): the highest allowable average of daily discharges over a calendar week (Sunday through Saturday), calculated as the sum of all daily discharges measured during a calendar week divided by the number of daily discharges measured during that week.

Best Management Practices (BMPs) are methods, measures, or practices designed and selected to reduce or eliminate the discharge of pollutants to surface waters from point and nonpoint source discharges including storm water. BMPs include structural and non-structural controls, and operation and maintenance procedures, which can be applied before, during, and/or after pollution producing activities.

Bioaccumulative pollutants are those substances taken up by an organism from its surrounding medium through gill membranes, epithelial tissue, or from food and subsequently concentrated and retained in the body of the organism.

Carcinogenic pollutants are substances that are known to cause cancer in living organisms.

Daily Discharge: Daily Discharge is defined as either: (1) the total mass of the constituent discharged over the calendar day (12:00 am through 11:59 pm) or any 24-hour period that reasonably represents a calendar day for purposes of sampling (as specified in the permit), for a constituent with limitations expressed in units of mass or; (2) the unweighted arithmetic mean measurement of the constituent over the day for a constituent with limitations expressed in other units of measurement (e.g., concentration).

The daily discharge may be determined by the analytical results of a composite sample taken over the course of one day (a calendar day or other 24-hour period defined as a day) or by the arithmetic mean of analytical results from one or more grab samples taken over the course of the day.

Detected, but Not Quantified (DNQ) are those sample results less than the RL, but greater than or equal to the laboratory's MDL.

Estimated Chemical Concentration is the estimated chemical concentration that results from the confirmed detection of the substance by the analytical method below the ML value.

Existing Discharger means any discharger that is not a new discharger. An existing discharger includes an "increasing discharger" (i.e., an existing facility with treatment systems in place for its current discharge that is or will be expanding, upgrading, or modifying its existing permitted discharge after the effective date of this Policy).

Infeasible means not capable of being accomplished in a successful manner within a reasonable period of time, taking into account economic, environmental, legal, social, and technological factors.

Inland Surface Waters are all surface waters of the State that do not include the ocean, enclosed bays, or estuaries.

Instantaneous Maximum Effluent Limitation: the highest allowable value for any single grab sample or aliquot (i.e., each grab sample or aliquot is independently compared to the instantaneous maximum limitation).

Instantaneous Minimum Effluent Limitation: the lowest allowable value for any single grab sample or aliquot (i.e., each grab sample or aliquot is independently compared to the instantaneous minimum limitation).

Maximum Daily Flow is the maximum flow sample of all samples collected in a calendar day.

Maximum Daily Effluent Limitation (MDEL) means the highest allowable daily discharge of a pollutant, over a calendar day (or 24-hour period). For pollutants with limitations expressed in units of mass, the daily discharge is calculated as the total mass of the pollutant discharged over the day. For pollutants with limitations expressed in other units of measurement, the daily discharge is calculated as the arithmetic mean measurement of the pollutant over the day.

MEC: Maximum Effluent Concentration.

Median is the middle measurement in a set of data. The median of a set of data is found by first arranging the measurements in order of magnitude (either increasing or decreasing order). If the number of measurements (n) is odd, then the median = $X_{(n+1)/2}$. If n is even, then the median = $(X_{n/2} + X_{(n/2)+1})/2$ (i.e., the midpoint between the $n/2$ and $n/2+1$).

Method Detection Limit (MDL) is the minimum concentration of a substance that can be measured and reported with 99 percent confidence that the analyte concentration is greater than zero, as defined in 40 CFR 136, Appendix B, revised as of May 14, 1999.

Monthly Averages is the highest allowable average of daily discharges over a calendar month, calculated as the sum of all daily discharges measured during a calendar month divided by the number of daily discharges measured during that month. For TDS and TIN determination, the monthly averages shall be flow weighted.

Minimum Level (ML) is the concentration at which the entire analytical system must give a recognizable signal and acceptable calibration point. The ML is the concentration in a sample that is equivalent to the concentration of the lowest calibration standard analyzed by a specific analytical procedure, assuming that all the method specified sample weights, volumes, and processing steps have been followed.

Not Detected (ND) are those sample results less than the laboratory's MDL.

Persistent pollutants are substances for which degradation or decomposition in the environment is nonexistent or very slow.

Pollutant Minimization Program (PMP) means waste minimization and pollution prevention actions that include, but are not limited to, product substitution, waste stream recycling, alternative waste management methods, and education of the public and businesses. The goal of the PMP shall be to reduce all potential sources of a priority pollutant(s) through pollutant minimization (control) strategies, including pollution prevention measures as appropriate, to maintain the effluent concentration at or below the water quality-based effluent limitation. Pollution prevention measures may be particularly appropriate for persistent bioaccumulative priority pollutants where there is evidence that beneficial uses are being impacted. The Regional Water Board may consider cost-effectiveness when establishing the requirements of a PMP. The completion and implementation of a Pollution Prevention Plan, if required pursuant to CWC Section 13263.3(d), shall be considered to fulfill the PMP requirements. The following reporting protocols and definitions are used in determining the need to conduct a Pollution Minimization Program (PMP). Reporting protocols in the Monitoring and Reporting Program, Attachment E, Section X.B.4 describe sample results that are to be reported as Detected but Not Quantified (DNQ) or Not Detected (ND). Definitions for a Minimum Level (ML) and Method Detection Limit (MDL) are provided in Attachment A. A Reporting Level (RL) is the ML associated with an analytical method selected by the Discharger that is authorized for monitoring effluent limitations under this Order.

Pollution Prevention means any action that causes a net reduction in the use or generation of a hazardous substance or other pollutant that is discharged into water and includes, but is not limited to, input change, operational improvement, production process change, and product reformulation (as defined in Water Code Section 13263.3). Pollution prevention does not include actions that merely shift a pollutant in wastewater from one environmental medium to another environmental medium, unless clear environmental benefits of such an approach are identified to the satisfaction of the SWRCB or RWQCB.

Process Optimization means minor changes to the existing facility and treatment plant operations that optimize the effectiveness of the existing treatment processes.

Public Entity includes the federal government or a state, county, city and county, city, district, public authority, or public agency.

Reporting Level (RL) is the ML corresponding to an approved analytical method for reporting a sample result that is selected either from Appendix 4 of the SIP by the Regional Water Board in accordance with Section 2.4.2 of the SIP or established in accordance with Section 2.4.3 of the SIP. The ML is based on the proper application of method-based analytical procedures for sample preparation and the absence of any matrix interferences. Other factors may be applied to the ML depending on the specific sample preparation steps employed. For example, the treatment typically applied in cases where there are matrix-effects is to dilute the sample or sample aliquot by a factor of ten. In such cases, this additional factor must be applied to the ML in the computation of the RL.

Source of Drinking Water is any water designated as municipal or domestic supply (MUN) in a RWQCB basin plan.

ATTACHMENT B – REGIONWIDE WATER RECYCLING SYSTEM LOCATION MAP

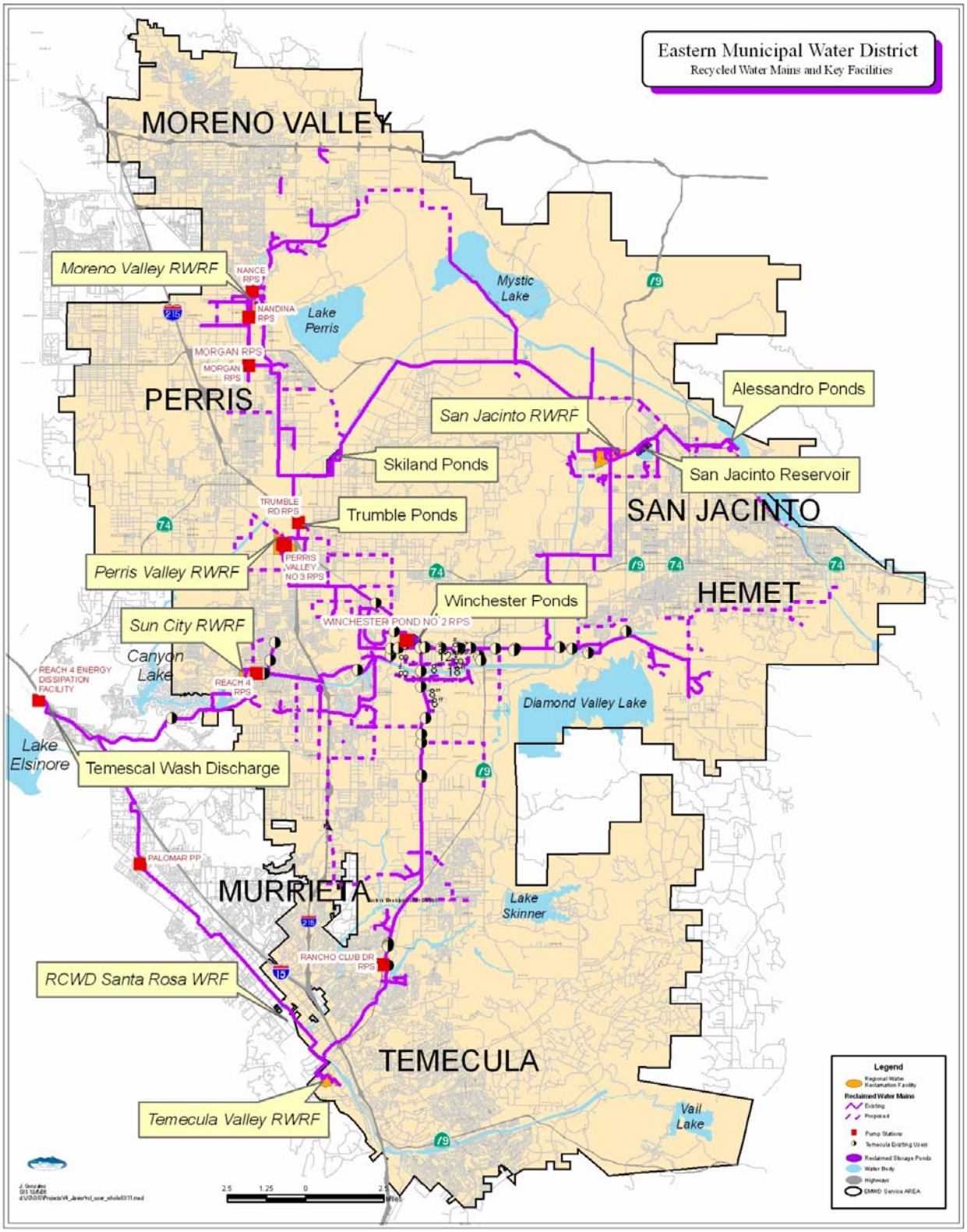

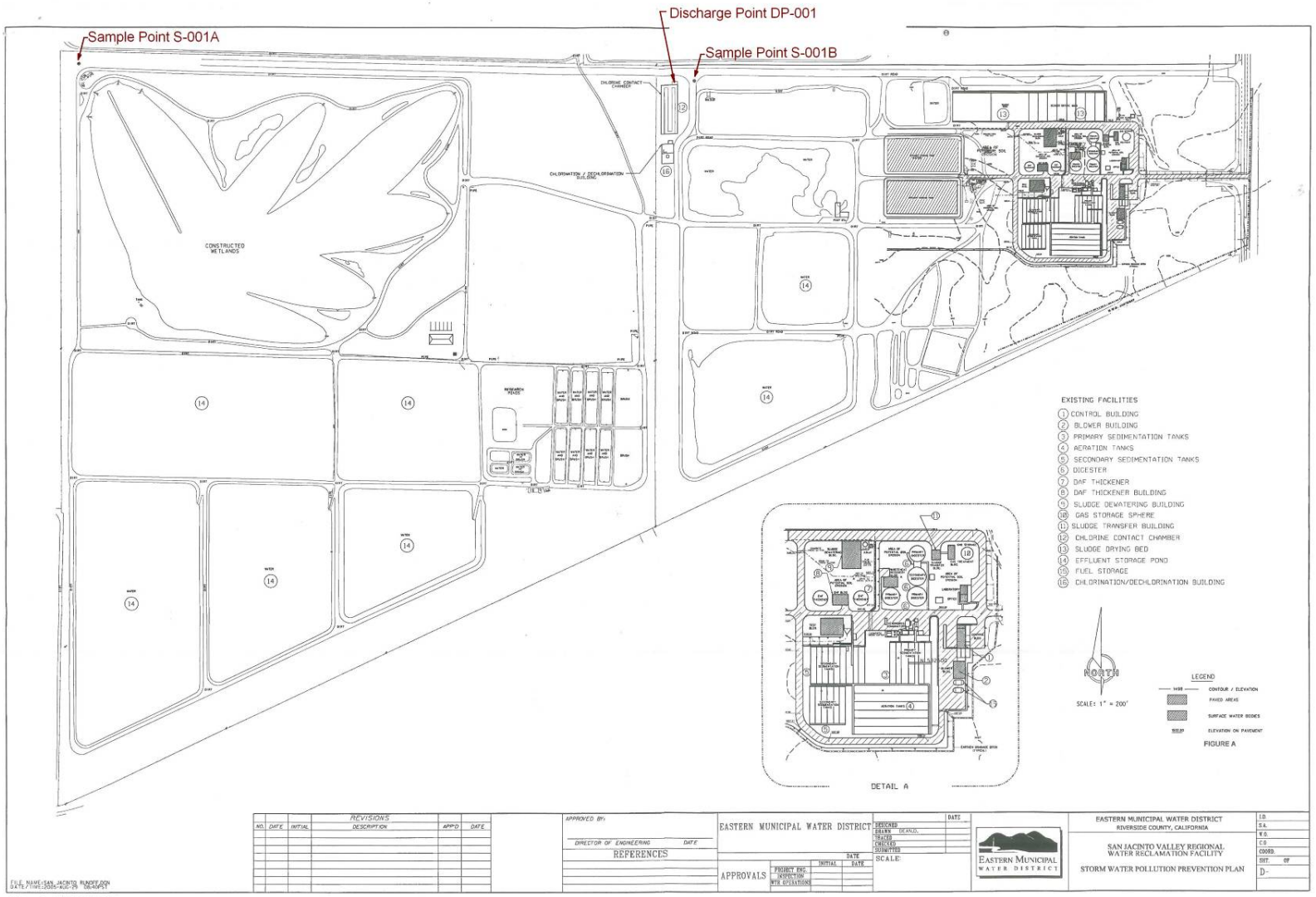

SJVRWRF Location Map

MVRWRF Location Map

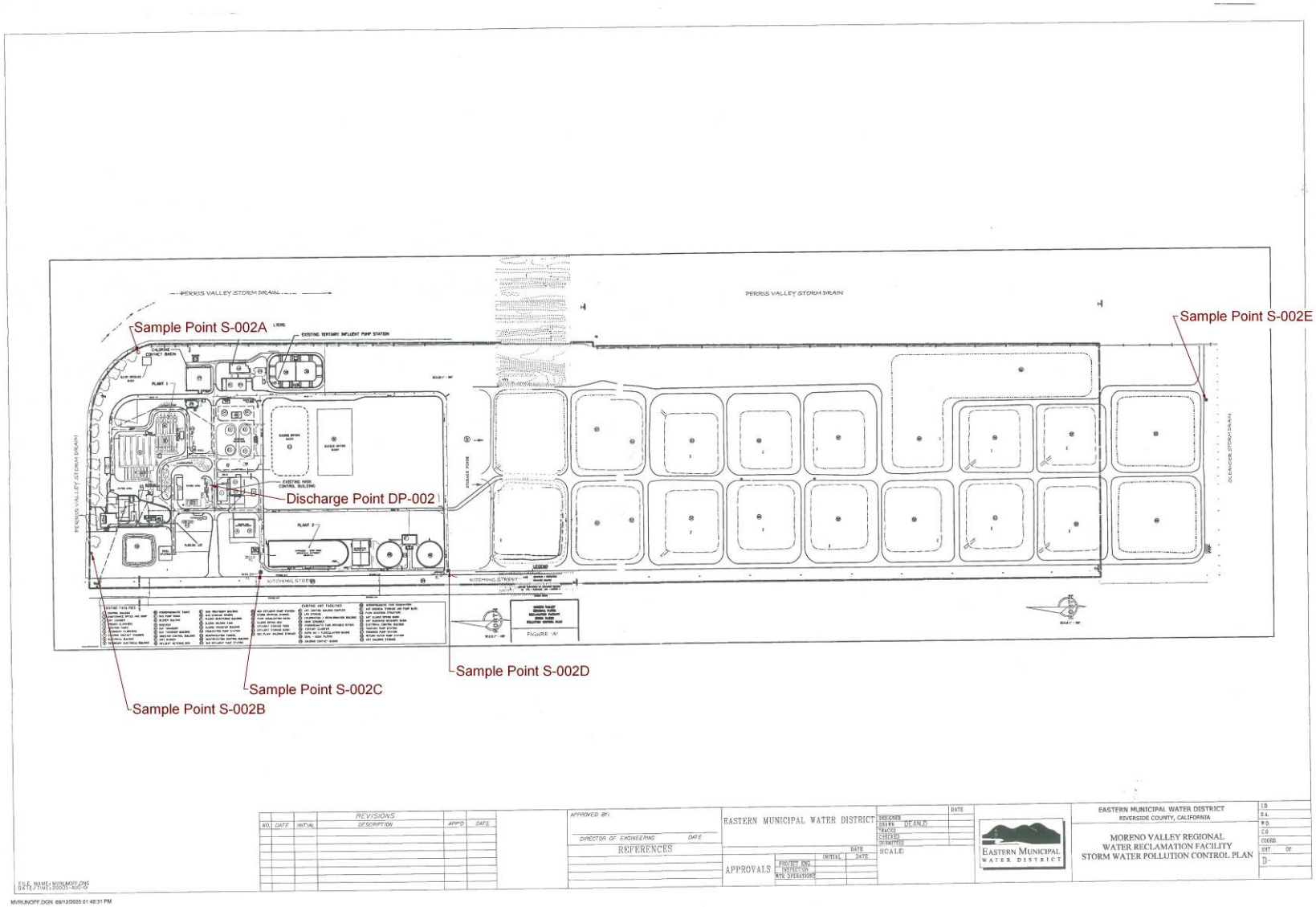

PVRWRF Location Map

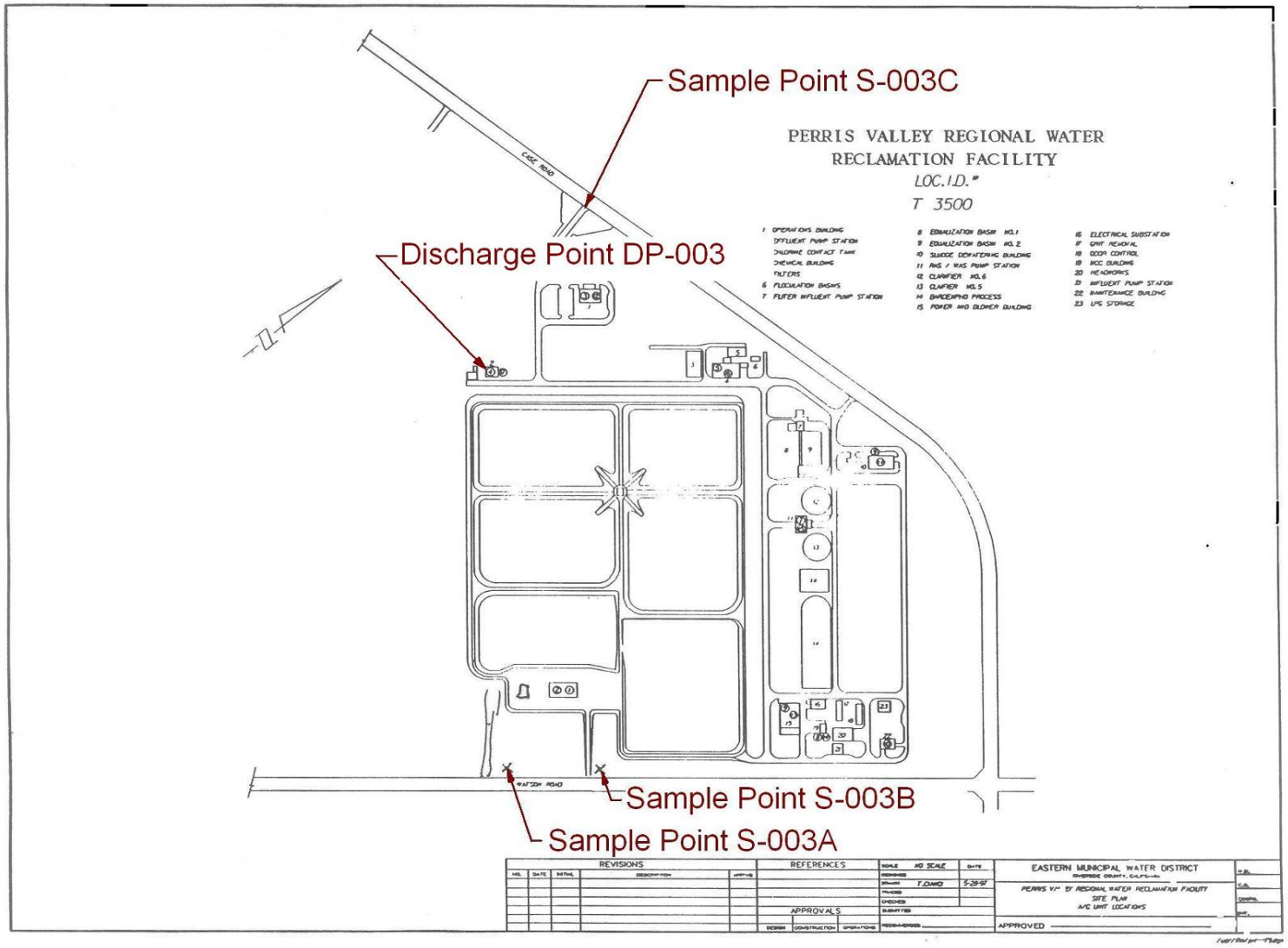

SRWRF Location Map

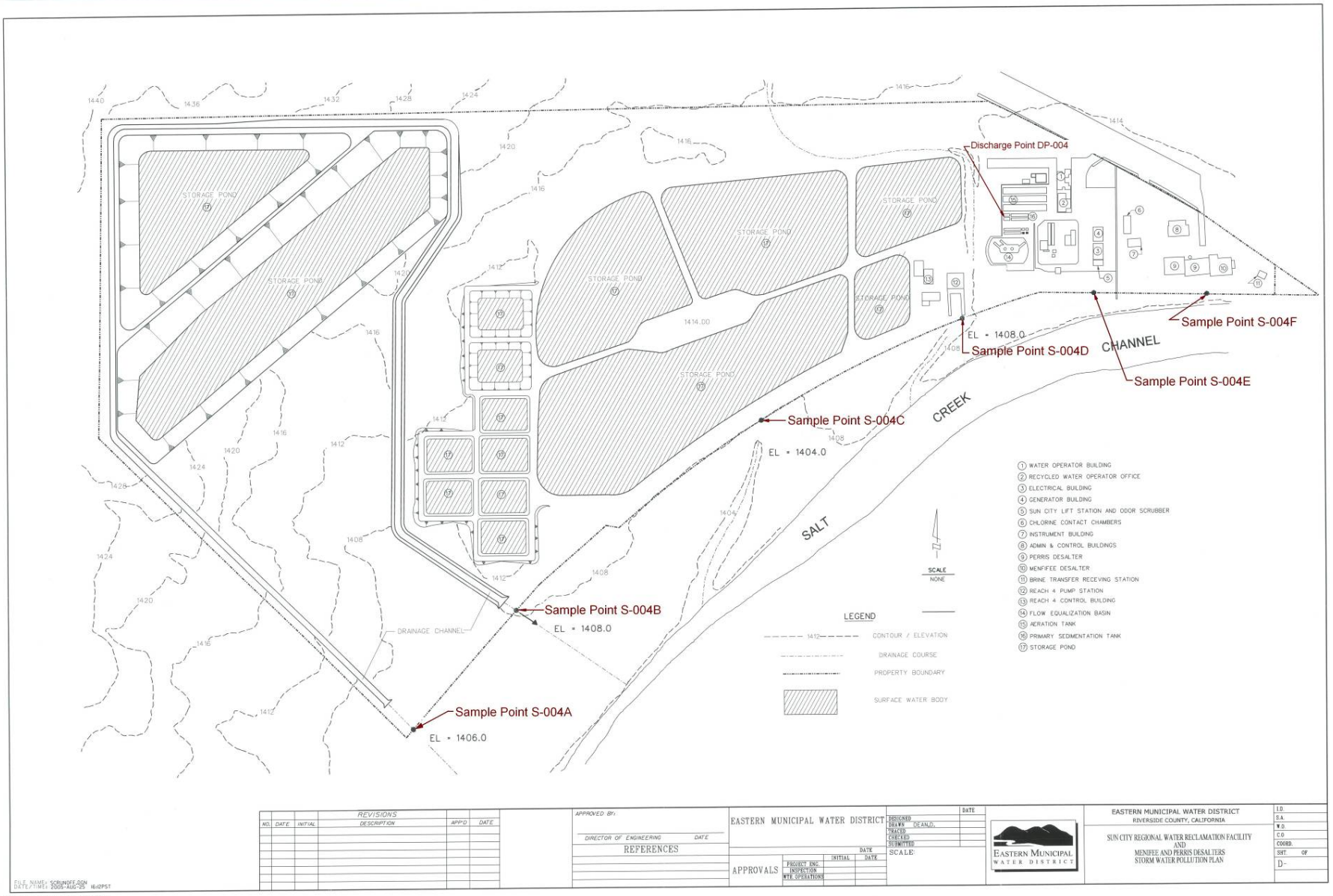

Santa Rosa Water Reclamation Facility Location Map

RANCHO CALIFORNIA WATER DISTRICT

CONSTRUCTION OF
SANTA ROSA WATER RECLAMATION FACILITY
INTERIM FACILITY IMPROVEMENTS
(PROJECT No. 20103)

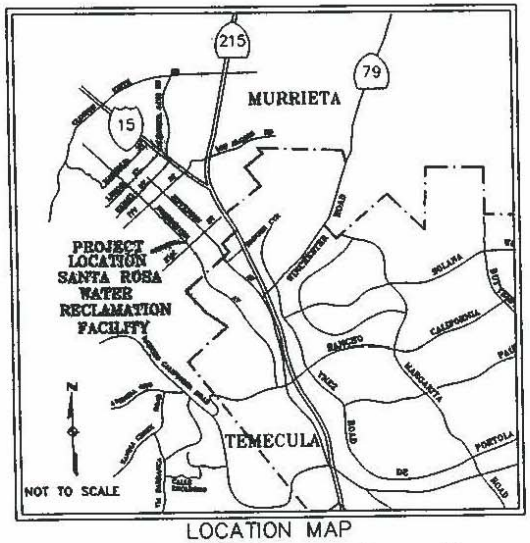

LOCATION MAP

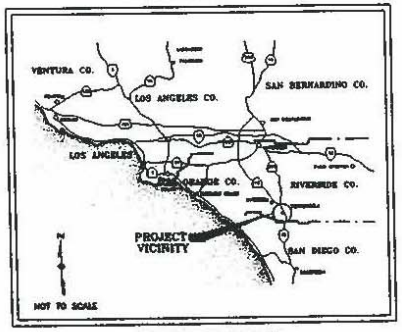

VICINITY MAP

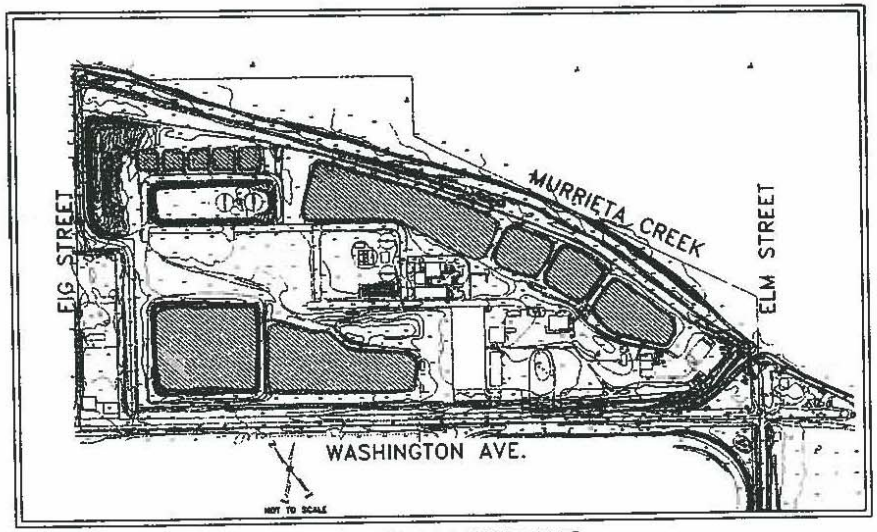

DETAILED LOCATION MAP

SANTA ROSA WATER RECLAMATION FACILITY

ATTACHMENT C – FLOW SCHEMATIC

EMWD Regionwide Water Recycling System Schematic

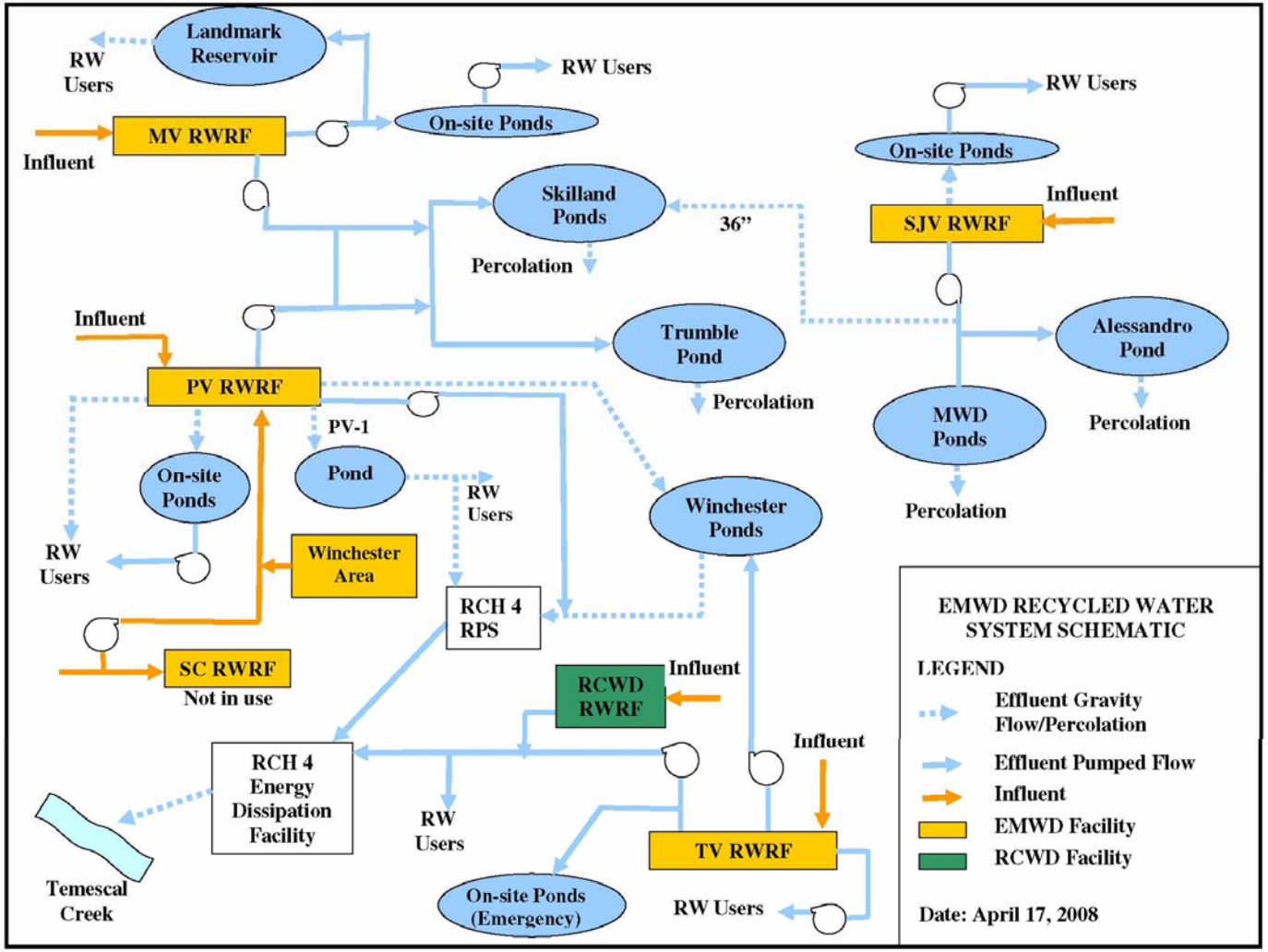

SJVRWRF Flow Schematic

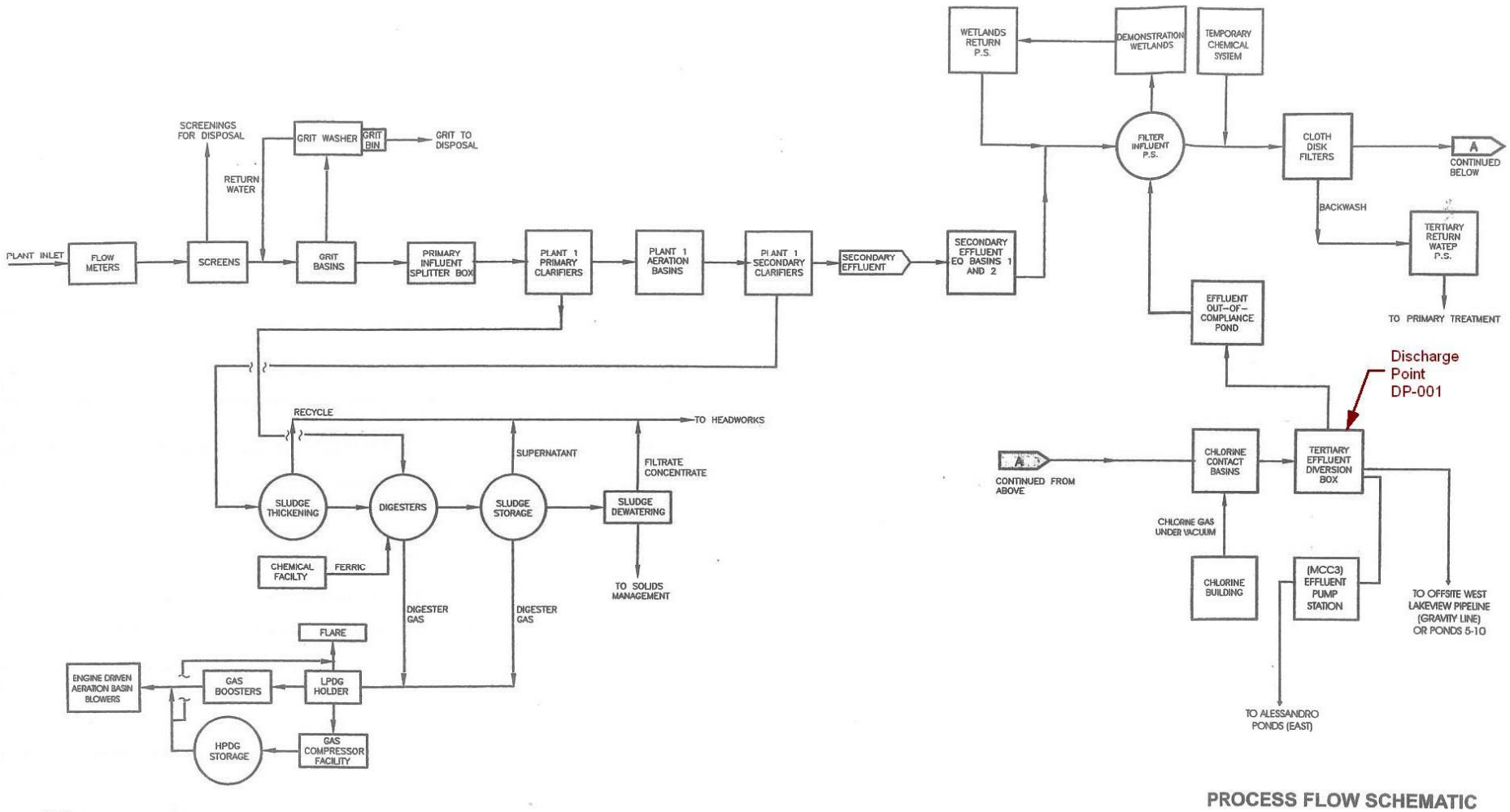

NOTES
1. PROCESS SCHEMATIC SHOWS ONLY THE GENERAL CONFIGURATION OF THE PROCESS FLOW.

MVRWRF Flow Schematic

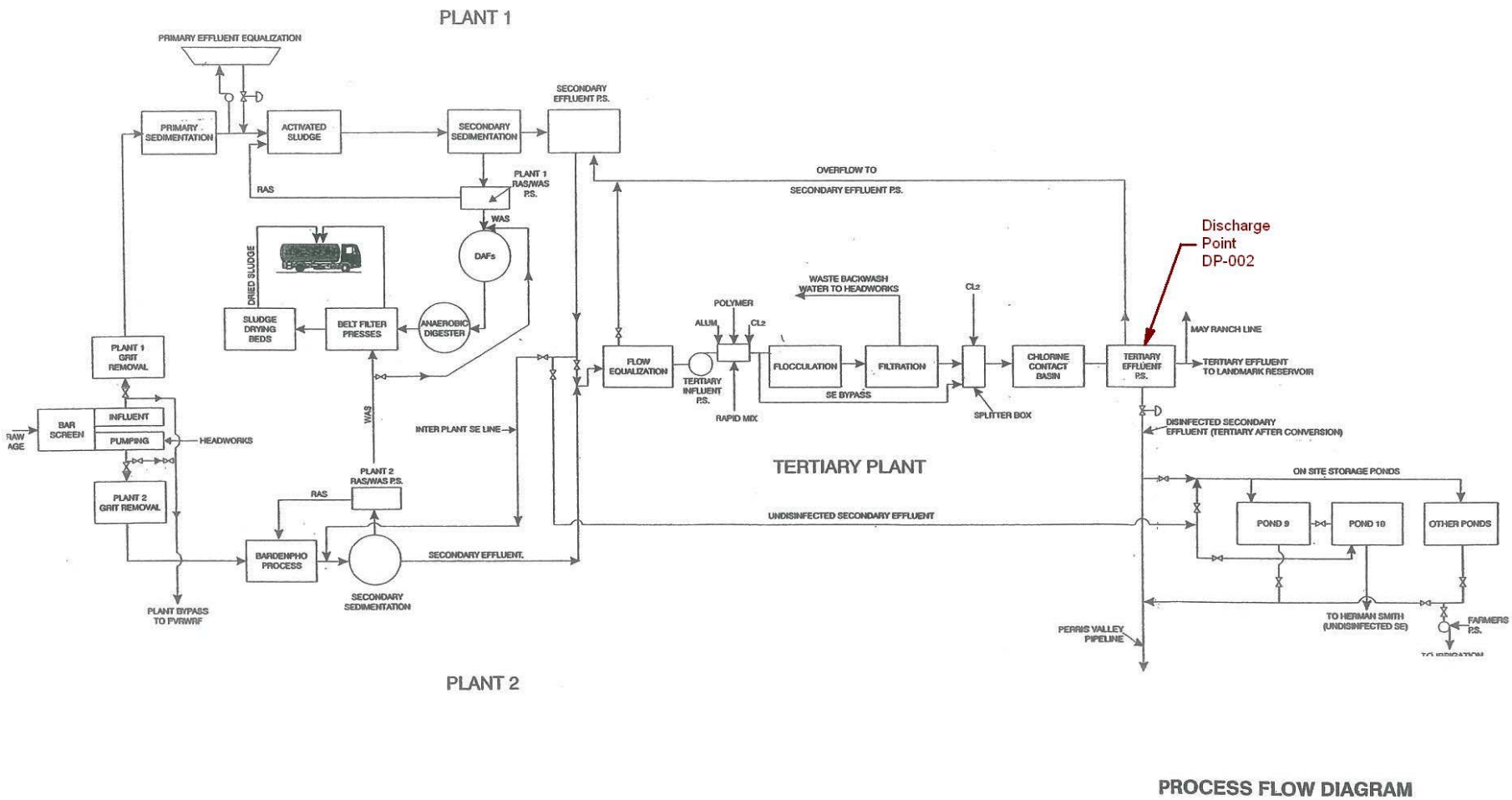

PVRWRF Plant 1 Flow Schematic

PERRIS VALLEY
REGIONAL WATER RECLAMATION FACILITY
PROCESS SCHEMATIC
3.0 MGD FACILITIES

Plant 1

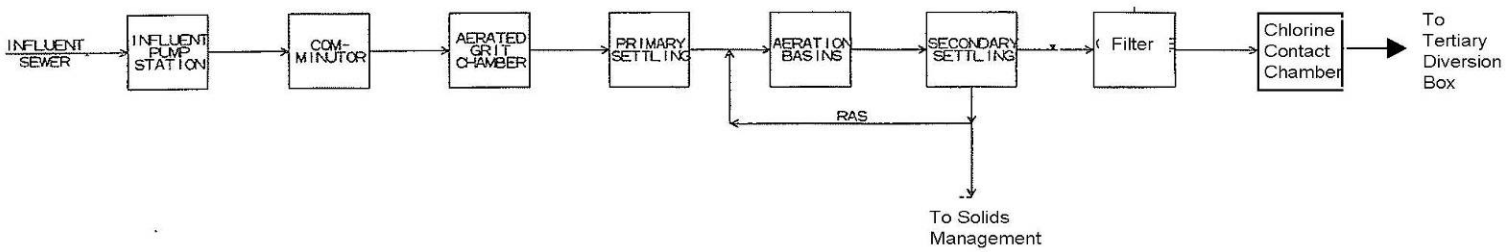

PVRWRF Plant 2 (& 3) Flow Schematic

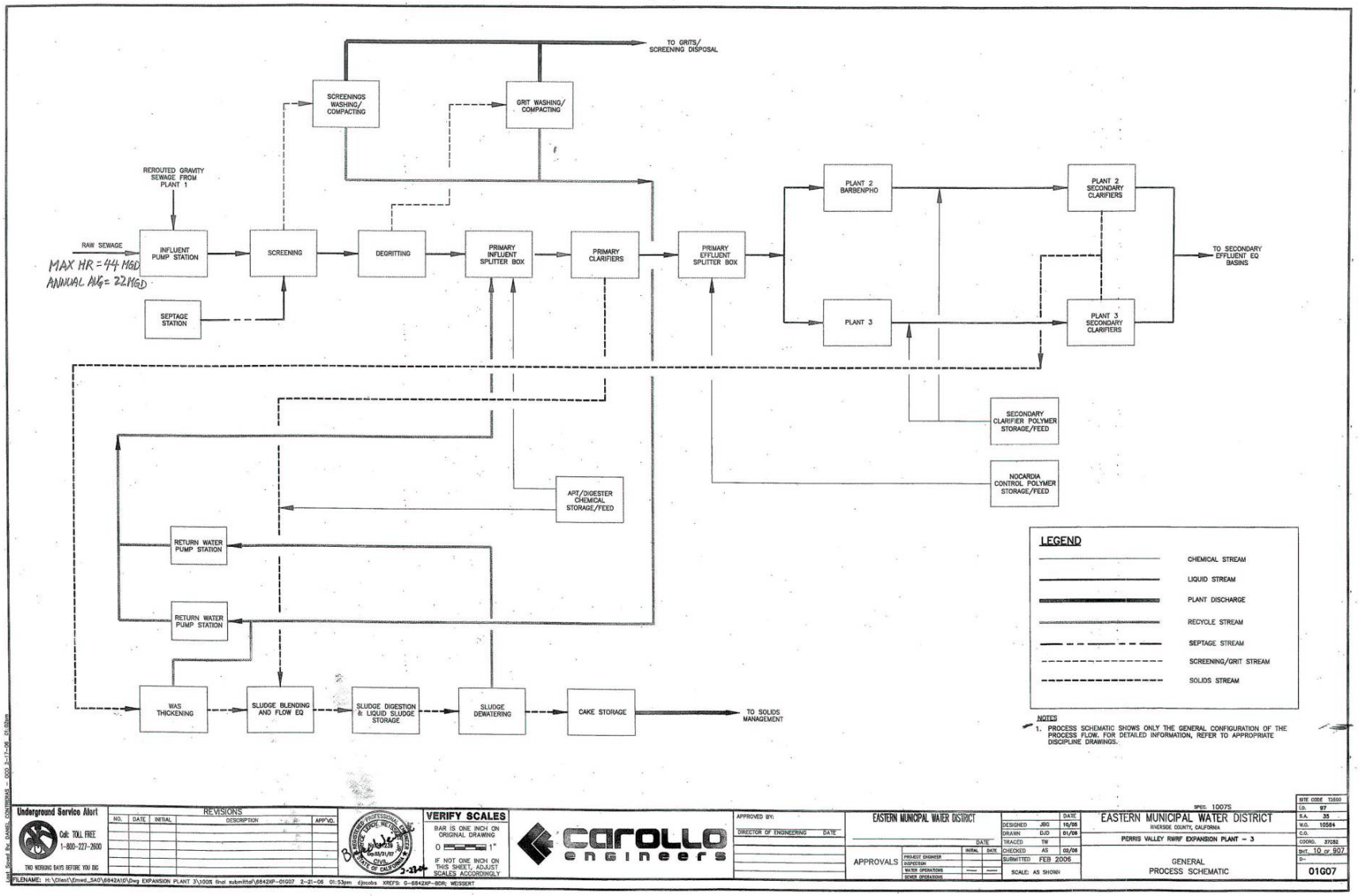

PVRWRF Plant 2 (& 3) Flow Schematic (continue)

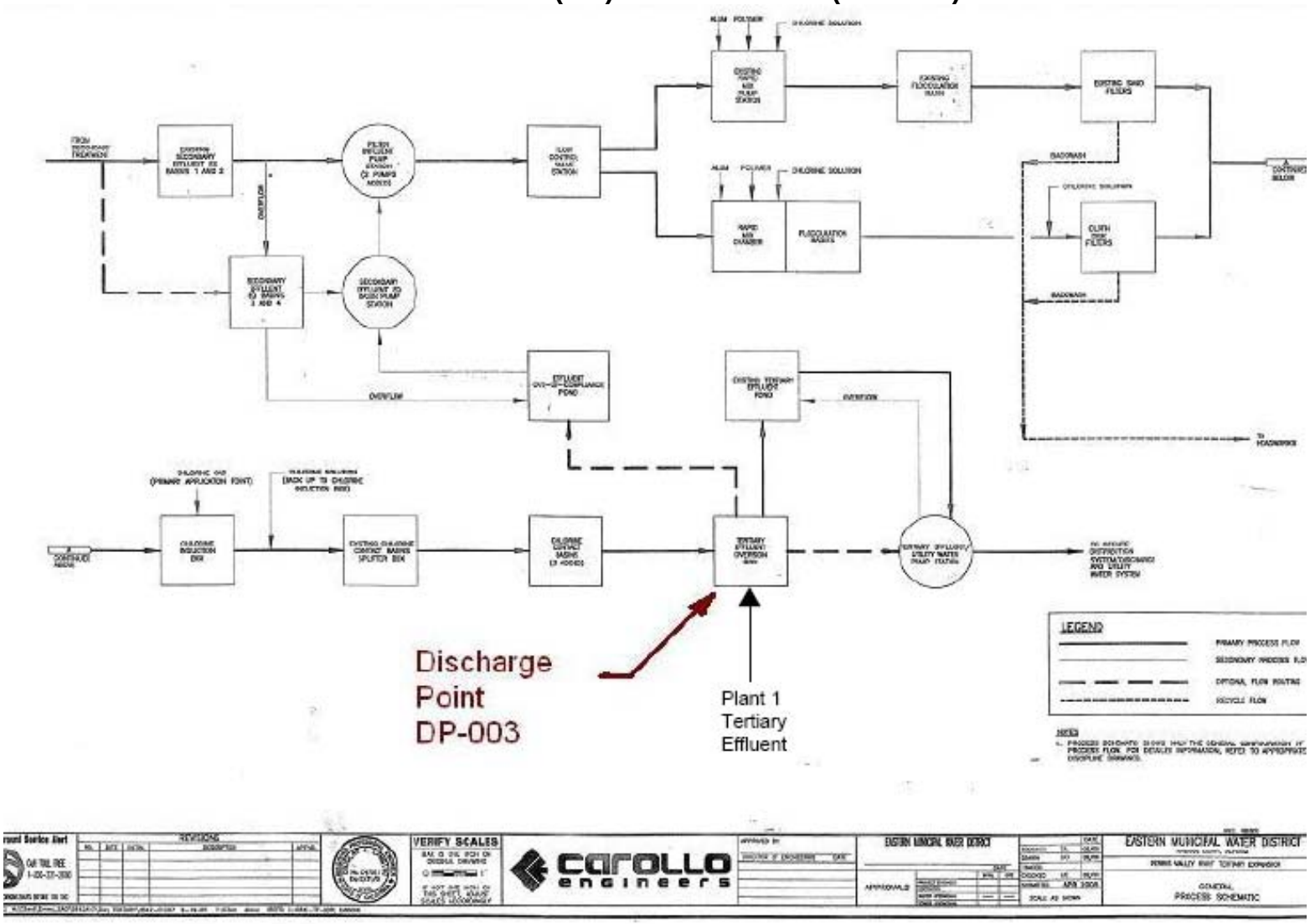

SCRWRF Flow Schematic

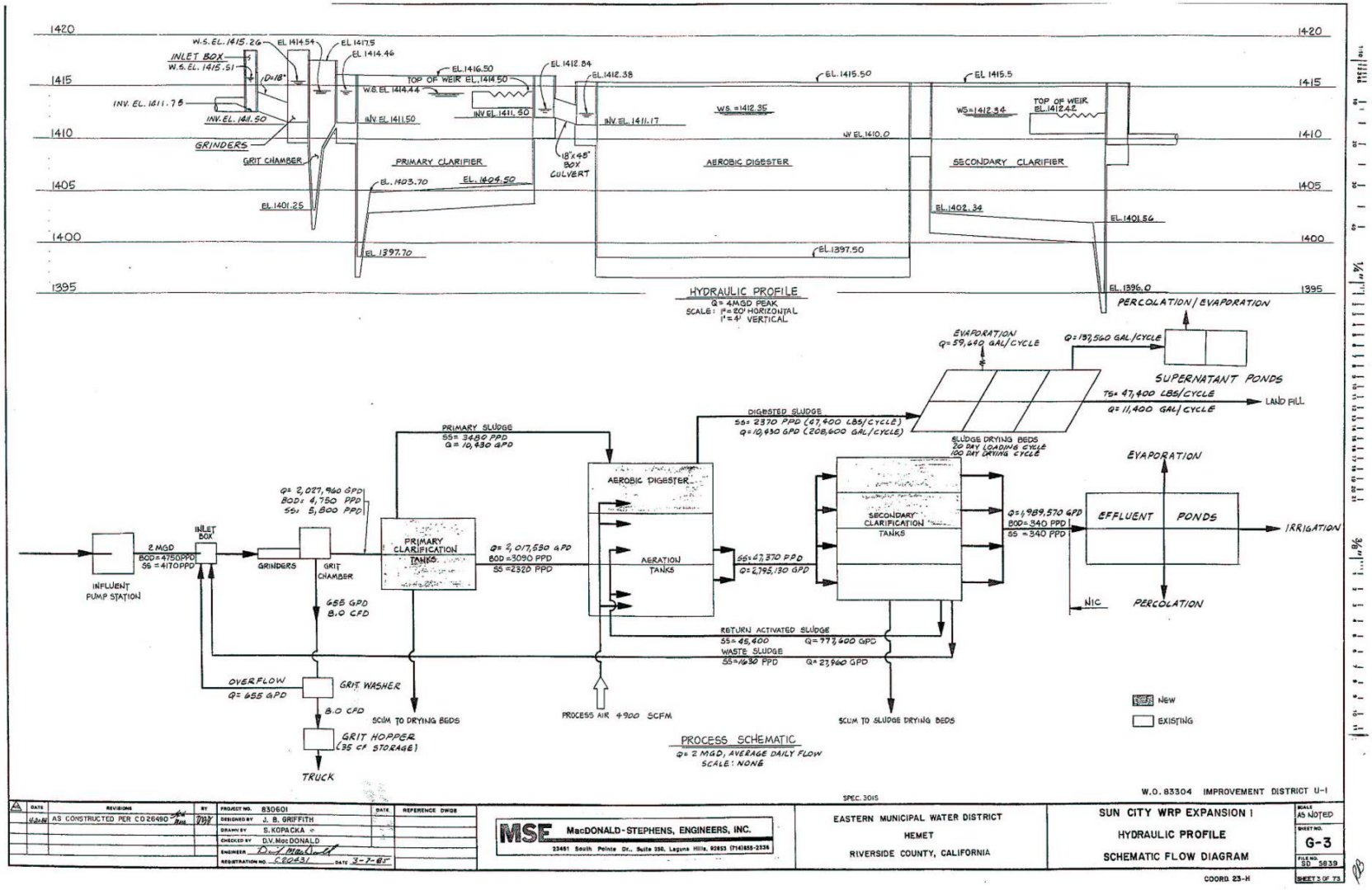

Santa Rosa RWRF Flow Schematic

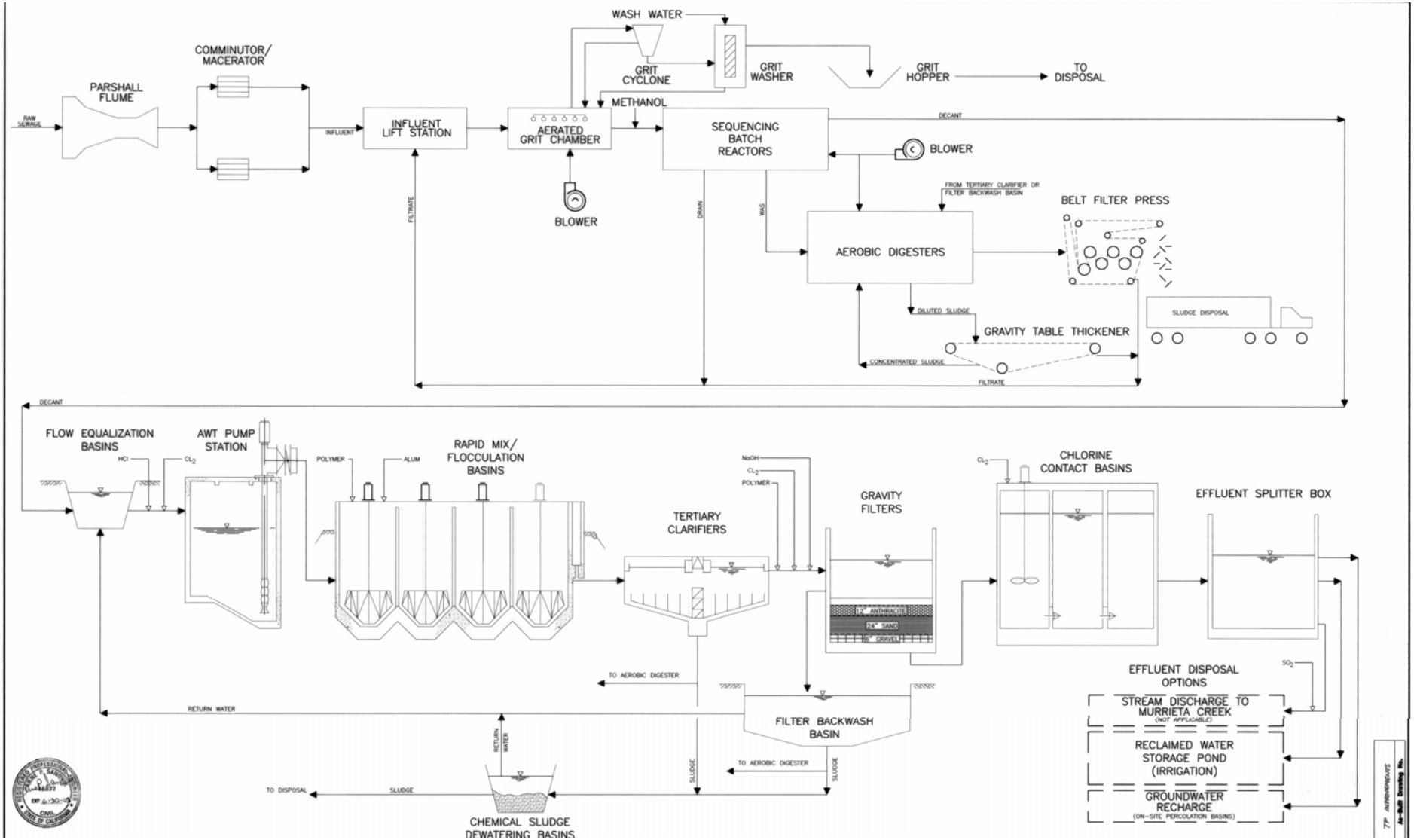

ATTACHMENT D –STANDARD PROVISIONS

I. STANDARD PROVISIONS – PERMIT COMPLIANCE

A. Duty to Comply

1. The Discharger must comply with all of the conditions of this Order. Any noncompliance constitutes a violation of the Clean Water Act (CWA) and the California Water Code and is grounds for enforcement action, for permit termination, revocation and reissuance, or modification; or denial of a permit renewal application. (40 C.F.R. § 122.41(a).)

2. The Discharger shall comply with effluent standards or prohibitions established under Section 307(a) of the CWA for toxic pollutants and with standards for sewage sludge use or disposal established under Section 405(d) of the CWA within the time provided in the regulations that establish these standards or prohibitions, even if this Order has not yet been modified to incorporate the requirement. (40 C.F.R. § 122.41(a)(1).)

B. Need to Halt or Reduce Activity Not a Defense

It shall not be a defense for a Discharger in an enforcement action that it would have been necessary to halt or reduce the permitted activity in order to maintain compliance with the conditions of this Order. (40 C.F.R. § 122.41(c).)

C. Duty to Mitigate

The Discharger shall take all reasonable steps to minimize or prevent any discharge or sludge use or disposal in violation of this Order that has a reasonable likelihood of adversely affecting human health or the environment. (40 C.F.R. § 122.41(d).)

D. Proper Operation and Maintenance

The Discharger shall at all times properly operate and maintain all facilities and systems of treatment and control (and related appurtenances) which are installed or used by the Discharger to achieve compliance with the conditions of this Order. Proper operation and maintenance also includes adequate laboratory controls and appropriate quality assurance procedures. This provision requires the operation of backup or auxiliary facilities or similar systems that are installed by a Discharger only when necessary to achieve compliance with the conditions of this Order. (40 C.F.R. § 122.41(e).)

E. Property Rights

1. This Order does not convey any property rights of any sort or any exclusive privileges. (40 C.F.R. § 122.41(g).)

2. The issuance of this Order does not authorize any injury to persons or property or invasion of other private rights, or any infringement of state or local law or regulations. (40 C.F.R. § 122.5(c).)

F. Inspection and Entry

The Discharger shall allow the Regional Water Board, State Water Board, United States Environmental Protection Agency (USEPA), and/or their authorized representatives (including an authorized contractor acting as their representative), upon the presentation of credentials and other documents, as may be required by law, to (40 C.F.R. § 122.41(i); Water Code, § 13383):

1. Enter upon the Discharger's premises where a regulated facility or activity is located or conducted, or where records are kept under the conditions of this Order (40 C.F.R. § 122.41(i)(1));

2. Have access to and copy, at reasonable times, any records that must be kept under the conditions of this Order (40 C.F.R. § 122.41(i)(2));

3. Inspect and photograph, at reasonable times, any facilities, equipment (including monitoring and control equipment), practices, or operations regulated or required under this Order (40 C.F.R. § 122.41(i)(3)); and

4. Sample or monitor, at reasonable times, for the purposes of assuring Order compliance or as otherwise authorized by the CWA or the Water Code, any substances or parameters at any location. (40 C.F.R. § 122.41(i)(4).)

G. Bypass

1. Definitions

   a. “Bypass” means the intentional diversion of waste streams from any portion of a treatment facility. (40 C.F.R. § 122.41(m)(1)(i).)

   b. “Severe property damage” means substantial physical damage to property, damage to the treatment facilities, which causes them to become inoperable, or substantial and permanent loss of natural resources that can reasonably be expected to occur in the absence of a bypass. Severe property damage does not mean economic loss caused by delays in production. (40 C.F.R. § 122.41(m)(1)(ii).)

2. Bypass not exceeding limitations. The Discharger may allow any bypass to occur which does not cause exceedances of effluent limitations, but only if it is for essential maintenance to assure efficient operation. These bypasses are not subject to the provisions listed in Standard Provisions – Permit Compliance I.G.3, I.G.4, and I.G.5 below. (40 C.F.R. § 122.41(m)(2).)

3. Prohibition of bypass. Bypass is prohibited, and the Regional Water Board may take enforcement action against a Discharger for bypass, unless (40 C.F.R. § 122.41(m)(4)(i)):

    a. Bypass was unavoidable to prevent loss of life, personal injury, or severe property damage (40 C.F.R. § 122.41(m)(4)(i)(A));

    b. There were no feasible alternatives to the bypass, such as the use of auxiliary treatment facilities, retention of untreated wastes, or maintenance during normal periods of equipment downtime. This condition is not satisfied if adequate back-up equipment should have been installed in the exercise of reasonable engineering judgment to prevent a bypass that occurred during normal periods of equipment downtime or preventive maintenance (40 C.F.R. § 122.41(m)(4)(i)(B)); and

    c. The Discharger submitted notice to the Regional Water Board as required under Standard Provisions – Permit Compliance I.G.5 below. (40 C.F.R. § 122.41(m)(4)(i)(C).)

4. The Regional Water Board may approve an anticipated bypass, after considering its adverse effects, if the Regional Water Board determines that it will meet the three conditions listed in Standard Provisions – Permit Compliance I.G.3 above. (40 C.F.R. § 122.41(m)(4)(ii).)

5. Notice

    a. Anticipated bypass. If the Discharger knows in advance of the need for a bypass, it shall submit a notice, if possible at least 10 days before the date of the bypass. (40 C.F.R. § 122.41(m)(3)(i).)

    b. Unanticipated bypass. The Discharger shall submit notice of an unanticipated bypass as required in Standard Provisions - Reporting V.E below (24-hour notice). (40 C.F.R. § 122.41(m)(3)(ii).)

H. Upset

Upset means an exceptional incident in which there is unintentional and temporary noncompliance with technology based permit effluent limitations because of factors beyond the reasonable control of the Discharger. An upset does not include noncompliance to the extent caused by operational error, improperly designed treatment facilities, inadequate treatment facilities, lack of preventive maintenance, or careless or improper operation. (40 C.F.R. § 122.41(n)(1).)

1. Effect of an upset. An upset constitutes an affirmative defense to an action brought for noncompliance with such technology based permit effluent limitations if the requirements of Standard Provisions – Permit Compliance I.H.2 below are met. No determination made during administrative review of claims that noncompliance was caused by upset, and before an action for noncompliance, is final administrative action subject to judicial review. (40 C.F.R. § 122.41(n)(2).).

2. Conditions necessary for a demonstration of upset. A Discharger who wishes to establish the affirmative defense of upset shall demonstrate, through properly signed, contemporaneous operating logs or other relevant evidence that (40 C.F.R. § 122.41(n)(3)):

   a. An upset occurred and that the Discharger can identify the cause(s) of the upset (40 C.F.R. § 122.41(n)(3)(i));

   b. The permitted facility was, at the time, being properly operated (40 C.F.R. § 122.41(n)(3)(ii));

   c. The Discharger submitted notice of the upset as required in Standard Provisions – Reporting V.E.2.b below (24-hour notice) (40 C.F.R. § 122.41(n)(3)(iii)); and

   d. The Discharger complied with any remedial measures required under Standard Provisions – Permit Compliance I.C above. (40 C.F.R. § 122.41(n)(3)(iv).)

3. Burden of proof. In any enforcement proceeding, the Discharger seeking to establish the occurrence of an upset has the burden of proof. (40 C.F.R. § 122.41(n)(4).)

II. STANDARD PROVISIONS – PERMIT ACTION

A. General

This Order may be modified, revoked and reissued, or terminated for cause. The filing of a request by the Discharger for modification, revocation and reissuance, or termination, or a notification of planned changes or anticipated noncompliance does not stay any Order condition. (40 C.F.R. § 122.41(f).)

B. Duty to Reapply

If the Discharger wishes to continue an activity regulated by this Order after the expiration date of this Order, the Discharger must apply for and obtain a new permit. (40 C.F.R. § 122.41(b).)

C. Transfers

This Order is not transferable to any person except after notice to the Regional Water Board. The Regional Water Board may require modification or revocation and reissuance of the Order to change the name of the Discharger and incorporate such other requirements as may be necessary under the CWA and the Water Code. (40 C.F.R. § 122.41(l)(3); § 122.61.)

III. STANDARD PROVISIONS – MONITORING

A. Samples and measurements taken for the purpose of monitoring shall be representative of the monitored activity. (40 C.F.R. § 122.41(j)(1).)

B. Monitoring results must be conducted according to test procedures under Part 136 or, in the case of sludge use or disposal, approved under Part 136 unless otherwise specified in Part 503 unless other test procedures have been specified in this Order. (40 C.F.R. § 122.41(j)(4); § 122.44(i)(1)(iv).)

IV. STANDARD PROVISIONS – RECORDS

A. Except for records of monitoring information required by this Order related to the Discharger's sewage sludge use and disposal activities, which shall be retained for a period of at least five years (or longer as required by Part 503), the Discharger shall retain records of all monitoring information, including all calibration and maintenance records and all original strip chart recordings for continuous monitoring instrumentation, copies of all reports required by this Order, and records of all data used to complete the application for this Order, for a period of at least three (3) years from the date of the sample, measurement, report or application. This period may be extended by request of the Regional Water Board Executive Officer at any time. (40 C.F.R. § 122.41(j)(2).)

B. Records of monitoring information shall include:

1. The date, exact place, and time of sampling or measurements (40 C.F.R. § 122.41(j)(3)(i));

2. The individual(s) who performed the sampling or measurements (40 C.F.R. § 122.41(j)(3)(ii));

3. The date(s) analyses were performed (40 C.F.R. § 122.41(j)(3)(iii));

4. The individual(s) who performed the analyses (40 C.F.R. § 122.41(j)(3)(iv));

5. The analytical techniques or methods used (40 C.F.R. § 122.41(j)(3)(v)); and

6. The results of such analyses. (40 C.F.R. § 122.41(j)(3)(vi).)

C. Claims of confidentiality for the following information will be denied (40 C.F.R. § 122.7(b)):

1. The name and address of any permit applicant or Discharger (40 C.F.R. § 122.7(b)(1)); and

2. Permit applications and attachments, permits and effluent data. (40 C.F.R. § 122.7(b)(2).)

V. STANDARD PROVISIONS – REPORTING

A. Duty to Provide Information

The Discharger shall furnish to the Regional Water Board, State Water Board, or USEPA within a reasonable time, any information which the Regional Water Board, State Water Board, or USEPA may request to determine whether cause exists for modifying, revoking and reissuing, or terminating this Order or to determine compliance with this Order. Upon request, the Discharger shall also furnish to the Regional Water Board, State Water Board, or USEPA copies of records required to be kept by this Order. (40 C.F.R. § 122.41(h); Wat. Code, § 13267.)

B. Signatory and Certification Requirements

1. All applications, reports, or information submitted to the Regional Water Board, State Water Board, and/or USEPA shall be signed and certified in accordance with Standard Provisions – Reporting V.B.2, V.B.3, V.B.4, and V.B.5 below. (40 C.F.R. § 122.41(k).)

2. All permit applications shall be signed by either a principal executive officer or ranking elected official. For purposes of this provision, a principal executive officer of a federal agency includes: (i) the chief executive officer of the agency, or (ii) a senior executive officer having responsibility for the overall operations of a principal geographic unit of the agency (e.g., Regional Administrators of USEPA). (40 C.F.R. § 122.22(a)(3).).

3. All reports required by this Order and other information requested by the Regional Water Board, State Water Board, or USEPA shall be signed by a person described in Standard Provisions – Reporting V.B.2 above, or by a duly authorized representative of that person. A person is a duly authorized representative only if:

   a. The authorization is made in writing by a person described in Standard Provisions – Reporting V.B.2 above (40 C.F.R. § 122.22(b)(1));

b. The authorization specifies either an individual or a position having responsibility for the overall operation of the regulated facility or activity such as the position of plant manager, operator of a well or a well field, superintendent, position of equivalent responsibility, or an individual or position having overall responsibility for environmental matters for the company. (A duly authorized representative may thus be either a named individual or any individual occupying a named position.) (40 C.F.R. § 122.22(b)(2)); and

c. The written authorization is submitted to the Regional Water Board and State Water Board. (40 C.F.R. § 122.22(b)(3).)

4. If an authorization under Standard Provisions – Reporting V.B.3 above is no longer accurate because a different individual or position has responsibility for the overall operation of the facility, a new authorization satisfying the requirements of Standard Provisions – Reporting V.B.3 above must be submitted to the Regional Water Board and State Water Board prior to or together with any reports, information, or applications, to be signed by an authorized representative. (40 C.F.R. § 122.22(c).)

5. Any person signing a document under Standard Provisions – Reporting V.B.2 or V.B.3 above shall make the following certification:

   "I certify under penalty of law that this document and all attachments were prepared under my direction or supervision in accordance with a system designed to assure that qualified personnel properly gather and evaluate the information submitted. Based on my inquiry of the person or persons who manage the system or those persons directly responsible for gathering the information, the information submitted is, to the best of my knowledge and belief, true, accurate, and complete. I am aware that there are significant penalties for submitting false information, including the possibility of fine and imprisonment for knowing violations." (40 C.F.R. § 122.22(d).)

C. Monitoring Reports

1. Monitoring results shall be reported at the intervals specified in the Monitoring and Reporting Program (Attachment E) in this Order. (40 C.F.R. § 122.22(l)(4).)

2. Monitoring results must be reported on a Discharge Monitoring Report (DMR) form or forms provided or specified by the Regional Water Board or State Water Board for reporting results of monitoring of sludge use or disposal practices. (40 C.F.R. § 122.41(l)(4)(i).)

3. If the Discharger monitors any pollutant more frequently than required by this Order using test procedures approved under Part 136 or, in the case of sludge use or disposal, approved under Part 136 unless otherwise specified in Part 503, or as specified in this Order, the results of this monitoring shall be included in the calculation and reporting of the data submitted in the DMR or sludge reporting form specified by the Regional Water Board. (40 C.F.R. § 122.41(l)(4)(ii).)

4. Calculations for all limitations, which require averaging of measurements, shall utilize an arithmetic mean unless otherwise specified in this Order. (40 C.F.R. § 122.41(l)(4)(iii).)

D. Compliance Schedules

Reports of compliance or noncompliance with, or any progress reports on, interim and final requirements contained in any compliance schedule of this Order, shall be submitted no later than 14 days following each schedule date. (40 C.F.R. § 122.41(l)(5).)

E. Twenty-Four Hour Reporting

1. The Discharger shall report any noncompliance that may endanger health or the environment. Any information shall be provided orally within 24 hours from the time the Discharger becomes aware of the circumstances. A written submission shall also be provided within five (5) days of the time the Discharger becomes aware of the circumstances. The written submission shall contain a description of the noncompliance and its cause; the period of noncompliance, including exact dates and times, and if the noncompliance has not been corrected, the anticipated time it is expected to continue; and steps taken or planned to reduce, eliminate, and prevent reoccurrence of the noncompliance. (40 C.F.R. § 122.41(l)(6)(i).)

2. The following shall be included as information that must be reported within 24 hours under this paragraph (40 C.F.R. § 122.41(l)(6)(ii)):

   a. Any unanticipated bypass that exceeds any effluent limitation in this Order. (40 C.F.R. § 122.41(l)(6)(ii)(A).)

   b. Any upset that exceeds any effluent limitation in this Order. (40 C.F.R. § 122.41(l)(6)(ii)(B).)

3. The Regional Water Board may waive the above-required written report under this provision on a case-by-case basis if an oral report has been received within 24 hours. (40 C.F.R. § 122.41(l)(6)(iii).)

F. Planned Changes

The Discharger shall give notice to the Regional Water Board as soon as possible of any planned physical alterations or additions to the permitted facility. Notice is required under this provision only when (40 C.F.R. § 122.41(l)(1)):

1. The alteration or addition to a permitted facility may meet one of the criteria for determining whether a facility is a new source in section 122.29(b) (40 C.F.R. § 122.41(l)(1)(i)); or

2. The alteration or addition could significantly change the nature or increase the quantity of pollutants discharged. This notification applies to pollutants that are not subject to effluent limitations in this Order. (40 C.F.R. § 122.41(l)(1)(ii).)

3. The alteration or addition results in a significant change in the Discharger's sludge use or disposal practices, and such alteration, addition, or change may justify the application of permit conditions that are different from or absent in the existing permit, including notification of additional use or disposal sites not reported during the permit application process or not reported pursuant to an approved land application plan. (40 C.F.R.§ 122.41(l)(1)(iii).)

G. Anticipated Noncompliance

The Discharger shall give advance notice to the Regional Water Board or State Water Board of any planned changes in the permitted facility or activity that may result in noncompliance with General Order requirements. (40 C.F.R. § 122.41(l)(2).)

H. Other Noncompliance

The Discharger shall report all instances of noncompliance not reported under Standard Provisions – Reporting V.C, V.D, and V.E above at the time monitoring reports are submitted. The reports shall contain the information listed in Standard Provision – Reporting V.E above. (40 C.F.R. § 122.41(l)(7).)

I. Other Information

When the Discharger becomes aware that it failed to submit any relevant facts in a permit application, or submitted incorrect information in a permit application or in any report to the Regional Water Board, State Water Board, or USEPA, the Discharger shall promptly submit such facts or information. (40 C.F.R. § 122.41(l)(8).)

VI. STANDARD PROVISIONS – ENFORCEMENT

A. The Regional Water Board is authorized to enforce the terms of this permit under several provisions of the Water Code, including, but not limited to, sections 13385, 13386, and 13387.

VII. ADDITIONAL PROVISIONS – NOTIFICATION LEVELS

A. Publicly-Owned Treatment Works (POTWs)

All POTWs shall provide adequate notice to the Regional Water Board of the following (40 C.F.R. § 122.42(b)):

1. Any new introduction of pollutants into the POTW from an indirect discharger that would be subject to sections 301 or 306 of the CWA if it were directly discharging those pollutants (40 C.F.R. § 122.42(b)(1)); and

2. Any substantial change in the volume or character of pollutants being introduced into that POTW by a source introducing pollutants into the POTW at the time of adoption of the Order. (40 C.F.R. § 122.42(b)(2).)

3. Adequate notice shall include information on the quality and quantity of effluent introduced into the POTW as well as any anticipated impact of the change on the quantity or quality of effluent to be discharged from the POTW. (40 C.F.R. § 122.42(b)(3).)

ATTACHMENT E – MONITORING AND REPORTING PROGRAM

Table of Contents

I. General Monitoring Provisions E-3
II. Monitoring Locations E-5
III. Influent Monitoring Requirements – Not Applicable E-6
IV. Effluent Monitoring Requirements to Surface Water E-6
  A. Effluent Monitoring Locations M-001 ..... E-6
  B. Secondary Effluent Monitoring Location at M-001 with 20:1 Dilution E-9
V. Whole Effluent Toxicity Testing Requirements E-10
  A. Toxicity Monitoring Requirements at M-001 ..... E-10
VI. Land Discharge Monitoring Requirements – Not Applicable E-12
VII. Reclamation Monitoring Requirements- NOt Applicable E-12
VIII. Receiving Water Monitoring Requirements – Surface Water and Groundwater E-12
  A. Monitoring During 20:1 Dilution: E-12
  B. Monitoring Location R-001U for Surface Water E-13
  C. Monitoring Location R-001D for Surface Water: E-13
  D. Regional Monitoring for Fish Flesh Testing: E-14
  E. Monitoring Requirements for Groundwater – Not Applicable E-14
IX. Other Monitoring Requirements E-14
  A. Biosolids Monitoring – Not Applicable E-14
  B. Stormwater Monitoring E-14
  C. Water Supply Monitoring E-14
  D. Pretreatment Monitoring and Reporting – Not Applicable E-14
  E. TDS/TIN Offset Program Monitoring and Reporting E-14
X. Reporting Requirements E-15
  A. General Monitoring and Reporting Requirements E-15
  B. Self Monitoring Reports (SMRs) E-17
  C. Discharge Monitoring Reports (DMRs) E-20
  D. Other Reports E-20

List of Tables

Table 1 Monitoring Station Locations E-5
Table 2 Tertiary Effluent Monitoring M-001 ..... E-6
Table 3 Tertiary Effluent Monitoring M-002 to M-007 ..... E-8
Table 4 Secondary Effluent Monitoring at M-001 with 20:1 Dilution E-9
Table 5 Secondary Effluent Monitoring at M-002 to M-006 with 20:1 Dilution E-10
Table 6 Receiving Water Monitoring Requirements at R-001U E-13
Table 7 Receiving Water Monitoring at R-001D E-13
Table 8 Reporting Requirements E-17
Table 9 Monitoring Periods and Reporting Schedule E-17
Table 10 Monitoring Reporting Submittal E-20

ATTACHMENT E – MONITORING AND REPORTING PROGRAM (MRP)

The Code of Federal Regulations section 122.48 requires that all NPDES permits specify monitoring and reporting requirements. Water Code Sections 13267 and 13383 also authorize the Regional Water Quality Control Board (Regional Water Board) to require technical and monitoring reports. This MRP establishes monitoring and reporting requirements, which implement the federal and California regulations.

I. GENERAL MONITORING PROVISIONS

A. General Monitoring Provision

1. All sampling and sample preservation shall be in accordance with the current edition of “Standard Methods for the Examination of Water and Wastewater” (American Public Health Association) or 40CFR136. (revised as of April 11, 2007) "Guidelines Establishing Test Procedures for the Analysis of Pollutants," promulgated by the United States Environmental Protection Agency (EPA).

2. All laboratory analyses shall be performed in accordance with test procedures under 40 CFR 136 (revised as of April 11, 2007) "Guidelines Establishing Test Procedures for the Analysis of Pollutants," promulgated by the United States Environmental Protection Agency (EPA), unless otherwise specified in this MRP. In addition, the Regional Water Board and/or EPA, at their discretion, may specify test methods that are more sensitive than those specified in 40 CFR 136.

3. Chemical, bacteriological, and bioassay analyses shall be conducted at a laboratory certified for such analyses by the California Department of Public Health in accordance with the provision of Water Code Section 13176, or conducted at a laboratory certified for such analyses by the EPA or at laboratories approved by the Regional Water Board's Executive Officer.

4. In conformance with federal regulations 40 CFR 122.45(c), analyses to determine compliance with the effluent limitations for metals shall be conducted using the total recoverable method. For Chromium (VI), the dissolved method in conformance with 40 CFR 136 may be used to measure compliance with the Chromium (VI) limitation.

5. The Discharger shall have, and implement an acceptable written quality assurance (QA) plan for laboratory analyses. Duplicate chemical analyses must be conducted on a minimum of ten percent (10%) of the samples, or at least one sample per month, whichever is greater. A similar frequency shall be maintained for analyzing spiked samples. When requested by the Regional Water Board or EPA, the Discharger will participate in the NPDES discharge monitoring report QA performance study.

6. For every item of monitoring data where the requirements are not met, the monitoring report shall include a statement discussing the reasons for noncompliance, the actions undertaken or proposed that will bring the discharge into full compliance with requirements at the earliest time, and an estimate of the date when the Discharger will be in compliance. The Discharger shall notify the Regional Water Board by letter when compliance with the time schedule has been achieved.

7. The Discharger shall assure that records of all monitoring information are maintained and accessible for a period of at least five years (this retention period supercedes the retention period specified in Section IV.A. of Attachment D) from the date of the sample, report, or application. This period of retention shall be extended during the course of any unresolved litigation regarding this discharge or by the request of the Regional Water Board at any time. Records of monitoring information shall include:

    a. The information listed in Attachment D- IV Standard Provisions – Records, subparagraph B. of this Order;
    b. The laboratory which performed the analyses;
    c. The date(s) analyses were performed;
    d. The individual(s) who performed the analyses;
    e. The modification(s) to analytical techniques or methods used;
    f. All sampling and analytical results, including
        1) Units of measurement used;
        2) Minimum reporting level for the analysis (minimum level);
        3) Results less than the reporting level but above the method detection limit (MDL);
        4) Data qualifiers and a description of the qualifiers;
        5) Quality control test results (and a written copy of the laboratory quality assurance plan);
        6) Dilution factors, if used; and
        7) Sample matrix type.
    g. All monitoring equipment calibration and maintenance records;
    h. All original strip charts from continuous monitoring devices;
    i. All data used to complete the application for this Order; and,
    j. Copies of all reports required by this Order.
    k. Electronic data and information generated by the Supervisory Control And Data Acquisition (SCADA) System.\

8. The flow measurement system shall be calibrated at least once per year or more frequently, to ensure continued accuracy.

9. Monitoring and reporting shall be in accordance with the following:

    a. Samples and measurements taken for the purpose of monitoring shall be representative of the monitored activity.

b. The monitoring and reporting of influent, effluent, and sludge shall be done more frequently as necessary to maintain compliance with this Order and or as specified in this Order.

c. Whenever the Discharger monitors any pollutant more frequently than is required by this Order, the results of this monitoring shall be included in the calculation and reporting of the data submitted in the discharge monitoring report specified by the Executive Officer.

d. A "grab" sample is defined as any individual sample collected in less than 15 minutes.

e. A composite sample is defined as a combination of no fewer than eight individual grab samples obtained over the specified sampling period. The volume of each individual grab sample shall be proportional to the discharge flow rate at the time of sampling. The compositing period shall equal the specific sampling period, or 24 hours, if no period is specified.

f. Daily samples shall be collected on each day of the week.

g. Monthly samples shall be collected on any representative day of each month.

h. Quarterly samples shall be taken on any representative day of January, April, July, and October.

i. Semi-annual samples shall be collected in January and July.

j. Annual samples shall be collected in wet weather during discharging.

II. MONITORING LOCATIONS

The Discharger shall establish the following monitoring locations to demonstrate compliance with the effluent limitations, discharge specifications, and other requirements in this Order:

Table 1 Monitoring Station Locations

Discharge Point Name	Monitoring Location Name	Monitoring Location Description	Latitude and Longitude
001	M-001	Effluent flow to Reach 5 of Temescal Creek at Dissipation Station	33°40’52”N, 117°19’54”W
	M-002	Effluent monitoring at San Jacinto Valley RWRF	33°47’59”N, 117°00’55”W
	M-003	Effluent monitoring at Moreno Valley RWRF	33°52’19”N, 117°12’51”W
	M-004A	Effluent monitoring at Perris Valley RWRF plant 1	33°45’07”N, 117°11’44”W
	M-004B	Effluent monitoring at Perris Valley RWRF plant 2	33°45’19”N, 117°11’39”W
	M-005	Effluent monitoring at Sun City RWRF	33°41’45”N, 117°12’38”W
	M-006	Effluent monitoring at Temescal Valley RWRF	33°30’19”N, 117°10’05”W
	M-007	Effluent monitoring at Santa Rosa WRF	33°31’54”N, 117°11’18”W
--	R-001UA	Receiving surface water – within 100 feet	33°40’50”N, 117°19’53”W

Table 1 Monitoring Station Locations

Discharge Point Name	Monitoring Location Name	Monitoring Location Description	Latitude and Longitude
		upstream of DP 001 in Temescal Creek, when there is flowing water overflowing from Lake Elsinore	
--	R-001UB	Receiving surface water – within 100 feet upstream of DP 001 in Temescal Creek, when there is flowing water from Wasson Canyon stormwater channel	33°40'54"N, 117°19'53"W
--	R-001D	Receiving surface water - within 500 feet downstream of DP 001 in Temescal Creek	33°40'50"N, 117°20'00"W

III. INFLUENT MONITORING REQUIREMENTS – NOT APPLICABLE

Order No. R8-2008-0008 Attachment E specifies influent monitoring requirements for EMWD's five plants, while Order No. 94-92, as amended issued by the San Diego Regional Water Board (Region 9), specifies influent monitoring requirements for the Santa Rosa plant in Region 9.

IV. EFFLUENT MONITORING REQUIREMENTS TO SURFACE WATER

The Discharger shall monitor tertiary effluent at monitoring location as follows. If more than one analytical test method is listed for a given parameter, the Discharger must select from the listed methods and corresponding Minimum Level.

A. Effluent Monitoring Locations M-001

1. The Discharger shall monitor tertiary treated effluent for DP 001 at Monitoring Location M-001 as follows.

Table 2 Tertiary Effluent Monitoring M-001

Parameter	Units	Sample Type	Minimum Sampling Frequency When Discharging	Required Analytical Test Method and Minimum Level, units, respectively
Flow	mgd	Recorder/ Totalizer	Continuous	--
Specific Conductance	µmhos/cm	Recorder	Continuous	--
pH	pH units	Recorder	Continuous	--
Total Chlorine Residual	mg/L	Recorder	Continuous	--
BOD_5	mg/L	Composite	Daily	See Section I.A.3. above, of this MRP
Total Suspended Solids	mg/L	Composite	Daily	See Section I.A.3. above
Ammonia-Nitrogen	mg/L	Grab	Weekly	See Section I.A.3. above, of this MRP

Table 2 Tertiary Effluent Monitoring M-001

Parameter	Units	Sample Type	Minimum Sampling Frequency When Discharging	Required Analytical Test Method and Minimum Level, units, respectively
Temperature	°C	Grab	Weekly	See Section I.A.3. above, of this MRP
Total Dissolved Solids	mg/L	Composite	Monthly	See Section I.A.3. above
Total Inorganic Nitrogen	mg/L	Composite	Monthly	See Section I.A.3. above
Total Nitrogen	mg/L	Composite	Monthly	See Section I.A.3. above
Cyanide, free	µg/L	Grab	Monthly	See Sections I.A.2., I.A.3., above of this MRP and RL 5 g/L
Total Recoverable Selenium	µg/L	Composite	Monthly	See Sections I.A.2., I.A.3. above of this MRP and RL 0.5 g/L
Toxicity	TUc	See Section V.A, Below	Monthly	See Section V, Below
Bis (2-Ethylhexyl) Phthalate	µg/L	Grab	Monthly	See Sections I.A.2., I.A.3., above of this MRP
Dichlorobromomethane	µg/L	Grab	Monthly	See Sections I.A.2., I.A.3., above of this MRP
Total Hardness	mg/L	Composite	Monthly	See Section I.A.3. above
Bicarbonate	mg/L	Composite	Monthly	See Section I.A.3. above, of this MRP
Boron	mg/L	Composite	Monthly	See Section I.A.3. above
Calcium	mg/L	Composite	Monthly	See Section I.A.3. above
Carbonate	mg/L	Composite	Monthly	See Section I.A.3. above
Chloride	mg/L	Composite	Monthly	See Section I.A.3. above
Fluoride	mg/L	Composite	Monthly	See Section I.A.3. above, of this MRP
Magnesium	mg/L	Composite	Monthly	See Section I.A.3. above
Sodium	mg/L	Composite	Monthly	See Section I.A.3. above
Sulfate	mg/L	Composite	Monthly	See Section I.A.3. above
Total Recoverable Cadmium	µg/L	Composite	Monthly	See Sections I.A.2., I.A.3., above of this MRP and RL 0.5 g/L
Chromium (VI) or Total Chromium1	µg/L	Composite	Monthly	See Sections I.A.2., I.A.3. above of this MRP and RL 5 g/L, Total Cr, RL 2 g/L
Total Recoverable Lead	µg/L	Composite	Monthly	See Sections I.A.2., I.A.3. above of this MRP and RL 2 g/L
Total Recoverable Mercury	µg/L	Composite	Monthly	See Sections I.A.2., I.A.3. above of this MRP and RL 0.05 g/L
Total Recoverable Silver	µg/L	Composite	Monthly	See Sections I.A.2., I.A.3., above of this MRP and RL 1

[1] *If Total Chromium test result is greater than 11 µg/L, the following sample shall be tested for Chromium VI, until directed otherwise.*

Table 2 Tertiary Effluent Monitoring M-001

Parameter	Units	Sample Type	Minimum Sampling Frequency When Discharging	Required Analytical Test Method and Minimum Level, units, respectively
				g/L
Total Recoverable Zinc	µg/L	Composite	Monthly	See Sections I.A.2., I.A.3., above of this MRP
Total Recoverable Copper	µg/L	Composite	Monthly	See Sections I.A.2., I.A.3., above of this MRP
Aluminum	mg/L	Composite	Quarterly	See Section I.A.3. above
Antimony	mg/L	Composite	Quarterly	See Sections I.A.2., I.A.3., above of this MRP
Arsenic	µg/L	Composite	Quarterly, (See IV.A.2., below)	See Section I.A.3. above
Barium	µg/L	Composite	Quarterly, (See IV. A.2., below)	See Section I.A.3. above
Cobalt	µg/L	Composite	Quarterly (See IV.A.2., below)	See Section I.A.3. above,
Total Recoverable Nickel	µg/L	Composite	Quarterly (See IV.A.2., below)	See Section I.A.3. above,
Volatile organic portion of remaining EPA Priority Pollutants (See Attachment G)	µg/L	Grab	Annually in wet Season(See IV.A.3., below)	See Sections I.A.2., I.A.3., above of this MRP
Remaining EPA Priority Pollutants (See Attachment G)	µg/L	Composite	Annually in wet season (See IV.A.3., below)	See Sections I.A.2., I.A.3., above of this MRP

2. The Discharger shall monitor tertiary treated effluent for DP 001 at Monitoring Location M-002 to M-007 as follows.

Table 3 Tertiary Effluent Monitoring M-002 to M-007

Parameter	Units	Sample Type	Minimum Sampling Frequency When Discharging	Required Analytical Test Method and Minimum Level, units, respectively
Turbidity[2]	NTU	Recorder	Continuous	--
Coliform Organisms[3]	MPN per 100 ml[4]	Grab	Daily	See Section I.A.3., above of this MRP
CT	mg-minutes/L	Recorder	Continuous[5]	--

[2] *Turbidity analysis shall be continuous, performed by a continuous recording turbidimeter. Compliance with the daily average operating filter effluent turbidity shall be determined by averaging the levels of recorded turbidity taken at a minimum of four-hour intervals over a 24-hour period. The results of the daily average turbidity determinations shall be reported monthly.*

[3] *Samples for total coliform bacteria shall be collected daily. Samples shall be taken from the disinfected effluent.*

[4] *MPN/100mL = Most Probable Number per 100 milliliters.*

[5] *The CT and modal contact time shall be continuously calculated and recorded. The minimum daily value shall be reported monthly. Modal contact time and CT shall be calculated based on the minimum one-hour average value in a 24-hr period.*

3. The monitoring frequency for those priority pollutants that are detected during the required quarterly monitoring at a concentration greater than the concentration specified for that pollutant[6] in Attachment I - Triggers for Monitoring Priority Pollutants shall be accelerated to monthly. To return to the monitoring frequency specified, the Discharger shall request and receive approval from the Regional Water Board's Executive Officer or designee.

4. The monitoring frequency for those priority pollutants that are detected during the required annual monitoring at a concentration greater than the concentration specified for that pollutant in Attachment I shall be accelerated to quarterly for one year. To return to the specified monitoring frequency, the Discharger shall request and receive approval from the Regional Water Board's Executive Officer or designee.

B. Secondary Effluent Monitoring Location at M-001 with 20:1 Dilution

1. The Discharger shall monitor secondary treated effluent at M-001 when 20:1 dilution is provided by the Santa Ana River at the time of the discharge, as follows:

Table 4 Secondary Effluent Monitoring at M-001 with 20:1 Dilution

Parameter	Units	Sample Type	Minimum Sampling Frequency When Discharging	Required Test Method
Flow	mgd	Recorder/Totalizer	Continuous	--
pH	pH units	Recorder/Totalizer	Continuous	--
Total Chlorine Residual	mg/L	Recorder	Continuous	--
BOD_5	mg/L	Grab	Daily (when discharging)	See Section I.A.3., above, of this MRP
Total Dissolved Solids	mg/L	Grab	when discharging	"
Suspended Solids	mg/L	Grab	Daily (when discharging)	See Sections I.A.2., I.A.3. & I.B., above of this MRP
Total Hardness	mg/L	Grab	When discharge	See Section I.A.3., above, of this MRP
EPA Priority Pollutants	µg/L	Grab	Annually in wet season [7] (See IV.A.3., above)	See Sections I.A.2., I.A.3. & I.B., above of this MRP

[6] *For those priority pollutants without specified criteria values, accelerated monitoring is not required.*

[7] *Sample is collected during the first 30 days of discharge, once a year.*

2. The Discharger shall monitor secondary treated effluent at M-002 to M-006 when 20:1 dilution is provided by the Santa Ana River at the time of the discharge, as follows:

Table 5 Secondary Effluent Monitoring at M-002 to M-006 with 20:1 Dilution

Parameter	Units	Sample Type	Minimum Sampling Frequency	Required Test Method
Coliform Organisms	MPN per 100 ml[8]	Grab	Daily (when discharging)	See Sections I.A.2., I.A.3. & I.B., above of this MRP

V. WHOLE EFFLUENT TOXICITY TESTING REQUIREMENTS

A. Toxicity Monitoring Requirements at M-001

1. The Discharger shall conduct critical life stage chronic toxicity testing in accordance with Method 1002.0 - Survival and Reproduction test for water flea, Ceriodaphnia dubia as specified in "Short-term Methods for Estimating the Chronic Toxicity of Effluents and Receiving Waters to Freshwater Organisms", Fourth Edition, Environmental Monitoring Systems Laboratory, U.S. Environmental Protection Agency 2002, Cincinnati, Ohio (October 2002, EPA-821-R-02-013).

2. The Discharger shall establish procedures to ensure that the toxicity testing laboratory notifies the Discharger of the results of toxicity testing by the end of the next business day following the completion of such tests.

3. A minimum of one monthly chronic toxicity test shall be conducted on representative composite samples.

4. The Discharger shall increase the frequency of chronic toxicity testing to every two weeks whenever any test result exceeds 1.0 TUc. The first test under the accelerated schedule shall be conducted within two weeks of receiving notice of the test that exceeds 1.0 TUc, and every two weeks thereafter. The Discharger may resume the regular test schedule when two consecutive chronic toxicity tests result in 1.0 TUc, or when the results of the Initial Investigation Reduction Evaluation conducted by the Discharger have adequately addressed the identified toxicity problem.

5. The presence of chronic toxicity shall be estimated as specified in Short-Term Methods for Estimating the Chronic Toxicity of Effluents and Receiving Waters to Freshwater Organisms. Fourth Edition. EPA-821-R-02-013.

---

[8] *MPN/100mL = Most Probable Number per 100 milliliters*

6. Results for both survival and reproduction endpoints shall be reported in TUc, where TUc = 100/NOEC or 100/ICp or ECp (p is the percent effluent). The no observed effect concentration (NOEC) is the highest concentration of toxicant to which organisms are exposed in a chronic test, that causes no observable adverse effect on the tests organisms (e.g., the highest concentration of toxicant to which the values for the observed responses are not statistically significant different from the controls). The inhibition concentration (IC) is a point estimate of the toxicant concentration that causes a given percent reduction in a non-quantal biological measurement (e.g., reproduction or growth) calculated from a continuous model (the EPA Interpolation Method). The effective concentration (EC) is a point estimate of the toxicant concentration that would cause a given percent reduction in quantal biological measurement (e.g., larval development, survival) calculated from a continuous model (e.g., probit).

7. Additional Testing Requirements

   a. A series of at least five dilutions and a control will be tested. Five dilutions of the series shall be within 60% to 100% effluent concentration.
   b. If organisms are not cultured in-house, concurrent testing with reference toxicants shall be conducted. Where organisms are cultured in-house, monthly reference toxicant testing is sufficient. Reference toxicants shall also be conducted using the same test conditions as the effluent toxicity test (e.g., same test duration, etc).
   c. If either of the reference toxicant test or the effluent tests do not meet all test acceptability criteria as specified in the manual[9], then the Discharger must re-sample and re-test within 14 days or as soon as the Discharger receives notification of failed tests.
   d. Control and dilution water should be receiving water or lab water, as appropriate, as described in the manual. If the dilution water used is different from the culture water, a second control, using culture water shall also be used.

8. Quality Assurance/Control:

   a. A quality assurance/quality control (QA/QC) program shall be instituted to verify the results of the effluent toxicity monitoring program. The QA/QC program shall include but shall not be limited to the following: (1) Selection of an independent testing laboratory; (2) Approval by the Regional Board's Executive Officer or Executive Officer's designee of the independent testing laboratory; (3) Once during the year, the Discharger shall split samples with the independent laboratory for conducting chronic toxicity testing; (4) Results from the independent laboratory shall be submitted to the Regional Board and the Discharger for evaluation; (5) The Discharger shall review the test acceptability criteria in accordance with the EPA test protocols, Short-Term Methods for Estimating the Chronic Toxicity of Effluents and Receiving Waters to Freshwater Organisms. Fourth Edition. EPA-821-R-02-013.

---

[9] *Refers to USEPA Manual "Short-Term Methods for Estimating the Chronic Toxicity of Effluents and Receiving Waters to Freshwater Organisms. - 4th Ed., October 2002, EPA-821-R-02-013.*

b. Results from the independent laboratory of the annual QA/QC split samples are to be used for Quality Assurance/Quality Control (QA/QC) purposes only and not for purposes of determining compliance with other requirements of this Order.

9. The use of alternative methods for measuring chronic toxicity may be considered by the Executive Officer on a case–by-case basis. The use of a different test species, in lieu of conducting the required test species may be considered and approved by the Executive Officer on a case-by case basis upon submittal of the documentation supporting Discharger's determination that a different species is more sensitive and appropriate.

10. Reporting: Results of all toxicity testing conducted within the month following the reporting period shall be submitted monthly in accordance with "Short-Term Methods for Estimating the Chronic Toxicity of Effluents and Receiving Waters to Freshwater Organisms. Fourth Edition. EPA-821-R-02-013." The report shall include a determination of the median value of all chronic toxicity testing results conducted during the two previous months.

11. Whenever an Initial Investigation Reduction Evaluation is conducted, the results of the evaluation shall be submitted upon completion. In addition, monthly status reports shall be submitted as part of the Discharger's monitoring report for the previous month.

VI. LAND DISCHARGE MONITORING REQUIREMENTS – NOT APPLICABLE

VII. RECLAMATION MONITORING REQUIREMENTS- NOT APPLICABLE

VIII. RECEIVING WATER MONITORING REQUIREMENTS – SURFACE WATER AND GROUNDWATER

A. Monitoring During 20:1 Dilution:

The Discharger shall make provisions for the measurement of the receiving water flow at a suitable location in Temescal Creek and determine whether a 20:1 dilution exists at the point of discharge before discharging secondary treated effluent. A dilution of 20:1 or more exclusive of discharges to surface waters from upstream publicly owned treatment works is required at the point of discharge for the discharge of secondary effluent. Flow measurements shall be made prior to any direct discharge to Temescal Creek and shall continue on a daily basis until the discharge is terminated.

B. Monitoring Location R-001U for Surface Water

1. The Discharger shall monitor upstream of the discharge at R-001U for the following parameters/constituents when there is flowing water:

Table 6 Receiving Water Monitoring Requirements at R-001U

Parameter	Units	Sample Type	Minimum Sampling Frequency	Required Analytical Test Method
Flow	mgd	estimate	Weekly	--
Dissolved Oxygen	mg/L	Grab	Weekly	See Sections I.A.3. above of this MRP
Temperature	^{0}C	"	Weekly	See Sections I.A.3. above of this MRP
pH	pH unit	Grab	Weekly	See Sections I.A.3. above of this MRP
Total Dissolved Solids	mg/L	Grab	Monthly	See Sections I.A.3. above of this MRP
Total Inorganic Nitrogen	mg/L	Grab	Monthly	See Sections I.A.3. above of this MRP
Total Hardness	mg/L	Grab	Quarterly	See Sections I.A.3. above of this MRP

C. Monitoring Location R-001D for Surface Water:

1. The Discharger shall monitor the receiving water at R-001D when there is flowing water upstream of the discharge point for the following constituents:

Table 7 Receiving Water Monitoring at R-001D

Parameter	Units	Sample Type	Minimum Sampling & Testing Frequency	Required Analytical Test Method
Dissolved Oxygen	mg/L	Grab	Weekly	See Section I.A.3., above, of this MRP
Temperature	^{0}C	Grab	Weekly	See Section I.A.3., above, of this MRP
pH	pH unit	Grab	Weekly	"
Color change, foam, deposition of material, odor	--	Observe	Weekly	See Section I.A.3., above, of this MRP
Total Hardness	mg/L	Grab	Quarterly	See Sections I.A.3. above of this MRP
Total Suspended Solids	mg/L	Grab	Quarterly	"
EPA Priority Pollutants (see VIII.C.2., below)	µg/L	Grab	Annually	"

2. For the annual monitoring of the heavy metals EPA Priority Pollutants, the total recoverable and total dissolved metal concentration shall also be determined.

D. Regional Monitoring for Fish Flesh Testing:

Unless otherwise directed by the Regional Water Board Executive Officer, the Discharger shall implement the approved plan for the annual sampling and testing of mercury levels in fish flesh samples collected from the Santa Ana River. The frequency of monitoring and submission of reports shall be as stipulated in the approved plan.

E. Monitoring Requirements for Groundwater – Not Applicable

IX. OTHER MONITORING REQUIREMENTS

A. Biosolids Monitoring – Not Applicable

Biosolids monitoring requirements are established in Order No. R8-2008-0008.

B. Stormwater Monitoring

The Discharger shall monitor discharges at Discharge Points S-01 through S-12 (as specified in Table 2 of the Order) and submit monitoring reports in accordance with Attachments J and K - Stormwater Monitoring and Reporting Requirements.

C. Water Supply Monitoring

The Discharger shall report monthly the RWRFs (and RCWD Santa Rosa WRF) facility-wide flow weighted TDS water supply quality. The Discharger shall provide the necessary calculations showing the facility-wide TDS water supply quality.

D. Pretreatment Monitoring and Reporting – Not Applicable

Pretreatment monitoring and reporting requirements are specified in Order No. R8-2008-0008.

E. TDS/TIN Offset Program Monitoring and Reporting

Every quarter, the Discharger shall report the TDS/TIN removal accomplished pursuant to the offset program, or approved alternative, and demonstrate whether or not offset requirements are being met. The Discharger shall report a running balance of TDS/TIN discharges compared to TDS/TIN offset removal. If offset is not occurring during the quarterly monitoring period, the quarterly report shall so state and identify when the offset will be achieved.

X. REPORTING REQUIREMENTS

A. General Monitoring and Reporting Requirements

1. The Discharger shall comply with all Standard Provisions (Attachment D) related to monitoring, reporting, and recordkeeping.
2. All analytical data shall be reported with method detection limit[10] (MDLs) and with identification of either reporting level or limits of quantitation (LOQs). Quality assurance/quality control data shall be submitted upon request. Test results shall be reported in either milligrams/liter (mg/L) or micrograms/liter (µg/L), or nanograms/L (ng/L), as appropriate.
3. For effluent wastewater monitoring:
   a. The Discharger shall require its testing laboratory to calibrate the analytical system down to the minimum level (ML)[11] specified in Attachment H for priority pollutants with effluent limitations in this Order, unless an alternative minimum level is approved by the Regional Water Board's Executive Officer. When there is more than one ML value for a given substance, the Discharger shall use the ML values, and their associated analytical methods, listed in Attachment H that are below the calculated effluent limitation. The Discharger may select any one of those cited analytical methods for compliance determination. If no ML value is below the effluent limitation, then the lowest ML value and its associated analytical method, listed in Attachment H shall be used. Any internal quality control data associated with the sample must be reported when requested by the Executive Officer. The Regional Water Board will reject the quantified laboratory data if quality control data is unavailable or unacceptable.
   b. The Discharger shall report the results of analytical determinations for the presence of chemical constituents in a sample using the following reporting protocols:
      1) Sample results greater than or equal to the reported ML shall be reported as measured by the laboratory (i.e., the measured chemical concentration in the sample).

---

[10] *The standardized test procedure to be used to determine the method detection limit (MDL) is given at Appendix B, 'Definition and Procedure for the Determination of the Method Detection Limit' of 40 CFR 136.*

[11] *Minimum level is the concentration at which the entire analytical system must give a recognizable signal and acceptable point. The ML is the concentration in a sample that is equivalent to the concentration of the lowest calibration standard analyzed by a specific analytical procedure, assuming that all the method specified sample weights, volumes, and processing steps have been followed.*

2) Sample results less than the reported ML, but greater than or equal to the laboratory's current Method Detection Limit (MDL)[12], shall be reported as "Detected, but Not Quantified," or "DNQ." The estimated chemical concentration of the sample shall also be reported.

3) Sample results not detected above the laboratory's MDL shall be reported as "not detected" or "ND."

4. For receiving water monitoring and for those priority pollutants without effluent limitations, the Discharger shall require its testing laboratory to quantify constituent concentrations to the lowest achievable MDL as determined by the procedure found in 40 CFR 136 (revised as of April 11, 2007). In situations where the most stringent applicable receiving water objective (freshwater or human health (consumption of organisms only), as specified for that pollutant in 40 CFR 131.38[13] is below the minimum level value specified in Attachment H and the Discharger cannot achieve an MDL value for that pollutant below the ML value, the Discharger shall submit justification why a lower MDL value cannot be achieved. Justification shall be submitted together with monthly monitoring reports.

5. For non-priority pollutants monitoring, all analytical data shall be reported with method detection limits, as determined by the procedure found in 40 CFR 136 (revised as of April 11, 2007).

6. Any internal quality control data associated with the sample must be reported when requested by the Executive Officer. The Regional Water Board will reject the quantified laboratory data if quality control data is unavailable or unacceptable.

7. Discharge monitoring data shall be submitted in a format acceptable by the Regional Water Board. Specific reporting format may include preprinted forms and/or electronic media. The results of all monitoring required by this Order shall be reported to the Regional Water Board, and shall be submitted in such a format as to allow direct comparison with the limitations and requirements of this Order.

8. The Discharger shall tabulate the monitoring data to clearly illustrate compliance and/or noncompliance with the requirements of the Order.

9. The Discharger shall submit to the Regional Water Board reports necessary to determine compliance with effluent limitations in this Order and shall follow the chemical nomenclature and sequential order of priority pollutant constituents shown in Attachment G – Priority Pollutant Lists for reporting the required annual priority pollutant monitoring.

10. The reports for June and December shall include a roster of the recycled water system operators and plant personnel, including job titles, duties, and level of State certification for each individual.

---

[12] *MDL is the minimum concentration of a substance that can be measured and reported with 99 percent confidence that the analytical concentration is greater than zero, as defined in 40 CFR 136, Appendix B, revised as of April 11, 2007.*

[13] *See Federal Register/ Vol. 65, No. 97 / Thursday, May 18, 2000 / Rules and Regulations.*

11. The Discharger shall report monitoring results for specific parameters in accordance with the following table:

Table 8 Reporting Requirements

Parameter	Measurement
Flow	Daily total flow
pH	Daily High and daily low
Total Residual Chlorine	Daily Maximum
Electrical Conductivity	Daily High
Turbidity	Daily maximum

B. Self Monitoring Reports (SMRs)

1. At any time during the term of this permit, the State or Regional Water Board may notify the Discharger to electronically submit Self-Monitoring Reports (SMRs) using the State Water Board's California Integrated Water Quality System (CIWQS) Program Web site (http://www.waterboards.ca.gov/ciwqs/index.html). Until such notification is given, the Discharger shall submit hard copy SMRs. The CIWQS Web site will provide additional directions for SMR submittal in the event there will be service interruption for electronic submittal.

2. The Discharger shall report in the SMR the results for all monitoring specified in this MRP under Sections III through IX. Additionally, the Discharger shall report in the SMR the results of any special studies, acute and chronic toxicity testing, TRE/TIE, PMP, and Pollution Prevention Plan required by Special Provisions – VI.C. of this Order. The Discharger shall submit monthly, quarterly, and annual SMRs including the results of all required monitoring using USEPA-approved test methods or other test methods specified in this Order. If the Discharger monitors any pollutant more frequently than required by this Order, the results of this monitoring shall be included in the calculations and reporting of the data submitted in the SMR.

3. Monitoring periods and reporting for all required monitoring shall be completed according to the following schedule during wet weather:

Table 9 Monitoring Periods and Reporting Schedule

Sampling Frequency	Monitoring Period Begins On	Monitoring Period	SMR Due Date
Continuous	The effective day of this Order	All	Submit with monthly SMR
Daily	The effective day of this Order	(Midnight through 11:59 PM) or any 24-hour period that reasonably represents a calendar day for purposes of sampling.	Submit with monthly SMR
Weekly	The effective day of this Order	Sunday through Saturday	Submit with monthly SMR
Monthly	First day of calendar month following permit effective date or on permit date if that date is	1st day of calendar month through last day of calendar month	First day of the second month following the reporting period, submit as monthly SMR

Table 9 Monitoring Periods and Reporting Schedule

Sampling Frequency	Monitoring Period Begins On	Monitoring Period	SMR Due Date
	first day of the month		
Quarterly[14]	Closest of January 1, April 1, July 1, or October 1 following permit effective date	January 1 through March 31, samples are collected in January; April 1 through June 30; samples are collected in April; July 1 through September 30; samples are collected in July; October 1 through December 31; samples are collected in October	First day of the second month following the reporting period, submit with monthly SMR
Annually	The effective day of this Order	During discharge in wet seasons	April 1 each year including report requirements in Attachments

4. Reporting Protocols. The Discharger shall report with each sample result the applicable reported Minimum Level (ML) and the current Method Detection Limit (MDL), as determined by the procedure in Part 136.

   The Discharger shall report the results of analytical determinations for the presence of chemical constituents in a sample using the following reporting protocols:

   a. Sample results greater than or equal to the reported ML shall be reported as measured by the laboratory (i.e., the measured chemical concentration in the sample).

   b. Sample results less than the RL, but greater than or equal to the laboratory's MDL, shall be reported as "Detected, but Not Quantified," or DNQ. The estimated chemical concentration of the sample shall also be reported.

   c. For the purposes of data collection, the laboratory shall write the estimated chemical concentration next to DNQ as well as the words "Estimated Concentration" (may be shortened to "Est. Conc."). The laboratory may, if such information is available, include numerical estimates of the data quality for the reported result. Numerical estimates of data quality may be percent accuracy (+ a percentage of the reported value), numerical ranges (low to high), or any other means considered appropriate by the laboratory.

   d. Sample results less than the laboratory's MDL shall be reported as "Not Detected," or ND.

   e. Dischargers are to instruct laboratories to establish calibration standards so that the ML value (or its equivalent if there is differential treatment of samples relative to calibration standards) is the lowest calibration standard. At no time is the

[14] *Quarterly monitoring result for certain constituents may be used to satisfy the annual monitoring for the same constituents.*

Discharger to use analytical data derived from extrapolation beyond the lowest point of the calibration curve.

5. The Discharger shall submit hard copy SMRs (with an original signature) when required by subsection B.1 above in accordance with the following requirements:
   a. The Discharger shall arrange all reported data in a tabular format. The data shall be summarized to clearly illustrate whether the facility is operating in compliance with interim and/or final effluent limitations.
   b. The Discharger shall attach a cover letter to the SMR. The information contained in the cover letter shall clearly identify violations of the WDRs; discuss corrective actions taken or planned; and the proposed time schedule for corrective actions. Identified violations must include a description of the requirement that was violated and a description of the violation.
   c. SMRs must be submitted to the Regional Water Board, signed and certified as required by the Standard Provisions (Attachment D), to the address listed below:

      California Regional Water Quality Control Board
      Santa Ana Region
      3737 Main Street, Suite 500
      Riverside, CA 92501-3348
6. The Discharger shall attach a cover letter to the SMR. The information contained in the cover letter shall clearly identify violations of the WDRs; discuss corrective actions taken or planned; and the proposed time schedule for corrective actions. Identified violations must include a description of the requirement that was violated and a description of the violation.
7. By April 1 of each year, the Discharger shall submit an annual report to the Regional Water Board. The annual report shall include the following:
   a. Tabular and graphical summaries of the monitoring data obtained during the previous year;
   b. A discussion of the compliance record and the corrective actions taken or planned, which may be needed to bring the discharge into full compliance with the waste discharge requirements;
   c. A summary of the quality assurance (QA) activities for the previous year; and
   d. For priority pollutant constituents that do not have effluent limitations but are required to be monitored, the Discharger shall evaluate the monitoring data obtained during the previous year and determine whether detected constituents are at levels that would warrant reopening the permit to include effluent limitations for such constituent(s). To conduct this evaluation, the concentration of detected constituents shall be compared to the most stringent applicable receiving water objectives (freshwater or human health (consumption of organisms only) as specified for that pollutant in 40 CFR 131.38[15]). The Discharger shall include a discussion of the corrective actions taken or planned to address values above receiving water objectives.

[15] *See Federal Register/ Vol. 65, No. 97 / Thursday, May 18, 2000 / Rules and Regulations.*

C. Discharge Monitoring Reports (DMRs)

1. As described in Section X.B.1 above, at any time during the term of this permit, the State or Regional Water Board may notify the Discharger to electronically submit SMRs that will satisfy federal requirements for submittal of Discharge Monitoring Reports (DMRs). Until such notification is given, the Discharger shall submit DMRs in accordance with the requirements described below.

2. DMRs must be signed and certified as required by the standard provisions (Attachment D). The Discharger shall submit the original DMR and one copy of the DMR to the address listed below:

Table 10 Monitoring Reporting Submittal

Standard Mail	FedEx/UPS/ Other Private Carriers
State Water Resources Control Board Division of Water Quality c/o DMR Processing Center PO Box 100 Sacramento, CA 95812-1000	State Water Resources Control Board Division of Water Quality c/o DMR Processing Center 1001 I Street, 15th Floor Sacramento, CA 95814

3. All discharge monitoring results must be reported on the official USEPA pre-printed DMR forms (EPA Form 3320-1). Forms that are self-generated will not be accepted unless they follow the exact same format of EPA Form 3320-1.

   Regional Administrator
   U. S. Environmental Protection Agency
   Region 9 – Attention WTR – 7
   75 Hawthorne Street
   San Francisco, CA 94105

D. Other Reports

1. The Discharger shall report the results of any special studies, acute and chronic toxicity testing, TRE/TIE, PMP, and Pollution Prevention Plan required by Special Provisions – VI.C. of this Order. The Discharger shall submit reports with the first monthly SMR scheduled to be submitted on or immediately following the report due date in compliance with SMR reporting requirements described in subsection X.B.5 above.

Attachment F – Fact Sheet

TABLE OF CONTENTS

Attachment F – Fact Sheet F-3
I. Permit Information F-4
II. Facility Description F-7
A. Description of Wastewater and Biosolids Treatment or Controls F-7
1. Facility Background F-7
2. Design Characteristics and Biosolids Treatment F-8
B. Discharge Points and Receiving Waters F-10
C. Summary of Previous Requirements and Self-Monitoring Report (SMR) Data F-11
D. Compliance Summary F-12
E. Planned Changes F-14
III. Applicable Plans, Policies, and Regulations F-17
A. Legal Authorities F-17
B. California Environmental Quality Act (CEQA) F-17
C. State and Federal Regulations, Policies, and Plans F-17
D. Impaired Water Bodies on CWA 303d) List – Not Applicable F-20
E. Other Plans, Polices and Regulations-Not Applicable F-20
IV. Rationale For Effluent Limitations and Discharge Specifications F-20
A. Discharge Prohibitions F-20
B. Technology-Based Effluent Limitations F-21
1. Scope and Authority F-21
2. Applicable Technology-Based Effluent Limitations F-21
C. Water Quality-Based Effluent Limitations (WQBELs) for DP 001 ..... F-22
1. Scope and Authority F-22
2. Applicable Beneficial Uses and Water Quality Criteria and Objectives F-22
3. Determining the Need for WQBELs F-25
4. WQBEL Calculations F-28
5. Whole Effluent Toxicity (WET) F-31
D. Best Professional Judgment-Based Effluent Specifications for DP 001 ..... F-31
E. Summary of Final Effluent Limitations for DP 001 ..... F-32
1. Satisfaction of Anti-Backsliding Requirements F-32
2. Satisfaction of Antidegradation Policy F-33
3. Stringency of Requirements for Individual Pollutants F-33
4. Summary of Final Effluent Limitations for DP 001 ..... F-33
F. Interim Effluent Limitations for DP 001 - Not Applicable F-34
G. Land Discharge Specifications – Not Applicable F-34
H. Reclamation Specifications – Not Applicable F-34
I. Stormwater Discharge Requirements F-34
II. Rationale for Receiving Water Limitations F-35
A. Surface Water F-35
B. Groundwater – Not Applicable F-35
III. Rationale for Monitoring and Reporting Requirements F-35
A. Influent Monitoring F-35

B. Effluent Monitoring F-35
C. Receiving Water Monitoring F-36
1. Surface Water F-36
2. Groundwater - Not Applicable F-36
D. Other Monitoring Requirements F-36
IV. Rationale for Provisions F-36
A. Standard Provisions F-36
B. Special Provisions F-37
1. Reopener Provisions F-37
2. Special Studies and Additional Monitoring Requirements F-37
3. Best Management Practices and Pollution Prevention F-37
4. Construction, Operation, and Maintenance Specifications – Not Applicable F-37
5. Special Provisions for Municipal Facilities, POTWs Only – Not Applicable F-37
6. Other Special Provisions – Not Applicable F-37
7. Compliance Schedules – Not Applicable F-37
VI. Public Participation F-38
A. Notification of Interested Parties F-38
B. Written Comments F-38
C. Public Hearing F-38
D. Waste Discharge Requirements Petitions F-39
E. Information and Copying F-39
F. Register of Interested Persons F-39
G. Additional Information F-39

List of Tables

Table 1. Facility Information F-4
Table 2. Treatment Processes and Treatment Trains F-8
Table 3. Discharge Points and Receiving Waters F-10
Table 4. Historic Effluent Limitations and Monitoring Data F-11
Table 5. Compliance Status F-13
Table 6. Basin Plan Beneficial Uses F-18
Table 7. Summary of Technology-Based Effluent Limits for Secondary Treatment F-22
Table 8. Applicable Basin Plan Surface Water Quality Objectives F-23
Table 9. RPA Evaluation for DP 001 ..... F-26
Table 10. Recalculated Acute and Chronic Aluminum Criteria Values (µg Total Aluminum/L) for the Arid West (includes the Santa Ana River) F-27
Table 11. Cyanide Calculation of Effluent limits at DP 001 ..... F-30
Table 12. Calculations of Effluent limits for Hg and Se at DP 001 ..... F-31
Table 13. Tertiary Effluent BOD_5 and TSS Limits F-31
Table 14. Summary of Water Quality-Based Effluent Limits at DP 001 ..... F-33

ATTACHMENT F – FACT SHEET

As described in Section II of this Order, this Fact Sheet includes the legal requirements and technical rationale that serve as the basis for the requirements of this Order.

This Order has been prepared under a standardized format to accommodate a broad range of discharge requirements for Dischargers in California. Only those sections or subsections of this Order that are specifically identified as “not applicable” have been determined not to apply to this Discharger. Sections or subsections of this Order not specifically identified as “not applicable” are fully applicable to this Discharger.

I. PERMIT INFORMATION

The following table summarizes administrative information related to the facility.

Table 1. Facility Information

WDID	**8 332303001**					
Discharger/Operator	Eastern Municipal Water District (EMWD)					EMWD/Rancho California Water District
Name of Facility	Regionwide Water Recycling System -Temescal Creek Discharge					
	San Jacinto Valley RWRF[1]	Moreno Valley RWRF	Perris Valley RWRF	Sun City RWRF	Temecula Valley[2] RWRF	Santa Rosa Water Reclamation Facility[2]
Facility Address	770 North Sanderson Avenue	17140 Kitching Street	1301 Case Road	29285 Valley Blvd.	42565 Avenida Alvarado	26266 Washington Ave,
	San Jacinto, CA 92583	Moreno Valley, CA 92553	Perris, CA 92570	Sun City, CA 92586	Temecula, CA 92590	Murrieta, CA 92562
	Riverside County					
Facility Contact, Title and Phone	Jayne Joy, Director of Environment & Regulation Compliance, (951) 928-3777 ext. 6241					
Authorized Person to Sign and Submit Reports	Anthony Pack, General Manager, (951) 928-3777 ext. 6109 Jayne Joy, (951) 928-3777 ext. 6241					
Mailing Address	2270 Trumble Road, Perris, CA 92570					
Billing Address	EMWD, PO BOX 8300, Perris, CA 92572-8300					
Major or Minor Facility	Major					
Type of Facility	POTW					
Threat to Water Quality	1					
Complexity	A					
Pretreatment Program	N[3]					

Table 1. Facility Information

Reclamation Requirements	N[3]
Facility Permitted Flow	52.5 million gallons per day (mgd)
Facility Design Flow	72 mgd
Receiving Water	Reach 5 of Temescal Creek and Reach 3 of Santa Ana River.
Receiving Water Type	Inland Surface Water
Watershed	Santa Ana

1 *RWRF means Regional Water Reclamation Facility*

2 *Temecula Valley RWRF and Santa Rosa WRF are regulated by the San Diego Regional Water Quality Control Board.*

3 *Waste Discharge Requirements Order No. R8-2008-0008 issued to the Discharger for discharges to land from its five regional water reclamation facilities include reclamation and pretreatment requirements.*

A. Eastern Municipal Water District (hereinafter Discharger, or EMWD) is the owner and operator of a pipeline (hereinafter Facility) that links to a single regionwide water recycling system connecting the five Regional Water Reclamation Facilities operated by EMWD. This pipeline ultimately discharges into Temescal Creek.

For the purposes of this Order, references to the "discharger" or "permittee" in applicable federal and State laws, regulations, plans, or policies are held to be equivalent to references to the Discharger herein.

B. The Facility discharges treated wastewater to Reach 5 of Temescal Creek, a tributary to Reach 3 of Santa Ana River during wet weather conditions when recycled water supply exceeds the demand for recycled water use and the capacities of recycled water storage/disposal ponds located at each RWRF facility and at the Winchester Disposal Ponds[4] cannot accommodate additional recycled water flows. Both Temescal Creek and the Santa Ana River are waters of the United States. Neither Temescal Creek nor the Santa Ana River is naturally perennial. In dry weather, the flow in these water bodies is comprised predominantly of effluent discharges from municipal wastewater treatment facilities and very little natural flow exists. The Facility discharges, and stormwater discharges from each RWRF that is within the Santa Ana Regional Water Board jurisdiction, are currently regulated by Order No. R8-2004-0065, NPDES No. CA8000188, which was adopted on November 5, 2004 and will expire on November 1, 2009. On November 18, 2005, Order No. R8-2004-0065 was amended by Order No. R8-2005-0078 to include tertiary recycled water discharges from Rancho California Water District (RCWD)'s Santa Rosa Water Reclamation Facility (SRWRF) to the Discharger's regionwide water recycling system. The amendment also included requirements for the discharge of secondary treated and disinfected wastewater to surface waters when at least 20:1 dilution can be provided by the natural receiving waters.

C. The Discharger filed a report of waste discharge and submitted an application for renewal of its Waste Discharge Requirements (WDRs) and National Pollutant Discharge Elimination System (NPDES) permit on December 26, 2008. Supplemental information was requested starting January 23, 2009. The latest supplemental information was received on March 20, 2009. A site visit was conducted on February 10, 2009, to observe operations and collect additional data to develop permit limitations and conditions. The application was deemed complete on March 20, 2009.

---

4 *The Winchester Disposal/storage ponds are used primarily for disposal and storage of treated effluent from the Temecula Valley RWRF and SRWRF.*

II. FACILITY DESCRIPTION

A. Description of Wastewater and Biosolids Treatment or Controls

1. Facility Background

EMWD encompasses approximately 555 square miles of the western portion of Riverside County and services 630,000 people. The sewer collection systems in the service areas belong to EMWD, the cities of Perris, Hemet, San Jacinto, Lake Hemet Municipal Water District, Pechanga[5] and Western Municipal Water District. Wastewater that is generated within these service areas is conveyed to and treated at EMWD's five regional water reclamation facilities (RWRF). These are the San Jacinto Valley RWRF, Moreno Valley RWRF, Perris Valley RWRF, Sun City RWRF, and Temecula Valley RWRF. Four of these RWRFs are within the Santa Ana Regional Water Board jurisdiction and one (Temecula Valley RWRF) is within the San Diego Regional Water Board's jurisdiction. Order No. R8-2008-0008, which was adopted on September 5, 2008, regulates the discharges from the five facilities into percolation/storage ponds and the use of recycled water within that portion of EMWD's service area that is within the Santa Ana Regional Water Board's jurisdiction. These five plants and the recycled water distribution system form a single, region-wide water reclamation system that includes the option of discharges into Reach 5 of Temescal Creek under wet weather conditions. Stormwater runoff that exceeds the storm water pump station capacity at each EMWD RWRF overflows into nearby storm drains. This Order also regulates discharges of stormwater from the RWRFs, except the Temecula RWRF and SRWRF since the stormwater discharges from these facilities are outside the Santa Ana Regional Water Board jurisdiction.

RCWD encompasses approximately 100,000 acres of land located in the southern part of Riverside County. RCWD services the area known as Rancho California, which includes the City of Temecula, a portion of the City of Murrieta, and other contiguous land in the unincorporated territory of the County of Riverside. Wastewater that is generated in these service areas is conveyed to and treated at the SRWRF, which is owned and operated by RCWD. The SRWRF is within the San Diego Regional Water Board's jurisdiction and is currently regulated by Order No. R9-94-92, with amendments Addendum No. 1, 2. and 3 for the storage and use of recycled water in areas overlying the Murrieta Hydrologic subunit, the downstream portions of the Pauba and Wolf Hydrologic subareas, Auld, Deluz and Walker Hydrologic areas. In 2004, EMWD requested amendment of Order No. R8- 2004-0065 to authorize intermittent discharges from the SRWRF to Temescal Creek via the Palomar pipeline, which is a part of EMWD's region-wide water reclamation system. Order No. R8-2004-0065 was amended in 2005 (Order No. R8-2005-0078) in accordance with this request.

---

[5] *Pechanga is outside the Santa Ana Regional Water Board jurisdiction, however wastewater from this service area goes to the Temecula RWRF.*

Attachment B provides a map of the area around each Reclamation Facility.
Attachment C provides a treatment flow schematic for each Facility.

2. Design Characteristics and Biosolids Treatment

The treatment processes at each RWRF are tabulated as follows:

Table 2. Treatment Processes and Treatment Trains

RWRF	San Jacinto Valley	Moreno Valley	Perris Valley		Sun City[6]	Temecula Valley	Santa Rosa
Plant #	**1**	**1 & 2**	**1**	**2**	**1**	**1 & 2**	**1**
Preliminary Treatment	Screens and Grit removal	Screens and Grit removal (Plant 1 Influent EQ Basin)	Screens and Grit removal			Screens and Grit with Influent EQ Basin	Screens and Grit removal
Primary Treatment	Primary Clarifiers	Primary Clarifiers (Plant 2 Selectors)	Primary Clarifiers	Selectors	Primary Clarifiers w/ Primary EQ Basin	Primary Clarifiers w/ Primary EQ Basin	None
Secondary Treatment	Diffused activated sludge modified for biological nitrification/ denitrification (NDN), secondary clarifiers	Diffused activated sludge modified for biological NDN, secondary clarifiers	Diffused activated sludge, secondary clarifiers	Modified Bardenpho with additional aeration	Diffused activated sludge, secondar y clarifiers	Diffused activated sludge w/ biological NDN, secondary clarifiers	Jet aeration Sequencing Batch Reactors activated sludge w/ biological nitrification/denit rification (NDN)
Secondary EQ Basin[7]	Yes	Yes	No	Yes	No	Yes	Yes
Tertiary Train #	**1**	**1**	**1**	**2**	**N/A**	**1**	**2**
Tertiary Treatment	Coagulant, Filtration (cloth), Chlorination	Coagulant, Filtration (sand), Chlorination	Coagulant, Filtration (cloth), Chlorination	Coagulant, Filtration (sand & cloth), Chlorination	N/A	Coagulant, Filtration (sand & cloth), Chlorination	Coagulant, Tertiary Clarification, Multi-Media Filtration, Chlorination, Dechlorination

6 *The Sun City RWRF is out of service but is used as a lift station.*

7 *Secondary EQ Basin provides for Equalized Tertiary Flow.*

Table 2. Treatment Processes and Treatment Trains

RWRF	San Jacinto Valley	Moreno Valley	Perris Valley		Sun City[6]	Temecula Valley	Santa Rosa
Treatment Capacity[8], mgd	11 Secondary 12.4 Tertiary	16 Secondary 15.8 Tertiary	3 Secondary 2.4 Tertiary	12 Secondary 30 Tertiary	N/A	18 Secondary 22.4 Tertiary	5.0 mgd
Solids Handling	Sludge thickening, Anaerobic digestion, belt press & centrifuge, sludge drying beds and co-generation (future)	Sludge thickening, Anaerobic digestion, belt press & centrifuge, sludge drying beds and Fuel Cell (future)	Aqua belt thickener, Aerobic digestion	Straight Waste, <u>Future:</u> Sludge thickener & Anaerobic digestion	Aqua belt thickener, Aerobic digestion, Belt Press	Sludge thickening, Anaerobic digestion, belt press & centrifuge, sludge drying beds and co-generation (future)	Sludge thickening, Aerobic digestion, belt press, sludge drying beds
			Belt Press & Centrifuge				

8 *Secondary denotes secondary design capacity while tertiary denotes CDPH approved tertiary capacity.*

The total design flow rate from EMWD's five facilities and RCWD SRWRF is 65 mgd. During the 2008 wet season (January to April) the annual average daily discharge flow rate to Temescal Creek was 28.1 mgd and the maximum daily flow rate was 47 mgd. Order No. R8-2004-0065, as amended, authorized the discharge to Temescal Creek of up to 52.5 mgd.

B. Discharge Points and Receiving Waters

Treated wastewater is discharged at Discharge Point (DP) 001, which is located near EMWD's Dissipation Station at 636 Minthorn Street, Lake Elsinore. DP 001 discharges into the Wasson Canyon flood control channel, which is approximately 40 feet upstream from the confluence of the channel and Reach 5 of Temescal Creek.

The following Table shows the discharge point, longitude and latitude, affected receiving waters, and estimated volume of surface water discharge for treated wastewater (DP 001) and for stormwater discharges from EMWD's RWRFs:

Table 3. Discharge Points and Receiving Waters

Discharge Point No.	Latitude	Longitude	Description and Receiving Water	Flow (MGD) & Frequency
001	33°40'52"N	117°19'54"W	Primary discharge point is approximately 40 feet upstream of confluence of Wasson Canyon flood control channel and Reach 5 of Temescal Creek	Up to 47 mgd, intermittent, seasonal
S-01	33° 47' 59" N	117° 00'26" W	Stormwater from San Jacinto Valley RWRF to storm drain tributary to San Jacinto River	various
S-02	33° 47' 59" N	117° 00'55" W		various
S-03	33° 52' 22" N	117° 12'49" W	Stormwater from Moreno Valley RWRF to storm drain tributary to San Jacinto River	various
S-04	33° 52' 18" N	117° 13'02" W		various
S-05	33° 52' 15" N	117° 13'02" W		various
S-06	33° 52' 06" N	117° 13'02" W		various
S-07	33° 41' 45" N	117° 12'34" W	Stormwater from Sun City RWRF to storm drain tributary to Salt Creek	various
S-08	33° 41' 42" N	117° 12'37" W		various
S-09	33° 41' 40" N	117° 12'39" W		various
S-10	33° 41' 42" N	117° 12'39" W		various
S-11	33° 41' 45" N	117° 12'34" W	Stormwater from Sun City RWRF to storm drain tributary to Salt Creek	various
S-12	33° 45' 26" N	117° 11'43" W	Stormwater from San Jacinto Valley RWRF to storm drain tributary to San Jacinto River	various

3. Stormwater Discharge points

During high rainfall periods, excess runoff (that which exceeds the storm water pump station capacity) at each EMWD RWRF) overflows into nearby stormdrains, as listed in Table 3.

C. Summary of Previous Requirements and Self-Monitoring Report (SMR) Data

1. Effluent limitations/Discharge Specifications contained in the previous Order No. R8-2004-0065 for discharges at DP 001 and representative monitoring data from the term of the previous Order are as follows:

Table 4. Historic Effluent Limitations and Monitoring Data

Parameter (units)	Effluent Limitation			Monitoring Data (November 2004 to November 2008)			
	Average Monthly	Average Weekly	Maximum Daily	Highest Average Monthly Discharge	Highest Average Weekly Discharge	Highest Daily Discharge	Highest 12-Month Average
Flow (mgd)			52.5	37		47	
pH Daily Average (SU)			Range 6.5-8.5			Range 5.4-8.7	
BOD5 (mg/L)	20	30		8.9	20		
Suspended Solids (mg/L)	20	30		8	14		
Coliform Organisms (MPN/100 mL)	≤23 per month	2.2			4	>1600	
Ammonia-Nitrogen (mg/L)	4.5			3.9			
Total Residual Chlorine (mg/L)			0.1 Instant. Maximum			1.0	
TDS (mg/L)	12-Month Ave.= 650						750
Total Hardness (mg/L)					5th percentile 191	280	
TIN (mg/L)	12-Month Ave.= 10						10.3
Arsenic (µg/L)				2.4		2.4	
Total Recoverable Cadmium (µg/L)				1.3		1.3	
Total Recoverable Chromium (VI) (µg/L)	8.1		16.3	11		11	
Total Recoverable Copper (µg/L)	12.8		25.6	16		16	

Table 4. Historic Effluent Limitations and Monitoring Data

Parameter (units)	Effluent Limitation			Monitoring Data (November 2004 to November 2008)			
	Average Monthly	Average Weekly	Maximum Daily	Highest Average Monthly Discharge	Highest Average Weekly Discharge	Highest Daily Discharge	Highest 12-Month Average
Free Cyanide (µg/L)	4.3		8.5	11		11	
Total Recoverable Lead (µg/L)			50	1.4		1.4	
Total Recoverable Mercury (µg/L)	0.04		0.08	<0.2		<0.2	
Total Recoverable Nickel (µg/L)				3.0		3.0	
Total Recoverable Selenium (µg/L)	4		8	13		13	
Total Recoverable Silver (µg/L)			50	1.2		1.2	
Total Recoverable Zinc (µg/L)				50		50	
Total Recoverable Aluminum (µg/L)	71		142.6	610		610	
Bis(2-Ethylhexyl) Phthalate (µg/L)	5.9		15	36		36	
Bromodichloro Methane (µg/L)	46		92.5	61		61	
Chlorodibromo Methane (µg/L)				30		30	

D. Compliance Summary

Based on a review of effluent monitoring data submitted by the Discharger for the period from 2004 through 2008, the following Table shows the compliance summary for the Facility:

Table 5. Compliance Status

Month	Type of Incident	Explanation/Reason	Corrective Action Taken
Oct. 05 – Dec. 08	Total Dissolved Solids	Source Water for has increased over the past 4 year due to drought condition; the effluent reflects these increases.	The concentration for daily maximum as well as the 12-month average exceeded the limit; however, the mass loading is well below the limit. It is the goal of EMWD to limit the surface water discharge to a minimum and to utilize 100% of the recycled water within the District. In addition, EMWD will implement an offset program acceptable to Regional Board Staff.
Oct 05 - Jan 06, Mar. 06, Nov 06 - Apr 07, Dec 07 - Apr 08, Jun & Aug 08	Aluminum	Most abundant element found within the soil. Possible cause due to infiltration of silt and clay to collection system.	Request a review of the limit to amend or eliminate due to questions regarding the scientific basis for the effluent limitation. EMWD Source Control conducted a study "Perris Aluminum Study 2007" to determine possible sources. No defined sources were identified.
Feb, Jul, Aug Nov & Dec 06, Feb 07, & Jun 08	Free Cyanide	Formation apparently due to chlorination and possibly sample preservation.	Participation in SARDA Free Cyanide Study to develop an acceptable method for determining Free Cyanide.
Jan 04	Selenium, Total Recoverable	Like Aluminum, Selenium is found naturally and is present in many sedimentary formations. Possible cause due to infiltration of silt and clay to collection system.	Continual monitoring and source identification.
Jun 08	Dichlorobromomethane	Formation caused by precursor organics and chlorination.	Continual monitoring.
Sep, Oct, & Dec 06	Bis(2-ethylhexyl) phthalate	Found in plastic; possible contamination in sample tubing.	Periodic audit and training of Recycled Water Operation Staff to verify correct usage of sampling tubing. Continual monitoring.
Apr. 08	Copper, Total Recoverable	Used in algae control for ponds.	Investigating other methods and chemicals for pond algae control; installation of Solar Bee. Continual monitoring.

E. Planned Changes

1. Regional Recycled Water System
   By 2009 (In-Process)
   - Dechlorination and pH adjustment facility installation at Reach 4 Pump Station, Palomar Pump Station, and Dissipation Station.

2. San Jacinto Valley RWRF

   By Sept. 2011:
   Title 22 Tertiary Plant Upgrade Project - Additional tertiary treatment facilities for a capacity of 14.9 MGD annual average (15.4 MGD maximum month), including:
   - New pump at the existing filter influent pump station
   - Two new flocculation basins with rapid mixing chamber
   - New Tertiary Filters
   - A new tertiary chemical building with alum and polymer systems (replaces the temporary chemical facility installed on the Emergency Filter project).
   - One chlorine contact basin
   - A new utility water pump station
   - A new tertiary effluent pump station
   - A new effluent pump station electrical building
   - Tertiary effluent reservoir (ponds)

   By Jan 2014:
   Plant 2 Facilities Project – Primary and secondary treatment and solids handling units expansion to 14.0 MGD annual average (15.4 maximum month), including:
   - Headworks to 18 MGD annual average (existing headworks will be demolished)
   - Primary and secondary clarifiers
   - Aeration basins (Nitrification/denitrification- NDN)
   - Aeration blowers
   - WAS thickening
   - Sludge digestion
   - WAS pumps
   - Sludge truck loading hopper
   - Odor control
   - Chemical Facilities
   - Return water pump stations
   - Electrical Buildings
   - O & M building
   - Main Power Bldg.

3. Moreno Valley RWRF:

   By 2009 (In-process):

- Deepen 4 of the existing 18 ponds to increase storage capacity by 30 MG. Current capacity is 225 MG.

By 2009 (In-process):
- Sludge thickening, Rotary Drum Thickener (RDT) expansion to 20 MGD
- Replacement of influent screens with 3 new bar screens
- One new screenings washer/compactor

By2009:
- Fuel Cells

By Sept 2011:
- Secondary clarifier expansion
- Tertiary filter expansion to 22.0 MGD annual average (24.2 maximum month)
- Two new chlorine contact basins

By Oct 2012:
- One new Plant 2 vortex grit basin
- RAS/WAS pumping capacity expansion
- Filter Influent Pumping expansion
- Additional alum and polymer pump facility
- Sludge digestion expansion
- Digested Sludge Storage

3. Perris Valley RWRF:

By June 2011:
Plant 3 Expansion to 18 MGD annual average (19.8 maximum month) for Primary, Secondary & Solid Handling Facilities, including:
- Headworks
- Influent Lift station
- Grit chambers
- Primary Clarifier
- Primary Effluent Splitter Box
- APT Chemical/Ferric Chloride Facility
- Plant 2 RAS/WAS Pump Station
- Plant 3 Aeration Basins
- Plant 2A and 3 Blower Building
- Secondary Polymer Treatment Facility
- Secondary Clarifiers
- Plant 2A Aeration Basins
- Tertiary/Dewatering Return Water Pump Station
- Plant 3 RAW/WAS Pump Station
- Scum Decant Pump Station
- Primary scum pit

- Secondary Scum Pit No 1 & 2
- Sludge Dewatering Building
- WAS Thickening Building
- Digesters
- Sludge Storage Tank
- Low Pressure Digester Gas Holder
- Septage Receiving Station
- Boiler Facility, Standby Generator
- WAS Thicken Return Water Pump Station
- Digester Gas Flaring Facility
- Digester Gas Compression Facility
- Biofilters
- Cogeneration facility
- Sludge Transfer Pump Station
- Electrical Buildings
- Plant 2 Upgrades included above to secondary capacity of 25.0 MGD annual average (27.5 maximum month)

By Dec 2013:
- Upgrade Plant 1

4. Sun City RWRF: (Out of Service)

5. Temecula Valley RWRF:

   By Dec 2010:
   - Secondary and Tertiary Ponds

   By July 2012
   - 18 MGD Solids handling upgrade

6. Santa Rosa Water Reclamation Facility (RCWD)
   By July 2012
   - Expansion to 7.0 mgd
   - Conversion to Extended Aeration
   - Addition of Influent Screens, Aeration Tanks, Secondary Clarifiers, Cloth Filters, Additional Recycled Water Storage

III. APPLICABLE PLANS, POLICIES, AND REGULATIONS

A. Legal Authorities

This Order is issued pursuant to section 402 of the federal Clean Water Act (CWA) and implementing regulations adopted by the U.S. Environmental Protection Agency (USEPA) and Chapter 5.5, Division 7 of the California Water Code (commencing with Section 13370). It shall serve as a NPDES permit for point source discharges from this Facility to surface waters.

B. California Environmental Quality Act (CEQA)

Under Water Code section 13389, this action to adopt an NPDES permit is exempt from the provisions of CEQA, Public Resources Code section 21000 et seq. (*County of Los Angeles v. California State Water Resources Control Board* (2006) 143 Cal.App.4th 985, mod. (Nov. 6, 2006, B184034) 50 Cal.Rptr.3d 619, 632-636.)

C. State and Federal Regulations, Policies, and Plans

1. **Water Quality Control Plans.** The Regional Water Board adopted an updated Water Quality Control Plan for the Santa Ana Basin (hereinafter Basin Plan) that became effective on January 24, 1995. The Basin Plan designates beneficial uses, establishes water quality objectives, and contains implementation programs and policies to achieve those objectives for all waters addressed through the plan. In addition, State Water Resources Control Board (State Water Board) Resolution No. 88-63 (Sources of Drinking Water Policy) requires that, with certain exceptions, the Regional Water Board assign the municipal and domestic water supply use to water bodies. Based on the exception criteria specified in Resolution No. 88-63, the Regional Water Board excepted Temescal Creek and certain reaches of the Santa Ana River, including Reach 3 and downstream reaches from the municipal and domestic supply beneficial use.

   On January 22, 2004, the Regional Water Board adopted Resolution No. R8-2004-0001, amending the Basin Plan to incorporate revised boundaries for groundwater subbasins, now termed “management zones”, new nitrate-nitrogen and TDS objectives for the new management zones, and new nitrogen and TDS management strategies applicable to both surface and ground waters. The State Water Board and Office of Administrative Law (OAL) approved the N/TDS Amendment on September 30, 2004 and December 23, 2004, respectively. EPA approved the surface water standards components of the N/TDS Amendment on June 20, 2007.

   The designated beneficial uses of receiving waters affected by the discharge from the Facility are as follows:

Table 6. Basin Plan Beneficial Uses

Discharge Point	Receiving Water	Beneficial Uses
001	Reach 5 of Temescal Creek	Present or Potential: Agricultural supply, groundwater recharge, water contact recreation, non-contact water recreation, warm freshwater habitat, wildlife habitat, and rare, threatened or endangered species. Excepted from Municipal and Domestic Supply.
	Reach 3 of Santa Ana River and downstream reaches	Present or Potential: Agricultural supply, groundwater recharge, water contact recreation, non-contact water recreation, warm freshwater habitat, wildlife habitat, and rare, threatened or endangered species. Excepted from Municipal and Domestic Supply.
	Prado Basin Management Zone	Present or Potential: Warm freshwater habitat; wildlife habitat, Water contact[9] recreation and non-contact water recreation. Excepted from Municipal and Domestic Supply
	Elsinore and downstream groundwater management zones	Present or Potential: Municipal water supply, Agricultural supply, industrial process supply, Industrial service supply
S-01 to S-12	Ephemeral surface water drainages, such as Salt Creek, and San Jacinto River	Present or Potential, intermittent beneficial uses: Agricultural supply, groundwater recharge, water contact recreation, non-contact water recreation, warm freshwater habitat, wildlife habitat

Requirements of this Order implement the Basin Plan.

2. **National Toxics Rule (NTR) and California Toxics Rule (CTR).** USEPA adopted the NTR on December 22, 1992, and later amended it on May 4, 1995 and November 9, 1999. About forty criteria in the NTR applied in California. On May 18, 2000, USEPA adopted the CTR. The CTR promulgated new toxics criteria for California and, in addition, incorporated the previously adopted NTR criteria that were applicable in the state. The CTR was amended on February 13, 2001. These rules contain numeric water quality criteria for priority pollutants.

[9] *Access prohibited in some areas by Riverside County Flood Control.*

3. **State Implementation Policy.** On March 2, 2000, the State Water Board adopted the *Policy for Implementation of Toxics Standards for Inland Surface Waters, Enclosed Bays, and Estuaries of California* (State Implementation Policy or SIP). The SIP became effective on April 28, 2000 with respect to the priority pollutant criteria promulgated for California by the USEPA through the NTR and to the priority pollutant objectives established by the regional water boards in the basin plans. The SIP became effective on May 18, 2000 with respect to the priority pollutant criteria promulgated by the USEPA through the CTR. The State Water Board adopted amendments to the SIP on February 24, 2005 that became effective on July 13, 2005. The SIP establishes implementation provisions for priority pollutant criteria and objectives and provisions for chronic toxicity control. Requirements of this Order implement the SIP.

4. **Alaska Rule.** On March 30, 2000, USEPA revised its regulation that specifies when new and revised state and tribal water quality standards (WQS) become effective for CWA purposes (40 C.F.R. § 131.21, 65 Fed. Reg. 24641 (April 27, 2000)). Under the revised regulation (also known as the Alaska rule), new and revised standards submitted to USEPA after May 30, 2000, must be approved by USEPA before being used for CWA purposes. The final rule also provides that standards already in effect and submitted to USEPA by May 30, 2000, may be used for CWA purposes, whether or not approved by USEPA.

5. **Antidegradation Policy.** CWA Section 131.12 requires that the state water quality standards include an antidegradation policy consistent with the federal policy. The State Water Board established California's antidegradation policy in State Water Board Resolution No. 68-16. Resolution No. 68-16 incorporates the federal antidegradation policy where the federal policy applies under federal law. Resolution No. 68-16 requires that existing water quality be maintained unless degradation is justified based on specific findings. The Regional Water Board's Basin Plan implements, and incorporates by reference, both the State and federal antidegradation policies.

6. **Anti-Backsliding Requirements.** Sections 402(o)(2) and 303(d)(4) of the CWA and federal regulations at title 40, Code of Federal Regulations[10] section 122.44(l) prohibit backsliding in NPDES permits. These anti-backsliding provisions require that effluent limitations in a reissued permit must be as stringent as those in the previous permit, with some exceptions in which limitations may be relaxed. Pursuant to CWA 303(d)(4), the aluminum limitations specified in the previous permit as amended are deleted from this Order. (see section IV.C.3.b, below for further discussion). Furthermore, pursuant to Section 402(o)(2)(B)(ii) of the CWA, the limit for total recoverable mercury is revised in this Order (see further discussion in section IV.E.1.c., below).

---

[10] *All further statutory references are to title 40 of the Code of Federal Regulations unless otherwise indicated.*

7. **Monitoring and Reporting Requirements.** Section 122.48 of 40 CFR requires that all NPDES permits specify requirements for recording and reporting monitoring results. Sections 13267 and 13383 of the CWC authorize the Regional Water Board to require technical and monitoring reports. The Monitoring and Reporting Program (MRP) establishes monitoring and reporting requirements to implement federal and State requirements. This MRP is provided in Attachment E.

8. **Total Dissolved Solids Offset:** The amended Basin Plan includes wasteload allocations for discharges of total dissolved solids (TDS) to Temescal Creek and the Santa Ana River system. The Basin Plan recognizes that strict compliance with TDS limits may be difficult to achieve and it describes the regulatory approach the Regional Board uses to address such situations. The Board incorporates offset provisions in waste discharge requirements whereby Dischargers can implement an approved program to offset TDS discharges in excess of specified TDS limits, provided that the Discharger makes all reasonable efforts to improve the TDS quality of the water supply (and thereby, the wastewater).

D. Impaired Water Bodies on CWA 303d) List – Not Applicable

E. Other Plans, Polices and Regulations-Not Applicable

IV. RATIONALE FOR EFFLUENT LIMITATIONS AND DISCHARGE SPECIFICATIONS

The CWA requires point source Dischargers to control the amount of conventional, non-conventional, and toxic pollutants that are discharged into the waters of the United States. The control of pollutants discharged is established through effluent limitations and other requirements in NPDES permits. There are two principal bases for effluent limitations in the Code of Federal Regulations: section 122.44(a) requires that permits include applicable technology-based limitations and standards; and section 122.44(d) requires that permits include water quality-based effluent limitations to attain and maintain applicable numeric and narrative water quality criteria to protect the beneficial uses of the receiving water

A. Discharge Prohibitions

The discharge prohibitions are based on the Federal Clean Water Act, Basin Plan, State Water Board's plans and policies, U.S. Environmental Protection Agency guidance and regulations, and previous permit Order No. R8-2004-0065 provisions and are consistent with the requirements set for other discharges regulated by NPDES permits adopted by the Regional Water Board.

B. Technology-Based Effluent Limitations

1. Scope and Authority

Section 301(b) of the CWA and implementing USEPA permit regulations at section 122.44, title 40 of the Code of Federal Regulations, require that permits include conditions meeting applicable technology-based requirements at a minimum, and any more stringent effluent limitations necessary to meet applicable water quality standards. The discharge authorized by this Order must meet minimum federal technology-based requirements based on Secondary Treatment Standards at Part 133 and/or Best Professional Judgment (BPJ) in accordance with Part 125, section 125.3.

Regulations promulgated in 40 CFR §125.3(a)(1) require technology-based effluent limitations for municipal dischargers to be placed in waste discharge requirements based on Secondary Treatment Standards or Equivalent to Secondary Treatment Standards.

The Federal Water Pollution Control Act Amendments of 1972 (PL 92-500) established the minimum performance requirements for POTWs [defined in Section 304(d)(1)]. Section 301(b)(1)(B) of that Act requires that such treatment works must, as a minimum, meet effluent limitations based on secondary treatment as defined by the USEPA Administrator.

Based on this statutory requirement, USEPA developed secondary treatment regulations, which are specified in 40 CFR Part 133. These technology-based regulations apply to all municipal wastewater treatment plants and identify the minimum level of effluent quality attainable by secondary treatment in terms of biochemical oxygen demand (BOD_5), total suspended solids (TSS), and pH.

2. Applicable Technology-Based Effluent Limitations

This Facility meets the technology-based regulations for the minimum level of effluent quality attainable by secondary treatment in terms of BOD_5, total suspended solids and removal rate as summarized in the Table below. Secondary treated wastewater that meets the limitations specified in the Table, below, may be discharged to Temescal Creek during wet seasons under 20:1 dilution conditions.

Table 7. Summary of Technology-Based Effluent Limits for Secondary Treatment

Constituent	Average Weekly (mg/L)	Average Monthly (mg/L)	Average Monthly Removal Rate %
Biochemical Oxygen Demand, 5-day 20^0C	45	30	85
Total Suspended Solids	45	30	85

C. Water Quality-Based Effluent Limitations (WQBELs) for DP 001

1. Scope and Authority

Section 301(b) of the CWA and section 122.44(d) require that permits include limitations more stringent than applicable federal technology-based requirements where necessary to achieve applicable water quality standards.

Section 122.44(d)(1)(i) mandates that permits include effluent limitations for all pollutants that are or may be discharged at levels that have the reasonable potential to cause or contribute to an exceedance of a water quality standard, including numeric and narrative objectives within a standard. Where reasonable potential has been established for a pollutant, but there is no numeric criterion or objective for the pollutant, water quality-based effluent limitations (WQBELs) must be established using: (1) USEPA criteria guidance under CWA section 304(a), supplemented where necessary by other relevant information; (2) an indicator parameter for the pollutant of concern; or (3) a calculated numeric water quality criterion, such as a proposed state criterion or policy interpreting the state's narrative criterion, supplemented with other relevant information, as provided in section 122.44(d)(1)(vi).

The process for determining reasonable potential and calculating WQBELs when necessary is intended to protect the designated uses of the receiving water as specified in the Basin Plan, and achieve applicable water quality objectives and criteria that are contained in other state plans and policies, or any applicable water quality criteria contained in the CTR and NTR.

2. Applicable Beneficial Uses and Water Quality Criteria and Objectives

a. The Basin Plan specifies narrative and numeric water quality objectives applicable to surface water as follows.

Table 8. Applicable Basin Plan Surface Water Quality Objectives

Constituents	Basis for Limitations
Chlorine, Residual	Wastewater disinfection with chlorine usually produces chlorine residual. Chlorine and its reaction products are toxic to aquatic life. To protect aquatic life, the Basin Plan specifies that for wastewater discharged into inland surface waters, the chlorine residual should not exceed 0.1 mg/L
pH	The pH of inland surface water shall not be raised above 8.5 or depressed below 6.5 as a result of controllable water quality factors.
Ammonia Nitrogen	Dissociates under certain conditions to the toxic un-ionized form. Thus nitrogen discharges to surface water pose a threat to aquatic life and instream beneficial uses, as well as to the beneficial uses of affected groundwater. The Basin Plan specifies total ammonia and un-ionized ammonia objectives. To meet these objectives, the Basin Plan specified an effluent limit of 4.5 mg/L for discharges to Temescal Creek and the Santa Ana River, Reach 3.
Oil & Grease	Oil and related materials have a high surface tension and are not soluble in water, resulting in odors and visual impacts.
Total Dissolved Solids	High levels of TDS can adversely impact aquatic life. The TDS limit for surface water discharges is based on the amended Basin Plan wasteload allocation of 650 mg/L at 43 mgd flow. The wasteload allocation was established to meet TDS objectives for the affected waters.
Total Inorganic Nitrogen	Nitrogen discharges to the Santa Ana River pose a threat to aquatic life and instream beneficial uses, as well as to the beneficial uses of affected groundwater. The TIN limit for surface water discharges is based on the amended Basin Plan wasteload allocation of 10.0 mg/L at 43 mgd flow. The wasteload allocation was established to meet nitrogen objectives for the affected waters.

(1) TDS and TIN: TDS and TIN limitations are specified in the Order for discharges of tertiary treated effluent from DP 001 to Reach 5 of Temescal Creek, a tributary to Reach 3 of the Santa Ana River within the Prado Basin Management Zone. These TDS/TIN limits are based on the waste load allocations specified in Table 5-5 of the amended basin Plan. These allocations were developed to achieve the TDS and nitrogen objectives of affected receiving waters.

TDS: This Order includes a TDS limit based on the flow weighted running average quality of the water supplied to the service area plus a reasonable use increment of 250 mg/L. (The flow-weighted average is calculated based on data for the months (typically wet months) when discharges to Temescal Creek occur.) This reasonable use increment addition is discussed and authorized in the Basin Plan.

For surface water discharges, the more restrictive of the TDS limit based on the wasteload allocation or the TDS limit based on water supply quality plus a reasonable use increment applies to discharges from the Facility.

In accordance with 40 CFR Section 122.45(d), there may be instances in which the basis for a limit for a particular continuous discharge may be impracticable to be stated as a maximum daily, average weekly, or average monthly effluent limitation. The Regional Water Board has determined that it is not practicable to express TDS and TIN effluent limitations as average weekly and average monthly effluent limitations because the TDS and TIN objectives in the Basin Plan were established primarily to protect the underlying groundwater. Consequently, a 12-month average period is typically more appropriate. This Order specifies 12-month average limits for TDS and TIN. However, this Order also recognizes that discharges occur only during wet months. Accordingly, calculations to determine compliance with the 12-month average limits will be based solely on data collected during those months when discharges actually occur.

(2) TDS offset program: The Basin Plan recognizes that strict compliance with TDS limits may be difficult to achieve and it describes the regulatory approach the Regional Board uses to address such situations. The Board incorporates offset provisions in waste discharge requirements whereby dischargers can implement an approved program to offset TDS discharges in excess of specified TDS limits, provided that the Discharger makes all reasonable efforts to improve the TDS quality of the water supply (and thereby, the wastewater). This Order requires the Discharger to submit a proposed offset program and schedule of implementation for approval by the Executive Officer (see Provisions VI.C.2.c.).

b. NTR, CTR and SIP. The National Toxics Rule, California Toxics Rule (CTR) and State Implementation Policy specify numeric objectives for toxic substances and the procedures whereby these objectives are to be implemented. The procedures include those used to conduct reasonable potential analysis to determine the need for effluent limitations for priority and non-priority pollutants.

c. Requirement to meet 2.2 total coliform bacteria limit in the effluent

Article 3, Section 60305 of Title 22, Chapter 3, "Use of Recycled water for impoundments" of the California Code of Regulations specifies that recycled water used as a source of supply in a nonrestricted recreational impoundment shall be at all times an adequately disinfected, oxidized, coagulated, clarified, filtered wastewater (tertiary treated). The degree of treatment specified represents an approximately 5-log reduction in the virus content of the water. The California State Department of Public Health (CDPH) has determined that this degree of virus removal is necessary to protect the health of people using these impoundments for water contact recreation. The CDPH has developed wastewater disinfection guidelines ("Wastewater Disinfection for Health Protection", Department of Health Services, Sanitary Engineering Branch, February 1987) for discharges of wastewater to surface waters where water contact recreation (REC-1) is a beneficial use. The disinfection guidelines

recommend the same treatment requirements for wastewater discharges to REC-1 waters as those stipulated in Title 22 for supply of recycled water to nonrestricted recreational impoundments, since the public health risks under both scenarios are analogous. The disinfection guidelines are based on sound science and are widely used as guidance to assure public health and beneficial use protection.

Reach 3 of Santa Ana River and Reach 5 of Temescal Creek are not nonrestricted recreational impoundment", nor is "recycled water[11]" being used as a supply source for the River or Creek pursuant to the definitions in Title 22. However, to protect the water contact recreation beneficial use and to prevent nuisance and health risk, it is necessary and appropriate to require the same degree of treatment for wastewater discharges to the River and Creek as would be required for the use of recycled water in a nonrestricted recreational impoundment. Thus, this Order specifies requirements based on tertiary or equivalent treatment.

3. Determining the Need for WQBELs

a. Priority Pollutants

In accordance with Section 1.3 of the SIP, the Regional Water Board conducted a reasonable potential analysis (RPA) for each priority pollutant with an applicable criterion or objective to determine if a WQBEL is required in the Order. The Regional Water Board analyzed effluent data to determine if a pollutant in a discharge has the reasonable potential to cause or contribute to an excursion above a state water quality standard. For all parameters that have the reasonable potential to cause or contribute to an excursion above a water quality standard, numeric WQBELs are required. The RPA considers criteria from the CTR, and when applicable, water quality objectives specified in the Basin Plan.

Sufficient data are needed to conduct a complete RPA. If data are not sufficient, the Discharger will be required to gather the appropriate data for the Regional Water Board to conduct the RPA. Upon review of the data, and if the Regional Water Board determines that WQBELs are needed to protect the beneficial uses, the permit will be reopened for appropriate modification.

The RPA was performed for the pollutants for which effluent data were available including free cyanide, selenium, Bis(2-ethylhexyl) phthalate, Dichlorobromomethane, total recoverable copper and total recoverable chromium(VI). By reviewing the data provided by the Discharger, free cyanide, selenium, and Dichlorobromomethane were determined to have reasonable potential to cause an excursion above applicable pollutant criteria or objectives. Consequently, effluent limitations for these constituents are included in this

[11] *As defined in the Reclamation Criteria, recycled water means water which, as a result of treatment of domestic wastewater, is suitable for a direct beneficial use or a controlled use that would not otherwise occur.*

Order. Total recoverable copper and total recoverable chromium (VI) were determined to have no reasonable potential to cause an excursion above applicable pollutant criteria or objectives. Consequently, effluent limitations for these constituents are not included in this Order.

Bis(2-ethylhexyl) phthalate was detected once in 2006. However, the Discharger determined that plastic tubings/containers used in sampling and testing caused the detection. The Discharger is no longer using plastic tubings/containers for sampling. Since the change was implemented, Bis(2-ethylhexyl) phthalate has not been detected. Consequently, effluent limitations for Bis(2-ethylhexyl) phthalate are not included in this Order,

The total recoverable mercury limits in the previous permit are retained in this Order because the reporting limits used in conducting the laboratory test was 0.2 µg/L, which is higher and not comparable to the mercury limits. This Order requires the Discharger to use a reporting limit of 0.05 µg/L for purposes of total recoverable mercury testing. This reporting limit is much closer to the effluent limit of 0.051 µg/L.

Table 9. RPA Evaluation for DP 001

Parameter	unit	Effluent MEC	CTR-Fresh water			Basin Plan	RPA
		Fresh water	CMC/CCC	WQO	Human Health	WQO	
Cyanide, Free	µg/L	11	22/5.2				yes
Selenium	µg/L	13	/5.0				yes
Dichlorobromomethane	µg/L	61			46		yes
Total recoverable chromium (VI)	µg/L	11	16/11				No
Total recoverable copper*	µg/L	16	67/42				No

*: 5th percentile of effluent hardness of 191 mg/L is used to calculate hardness dependent metals criteria.

b. Non-Priority Pollutant Aluminum

On November 18, 2005, the Regional Board adopted Order No. R8-2005-0078, amending Order No. R8-2004-0065, NPDES No. CA8000188, to incorporate effluent limits and monitoring requirements for aluminum. A maximum daily limit of 142.6 µg/L and average monthly limit of 71 µg/L were added for aluminum. The effluent limitations for aluminum were based on Best Professional Judgment of the requirements necessary to implement the narrative toxicity objectives in the Basin Plan, essentially that there be “no toxics in toxic amounts”. In developing these limitations, and in conducting the reasonable potential analysis to determine whether or not aluminum limits were necessary to prevent violations of water quality standards, Board staff relied on the US EPA’s National Recommended Water Quality Criteria for Non- Priority Pollutants (1998). These

criteria, initially published in 1986 and updated in 2006, serve as guidance to states and do not impose legally binding requirements. The 1986/1998 and 2006 criteria document for aluminum includes a footnote referenced "L", which recognizes that aluminum toxicity appears to be pH and hardness dependent, though the specific relationships have not been well quantified. Footnote "L" also notes that the recommended chronic value of 87 ug/L was based on a toxicity test with striped bass in water with pH= 6.5-6.6 and hardness <10 mg/L.

Recent investigation[12] conducted by the Arid West Water Quality Research Project[13] and funded by EPA, reviewed and recommended updates to the Ambient Water Quality Criteria for aluminum. The study updated the aluminum acute and chronic toxicity database on which the national criteria were based and, using that updated database, developed recommendations for new, hardness-based equations for calculating acute and chronic aluminum criteria. No hardness adjustment had been included in the 1986 criteria. The table below shows the recommended updated and revised acute and chronic aluminum criteria based on varying hardness. These criteria are, with one exception (at 25 mg/L hardness), significantly less stringent than the 1986 criteria (750 µg/L acute; 87 µg/L chronic)

Table 10. Recalculated Acute and Chronic Aluminum Criteria Values (µg Total Aluminum/L) for the Arid West (includes the Santa Ana River)

Mean Hardness (mg/Las CaCO3)	25	50	75	100	150	200	250	300	350	400
Acute Criterion ug/L	719	1280	1794	2280	3195	4060	4889	5691	6470	7231
Chronic Criterion ug/L	287	512	717	911	1623	1954	2275	2586	2890	

NOTE: Current EPA Al recommended criteria: 750 µg/L acute; 87 µg/L chronic

The mean hardness in effluent flows discharged into Temescal Creek is 213 mg/L and the maximum daily effluent Aluminum concentration was 610 µg/L. Based on the recalculated recommended criteria shown in the above Table, the Aluminum acute and chronic criteria at a hardness of 200 or more are greater than 4060 µg/L and 1623 µg/L, respectively. This indicates that aluminum in the recycled water discharges do not pose the reasonable potential to cause or contribute to violations of water quality standards. Furthermore, the California Department of Public Health (CDPH) primary maximum contaminant levels (MCLs) for Aluminum is 1000 µg/L.

Board staff conducted reasonable potential analysis for aluminum based on the recommended revised criteria and found that aluminum in EMWD's discharge

12 *Evaluation of the EPA Recalculation Procedure in the Arid West Technical Report, May 2006.*

13 *The Arid West Water Quality Research Project was established in 1995 as a result of a federal appropriation (Public Law 103-327) and the establishment of an Assistance Agreement between the USEPA and Pima County Wastewater Management of Tucson, Arizona.*

does not have the reasonable potential to cause or contribute to violations of water quality standards. Accordingly, effluent limits for aluminum are not required.

The antibacksliding provisions of the Clean Water Act (see III.C.6, above) prohibit modifying a permit to include effluent limits less stringent than those in the previous permit (or, as proposed in this case, to delete effluent limits), unless certain exceptions are met. In this case, pursuant to CWA Section 303(d)(4)(a), the aluminum water-quality based effluent limitation may be relaxed (deleted) to the extent that this action is consistent with the state's antidegradation policy (State Water Resources Control Board Resolution No. 68-16, "Statement of Policy with Respect to Maintaining High Quality of Waters in California"). Temescal Creek is in attainment since it is not listed in the 2006 CWA 303(d) list of Water Quality Limited Segments approved by the US EPA. To determine consistency with the antidegradation policy, the first question is whether deletion of the aluminum limitation would result in a lowering of water quality. Provided that no lowering of water quality would result from the deletion of the effluent limit, then the action is consistent with antidegradation requirements. EMWD's treatment and disposal of municipal wastewater does not result in changes (either increases or reductions) in aluminum concentration or mass in the receiving waters. Therefore, removal of the aluminum effluent limits will have no effect on the quality of the discharges, or on the receiving waters. The removal of the aluminum effluent limits is thus consistent with the antidegradation policy and with the backsliding exceptions specified in the Clean Water Act.

In light of the finding that aluminum in EMWD's discharge does not have the reasonable potential to cause or contribute to violations of water quality standards, it is appropriate also to reduce the requisite aluminum monitoring frequency from monthly to quarterly.

For the affected receiving groundwater management zones which are designated for municipal water supply (MUN), the maximum aluminum effluent concentration of the discharge was 610 μg/L, which is less than the,California Department of Public Health (CDPH) maximum contaminant levels (MCLs) of 1000 μg/L for Aluminum. Consequently, no Aluminum effluent limits are necessary to protect the MUN use or public health.

4. WQBEL Calculations

No mixing zone allowance is included in the calculation of effluent of limits in this Order, and consequently, compliance with the effluent limits is required to be determined at the end of the discharge pipe for freshwater discharge.

a. For priority pollutants, water quality based effluent limits are based on monitoring results and the calculation process outlined in Section 1.4 of the California Toxic Rule and the Policy for Implementation of Toxics Standards for Inland Surface Waters, Enclosed Bays and Estuaries of California are summarized in the

following Table. The criteria calculation is based on CTR criteria for freshwater.

Description	Dichlorobromomethane		
Effluent Concentrations			
Sample Dates - Begin	Nov-04		
Sample Dates - End	Jun-08		
At least 80% of the data ND?	No		
Sample Count	36		
MEC (µg/l)	61		
Mean (µg/l)	23.0		
Std. Deviation (µg/l)	12.07		
Coeff of Variation (CV) (µg/l)	0.53		
Background Concentrations			
Sample Dates - Begin	None		
Sample Dates - End	None		
Sample Count	0		
Max Background (µg/l)	0.0		
Avg Background (µg/l)	0.0		
Criteria	Basin Plan	Human Health(water+org)	**Human Health(org only)**
Hardness (mg/l as $CaCO_3$)	N/A	N/A	**N/A**
NTR/CTR Criteria[1] (µg/l)		0.56	**46**
Basin Plan Objective (µg/l)(2)			
Translator [3]			
Criteria (µg/l, total recoverable)[4]		0.56	**46**
Effluent Limit Calculations			
Dilution Credit	0	0.0	**0**
ECA [5] (µg/l)	0.0	0.6	**46**
σ^2	0.24	0.24	**0.24**
σ_4^2	0.07	0.07	**0.07**
ECA Multiplier [6]	N/A	N/A	**N/A**
Long-Term Average	N/A	N/A	**N/A**
AMEL Multiplier [7][8]	1.48	1.48	**1.48**
Average Monthly Effluent Limit µg/L		**0.6**	**46**
MDEL Multiplier [9]	2.79	2.79	**2.79**
Max. Daily Effluent Limit µg/L		**1.1**	**87**

Table 11. Cyanide Calculation of Effluent limits at DP 001

Description	Free Cyanide				
Effluent Concentrations					
Sample Dates - Begin	Jan.- 05				
Sample Dates - End	Apr.- 08				
At least 80% of the data ND?	No				
Sample Count	12				
MEC (µg/l)	11.0				
Mean (µg/l)	6.46				
Std. Deviation (µg/l)	2.11				
Coeff of Variation (CV) (µg/l)	0.33				
Background Concentrations					
Sample Dates - Begin	None				
Sample Dates - End	None				
Sample Count	0				
Max Background (µg/l)	None				
Avg Background (µg/l)	None				
Criteria	Basin Plan	acute	**chronic**	acute-sw	chronic-sw
Hardness (mg/l as $CaCO_3$)	N/A	N/A	**N/A**	N/A	N/A
NTR/CTR Criteria(1) (µg/l)		22	**5.2**	1.0	1.0
Basin Plan Objective (µg/l)(2)					
Translator (3)		1.000	**1.000**	1.000	1.000
Criteria (µg/l, total recoverable)(4)		22	**5.2**	1.0	1.0
Effluent Limit Calculations					
Dilution Credit	0	0	**0**	0	0
ECA (5) (µg/l)		22	**5.2**	1.0	1.0
σ^2	0.10	0.10	**0.10**	0.10	0.10
σ_4^2	0.03	0.03	**0.03**	0.03	0.03
ECA Multiplier (6)	N/A	0.502	**0.695**	0.502	0.695
Long-Term Average	N/A	11.1	**3.6**	0.5	0.7
AMEL Multiplier (7)(8)	1.29	*	**1.29**	1.3	*
Average Monthly Effluent Limit, µg/L		*	**4.7**	**0.6**	*
MDEL Multiplier (8)	1.99	*	**1.99**	2.0	*
Max. Daily Effluent Limit, µg/L		*	**7.2**	**1.0**	*

General Note: Unless noted otherwise, all concentrations given as total recoverable.

(1) Metals criteria are expressed as dissolved concentrations.
(2) Certain Basin Plan metals objectives are expressed as dissolved concentrations.
(3) EPA Translators used as default, and some calculated based on hardness.
(4) The total recoverable criteria are calculated by dividing the dissolved criteria by translator.
(5) ECA calculated per Section 1.4.B, Step 2 of SIP. This allows for the consideration of dilution.
(6) Acute and Chronic ECA Multiplier calculated a t 99th percentile per Section 1.4.B, Step 3 of SIP or per Sections 5.4.1 and 5.5.4 of the TSD.

(7) Assumes sampling frequency n is equal or less than 4.
(8) The probability basis for AMEL is 95th percentile per Section 1.4.B, Step 5 of SIP or Section 5.5.4 of the TSD.

Table 12. Calculations of Effluent limits for Hg and Se at DP 001

				CV = 0.6, long-term average			Aquatic Life Objective/limits, µg/L		Human Health Limits, µg/L		Permit Limit Concentration Limit, µg/L	
	Caltoxics, µg/L			Acute M	Chronic M	LTA						
	Fresh water		Human Health	0.321	0.527		**3.11**	**1.55**	**2.01**			
Constituent	CMC	CCC		Acute LTA	Chronic LTA		MDEL	AMEL	MDEL	AMEL	MDEL	AMEL
total recoverable Mercury			0.051						0.103	0.051	**0.103**	**0.051**
Selenium		5.0			2.635	***2.6***	8.19	4.08			**8.2**	**4.1**

5. Whole Effluent Toxicity (WET)

This Order does not specify WET limits but requires chronic toxicity monitoring. This Order, as in the previous Order, also requires the Discharger to conduct the accelerated monitoring as specified in Attachment E when the result of any single chronic toxicity test of the effluent exceeds 1.0 TUc. The monitoring data during the past three years (2005-2008) indicated that the monthly trigger of 1 TUc has not been exceeded.

D. Best Professional Judgment-Based Effluent Specifications for DP 001

For tertiary treated wastewater, the BOD_5 and TSS concentration limits are based on Best Professional Judgment. The technology-based secondary treatment standards specify BOD_5 and TSS concentration limits that are less stringent.

Table 13. Tertiary Effluent BOD_5 and TSS Limits

Constituent	Average Weekly	Average Monthly
Biochemical Oxygen Demand	30 mg/L	20 mg/L
Suspended Solids	30 mg/L	20 mg/L

E. Summary of Final Effluent Limitations for DP 001

1. Satisfaction of Anti-Backsliding Requirements

With the exception of free cyanide and aluminum, all effluent limitations in this Order are at least as stringent as the effluent limitations in the previous Order.

a. **Free Cyanide**: The average monthly effluent limitation for free cyanide specified in this Order is 4.6 µg/L; the average monthly limit in the previous Order (Order No. R8-2004-0065) was 4.3 µg/L. This change is in accordance with 40 CFR 122.44(l)(2)(i)(B)(*1*). Procedures specified in the SIP were used to determine the free cyanide effluent limitations in this and the prior Order. To calculate the free cyanide effluent limitations in this Order, effluent monitoring data were available and used to determine the appropriate coefficient of variation. In contrast, no effluent monitoring data for free cyanide were available for use in determining the coefficient of variation and effluent limitations in the prior Order. Instead, in determining free cyanide effluent limitations in the prior Order, a default coefficient of variation was used, as specified in the SIP. Table 15, below, shows a summary of free cyanide limitations in this Order. As shown in Table 15, while the average monthly limitation in this Order is less stringent than that in the prior Order, the maximum daily limit in this Order is more stringent than that in the prior Order. .

b. **Aluminum**: See discussion in section IV.C.3.b.

c. **Total Recoverable Mercury**: The average monthly and maximum daily effluent limitations for total recoverable mercury in the previous Order No. R8-2004-0065 were 0.04 and 0.08 µg/L, respectively. These limits were mistakenly calculated using an excel spreadsheet. The spreadsheet contains columns for inputting for freshwater acute or chronic criteria values and values for human health for the consumption of water and organisms or organisms only. After inputting the data, the spreadsheet automatically calculates the required effluent limitations. The SIP discusses two different calculation procedures for determining effluent limitations that are based on the acute and chronic criteria and for those that are based on the human health criteria. The criterion for mercury is only for human health protection. Mistakenly, this criterion was placed in the chronic criterion column. Consequently, the values of 0.04 and 0.08 µg/L were derived. . Had the human health criteria value been placed in the correct column, the calculated values would have been 0.051 µg/L for the average monthly effluent limitation and 0.103 µg/L for the maximum daily effluent limitation. The error was not realized until this permit renewal. Consequently, this Order includes the correctly calculated effluent limitations for total recoverable mercury. This change is in accordance with the SIP and with 40 CFR 122.44(l)(2)(i)(B)(2).

2. Satisfaction of Antidegradation Policy

Discharges are expected to be limited in duration and frequency and, if conducted in conformance with the requirements of this Order, will not result in a lowering of water quality. The discharges therefore conform to antidegradation requirements specified in Resolution No. 68-16, which incorporates the federal antidegradation policy at 40 CFR 131.12 where, as here, is it applicable.

3. Stringency of Requirements for Individual Pollutants

Water quality-based effluent limitations have been scientifically derived to implement water quality objectives that protect beneficial uses. Both the beneficial uses and the water quality objectives have been approved pursuant to federal law and are the applicable federal water quality standards. To the extent that toxic pollutant water quality-based effluent limitations were derived from the CTR, the CTR is the applicable standard pursuant to section 131.38. The scientific procedures for calculating the individual water quality-based effluent limitations for priority pollutants are based on the CTR-SIP, which was approved by USEPA on May 18, 2000. Apart from certain surface water standards changes resulting from the N/TDS Basin Plan amendment that do not materially affect the quality requirements for the discharges regulated by this Order, all beneficial uses and water quality objectives contained in the Basin Plan were approved under state law and submitted to and approved by USEPA prior to May 30, 2000. Any water quality objectives and beneficial uses submitted to USEPA prior to May 30, 2000, but not approved by USEPA before that date, are nonetheless "applicable water quality standards for purposes of the CWA" pursuant to section 131.21(c)(1). Collectively, this Order's restrictions on individual pollutants are no more stringent than required to implement the requirements of the CWA.

4. Summary of Final Effluent Limitations for DP 001

Table 14. Summary of Water Quality-Based Effluent Limits at DP 001

Parameter	Units	Effluent Limitations					Basis
		Average Monthly	Average Weekly	Max Daily	Instantaneous Minimum	Range	
BOD_5	mg/L	20	30	--	--	--	Basin Plan
Total Suspended Solids	mg/L	20	30	--	--	--	BP
pH	Std. unit	--	--	--		6.5-8.5	BP
Total Residual Chlorine	mg/L				0.1		BP
Coliform	MPN	--		2.2	--	--	Title 22

Table 14. Summary of Water Quality-Based Effluent Limits at DP 001

Parameter	Units	Effluent Limitations					Basis
		Average Monthly	Average Weekly	Max Daily	Instantaneous Minimum	Range	
				MPN			
Ammonia Nitrogen	mg/L	4.5					BP
Total Recoverable Selenium	µg/L	4.1		8.2			CTR
Free Cyanide	µg/L	4.7		7.2			CTR
Total Recoverable Mercury	µg/L	0.051		0.103			CTR
Dichlorobromomethane	µg/L	46		87			CTR

F. Interim Effluent Limitations for DP 001 - Not Applicable

G. Land Discharge Specifications – Not Applicable

Land discharge specifications are regulated under Order R8-2008-0008.

H. Reclamation Specifications – Not Applicable

Recycled water reuse is regulated under Order R8-2008-0008.

I. Stormwater Discharge Requirements

On April 17, 1997, the State Board adopted the General Industrial Storm Water Permit, Order No. 97-03-DWQ, NPDES No. CAS000001. This General Permit implements the Final Regulations (40 CFR 122, 123, and 124) for storm water runoff published on November 16, 1990 by EPA in compliance with Section 402(p) of the Clean Water Act (CWA). Industrial facilities, including POTW sites, are required to obtain NPDES Permits for storm water discharges. Accordingly, this Order incorporates requirements for the discharge of storm water from the Facility.

II. RATIONALE FOR RECEIVING WATER LIMITATIONS

A. Surface Water

The surface water receiving water limitations in this Order are based upon the water quality objectives contained in the Basin Plan. As such, they are required part of the proposed Order.

B. Groundwater – Not Applicable

III. RATIONALE FOR MONITORING AND REPORTING REQUIREMENTS

Section 122.48 of 40 CFR requires all NPDES permits to specify recording and reporting of monitoring results. Sections 13267 and 13383 of the CWC authorize the Regional Water Boards to require technical and monitoring reports. The MRP, Attachment E of this Order, establishes monitoring and reporting requirements to implement federal and State requirements. The following provides the rationale for the monitoring and reporting requirements contained in the MRP for this Facility.

A. Influent Monitoring

Current Order R8-2004-0065 does not contain influent monitoring requirements, as influent quality to the RWRFs is already being required to be monitored and reported under the waste discharge and producer/user reclamation requirement Order No. R8-2008-0008 for the EMWD RWRFs and Order No. R9-94-92 with amendments Addendum No. 1, 2. and 3 for the RCWD SRWRF.

B. Effluent Monitoring

The Discharger is required to conduct monitoring of the permitted discharges in order to evaluate compliance with permit conditions. Monitoring requirements are given in the proposed monitoring and reporting program (Attachment E). This provision requires compliance with the monitoring and reporting program, and is based on 40 CFR 122.44(i), 122.62, 122.63 and 124.5. The SMP is a standard requirement in almost all NPDES permits (including the proposed Order) issued by the Regional Water Board. In addition to containing definitions of terms, it specifies general sampling/analytical protocols and the requirements of reporting of spills, violations, and routine monitoring data in accordance with NPDES regulations, the California Water Code, and Regional Water Board's policies. The monitoring and reporting program also contains sampling program specific for the Discharger's wastewater treatment plant. It defines the sampling stations and frequency, pollutants to be monitored, and additional reporting requirements. Pollutants to be monitored include all pollutants for which effluent limitations are specified. Further, in accordance with Section 1.3 of the SIP, periodic monitoring is required for all priority pollutants defined by the CTR, for which criteria apply and for which no effluent limitations have been established, to evaluate

reasonable potential to cause or contribute to an excursion above a water quality standard.

C. Receiving Water Monitoring

1. Surface Water

Receiving water monitoring is required to determine compliance with receiving water limitations and to characterize the water quality of the receiving water. Requirements are based on the Basin Plan.

2. Groundwater - Not Applicable

D. Other Monitoring Requirements

1. Water Supply Monitoring – Not Applicable

Water supply monitoring requirements are specified in Order No. R8-2008-0008.

2. Biosolids Monitoring

Biosolids monitoring requirements are specified in Order No. R8-2008-0008.

3. Pretreatment Monitoring – Not Applicable

Pretreatment requirements and monitoring and reporting requirements are specified in Order No. R8-2008-0008 and Order No. R9-94-92 as amended.

IV. RATIONALE FOR PROVISIONS

A. Standard Provisions

Standard Provisions, which apply to all NPDES permits in accordance with section 122.41, and additional conditions applicable to specified categories of permits in accordance with section 122.42, are provided in Attachment D. The Discharger must comply with all standard provisions and with those additional conditions that are applicable under section 122.42.

Section 122.41(a)(1) and (b) through (n) establish conditions that apply to all State-issued NPDES permits. These conditions must be incorporated into the permits either expressly or by reference. If incorporated by reference, a specific citation to the regulations must be included in the Order. Section 123.25(a)(12) allows the state to omit or modify conditions to impose more stringent requirements. In accordance with section 123.25, this Order omits federal conditions that address enforcement authority specified in section0s 122.41(j)(5) and (k)(2) because the enforcement authority under the Water Code is more stringent. In lieu of these conditions, this Order incorporates by reference Water Code section 13387(e).

B. Special Provisions

1. Reopener Provisions

The provisions are based on 40 CFR Parts 122.44(c) and 123. The Regional Water Board may reopen the permit to modify permit conditions and requirements. Causes for modifications include the promulgation of new regulations, modification in sludge use or disposal practices, or adoption of new regulations by the State Water Board or Regional Water Board, including revisions to the Basin Plan.

2. Special Studies and Additional Monitoring Requirements

a. Toxicity Identification Evaluations or Toxicity Reduction Evaluations. This provision is based on the SIP, Section 4, Toxicity Control Provisions.

b. TDS Offsets
The Discharger may not be able to meet effluent limits of TDS and TIN for discharges to Temescal Creek. Consequently, the Order requires the Discharger to submit for approval by the Executive officer and implement an approved offset program for mitigating discharges of TDS/TIN in excess of effluent limitations specified in the Order.

3. Best Management Practices and Pollution Prevention

Best Management Practices and Pollution Prevention - The requirements are based on the SIP Section 2.4.5.1

4. Construction, Operation, and Maintenance Specifications – Not Applicable

Construction, Operation, and Maintenance Specifications are already included in Order No. R8-2008-0008.

5. Special Provisions for Municipal Facilities, POTWs Only – Not Applicable

This Section is already included in Order No. R8-2008-0008.

6. Other Special Provisions – Not Applicable

7. Compliance Schedules – Not Applicable

VI. PUBLIC PARTICIPATION

The Regional Water Board is considering the issuance of waste discharge requirements (WDRs) for Eastern Municipal Water District's Four Regional Water Reclamation Facilities. As a step in the WDR adoption process, the Regional Water Board staff has developed tentative WDRs. The Regional Water Board encourages public participation in the WDR adoption process.

A. Notification of Interested Parties

The Regional Water Board has notified the Discharger and interested agencies and persons of its intent to prescribe waste discharge requirements for the discharges and has provided them with an opportunity to submit their written comments and recommendations. Notification was provided through the posting of Notice of Public Hearing at the Perris City Hall; and at the Regional Water Board website: http://www.waterboards.ca.gov/santaana on March 25, 2009.

B. Written Comments

The staff determinations are tentative. Interested persons are invited to submit written comments concerning these tentative WDRs. Comments must be submitted either in person or by mail to the Executive Office at the Regional Water Board at the address above on the cover page of this Order.

To be fully responded to by staff and considered by the Regional Water Board, written comments should be received at the Regional Water Board offices by 5:00 p.m. on April 6, 2009.

Jane Qiu
California Regional Water Quality Control Board
Santa Ana Region
3737 Main Street, Suite 500
Riverside, CA 92501-3348

C. Public Hearing

The Regional Water Board will hold a public hearing on the tentative WDRs during its regular Board meeting on the following date and time and at the following location:

Date: April 24, 2009
Time: 9:00 A.M.
Location: City of Santa Ana
22 Civic Center Plaza
City of Santa Ana

Interested persons are invited to attend. At the public hearing, the Regional Water Board will hear testimony, if any, pertinent to the discharge, WDRs, and permit. Oral testimony will be heard; however, for accuracy of the record, important testimony should be in writing.

Please be aware that dates and venues may change. Our web address http://www.waterboards.ca.gov/santaana where you can access the current agenda for changes in dates and locations.

D. Waste Discharge Requirements Petitions

Any aggrieved person may petition the State Water Board to review the decision of the Regional Water Board regarding the final WDRs. The petition must be submitted within 30 days of the Regional Water Board's action to the following address:

State Water Resources Control Board
Office of Chief Counsel
P.O. Box 100, 1001 I Street
Sacramento, CA 95812-0100

E. Information and Copying

The Report of Waste Discharge (RWD), related documents, tentative effluent limitations and special provisions, comments received, and other information are on file and may be inspected at the address above at any time between 9:00 a.m. and 3:00 p.m. Monday through Friday. Copying of documents may be arranged through the Regional Water Board by calling (951) 320-2008.

F. Register of Interested Persons

Any person interested in being placed on the mailing list for information regarding the WDRs and NPDES permit should contact the Regional Water Board, reference this facility, and provide a name, address, and phone number.

G. Additional Information

Requests for additional information or questions regarding this Order should be directed to (951) 320-2008.

ATTACHMENT G - EPA PRIORITY POLLUTANT LIST

EPA PRIORITY POLLUTANT LIST					
Metals		**Acid Extractibles**		**Base/Neutral Extractibles (continuation)**	
1.	Antimony	45.	2-Chlorophenol	91.	Hexachloroethane
2.	Arsenic	46.	2,4-Dichlorophenol	92.	Indeno (1,2,3-cd) Pyrene
3.	Beryllium	47.	2,4-Dimethylphenol	93.	Isophorone
4.	Cadmium	48.	2-Methyl-4,6-Dinitrophenol	94.	Naphthalene
5a.	Chromium (III)	49.	2,4-Dinitrophenol	95.	Nitrobenzene
5b.	Chromium (VI)	50.	2-Nitrophenol	96.	N-Nitrosodimethylamine
6.	Copper	51.	4-Nitrophenol	97.	N-Nitrosodi-N-Propylamine
7.	Lead	52.	3-Methyl-4-Chlorophenol	98.	N-Nitrosodiphenylamine
8.	Mercury	53.	Pentachlorophenol	99.	Phenanthrene
9.	Nickel	54.	Phenol	100.	Pyrene
10.	Selenium	55.	2, 4, 6 – Trichlorophenol	101.	1,2,4-Trichlorobenzene
11.	Silver	**Base/Neutral Extractibles**		**Pesticides**	
12.	Thallium	56.	Acenaphthene	102.	Aldrin
13.	Zinc	57.	Acenaphthylene	103.	Alpha BHC
Miscellaneous		58.	Anthracene	104.	Beta BHC
14.	Cyanide, Free	59.	Benzidine	105.	Delta BHC
15.	Asbestos (not required unless requested)	60.	Benzo (a) Anthracene	106.	Gamma BHC
16.	2,3,7,8-Tetrachlorodibenzo-P-Dioxin (TCDD)	61.	Benzo (a) Pyrene	107.	Chlordane
Volatile Organics		62.	Benzo (b) Fluoranthene	108.	4, 4' - DDT
17.	Acrolein	63.	Benzo (g,h,i) Perylene	109.	4, 4' - DDE
18.	Acrylonitrile	64.	Benzo (k) Fluoranthene	110.	4, 4' - DDD
19.	Benzene	65.	Bis (2-Chloroethoxy) Methane	111.	Dieldrin
20.	Bromoform	66.	Bis (2-Chloroethyl) Ether	112.	Alpha Endosulfan
21.	Carbon Tetrachloride	67.	Bis (2-Chloroisopropyl) Ether	113.	Beta Endosulfan
22.	Chlorobenzene	68.	Bis (2-Ethylhexyl) Phthalate	114.	Endosulfan Sulfate
23.	Chlorodibromomethane	69.	4-Bromophenyl Phenyl Ether	115.	Endrin
24.	Chloroethane	70.	Butylbenzyl Phthalate	116.	Endrin Aldehyde
25.	2-Chloroethyl Vinyl Ether	71.	2-Chloronaphthalene	117.	Heptachlor
26.	Chloroform	72.	4-Chlorophenyl Phenyl Ether	118.	Heptachlor Epoxide
27.	Dichlorobromomethane	73.	Chrysene	119.	PCB 1016
28.	1,1-Dichloroethane	74.	Dibenzo (a,h) Anthracene	120.	PCB 1221
29.	1,2-Dichloroethane	75.	1,2-Dichlorobenzene	121.	PCB 1232
30.	1,1-Dichloroethylene	76.	1,3-Dichlorobenzene	122.	PCB 1242
31.	1,2-Dichloropropane	77.	1,4-Dichlorobenzene	123.	PCB 1248
32.	1,3-Dichloropropylene	78.	3,3'-Dichlorobenzidine	124.	PCB 1254
33.	Ethylbenzene	79.	Diethyl Phthalate	125.	PCB 1260
34.	Methyl Bromide	80.	Dimethyl Phthalate	126.	Toxaphene
35.	Methyl Chloride	81.	Di-n-Butyl Phthalate		
36.	Methylene Chloride	82.	2,4-Dinitrotoluene		
37.	1,1,2,2-Tetrachloroethane	83.	2-6-Dinitrotoluene		
38.	Tetrachloroethylene	84.	Di-n-Octyl Phthalate		
39.	Toluene	85.	1,2-Dipenylhydrazine		
40.	1,2-Trans-Dichloroethylene	86.	Fluoranthene		
41.	1,1,1-Trichloroethane	87.	Fluorene		
42.	1,1,2-Trichloroethane	88.	Hexachlorobenzene		
43.	Trichloroethylene	89.	Hexachlorobutadiene		
44.	Vinyl Chloride	90.	Hexachlorocyclopentadiene		

ATTACHMENT H – MINIMUM LEVELS

MINIMUM LEVELS IN PPB (µg/l)

Table 1- VOLATILE SUBSTANCES[1]	GC	GCMS
Acrolein	2.0	5
Acrylonitrile	2.0	2
Benzene	0.5	2
Bromoform	0.5	2
Carbon Tetrachloride	0.5	2
Chlorobenzene	0.5	2
Chlorodibromomethane	0.5	2
Chloroethane	0.5	2
Chloroform	0.5	2
Dichlorobromomethane	0.5	2
1,1 Dichloroethane	0.5	1
1,2 Dichloroethane	0.5	2
1,1 Dichloroethylene	0.5	2
1,2 Dichloropropane	0.5	1
1,3 Dichloropropylene (volatile)	0.5	2
Ethylbenzene	0.5	2
Methyl Bromide (*Bromomethane*)	1.0	2
Methyl Chloride (*Chloromethane*)	0.5	2
Methylene Chloride (*Dichloromethane*)	0.5	2
1,1,2,2 Tetrachloroethane	0.5	1
Tetrachloroethylene	0.5	2
Toluene	0.5	2
trans-1,2 Dichloroethylene	0.5	1
1,1,1 Trichloroethane	0.5	2
1,1,2 Trichloroethane	0.5	2
Trichloroethylene	0.5	2
Vinyl Chloride	0.5	2
1,2 Dichlorobenzene (volatile)	0.5	2
1,3 Dichlorobenzene (volatile)	0.5	2
1,4 Dichlorobenzene (volatile)	0.5	2

Selection and Use of Appropriate ML Value:

ML Selection: When there is more than one ML value for a given substance, the discharger may select any one of those ML values, and their associated analytical methods, listed in this Attachment that are below the calculated effluent limitation for compliance determination. If no ML value is below the effluent limitation, then the discharger shall select the lowest ML value, and its associated analytical method, listed in the PQL Table.

ML Usage: The ML value in this Attachment represents the lowest quantifiable concentration in a sample based on the proper application of all method-based analytical procedures and the absence of any matrix interferences. Assuming that all method-specific analytical steps are followed, the ML value will also represent, after the appropriate application of method-specific factors, the lowest standard in the calibration curve for that specific analytical technique. Common analytical practices sometimes require different treatment of the sample relative to calibration standards.
Note: chemical names in parenthesis and italicized is another name for the constituent.

---

1 *The normal method-specific factor for these substances is 1, therefore, the lowest standard concentration in the calibration curve is equal to the above ML value for each substance.*

MINIMUM LEVELS IN PPB (μg/l)

Table 2 – Semi-Volatile Substances[2]	GC	GCMS	LC
2-Chloroethyl vinyl ether	1	1	
2 Chlorophenol	2	5	
2,4 Dichlorophenol	1	5	
2,4 Dimethylphenol	1	2	
4,6 Dinitro-2-methylphenol	10	5	
2,4 Dinitrophenol	5	5	
2- Nitrophenol		10	
4- Nitrophenol	5	10	
4 Chloro-3-methylphenol	5	1	
2,4,6 Trichlorophenol	10	10	
Acenaphthene	1	1	0.5
Acenaphthylene		10	0.2
Anthracene		10	2
Benzidine		5	
Benzo (a) Anthracene (*1,2 Benzanthracene*)	10	5	
Benzo(a) pyrene (*3,4 Benzopyrene*)		10	2
Benzo (b) Flouranthene (*3,4 Benzofluoranthene*)		10	10
Benzo(g,h,i)perylene		5	0.1
Benzo(k)fluoranthene		10	2
bis 2-(1-Chloroethoxyl) methane		5	
bis(2-chloroethyl) ether	10	1	
bis(2-Chloroisopropyl) ether	10	2	
bis(2-Ethylhexyl) phthalate	10	5	
4-Bromophenyl phenyl ether	10	5	
Butyl benzyl phthalate	10	10	
2-Chloronaphthalene		10	
4-Chlorophenyl phenyl ether		5	
Chrysene		10	5
Dibenzo(a,h)-anthracene		10	0.1
1,2 Dichlorobenzene (semivolatile)	2	2	
1,3 Dichlorobenzene (semivolatile)	2	1	
1,4 Dichlorobenzene (semivolatile)	2	1	
3,3-Dichlorobenzidine		5	
Diethyl phthalate	10	2	
Dimethyl phthalate	10	2	
di-n-Butyl phthalate		10	
2,4 Dinitrotoluene	10	5	
2,6 Dinitrotoluene		5	
di-n-Octyl phthalate		10	
1,2-Diphenylhydrazine		1	
Fluoranthene	10	1	0.05
Fluorene		10	0.1
Hexachloro-cyclopentadiene	5	5	
1,2,4 Trichlorobenzene	1	5	

MINIMUM LEVELS IN PPB (µg/l)

Table 2 - SEMI-VOLATILE SUBSTANCES[2]	GC	GCMS	LC	COLOR
Pentachlorophenol	1	5		
Phenol [3]	1	1		50
Hexachlorobenzene	5	1		
Hexachlorobutadiene	5	1		
Hexachloroethane	5	1		
Indeno(1,2,3,cd)-pyrene		10	0.05	
Isophorone	10	1		
Naphthalene	10	1	0.2	
Nitrobenzene	10	1		
N-Nitroso-dimethyl amine	10	5		
N-Nitroso -di n-propyl amine	10	5		
N-Nitroso diphenyl amine	10	1		
Phenanthrene		5	0.05	
Pyrene		10	0.05	

Table 3– INORGANICS[4]	FAA	GFAA	ICP	ICPMS	SPGFAA	HYDRIDE	CVAA	COLOR	DCP
Antimony	10	5	50	0.5	5	0.5			1000
Arsenic		2	10	2	2	1		20	1000
Beryllium	20	0.5	2	0.5	1				1000
Cadmium	10	0.5	10	0.25	0.5				1000
Chromium (total)	50	2	10	0.5	1				1000
Chromium VI	5							10	
Copper	25	5	10	0.5	2				1000
Lead	20	5	5	0.5	2				10000
Mercury				0.5			0.2		
Nickel	50	5	20	1	5				1000
Selenium		5	10	2	5	1			1000
Silver	10	1	10	0.25	2				1000
Thallium	10	2	10	1	5				1000
Zinc	20		20	1	10				1000
Cyanide								5	

2 *With the exception of phenol by colorimetric technique, the normal method-specific factor for these substances is 1000, therefore, the lowest standards concentration in the calibration curve is equal to the above ML value for each substance multiplied by 1000.*

3 *Phenol by colorimetric technique has a factor of 1.*

4 *The normal method-specific factor for these substances is 1, therefore, the lowest standard concentration in the calibration curve is equal to the above ML value for each substance.*

MINIMUM LEVELS IN PPB (μg/l)

Table 4- PESTICIDES – PCBs[5]	GC
Aldrin	0.005
alpha–BHC (*a-Hexachloro-cyclohexane*)	0.01
beta–BHC (*b-Hexachloro-cyclohexane*)	0.005
Gamma–BHC (*Lindane; g-Hexachloro-cyclohexane*)	0.02
Delta-BHC (*d-Hexachloro-cyclohexane*)	0.005
Chlordane	0.1
4,4'-DDT	0.01
4,4'-DDE	0.05
4,4'-DDD	0.05
Dieldrin	0.01
Alpha-Endosulfan	0.02
Beta-Endosulfan	0.01
Endosulfan Sulfate	0.05
Endrin	0.01
Endrin Aldehyde	0.01
Heptachlor	0.01
Heptachlor Epoxide	0.01
PCB 1016	0.5
PCB 1221	0.5
PCB 1232	0.5
PCB 1242	0.5
PCB 1248	0.5
PCB 1254	0.5
PCB 1260	0.5
Toxaphene	0.5

Techniques:
GC - Gas Chromatography
GCMS - Gas Chromatography/Mass Spectrometry
HRGCMS - High Resolution Gas Chromatography/Mass Spectrometry (i.e., EPA 1613, 1624, or 1625)
LC - High Pressure Liquid Chromatography
FAA - Flame Atomic Absorption
GFAA - Graphite Furnace Atomic Absorption
HYDRIDE - Gaseous Hydride Atomic Absorption
CVAA - Cold Vapor Atomic Absorption
ICP - Inductively Coupled Plasma
ICPMS - Inductively Coupled Plasma/Mass Spectrometry
SPGFAA - Stabilized Platform Graphite Furnace Atomic Absorption (i.e., EPA 200.9)
DCP - Direct Current Plasma
COLOR - Colorimetric

5 *The normal method-specific factor for these substances is 100, therefore, the lowest standard concentration in the calibration curve is equal to the above ML value for each substance multiplied by 100.*

ATTACHMENT I – TRIGGERS FOR MONITORING PRIORITY POLLUTANTS

	CONSTITUENT	µg/L
1	***Antimony***	***6***
2	***Arsenic***	***50***
3	***Beryllium***	***4***
4	Cadmium	5.3
5a	Chromium III	176
5b	Chromium VI	5.5
6	Copper	21
7	Lead	22
8	Mercury	0.026
9	Nickel	45
10	Selenium	2.5
11	Silver	6.2
12	***Thallium***	***2***
13	Zinc	104
14	Cyanide	2.6
15	Asbestos	--
16	2,3,7,8-TCDD (Dioxin)	0.000000007
17	Acrolein	390
18	Acrylonitrile	0.33
19	***Benzene***	***1***
20	Bromoform	180
21	***Carbon Tetrachloride***	***0.5***
22	Chlorobenzene	10500
23	Chlorodibromomethane	17
24	Chloroethane	--
25	2-Chloroethyl vinyl ether	--
26	Chloroform	--
27	Dichlorobromomethane	23
28	***1,1-Dichloroethane***	***5***
29	***1,2-Dichloroethane***	***0.5***
30	1,1-Dichloroethylene	1.6
31	***1,2-Dichloropropane***	***5***
32	***1,3-Dichloropropylene***	***0.5***
33	***Ethylbenzene***	***300***
34	Methyl Bromide	2000
35	Methyl Chloride	--
36	Methylene Chloride	800
37	***1,1,2,2-Tetratchloroethane***	***1***

	CONSTITUENT	µg/L
38	Tetratchloroethylene	4.43
39	***Toluene***	***150***
40	***1,2,-Trans-dichloroethylene***	***10***
41	***1,1,1-Trichloroethane***	***200***
42	***1,1,2-Trichloroethane***	***5***
43	***Trichloroethylene***	***5***
44	***Vinyl Chloride***	***0.5***
45	2-Chlorophenol	200
46	2,4-Dichlorophenol	395
47	2,4-Dimethylphenol	1150
48	2-Methy-4,6-Dinitrophenol	383
49	2,4-Dinitrophenol	7000
50	2-Nitrophenol	--
51	4-Nitrophenol	--
52	3-Methyl-4-Chlorophenol	--
53	***Pentachlorophenol***	***1***
54	Phenol	2,300,000
55	2,4,6-Trichlorophenol	3.3
56	Acenapthene	1,350
57	Acenapthylene	--
58	Anthracene	55,000
59	Benzidine	0.00027
60	Benzo (a) anthracene	0.025
61	Benzo (a) pyrene	0.025
62	Benzo (b) fluoranthene	0.025
63	Benzo (g,h,i) pyrylene	--
64	Benzo (k) fluorantene	0.025
65	Bis (2-Chloroethoxy) methane	--
66	Bis (2-Chloroethyl) ether	0.7
67	Bis (2-Chloroisopropyl) ether	85,000
68	Bis (2-ethyhexyl) phthalate	3.0
69	4-Bromophenyl phenyl ether	--
70	Butyl benzyl phthalate	2600
71	2- Chloronapthalene	2150
72	4-Chlrorphenyl phenyl ether	--
73	Chrysene	0.025
74	Dibenzo (a,h) anthracene	0.025
75	***1,2-Dichlorobenzene***	***600***

ATTACHMENT I. -Continued

	CONSTITUENT	µg/L
76	1,3-Dichlorobenzene	1,300
77	***1,4-Dichlorobenzene***	***5***
78	3,3-Dichlorobenzidine	0.039
79	Diethyl phthalate	60,000
80	Dimethyl phthalate	1,450,000
81	Di-N-butyl phthalate	6,000
82	2,4-Dinitrotoluene	4.6
83	2,6-Dinitrotoluene	--
84	Di-N-octyl phthalate	--
85	1,2-Diphenylhydrazine	0.27
86	Fluoranthene	185
87	Fluorene	7,000
88	Hexachlorobenzene	0.00039
89	Hexachlorobutadiene	25
90	***Hexachlorocyclopentadiene***	***50***
91	Hexachloroethane	4.5
92	Indeno (1,2,3-cd) pyrene	0.025
93	Isophorone	300
94	***Naphthalene***	***17***
95	Nitrobenzene	950
96	***N-Nitrosodimethylamine***	***0.01***
97	***N-Nitrosodi-N-propylamine***	***0.01***
98	N-Nitrosodiphenylamine	8
99	Phenantrene	--

	CONSTITUENT	µg/L
100	Pyrene	5,500
101	***1,2,4 -Trichlorobenzene***	***5***
102	Aldrin	0.00007
103	BHC Alpha	0.0065
104	BHC Beta	0.023
105	BHC Gamma	0.032
106	BHC Delta	--
107	Chlordane	0.0003
108	4,4-DDT	0.0003
109	4,4-DDE	0.0003
110	4,4-DDD	0.00042
111	Dieldrin	0.00007
112	Endosulfan Alpha	0.028
113	Endosulfan Beta	0.028
114	Endosulfan Sulfate	120
115	Endrin	0.018
116	Endrin Aldehyde	0.42
117	Heptachlor	0.00011
118	Heptachlor Epoxide	0.000055
119	PCB 1016	0.000085
120	PCB 1221	0.000085
125	PCB 1260	0.000085
126	Toxaphene	0.0001
127	***Perchlorate***	***4***

Notes:

1. For constituents not shown italicized, the values shown in the Table are fifty percent of the most stringent applicable receiving water objectives (freshwater or human health (consumption of water and organisms) as specified for that pollutant in 40 CFR 131.38[1]).
2. For constituents shown bold and italicized, the values shown in the Table are based on the California Department of Public Health maximum contaminant levels (MCLs) or Notification Level. Notification Level based trigger is underlined.
3. For hardness dependent metals, the hardness value used is 191 mg/L as 5th percentile of effluent flows and for pentachlorophenol, the pH value used is 7.5 standard units.

[1] *See Federal Register/ Vol. 65, No. 97 / Thursday, May 18, 2000 / Rules and Regulations.*

ATTACHMENT J – STORMWATER POLLUTION PREVENTION PLAN REQUIREMENTS

1. *Implementation Schedule*

The storm water pollution prevention plan (SWPPP) shall be updated and implemented in a timely manner, but in no case later than October 30, 2008.

2. *Objectives*

The SWPPP has two major objectives: (a) to identify and evaluate sources of pollutants associated with industrial activities that may affect the quality of storm water discharges and authorized non-storm water discharges from the facility; and (b) to identify and implement site-specific best management practices (BMPs) to reduce or prevent pollutants associated with industrial activities in storm water discharges and authorized non-storm water discharges. BMPs may include a variety of pollution prevention measures or other low-cost pollution control measures. They are generally categorized as non-structural BMPs (activity schedules, prohibitions of practices, maintenance procedures, and other low-cost measures) and as structural BMPs (treatment measures, run-off controls, over-head coverage). To achieve these objectives, Dischargers should consider the five phase process for SWPPP development and implementation as shown in Table A, below.

The SWPPP requirements are designed to be sufficiently flexible to meet the various needs of the facility. SWPPP requirements that are not applicable to the facility should not be included in the SWPPP.

A facility's SWPPP is a written document that shall contain a compliance activity schedule, a description of industrial activities and pollutant sources, descriptions of BMPs, drawings, maps, and relevant copies or references of parts of other plans. The SWPPP shall be revised whenever appropriate and shall be readily available for review by facility employees or Regional Water Board inspectors.

3. *Planning and Organization*

a. Pollution Prevention Team

The SWPPP shall identify a specific individual or individuals and their positions within the facility organization as members of a storm water pollution prevention team responsible for developing the SWPPP, assisting the facility manager in SWPPP implementation and revision, and conducting all monitoring program activities required in the Stormwater monitoring program of Order No. R8-2009-0014. The SWPPP shall clearly identify the storm water pollution prevention related responsibilities, duties, and activities of each team member.

b. Review Other Requirements and Existing Facility Plans

The SWPPP may incorporate or reference the appropriate elements of other regulatory requirements. The Discharger shall review all local, state, and federal requirements that impact, complement, or are consistent with the requirements of Order No. R8-2009-0014. The Discharger shall identify any existing facility plans that contain storm water pollutant control measures or relate to the requirements of Order No. R8-2009-0014. As examples, Dischargers whose facilities are subject to Federal Spill Prevention Control and Countermeasures' requirements should already have instituted a plan to control spills of certain hazardous materials. Similarly, the Discharger whose facilities are subject to air quality related permits and regulations may already have evaluated industrial activities that generate dust or particulates.

4. *Site Map*

The SWPPP shall include a site map. The site map shall be provided on an 8-1/2 x 11 inch or larger sheet and include notes, legends, and other data as appropriate to ensure that the site map is clear and understandable. If necessary, the Discharger may provide the required information on multiple site maps. The following information shall be included on the site map:

a. The facility boundaries; the outline of all storm water drainage areas within the facility boundaries; portions of the drainage area impacted by run-on from surrounding areas; and direction of flow of each drainage area, on-site surface water bodies, and areas of soil erosion. The map shall also identify nearby water bodies (such as rivers, lakes, ponds) and municipal storm drain inlets where the facility's storm water discharges and authorized non-storm water discharges may be received.

b. The location of the storm water collection and conveyance system, associated points of discharge, and direction of flow. Include any structural control measures that affect storm water discharges, authorized non-storm water discharges, and run-on. Examples of structural control measures are catch basins, berms, detention ponds, secondary containment, oil/water separators, diversion barriers, etc.

c. An outline of all impervious areas of the facility, including paved areas, buildings, covered storage areas, or other roofed structures.

d. Locations where materials are directly exposed to precipitation and the locations where significant spills or leaks identified in Section 6.a.(4)., below, have occurred.

e. Areas of industrial activity. This shall include the locations of all storage areas and storage tanks, shipping and receiving areas, fueling areas, vehicle and equipment storage/maintenance areas, material handling and processing areas, waste treatment and disposal areas, dust or particulate generating areas, cleaning and rinsing areas, and other areas of industrial activity which are potential pollutant sources.

5. *List of Significant Materials*

The SWPPP shall include a list of significant materials handled and stored at the site. For each material on the list, describe the locations where the material is being stored, received, shipped, and handled, as well as the typical quantities and frequency. Materials shall include raw materials, intermediate products, final or finished products, recycled materials, and waste or disposed materials.

6. *Description of Potential Pollutant Sources*

a. The SWPPP shall include a narrative description of the facility's industrial activities, as identified in Section 4.e., above, associated potential pollutant sources, and potential pollutants that could be discharged in storm water discharges or authorized non-storm water discharges. At a minimum, the following items related to a facility's industrial activities shall be considered:

1) Industrial Processes

Describe each industrial process, the type, characteristics, and quantity of significant materials used in or resulting from the process, and a description of the processes (manufacturing or treatment), cleaning, rinsing, recycling, disposal, or other activities related to the process. Where applicable, areas protected by containment structures and the corresponding containment capacity shall be described.

2) Material Handling and Storage Areas

Describe each handling and storage area, type, characteristics, and quantity of significant materials handled or stored, description of the shipping, receiving, and loading procedures, and the spill or leak prevention and response procedures. Where applicable, areas protected by containment structures and the corresponding containment capacity shall be described.

3) Dust and Particulate Generating Activities

Describe all industrial activities that generate dust or particulates that may be deposited within the facility's boundaries and identify their discharge locations; the characteristics of dust and particulate pollutants; the approximate quantity of dust and particulate pollutants that may be deposited within the facility boundaries; and a description of the primary areas of the facility where dust and particulate pollutants would settle.

4) Significant Spills and Leaks

Describe materials that have spilled or leaked in significant quantities in storm water discharges or non-storm water discharges. Include toxic chemicals (listed in 40 Code of Federal Regulations [CFR] Part 302) that have been discharged to storm water as reported on U.S. Environmental Protection Agency (U.S. EPA) Form R, and oil and hazardous substances in excess of reportable quantities (see 40 CFR, Parts 110, 117, and 302).

The description shall include the type, characteristics, and approximate quantity of the material spilled or leaked, the cleanup or remedial actions that have occurred or are planned, the approximate remaining quantity of materials that may be exposed to storm water or non-storm water discharges, and the preventative measures taken to ensure spills or leaks do not reoccur. Such list shall be updated as appropriate during the term of Order No. R8-2009-0014.

5) Non-Storm Water Discharges

The Discharger shall investigate the facility to identify all non-storm water discharges and their sources. As part of this investigation, all drains (inlets and outlets) shall be evaluated to identify whether they connect to the storm drain system.

All non-storm water discharges shall be described. This shall include the source, quantity, frequency, and characteristics of the non-storm water discharges and associated drainage area.

Non-storm water discharges that contain significant quantities of pollutants or that do not meet the conditions of Order No. R8-2009-0014 are prohibited. (Examples of prohibited non-storm water discharges are contact and non-contact cooling water, boiler blowdown, rinse water, wash water, etc.). The SWPPP must include BMPs to prevent or reduce contact of non-storm water discharges with significant materials or equipment.

6) Soil Erosion

Describe the facility locations where soil erosion may occur as a result of industrial activity, storm water discharges associated with industrial activity, or authorized non-storm water discharges.

b. The SWPPP shall include a summary of all areas of industrial activities, potential pollutant sources, and potential pollutants. This information should be summarized similar to Table B below. The last column of Table B, "Control Practices", should be completed in accordance with Section 8., below.

7. *Assessment of Potential Pollutant Sources*

   a. The SWPPP shall include a narrative assessment of all industrial activities and potential pollutant sources as described in Section 6., above, to determine:

      1) Which areas of the facility are likely sources of pollutants in storm water discharges and authorized non-storm water discharges, and

      2) Which pollutants are likely to be present in storm water discharges and authorized non-storm water discharges. The Discharger shall consider and evaluate various factors when performing this assessment such as current storm water BMPs; quantities of significant materials handled, produced, stored, or disposed of; likelihood of exposure to storm water or authorized non-storm water discharges; history of spill or leaks; and run-on from outside sources.

   b. The Discharger shall summarize the areas of the facility that are likely sources of pollutants and the corresponding pollutants that are likely to be present in storm water discharges and authorized non-storm water discharges.

      The Discharger is required to develop and implement additional BMPs as appropriate and necessary to prevent or reduce pollutants associated with each pollutant source. The BMPs will be narratively described in Section 8., below.

8. *Storm Water Best Management Practices*

   The SWPPP shall include a narrative description of the storm water BMPs to be implemented at the facility for each potential pollutant and its source identified in the site assessment phase (Sections 6. and 7., above). The BMPs shall be developed and implemented to reduce or prevent pollutants in storm water discharges and authorized non-storm water discharges. Each pollutant and its source may require one or more BMPs. Some BMPs may be implemented for multiple pollutants and their sources, while other BMPs will be implemented for a very specific pollutant and its source.

   The description of the BMPs shall identify the BMPs as (1) existing BMPs, (2) existing BMPs to be revised and implemented, or (3) new BMPs to be implemented. The description shall also include a discussion on the effectiveness of each BMP to reduce or prevent pollutants in storm water discharges and authorized non-storm water discharges. The SWPPP shall provide a summary of all BMPs implemented for each pollutant source. This information should be summarized similar to Table B.

   The Discharger shall consider the following BMPs for implementation at the facility:

a. Non-Structural BMPs: Non-structural BMPs generally consist of processes, prohibitions, procedures, schedule of activities, etc., that prevent pollutants associated with industrial activity from contacting with storm water discharges and authorized non-storm water discharges. They are considered low technology, cost-effective measures. The Discharger should consider all possible non-structural BMPs options before considering additional structural BMPs (see Section 8.b., below). Below is a list of non-structural BMPs that should be considered:

1) Good Housekeeping: Good housekeeping generally consist of practical procedures to maintain a clean and orderly facility.

2) Preventive Maintenance: Preventive maintenance includes the regular inspection and maintenance of structural storm water controls (catch basins, oil/water separators, etc.) as well as other facility equipment and systems.

3) Spill Response: This includes spill clean-up procedures and necessary clean-up equipment based upon the quantities and locations of significant materials that may spill or leak.

4) Material Handling and Storage: This includes all procedures to minimize the potential for spills and leaks and to minimize exposure of significant materials to storm water and authorized non-storm water discharges.

5) Employee Training: This includes training of personnel who are responsible for (a) implementing activities identified in the SWPPP, (b) conducting inspections, sampling, and visual observations, and (c) managing storm water. Training should address topics such as spill response, good housekeeping, and material handling procedures, and actions necessary to implement all BMPs identified in the SWPPP. The SWPPP shall identify periodic dates for such training. Records shall be maintained of all training sessions held.

6) Waste Handling/Recycling: This includes the procedures or processes to handle, store, or dispose of waste materials or recyclable materials.

7) Record Keeping and Internal Reporting: This includes the procedures to ensure that all records of inspections, spills, maintenance activities, corrective actions, visual observations, etc., are developed, retained, and provided, as necessary, to the appropriate facility personnel.

8) Erosion Control and Site Stabilization: This includes a description of all sediment and erosion control activities. This may include the planting and maintenance of vegetation, diversion of run-on and runoff, placement of sandbags, silt screens, or other sediment control devices, etc.

9) Inspections: This includes, in addition to the preventative maintenance inspections identified above, an inspection schedule of all potential pollutant sources. Tracking

and follow-up procedures shall be described to ensure adequate corrective actions are taken and SWPPPs are made.

10) Quality Assurance: This includes the procedures to ensure that all elements of the SWPPP and Monitoring Program are adequately conducted.

b. Structural BMPs: Where non-structural BMPs as identified in Section 8.a., above, are not effective, structural BMPs shall be considered. Structural BMPs generally consist of structural devices that reduce or prevent pollutants in storm water discharges and authorized non-storm water discharges. Below is a list of structural BMPs that should be considered:

1) Overhead Coverage: This includes structures that provide horizontal coverage of materials, chemicals, and pollutant sources from contact with storm water and authorized non-storm water discharges.

2) Retention Ponds: This includes basins, ponds, surface impoundments, bermed areas, etc., that do not allow storm water to discharge from the facility.

3) Control Devices: This includes berms or other devices that channel or route run-on and runoff away from pollutant sources.

4) Secondary Containment Structures: This generally includes containment structures around storage tanks and other areas for the purpose of collecting any leaks or spills.

5) Treatment: This includes inlet controls, infiltration devices, oil/water separators, detention ponds, vegetative swales, etc., that reduce the pollutants in storm water discharges and authorized non-storm water discharges.

9. *Annual Comprehensive Site Compliance Evaluation*

The Discharger shall conduct one comprehensive site compliance evaluation in each reporting period (July 1-June 30). Evaluations shall be conducted within 8-16 months of each other. The SWPPP shall be revised, as appropriate, and the revisions implemented within 90 days of the evaluation. Evaluations shall include the following:

a. A review of all visual observation records, inspection records, and sampling and analysis results.

b. A visual inspection of all potential pollutant sources for evidence of, or the potential for, pollutants entering the drainage system.

c. A review and evaluation of all BMPs (both structural and non-structural) to determine whether the BMPs are adequate, properly implemented and maintained, or whether additional BMPs are needed. A visual inspection of equipment needed to implement the SWPPP, such as spill response equipment, shall be included.

d. An evaluation report that includes, (1) identification of personnel performing the evaluation, (2) the date(s) of the evaluation, (3) necessary SWPPP revisions, (4) schedule, as required in Section 10.e, below, for implementing SWPPP revisions, (5) any incidents of non-compliance and the corrective actions taken, and (6) a certification that the Discharger is in compliance with Order No. R8-2009-0014. If the above certification cannot be provided, explain in the evaluation report why the Discharger is not in compliance with this order. The evaluation report shall be submitted as part of the annual report, retained for at least five years, and signed and certified in accordance with Attachment D, Standard Provision, Section V Reporting, Subsection B. Signatory and Certification Requirements of Order No. R8-2009-0014.

10. *SWPPP General Requirements*

a. The SWPPP shall be retained on site and made available upon request by a representative of the Regional Water Board and/or local storm water management agency (local agency) which receives the storm water discharges.

b. The Regional Water Board and/or local agency may notify the Discharger when the SWPPP does not meet one or more of the minimum requirements of this section. As requested by the Regional Water Board and/or local agency, the Discharger shall submit a SWPPP revision and implementation schedule that meets the minimum requirements of this section to the Regional Water Board and/or local agency that requested the SWPPP revisions. Within 14 days after implementing the required SWPPP revisions, the Discharger shall provide written certification to the Regional Water Board and/or local agency that the revisions have been implemented.

c. The SWPPP shall be revised, as appropriate, and implemented prior to changes in industrial activities which (1) may significantly increase the quantities of pollutants in storm water discharge, (2) cause a new area of industrial activity at the facility to be exposed to storm water, or (3) begin an industrial activity which would introduce a new pollutant source at the facility.

d. The SWPPP shall be revised and implemented in a timely manner, but in no case more than 90 days after a Discharger determines that the SWPPP is in violation of any requirement(s) of Order No. R8-2009-0014.

e. When any part of the SWPPP is infeasible to implement by the deadlines specified in Order No. R8-2009-0014, due to proposed significant structural changes, the Discharger shall submit a report to the Regional Water Board prior to the applicable deadline that (1) describes the portion of the SWPPP that is infeasible to implement by the deadline, (2) provides justification for a time extension, (3) provides a schedule for completing and implementing that portion of the SWPPP, and (4) describes the BMPs that will be implemented in the interim period to reduce or prevent pollutants in storm water discharges and authorized non-storm water discharges. Such reports are subject to Regional Water Board approval and/or modifications. The Discharger shall provide written notification to the Regional Water Board within 14 days after the SWPPP revisions are implemented.

f. The SWPPP shall be provided, upon request, to the Regional Water Board. The SWPPP is considered a report that shall be available to the public by the Regional Water Board under Section 308(b) of the Clean Water Act.

TABLE A

FIVE PHASES FOR DEVELOPING AND IMPLEMENTING INDUSTRIAL STORM WATER POLLUTION PREVENTION PLANS

PLANNING AND ORGANIZATION

*Form pollution prevention team
*Review other plans

ASSESSMENT PHASE

*Develop a site map
*Identify potential pollutant sources
*Inventory of materials and chemicals
*List significant spills and leaks
*Identify non-storm water discharges
*Assess pollutant risks

BEST MANAGEMENT PRACTICES IDENTIFICATION PHASE

*Non-structural BMPs
*Structural BMPs
*Select activity and site-specific BMPs

IMPLEMENTATION PHASE

*Train employees
*Implement BMPs
*Conduct record keeping and reporting

EVALUATION / MONITORING

*Conduct annual site evaluation
*Review monitoring information
*Evaluate BMPs
*Review and revise SWPPP

TABLE B

EXAMPLE

ASSESSMENT OF POTENTIAL POLLUTION SOURCES AND CORRESPONDING BEST MANAGEMENT PRACTICES SUMMARY

AREA	ACTIVITY	POLLUTANT SOURCE	POLLUTANT	BEST MANAGEMENT PRACTICES
Vehicle & equipment fueling	Fueling	Spills and leaks during delivery	Fuel oil	- Use spill and overflow protection - Minimize run-on of storm water into the fueling area - Cover fueling area - Use dry cleanup methods rather than hosing down area - Implement proper spill prevention control program - Implement adequate preventative maintenance program to prevent tank and line leaks - Inspect fueling areas regularly to detect problems before they occur - Train employees on proper fueling, cleanup, and spill response techniques.
		Spills caused by topping off fuel oil	Fuel oil	
		Hosing or washing down fuel area	Fuel oil	
		Leaking storage tanks	Fuel oil	
		Rainfall running off fueling areas, and rainfall running onto and off fueling area	Fuel oil	

ATTACHMENT K – STORMWATER MONITORING AND REPORTING REQUIREMENTS

1. *Implementation Schedule*

The Discharger shall continue to implement their existing Stormwater monitoring program and implement any necessary revisions to their Stormwater monitoring program in a timely manner, but in no case later than December 30, 2009. The Discharger may use the monitoring results conducted in accordance with their existing Stormwater monitoring program to satisfy the pollutant/parameter reduction requirements in Section 5.c., below, and Sampling and Analysis Exemptions and Reduction Certifications in Section 10, below.

2. *Objectives*

The objectives of the monitoring program are to:

a. Ensure that storm water discharges are in compliance with waste discharge requirements specified in Order No. R8-2009-0014.

b. Ensure practices at the facility to reduce or prevent pollutants in storm water discharges and authorized non-storm water discharges are evaluated and revised to meet changing conditions.

c. Aid in the implementation and revision of the SWPPP required by Attachment "J" Stormwater Pollution Prevention Plan of Order No. R8-2009-0014.

d. Measure the effectiveness of best management practices (BMPs) to prevent or reduce pollutants in storm water discharges and authorized non-storm water discharges. Much of the information necessary to develop the monitoring program, such as discharge locations, drainage areas, pollutant sources, etc., should be found in the Storm Water Pollution Prevention Plan (SWPPP). The facility's monitoring program shall be a written, site-specific document that shall be revised whenever appropriate and be readily available for review by employees or Regional Water Board inspectors.

3. *Non-Storm Water Discharge Visual Observations*

a. The Discharger shall visually observe all drainage areas within their facility for the presence of unauthorized non-storm water discharges;

b. The Discharger shall visually observe the facility's authorized non-storm water discharges and their sources;

c. The visual observations required above shall occur quarterly, during daylight hours, on days with no storm water discharges, and during scheduled facility operating hours[1]. Quarterly visual observations shall be conducted in each of the following periods: January-March, April-June, July-September, and October-December. The Discharger shall conduct quarterly visual observations within 6-18 weeks of each other.

d. Visual observations shall document the presence of any discolorations, stains, odors, floating materials, etc., as well as the source of any discharge. Records shall be maintained of the visual observation dates, locations observed, observations, and response taken to eliminate unauthorized non-storm water discharges and to reduce or prevent pollutants from contacting non-storm water discharges. The SWPPP shall be revised, as necessary, and implemented in accordance with Attachment "J" Stormwater Pollution Prevention Plan Requirements of Order No. R8-2009-0014.

4. *Storm Water Discharge Visual Observations*

a. With the exception of those facilities described in Section 4.d., below, the Discharger shall visually observe storm water discharges from one storm event per month during the wet season (October 1-May 30). These visual observations shall occur during the first hour of discharge and at all discharge locations. Visual observations of stored or contained storm water shall occur at the time of release.

b. Visual observations are only required of storm water discharges that occur during daylight hours that are preceded by at least three (3) working days[2] without storm water discharges and that occur during scheduled facility operating hours.

c. Visual observations shall document the presence of any floating and suspended material, oil and grease, discolorations, turbidity, odor, and source of any pollutants. Records shall be maintained of observation dates, locations observed, observations, and response taken to reduce or prevent pollutants in storm water discharges. The SWPPP shall be revised, as necessary, and implemented in accordance with Attachment "J" Stormwater Pollution Prevention Plan Requirements of Order No. R8-2009-0014.

d. The Discharger with storm water containment facilities shall conduct monthly inspections of their containment areas to detect leaks and ensure maintenance of adequate freeboard. Records shall be maintained of the inspection dates, observations, and any response taken to eliminate leaks and to maintain adequate freeboard.

---

1 *"Scheduled facility operating hours" are the time periods when the facility is staffed to conduct any function related to industrial activity, but excluding time periods where only routine maintenance, emergency response, security, and/or janitorial services are performed.*

2 *Three (3) working days may be separated by non-working days such as weekends and holidays provided that no storm water discharges occur during the three (3) working days and the non-working days.*

5. *Sampling and Analysis*

a. The Discharger shall collect storm water samples during the first hour of discharge from (1) the first storm event of the wet season, and (2) at least one other storm event in the wet season. All storm water discharge locations shall be sampled. Sampling of stored or contained storm water shall occur at the time the stored or contained storm water is released. The Discharger that does not collect samples from the first storm event of the wet season are still required to collect samples from two other storm events of the wet season and shall explain in the "Annual Stormwater Report" (see Section 12, below) why the first storm event was not sampled.

b. Sample collection is only required of storm water discharges that occur during scheduled facility operating hours and that are preceded by at least (3) three working days without storm water discharge.

c. The samples shall be analyzed for:

1) Total suspended solids (TSS) pH, specific conductance, and total organic carbon (TOC). Oil and grease (O&G) may be substituted for TOC;

2) Toxic chemicals and other pollutants that are likely to be present in storm water discharges in significant quantities. If these pollutants are not detected in significant quantities after two consecutive sampling events, the Discharger may eliminate the pollutant from future sample analysis until the pollutant is likely to be present again;

3) The Discharger is not required to analyze a parameter when either of the two following conditions are met: (a) the parameter has not been detected in significant quantities from the last two consecutive sampling events, or (b) the parameter is not likely to be present in storm water discharges and authorized non-storm water discharges in significant quantities based upon the Discharger's evaluation of the facilities industrial activities, potential pollutant sources, and SWPPP; and

4) Other parameters as required by the Regional Water Board.

6. *Sample Storm Water Discharge Locations*

a. The Discharger shall visually observe and collect samples of storm water discharges from all drainage areas that represent the quality and quantity of the facility's storm water discharges from the storm event.

b. If the facility's storm water discharges are commingled with run-on from surrounding areas, the Discharger should identify other visual observation and sample collection locations that have not been commingled by run-on and that represent the quality and quantity of the facility's storm water discharges from the storm event.

c. If visual observation and sample collection locations are difficult to observe or sample (e.g., sheet flow, submerged outfalls), the Discharger shall identify and collect samples from other locations that represent the quality and quantity of the facility's storm water discharges from the storm event.

d. The Discharger that determines that the industrial activities and BMPs within two or more drainage areas are substantially identical may either (1) collect samples from a reduced number of substantially identical drainage areas, or (2) collect samples from each substantially identical drainage area and analyze a combined sample from each substantially identical drainage area. The Discharger must document such a determination in the annual Stormwater report.

7. *Visual Observation and Sample Collection Exceptions*

The Discharger is required to be prepared to collect samples and conduct visual observations at the beginning of the wet season (October 1) and throughout the wet season until the minimum requirements of Sections 4. and 5., above, are completed with the following exceptions:

a. The Discharger is not required to collect a sample and conduct visual observations in accordance with Section 4 and Section 5, above, due to dangerous weather conditions, such as flooding, electrical storm, etc., when storm water discharges begin after scheduled facility operating hours or when storm water discharges are not preceded by three working days without discharge. Visual observations are only required during daylight hours. The Discharger that does not collect the required samples or visual observations during a wet season due to these exceptions shall include an explanation in the "Annual Stormwater Report" why the sampling or visual observations could not be conducted.

b. The Discharger may conduct visual observations and sample collection more than one hour after discharge begins if the Discharger determines that the objectives of this section will be better satisfied. The Discharger shall include an explanation in the "Annual Stormwater Report" why the visual observations and sample collection should be conducted after the first hour of discharge.

8. *Alternative Monitoring Procedures*

The Discharger may propose an alternative monitoring program that meets Section 2, above, monitoring program objectives for approval by the Regional Water Board's Executive Officer. The Discharger shall continue to comply with the monitoring requirements of this section and may not implement an alternative monitoring plan until the alternative monitoring plan is approved by the Regional Water Board's Executive Officer. Alternative monitoring plans are subject to modification by the Regional Water Board's Executive Officer.

9. *Monitoring Methods*

a. The Discharger shall explain how the facility's monitoring program will satisfy the monitoring program objectives of Section 2., above. This shall include:

1) Rationale and description of the visual observation methods, location, and frequency;

2) Rationale and description of the sampling methods, location, and frequency; and

3) Identification of the analytical methods and corresponding method detection limits used to detect pollutants in storm water discharges. This shall include justification that the method detection limits are adequate to satisfy the objectives of the monitoring program.

b. All sampling and sample preservation shall be in accordance with the current edition of "Standard Methods for the Examination of Water and Wastewater" (American Public Health Association). All monitoring instruments and equipment (including the Discharger's own field instruments for measuring pH and Electro-conductivity) shall be calibrated and maintained in accordance with manufacturers' specifications to ensure accurate measurements. All laboratory analyses must be conducted according to test procedures under 40 CFR Part 136, unless other test procedures have been specified in Order No. R8-2009-0014 or by the Regional Water Board's Executive Officer. All metals shall be reported as total recoverable metals or unless otherwise specified in Order No. R8-2009-0014. With the exception of analysis conducted by the Discharger, all laboratory analyses shall be conducted at a laboratory certified for such analyses by the State Department of Health Services. The Discharger may conduct their own sample analyses if the Discharger has sufficient capability (qualified employees, laboratory equipment, etc.) to adequately perform the test procedures.

10. *Sampling and Analysis Exemptions and Reductions*

A Discharger who qualifies for sampling and analysis exemptions, as described below in Section 10.a.(1) or who qualifies for reduced sampling and analysis, as described below in Section 10.b., must submit the appropriate certifications and required documentation to the Regional Water Board prior to the wet season (October 1) and certify as part of the annual Stormwater report submittal. A Discharger that qualifies for either the Regional Water Board or local agency certification programs, as described below in Section 10.a.(2) and (3), shall submit certification and documentation in accordance with the requirements of those programs. The Discharger who provides certification(s) in accordance with this section are still required to comply with all other monitoring program and reporting requirements. The Discharger shall prepare and submit their certification(s) using forms and instructions provided by the State Water Board, Regional Water Board, or local agency or shall submit their information on a form that contains equivalent information. The Discharger whose facility no longer meets the certification conditions must notify the Regional Water Board's Executive Officer (and local agency) within 30 days and immediately comply with Section 5., Sampling and Analysis requirements. Should a Regional Water Board (or local agency)

determine that a certification does not meet the conditions set forth below, the Discharger must immediately comply with the Section 5., Sampling and Analysis requirements.

a. Sampling and Analysis Exemptions

A Discharger is not required to collect and analyze samples in accordance with Section 5., above, if the Discharger meets all of the conditions of one of the following certification programs:

1) No Exposure Certification (NEC)

This exemption is designed primarily for those facilities where all industrial activities are conducted inside buildings and where all materials stored and handled are not exposed to storm water. To qualify for this exemption, the Discharger must certify that their facilities meet all of the following conditions:

a) All prohibited non-storm water discharges have been eliminated or otherwise permitted.

b) All authorized non-storm water discharges have been identified and addressed in the SWPPP.

c) All areas of past exposure have been inspected and cleaned, as appropriate.

d) All significant materials related to industrial activity (including waste materials) are not exposed to storm water or authorized non-storm water discharges.

e) All industrial activities and industrial equipment are not exposed to storm water or authorized non-storm water discharges.

f) There is no exposure of storm water to significant materials associated with industrial activity through other direct or indirect pathways such as from industrial activities that generate dust and particulates.

g) There is periodic re-evaluation of the facility to ensure conditions (a), (b), (d), (e), and (f) above are continuously met. At a minimum, re-evaluation shall be conducted once a year.

2) Regional Water Board Certification Programs

The Regional Water Board may grant an exemption to the Section 5. Sampling and Analysis requirements if it determines a Discharger has met the conditions set forth in a Regional Water Board certification program. Regional Water Board certification programs may include conditions to (a) exempt the Discharger whose facilities infrequently discharge storm water to waters of the United States, and (b) exempt the Discharger that demonstrate compliance with the terms and conditions of Order No. R8-2009-0014.

3) Local Agency Certifications

A local agency may develop a local agency certification program. Such programs must be approved by the Regional Water Board. An approved local agency program may either grant an exemption from Section 5. Sampling and Analysis requirements or reduce the frequency of sampling if it determines that a Discharger has demonstrated compliance with the terms and conditions of the Industrial Activities Storm Water General Permit Order No. 97-03-DWQ which was adopted by the State Water Resources Control Board on April 17, 1997.

b. Sampling and Analysis Reduction

1) A Discharger may reduce the number of sampling events required to be sampled for the remaining term of Order No. R8-2009-0014 if the Discharger provides certification that the following conditions have been met:

a) The Discharger has collected and analyzed samples from a minimum of six storm events from all required drainage areas;

b) All prohibited non-storm water discharges have been eliminated or otherwise permitted;

c) The Discharger demonstrates compliance with the terms and conditions of the Order No. R8-2009-0014 for the previous two years (i.e., completed Annual Stormwater Reports, performed visual observations, implemented appropriate BMPs, etc.);

d) The Discharger demonstrates that the facility's storm water discharges and authorized non-storm water discharges do not contain significant quantities of pollutants; and

e) Conditions (b), (c), and (d) above are expected to remain in effect for a minimum of one year after filing the certification.

2) Unless otherwise instructed by the Regional Water Board, the Discharger shall collect and analyze samples from two additional storm events during the remaining term of Order No. R8-2009-0014 in accordance with Table A, below. The Discharger shall collect samples of the first storm event of the wet season. The Discharger that does not collect samples from the first storm event of the wet season shall collect samples from another storm event during the same wet season. The Discharger that does not collect a sample in a required wet season shall collect the sample from another storm event in the next wet season. The Discharger shall explain in the "Annual Stormwater Report" why the first storm event of a wet season was not sampled or a sample was not taken from any storm event in accordance with the Table A schedule, below.

Table A. REDUCED MONITORING SAMPLING SCHEDULE

Discharger Filing Sampling Reduction Certification By	Samples Shall be Collected and Analyzed in these wet seasons	
	Sample 1	Sample 2
Sept. 1, 2008	Oct. 1, 2008-May 31, 2009	Oct. 1, 2008-May 31, 2009
Sept. 1, 2009	Oct. 1, 2009-May 31, 2010	Oct. 1, 2009-May 31, 2010
Sept. 1, 2010	Oct. 1, 2010-May 31, 2011	Oct. 1, 2010-May 31, 2011
Sept. 1, 2011	Oct. 1, 2011-May 31, 2012	Oct. 1, 2011-May 31, 2012
Sept. 1, 2012	Oct. 1, 2012-May 31, 2013	Oct. 1, 2012-May 31, 2013
Sept. 1, 2013	Oct. 1, 2013-May 31, 2014	Oct. 1, 2013-May 31, 2014

11. *Records*

Records of all storm water monitoring information and copies of all reports (including the Annual Stormwater Reports) required by Order No. R8-2009-0014 shall be retained for a period of at least five years. These records shall include:

a. The date, place, and time of site inspections, sampling, visual observations, and/or measurements;

b. The individual(s) who performed the site inspections, sampling, visual observations, and or measurements;

c. Flow measurements or estimates;

d. The date and approximate time of analyses;

e. The individual(s) who performed the analyses;

f. Analytical results, method detection limits, and the analytical techniques or methods used;

g. Quality assurance/quality control records and results;

h. Non-storm water discharge inspections and visual observations and storm water discharge visual observation records (see Sections 3. and 4., above);

i. Visual observation and sample collection exception records (see Section 5.a, 6.d, 7, and 10.b.(2), above;

j. All calibration and maintenance records of on-site instruments used;

k. All Sampling and Analysis Exemption and Reduction certifications and supporting documentation (see Section 10);

l. The records of any corrective actions and follow-up activities that resulted from the visual observations.

12. Annual Report

The Discharger shall submit an Annual Stormwater Report by July 1 of each year to the Executive Officer of the Regional Water Board and to the local agency (if requested). The report shall include a summary of visual observations and sampling results, an evaluation of the visual observation and sampling and analysis results, laboratory reports, the Annual Comprehensive Site Compliance Evaluation Report required in Section 9. of Attachment "J" of Order No. R8-2009-0014, an explanation of why a facility did not implement any activities required by Order No. R8-2009-0014 (if not already included in the Evaluation Report), and records specified in Section 11., above. The method detection limit of each analytical parameter shall be included. Analytical results that are less than the method detection limit shall be reported as "less than the method detection limit". The Annual Stormwater Report shall be signed and certified in accordance with Attachment D. Federal Standard Provisions, Section V-Reporting, Subsection B. Signatory and Certification requirements of Order No. R8-2009-0014. The Discharger shall prepare and submit their Annual Stormwater Reports using the annual report forms provided by the State Water Board or Regional Water Board or shall submit their information on a form that contains equivalent information.

13. Watershed Monitoring Option

Regional Water Boards may approve proposals to substitute watershed monitoring for some or all of the requirements of this section if the Regional Water Board finds that the watershed monitoring will provide substantially similar monitoring information in evaluating Discharger compliance with the requirements of Order No. R8-2009-0014.