California Regional Water Quality Control Board
Santa Ana Region

February 10, 2012

ITEM: 8

SUBJECT: Renewal of Waste Discharge Requirements for Poseidon Resources (Surfside) L.L.C., Huntington Beach Desalination Facility, Order No. R8-2012-0007, NPDES No. CA8000403, Orange County

DISCUSSION:

On December 9, 2011, the Regional Board conducted a public hearing to receive testimony on tentative Order No. R8-2011-0046, NPDES No. CA8000403, Waste Discharge Requirements for Poseidon Resources (Surfside) L.L.C., Huntington Beach Desalination Facility. The tentative Order was circulated to interested parties prior to the hearing to solicit comments. Numerous comments were received prior to and during the hearing. However, many of the written comments were received only days prior to the hearing. Due to the lateness of the comments, Board staff did not have sufficient time to prepare formal written responses prior to the hearing for the Regional Board to consider.

The Regional Board closed the public hearing on this item on December 9, 2011. However, because of the volume of comments received and the fact that Board staff did not have sufficient time to prepare formal written responses prior to the hearing, the Board delayed adoption of the tentative Order until its February 10, 2012, meeting. No additional comments were to be accepted.

During the hearing on December 9, Board staff proposed several modifications to the tentative Order in response to the comments that had been submitted. Those modifications were presented in the form of an Errata Sheet. Those modifications have now been incorporated into the subject tentative Order. The Order number has also been changed from *R8-2011-0046* to *R8-2012-0007*, as the tentative Order is now being considered for adoption in 2012.

All written comments that were submitted regarding this item can be found at, *http://www.waterboards.ca.gov/santaana/board_info/agendas/2011/12_09/12-09-11_item_10.pdf*. Staff's formal written responses to the comments received prior to and during the hearing are included in this agenda item, following the tentative order.

RECOMMENDATIONS:

Adopt Order No. R8-2012-0007, NPDES No. CA8000403 as presented.

California Regional Water Quality Control Board
Santa Ana Region

3737 Main Street, Suite 500, Riverside, California 92501-3348
Phone (951) 782-4130 • FAX (951) 781-6288 • TDD (951) 782-3221
www.waterboards.ca.gov/santaana

Tentative

ORDER NO. R8-2012-0007
NPDES NO. CA8000403

WASTE DISCHARGE REQUIREMENTS
FOR
POSEIDON RESOURCES (SURFSIDE) L.L.C.
HUNTINGTON BEACH DESALINATION FACILITY
ORANGE COUNTY

The following Discharger is subject to waste discharge requirements as set forth in this Order:

Table 1. Discharger Information

Discharger/Operator	**Poseidon Resources (Surfside) L.L.C.**
Name of Facility	**Huntington Beach Desalination Facility**
Facility Address	**21730 Newland Street**
	Huntington Beach, CA 92646
	Orange County
This discharge is classified as a **minor** discharge.	

The discharge by the Poseidon Resources (Surfside) L.L.C. from the discharge points identified below is subject to waste discharge requirements as set forth in this Order:

Table 2. Discharge Location

Discharge Point	Effluent Description	Discharge Point Latitude	Discharge Point Longitude	Receiving Water
001	RO effluent, filter backwash, RO subsequent rinse wastewater, stormwater runoff	33° 38' 38"	117° 58' 44"	Discharge to AES – HBGS[1] discharge pipeline to the Pacific Ocean

Table 3. Administrative Information

This Order was adopted by the Regional Water Quality Control Board on:	**February 10, 2012**
This Order shall become effective on:	**February 10, 2012**
This Order shall expire on:	**February 1, 2017**
The Discharger shall file a Report of Waste Discharge in accordance with title 23, California Code of Regulations, as application for issuance of new waste discharge requirements no later than:	**August 6, 2016**

[1] *AES (HBGS) – Aera Energy Services L.L.C. – Huntington Beach Generating Station*

IT IS HEREBY ORDERED, that this Order supersedes and rescinds Order No. R8-2006-0034 except for enforcement purposes, and, in order to meet the provisions contained in Division 7 of the California Water Code (commencing with section 13000) and regulations adopted thereunder, and the provisions of the Federal Clean Water Act and regulations and guidelines adopted thereunder, the Discharger shall comply with the requirements in this Order.

I, Kurt V. Berchtold, Executive Officer, do hereby certify that this Order No. R8-2012-0007 with all the attachments is a full, true, and correct copy of an Order adopted by the California Regional Water Quality Control Board, Santa Ana Region, on February 10, 2012.

_____

Kurt V. Berchtold, Executive Officer

TABLE OF CONTENTS

I. Facility Information 5
II. Findings 5
III. Discharge Prohibitions 16
IV. Effluent Limitations and Discharge Specifications 16
  A. Effluent Limitations – Discharges to DP 001 16
  B. Land Discharge Specifications - N/A 20
  C. Reclamation Specifications - N/A 21
  D. Storm Water Discharge Specifications 21
V. Receiving Water Limitations 21
  A. Surface Water Limitations 21
  B. Groundwater limitations - N/A 24
VI. Provisions 24
  A. Standard Provisions 24
  B. Monitoring and Reporting Program Requirements 27
  C. Special Provisions 27
    1. Reopener Provisions 27
    2. Special Studies, Technical Reports and Additional Monitoring Requirements - N/A 28
    3. Best Management Practices and Pollution Prevention 28
    4. Construction, Operation and Maintenance Specifications 29
    5. Other Special Provisions - N/A 30
    6. Compliance Schedules - N/A 30
VII. Compliance Determination 30

LIST OF TABLES

Table 1. Discharger Information 1
Table 2. Discharge Location 1
Table 3. Administrative Information 1
Table 4. Facility Information 5
Table 5. Basin Plan Beneficial Uses 12
Table 6. Ocean Plan Beneficial Uses 13
Table 7. Effluent Limits for DP 001 at M-001 17

LIST OF ATTACHMENTS

Attachment A – Definitions A-1
Attachment B – Facility Location Map B-1
Attachment C – Flow Schematic C-1
Attachment D – Federal Standard Provisions D-1
Attachment E – Monitoring and Reporting Program (MRP) E-1
Attachment F – Fact Sheet F-1
Attachment G – Minimum Levels G-1
Attachment H – Not Used
Attachment I – Not used
Attachment J – Stormwater Pollution Prevention Plan Requirements J-1
Attachment K – Stormwater Monitoring Program and Reporting Requirements K-1

I. FACILITY INFORMATION

The following Discharger is subject to waste discharge requirements as set forth in this Order:

Table 4. Facility Information

Discharger/Operator	Poseidon Resources (Surfside) L.L.C.
Name of Facility	Huntington Beach Desalination Facility
Facility Address	21730 Newland Street
	Huntington Beach, CA 92646
	Orange County
Facility Contact, Title, and Phone	Josie McKinley, Director Project Development, (714) 596-7946
Mailing Address	501 W. Broadway, Suite 2020, San Diego, CA 92101
Type of Facility	Industrial
Facility Design Flow	56.59 MGD, 12-Month Average Flow 60.3 MGD Maximum Daily Flow

II. FINDINGS

The California Regional Water Quality Control Board, Santa Ana Region (hereinafter Regional Water Board), finds:

A. Background. Poseidon Resources (Surfside) L.L.C. (hereinafter Discharger) proposes to construct and operate the Huntington Beach Desalination Facility (hereinafter Facility) on a 12-acre parcel adjacent to the AES Huntington Beach Generating Station (HBGS). The Discharger has entered into a 55-year option agreement with AES, the owner and operator of the HBGS, for the desalination project site. The Discharger proposes to discharge a maximum of 60.3 million gallons per day (MGD) of wastewater (54 MGD of concentrated seawater and 6.3 MGD of filter backwash) to the Pacific Ocean.

On August 25, 2006, the Regional Water Board issued Order No. R8-2006-0034, NPDES No. CA80000403, which prescribed waste discharge requirements for discharges from the Facility. Order No. R8-2006-0034 expired on August 1, 2011. On February 2, 2010, the Discharger submitted a timely application for renewal of this permit. Therefore, pursuant to 40 CFR 122.6, Order No. R8-2006-0034, NPDES No. CA80000403, shall remain in effect until the effective date of the new permit.

Effluent limitations and mass emission limits established in this Order are at least as stringent as those established in Order No. R8-2006-0034. The permit is being modified to:

1. Allow the Discharger to utilize the HBGS intake pumps in a temporary stand-alone mode when HBGS's operations do not provide sufficient flows (i.e., approximately 126.7 MGD);

2. Establish maximum daily discharge flow limits for the Facility to allow for the temporary maximum operation of all proposed reverse osmosis units (see Attachment F, Fact Sheet, Table F-2); and

3. Establish maximum daily discharge flow limits for the Facility to account for initial start-up operations and temporary on-site maintenance operations (approximately 126.7 MGD).

For the purposes of this Order, references to the "discharger" or "permittee" in applicable federal and State laws, regulations, plans, or policy are held to be equivalent to references to the Discharger herein.

B. Facility Description. The Discharger proposes to produce potable water for delivery into water distribution systems within Orange County. The Discharger will receive its source water from either the HBGS's condenser cooling water discharge or directly from the HBGS's intake system. The desalination process will consist of source water screening, coagulation, filtration, pH adjustment, chlorination, de-chlorination, reverse osmosis (RO) membrane separation, and product water chlorination and chemical conditioning. The RO system will use high-rejection seawater membranes. The Facility will produce a 12-month average of 50 MGD of potable water and 50 MGD of concentrated seawater. Approximately 6.3 MGD of filter backwash will be produced and will be mixed with the concentrated seawater. RO cleaning solutions and first-rinse wastewater will be directed to a neutralization tank and then discharged to the local sewer. All subsequent rinse wastewater (up to 0.29 MGD) will be conveyed to a 200,000-gallon washwater equalization tank prior to being metered into the Facility's effluent outfall. The Discharger will utilize chlorine in the form of sodium hypochlorite to control and prevent microbial growth in the transmission pipelines and filter media. Chlorine may be injected before the influent to the filtration system. All chlorinated process water will be de-chlorinated if returned to discharge to the ocean. Chlorine will also be used to disinfect product water to meet California Department of Public Health water quality standards. The concentrated seawater with other process wastewater (on average 56.59 MGD) described above will be discharged to the ocean through the existing HBGS outfall structure. Attachment B provides a map of the Facility and surrounding area. Attachment C provides a flow schematic of the Facility.

HBGS facilities periodically engage in heat treatment as an antifouling measure. This heat treatment may occur every six to eight weeks, and may last approximately six to eight hours per occurrence. The Facility's treatment system will not operate when the HBGS is engaged in heat treatment. To make up for the periods of inactivity that are attributable to HBGS heat treatment or temporary onsite Facility maintenance, the

Facility may be operated at its maximum daily peak production capacity. The Facility's production capacity would increase the Facility's discharges during these periods, resulting in a maximum daily concentrated seawater discharge flow of 54 MGD, and a maximum daily total Facility discharge flow of 60.3 MGD (See Appendix F, Table F-2).

During initial start-up operations and temporary onsite maintenance operations, it may be necessary to temporarily return all or a portion of the filtered pretreated seawater (up to approximately 126.7 MGD) back into the HBGS discharge pipeline instead of routing the filtered seawater flow to the reverse osmosis units. Additionally, during such start-up periods or periods when it is not feasible to deliver product water to the potable water system, it may be necessary to temporarily discharge dechlorinated product water from the reverse osmosis process back into the HBGS discharge pipeline. During these temporary periods, the maximum allowable flows returned to the ocean would not exceed 126.7 MGD and the volume and salinity of the additional discharges would be identical to the volume and salinity of the intake water.

Order No. R8-2006-0011, NPDES No. CA0001163, adopted by the Regional Water Board on August 25, 2006, authorizes AES Huntington Beach (operator of the HBGS) to discharge of up 514 MGD of single-pass seawater from the HBGS. Requirements established in the Order No. R8-2006-0034 for the Discharger are based on the Facility's use of intake water from the HBGS cooling water system. Between 2006 and 2010, the HBGS's annual average seawater intake flow through the power plant ranged from 200 MGD to 268 MGD. The power plant's maximum daily intake flow reached 507 MGD in each year. On April 1, 2011, AES Huntington Beach submitted to the State Water Resources Control Board (hereinafter State Water Board) a plan for compliance with the State Water Board's "Water Quality Control Policy for the Use of Coastal and Estuarine Waters for Power Plant Cooling." Based on these policy requirements and AES's implementation plan, the HBGS cooling water system is anticipated to be in operation until at least December 31, 2020.

It is anticipated that the Facility will operate in conjunction with the HBGS (a co-located operational scenario) by using HBGS cooling water discharge as its source water. When operating in this co-location mode, the Facility's feed water intake requirements will not increase the volume or the velocity of HBGS's cooling water intake.

If HBGS were to temporarily cease operations of its once-through cooling water system (e.g., during HBGS maintenance shutdowns), or if it were to provide insufficient flows to satisfy the Facility's intake flow requirements, the Discharger would operate the HBGS's seawater intake and outfall independently in a temporary stand-alone operational mode. This temporary stand-alone mode might occur in one of two situations: (1) when HBGS is temporarily shut down; or (2) when HBGS is operating but its discharge volumes are not sufficient to meet the Facility's intake requirements. When operating in temporary stand-alone mode, the Facility's intake flows will be maintained at approximately 126.7 MGD.

If HBGS were to permanently terminate the use and operation of its once-through cooling water system and/or were to permanently stop generating electricity, the Facility would operate the seawater intake and outfall independently in a long-term stand-alone operational mode. When operating in long-term stand-alone mode, the Facility's intake flows will be maintained at approximately 126.7 MGD.

This Order establishes effluent limitations and discharge prohibitions and provisions for the co-located operational scenario and the temporary stand-alone operational scenario. The Discharger will be required to submit a separate Report of Waste Discharge to address long-term stand-alone operations in the event that HBGS permanently ceases use of the once-through cooling water system or permanently ceases electricity generating operations at the current site.

To ensure protection of receiving water beneficial uses and to limit salinity concentrations in receiving waters, Order No. R8-2006-0034 limited the Facility's total outfall discharge under the co-located operations to a maximum of 44.7 percent of the intake flow (total desalination discharge 56.59 MGD/total HBGS discharge of 126.7 MGD). Under this requirement, the Facility could achieve its production capacity whenever HBGS flows meet or exceed 126.7 MGD. If the HBGS does not direct 126.7 MGD to the Facility, the Facility will operate the intake system in a temporary stand-alone mode to maintain a minimum intake flow of approximately 126.7 MGD, thereby ensuring that the Facility's discharge remains at or less than 44.7 percent of the total intake volume.

C. Intake Regulations. Federal Clean Water Act (CWA) Section 316(b) implementing regulations are applicable to facilities that meet the definition of a Phase II existing facility at 40 CFR 125.91. Such facilities that withdraw cooling water from a waters of the United States; have, or are required to have, a NPDES permit; generate and transmit electric power as their primary business activity; have a total design intake capacity of 50 MGD or greater; and use at least 25 percent of the withdrawn water exclusively for cooling purposes. Pursuant to CWA 316(b) regulations, the HBGS is classified as a Phase II existing facility. However, pursuant to the definitions and applicability of the Phase I rule (40 CFR 125.8), the Phase II rule (40 CFR 125.9), and the proposed Phase III rule (Federal Register Vol. 69, No. 226, Wednesday, Nov. 24, 2004), the 316(b) regulations are not applicable to the Huntington Beach Desalination Facility. Therefore, no special conditions relating to the 316(b) implementing regulations are included in this Order.

When operating in conjunction with the power plant (co-located scenario), the Facility will not increase the volume or the velocity of HBGS's cooling water intake, nor will it increase the number of organisms impinged and/or entrained by the HBGS's cooling water intake structure. Therefore, when the Facility is operating in co-located mode, there will be no additional impacts on marine life.

The Facility's stand-alone operations are regulated under California Water Code (CWC) Section 13142.5(b), which requires new industrial facilities using seawater for processing to use the best available site, design, technology and mitigation feasible to minimize intake and mortality of marine life.

When operating in a temporary stand-alone mode, the Facility's intake flow will be approximately 126.7 MGD – a volume which is less than HBGS's currently permitted intake flow of 514 MGD. Such operations will lead to reductions in the intake volumes, flow velocities, temperature and impingement and entrainment effects which occur under the HGBS's current operations with significantly higher intake volumes (between 2006 and 2010 the HBGS' annual average intake ranged from 200 MGD to 268 MGD with a maximum daily flow of 507 MGD). In addition, HBGS has provided for marine life mitigation for more than an average annual flow of 126.7 MGD, and is mandated by the State Water Board to provide for such mitigation until it permanently ceases to use the once-through cooling water system or permanently stops generating electricity. As a result, the marine life effects of the Facility's temporary stand-alone operation should not require additional impingement and entrainment mitigation. To ensure that any entrainment and/or impingement effects have been minimized in accordance with California Water Code Section 13142.5(b), the Facility will cap its temporary, stand-alone flows to a 12-month running average that shall not exceed the available mitigation credits, or the Discharger otherwise shall provide sufficient mitigation, as determined by the Executive Officer.

When the Facility is operating in temporary stand-alone mode it is utilizing the best available site, design, technology, and mitigation measures feasible to minimize the intake and mortality of all forms of marine life and is in compliance with CWC Section 13142.5(b).

If the HBGS permanently ceases operations of the once-through cooling water system and/or if the HBGS permanently stops generating electricity at the current site, within 180 days of receiving such notice, the Discharger shall submit a separate Report of Waste Discharge to the Regional Water Board which evaluates any new design and technology requirements to conform with CWC Section 13142.5(b). Additional review will be necessary, in part, because when operating in long-term stand-alone mode, the Discharger will have more discretion and flexibility with respect to the operation of the intake and outfall structure and it will be in a position to re-consider whether other design and/or technology features have been rendered feasible.

The Regional Board has found that the 66.8 acre wetlands mitigation program that AES Huntington Beach is currently funding provides sufficient mitigation to address any impacts caused by the intake of an average flow of 126.7 MGD of seawater. If AES were to discontinue support for the marine life mitigation program, continuation of these mitigation efforts by the Discharger may be considered the best mitigation measures to

feasibly address any impacts caused by its continued use of the intake structures pursuant to Water Code Section 13142.5(b).

Details regarding compliance with CWC Section 13142.5(b) are provided in the Fact Sheet, Attachment F to this Order.

D. Legal Authorities. This Order is issued pursuant to Section 402 of the Federal Clean Water Act (CWA) and implementing regulations adopted by the U.S. Environmental Protection Agency (USEPA) and Chapter 5.5, Division 7 of the California Water Code (Section 13370 *et seq.*). It shall serve as a NPDES permit for point source discharges from this facility to surface waters. This Order also serves as Waste Discharge Requirements (WDRs) pursuant to Article 4, Chapter 4 of the CWC (Section 13260 *et seq.*).

E. Background and Rationale for Requirements. The Regional Water Board developed the requirements in this Order based on information submitted as part of the application, through monitoring and reporting programs, and other available environmental information. The Fact Sheet (Attachment F), which contains background information and rationale for Order requirements, is hereby incorporated into this Order and constitutes part of the Findings for this Order. Attachments A through K are also incorporated into this Order.

F. California Environmental Quality Act (CEQA). Under California Water Code Section 13389, this action to adopt an NPDES permit is exempt from the provisions of the CEQA, Public Resources Code sections 21100-21177.

In compliance with the California Environmental Quality Act, a Subsequent Environmental Impact Report (SEIR) for the Facility was certified by the City of Huntington Beach on September 7, 2010, and the City adopted a CEQA Statement of Findings of Facts with a Statement of Overriding Considerations and Mitigation Monitoring and Reporting Program. Also on September 7, 2010, the City of Huntington Beach amended Conditional Use Permit No. 02-04 and on September 20, 2010, the City of Huntington Beach approved Coastal Development Permit No. 10-014 for the Facility.

As documented in the Fact Sheet (Attachment F), the Regional Water Board has reviewed the final SEIR. The final SEIR identifies no significant impacts with mitigation measures for hazards and hazardous materials or for stormwater drainage. No significant impacts were identified and no mitigation was required for any marine life- or water quality-related effects.

The Facility as currently permitted under Order No. R8-2006-0034 may operate in the absence of the power plant generating electricity but must adhere to a 44.7% minimum dilution ratio to ensure compliance with Ocean Plan receiving water quality standards.

Operating the Facility at a feed water flow rate of 152 MGD, as analyzed in the final SEIR, would provide for more dilution of the Facility's discharge than is required under the Facility's existing Order and under state and federal water quality regulations, and it could potentially cause incremental entrainment and impingement effects that can be avoided by operating the Facility at a 12-month average of 126.7 MGD.

To prevent salinity-related impacts and to ensure compliance with the Ocean Plan, this Order establishes requirements that the Facility discharges remain at or less than 44.7 percent of the total intake flow. This order also maintains the existing initial dilution factor of 7.5:1 and 1,000 foot Zone of Initial Dilution assigned to HBGS. To conform to this requirement while minimizing the potential for impingement and entrainment effects, the average annual intake flow for the Facility under temporary stand-alone operations is limited to 126.7 MGD (see Table F-2). Compliance with this average annual intake flow will ensure that the Facility's discharge is consistent with the Ocean Plan.

G. Technology-based Effluent Limitations. Section 301(b) of the CWA and implementing USEPA permit regulations at 40 CFR 122.44 require that permits include conditions meeting applicable technology-based requirements at a minimum, and any more stringent effluent limitations necessary to meet applicable water quality standards. The discharge authorized by this Order must meet minimum federal technology-based effluent limitations (TBELs) based on Table A of the California Ocean Plan and/or Best Professional Judgment (BPJ) in accordance with 40 CFR 125.3.

A detailed discussion of the technology-based effluent limitations in this Order is included in the Fact Sheet (Attachment F).

H. Water Quality-based Effluent Limitations. Section 301(b) of the CWA and 40 CFR 122.44(d) require that permits include limitations more stringent than applicable federal technology-based requirements where necessary to achieve applicable water quality standards.

40 CFR 122.44(d)(1)(i) mandates that permits include effluent limitations for all pollutants that are or may be discharged at levels that have the reasonable potential to cause or contribute to an exceedance of a water quality standard, including numeric and narrative objectives within a standard. Where numeric water quality objectives have not been established for a pollutant, water quality-based effluent limitations (WQBELs) must be established using: (1) USEPA criteria guidance under CWA Section 304(a), supplemented where necessary by other relevant information; (2) an indicator parameter for the pollutant of concern; or (3) a calculated numeric water quality criterion, such as a proposed State criterion or policy interpreting the State's narrative criterion, supplemented with other relevant information, as provided in 40 CFR 122.44(d)(1)(vi). This Order includes water quality-based effluent limitations (See Attachment F).

I. **Water Quality Control Plans.** The Regional Water Board adopted a Water Quality Control Plan for the Santa Ana Region (hereinafter Basin Plan) that became effective on January 24, 1995. The Basin Plan designates beneficial uses, establishes water quality objectives, and contains implementation programs and policies to achieve those objectives for the Pacific Ocean. In addition, State Water Board Resolution No. 88-63 requires that, with certain exceptions, the Regional Water Board assign the municipal and domestic supply use to water bodies that do not have beneficial uses listed in the Basin Plan. Beneficial uses applicable to the Pacific Ocean are as follows:

Table 5. Basin Plan Beneficial Uses

Discharge Point	Receiving Water Name	Beneficial Use(s)
001[2]	Pacific Ocean Nearshore[3] Zone from the San Gabriel River to Poppy Street in Corona del Mar	Present or Potential Beneficial Use a. Industrial service supply, b. Navigation, c. Water contact recreation, d. Non-contact water recreation, e. Commercial and sportfishing, f. Wildlife habitat, g. Rare, threatened or endangered spieces, h. Spawning, reproduction, and development, i. Marine habitat, and j. Shellfish harvesting. Excepted from Municipal and Domestic supply
001[2]	Pacific Ocean Offshore Zone between the Nearshore Zone and the Limit of the State Waters	Present or Potential Beneficial Use a. Industrial service supply, b. Navigation, c. Water contact recreation, d. Non-contact water recreation, e. Commercial and sportfishing, f. Wildlife habitat, g. Rare, threatened or endangered species, h. Spawning, reproduction, and development, and i. Marine habitat. Excepted from Municipal and Domestic supply

The State Water Board adopted the *Water Quality Control Plan for Control of Temperature in the Coastal and Interstate Water and Enclosed Bays and Estuaries of California* (Thermal Plan) on May 18, 1972, and amended this plan on September 18, 1975. This plan contains temperature objectives for coastal waters. Requirements of this Order implement the Thermal Plan.

---

[2] *This discharge is to AES-HBGS discharge pipeline to the Pacific Ocean.*

[3] *The Nearshore Zone is defined by the Ocean Plan, Chapter II, B.1.a., as "within a zone bounded by the shoreline and a distance of 1,000 feet from the shoreline or the 30 foot depth contour, whichever is further from the shoreline."*

J. California Ocean Plan. The State Water Board adopted the Water Quality Control Plan for Ocean Waters of California, California Ocean Plan (Ocean Plan) in 1972 and amended it in 1978, 1983, 1988, 1990, 1997, 2000, and 2005. The State Water Board adopted the latest amendment to the Ocean Plan on April 21, 2005 and it became effective on February 14, 2006. The Ocean Plan is applicable, in its entirety, to point source discharges to the ocean. The Ocean Plan identifies beneficial uses of ocean waters of the State to be protected as summarized below:

Table 6. Ocean Plan Beneficial Uses

Discharge Point	Receiving Water	Beneficial Uses
001	Pacific Ocean	Industrial water supply; water contact and non-contact recreation, including aesthetic enjoyment; navigation; commercial and sport fishing; mariculture; preservation and enhancement of designated Areas of Special Biological Significance (ASBS); rare and endangered species; marine habitat; fish migration, fish spawning and shellfish harvesting

In order to protect the beneficial uses, the Ocean Plan establishes water quality objectives and a program of implementation. Requirements of this Order implement the Ocean Plan.

K. Initial Dilution Factor. In March 1980, the State Water Board investigated the initial dilution factor for power plant ocean outfalls throughout the State. The State Water Board assigned an “initial dilution” factor of 7.5:1 to AES HBGS outfall. It is appropriate to apply this dilution factor in establishing effluent limitations for discharges from this facility.

L. Alaska Rule. On March 30, 2000, USEPA revised its regulation that specifies when new and revised state and tribal water quality standards (WQS) become effective for CWA purposes (40 CFR 131.21; 65 Fed. Reg. 24641; (April 27, 2000).) Under the revised regulation (also known as the Alaska rule), new and revised standards submitted to USEPA after May 30, 2000 must be approved by USEPA before being used for CWA purposes. The final rule also provides that standards already in effect and submitted to USEPA by May 30, 2000, may be used for CWA purposes, whether or not approved by USEPA.

M. Stringency of Requirements for Individual Pollutants. This Order contains both technology-based and water quality-based effluent limitations for individual pollutants. The technology-based effluent limitations consist of restrictions on oil and grease**.** Restrictions on these pollutants are discussed in section IV. B. 2. of the Fact Sheet (Attachment F). The technology-based pollutant restrictions in this Order implement the minimum, applicable federal technology-based requirements. In addition, this Order contains effluent limitations more stringent than the minimum, federal technology-based requirements that are necessary to meet water quality standards.

Water quality-based effluent limitations have been scientifically derived to implement water quality objectives that protect beneficial uses. Both the beneficial uses and the water quality objectives have been approved pursuant to federal law and are the applicable federal water quality standards. All beneficial uses and water quality objectives contained in the Basin Plan and the Ocean Plan were approved under state law and submitted to and approved by USEPA prior to May 30, 2000. Any water quality objectives and beneficial uses submitted to USEPA prior to May 30, 2000, but not approved by USEPA before that date, are nonetheless "applicable water quality standards for purposes of the CWA" pursuant to 40 CFR 131.21(c)(1).

N. Anti-Backsliding Requirements. Sections 402(o)(2) and 303(d)(4) of the CWA and federal regulations at 40 CFR Section 122.44(l) prohibit backsliding in NPDES permits. These anti-backsliding provisions require effluent limitations in a reissued permit to be as stringent as those in the previous permit, with some exceptions where limitations may be relaxed. All effluent limitations in this Order are at least as stringent as the effluent limitations in the previous Order.

O. Antidegradation Policy. 40 CFR 131.12 requires that State water quality standards include an antidegradation policy consistent with the federal policy. The State Water Board established California's antidegradation policy in State Water Board Resolution 68-16. Resolution No. 68-16 incorporates the federal antidegradation policy where the federal policy applies under federal law. Resolution 68-16 requires that existing quality of waters be maintained unless degradation is justified based on specific findings. The Regional Water Board's Basin Plan implements, and incorporates by reference, both the State and federal antidegradation policies. As discussed in detail in the Fact Sheet (Attachment F), the permitted discharge is consistent with the antidegradation provisions of 40 CFR Section 131.12 and State Water Board Resolution 68-16.

P. Stormwater. On April 17, 1997, the State Board adopted the General Industrial Storm Water Permit, Order No. 97-03-DWQ, NPDES No. CAS000001. This General Permit implements the Final Regulations (40 CFR 122, 123, and 124) for storm water runoff that were published on November 16, 1990 by USEPA in compliance with Section 402(p) of the Clean Water Act (CWA). This Order incorporates certain provisions of the General Industrial Storm Water permit that are pertinent to this discharge. The Regional Water Board has determined that pollution prevention is necessary to achieve water quality objectives. Consequently, this Order requires the Discharger to establish, update as necessary, and implement a pollution prevention plan and stormwater monitoring. This Order also requires the discharger to incorporate relevant provisions of a new General Industrial Storm Water Permit that will likely be adopted in early 2012.
The new State Water Board Permit will contain minimum BMPs and requires monitoring for indicator parameters. This General Permit will also include Numeric Action Levels (NALs) for these parameters. The NALs are derived from USEPA's Multi-Sector General Permit (MSGP). This new General Permit will also contain requirements that

dischargers develop and implement storm water pollution prevention plans (SWPPP) that include BMPs that will achieve BAT and BCT to comply with water quality standards. Dischargers will also be required to eliminate unauthorized non-storm water discharges and to conduct monitoring, including visual and analytical storm water monitoring. This new General Permit will also require dischargers to electronically file all permit-related compliance documents in the online database smarts.waterboards.ca.gov. These documents include, but are not limited to, Notices of Intent (NOIs), SWPPPs, annual reports, Notices of Termination (NOTs), and NAL exceedance reports.

P. Endangered Species Act. This Order does not authorize any act that results in the taking of a threatened or endangered species or any act that is now prohibited, or becomes prohibited in the future, under either the California Endangered Species Act (Fish and Game Code sections 2050 to 2097) or the Federal Endangered Species Act (16 U.S.C.A. sections 1531 to 1544). This Order requires compliance with effluent limits, receiving water limits, and other requirements to protect the beneficial uses of waters of the state. The discharger is responsible for meeting all requirements of the applicable Endangered Species Act.

Q. Intake and Outfall Vicinity. In the vicinity of the HBGS's intake and outfall, no Areas of Special Biological Significance (ASBS), Marine Life Protection Areas (MLPA), state or federal threatened or endangered species or sensitive habitat (i.e. kelp beds) are expected to be affected by the Facility's seawater intake.

R. Monitoring and Reporting. 40 CFR 122.48 requires that all NPDES permits specify requirements for recording and reporting monitoring results. Sections 13267 and 13383 of the CWC authorize the Regional Water Board to require technical and monitoring reports. The Monitoring and Reporting Program establishes monitoring and reporting requirements to implement federal and State requirements. This Monitoring and Reporting Program is provided in Attachment E.

S. Standard and Special Provisions. Standard Provisions, which in accordance with 40 CFR Sections 122.41and 122.42, apply to all NPDES discharges and must be included in every NPDES permit, are provided in Attachment D. The Regional Water Board has also included in this Order special provisions applicable to the Discharger. A rationale for the special provisions contained in this Order is provided in the attached Fact Sheet (Attachment F).

T. Notification of Interested Parties. The Regional Water Board has notified the Discharger and interested agencies and persons of its intent to prescribe Waste Discharge Requirements for the discharge and has provided them with an opportunity to submit their written comments and recommendations. Details of notification are provided in the Fact Sheet (Attachment F) of this Order.

U. Consideration of Public Comment. The Regional Water Board, in a public meeting, heard and considered all comments pertaining to the discharge. Details of the Public Hearing are provided in the Fact Sheet (Attachment F) of this Order.

III. DISCHARGE PROHIBITIONS

A. Discharge of wastewaters from any point other than Discharge Point 001 is prohibited.

B. The discharge of waste other than concentrated seawater, filter backwash, RO cleaning solutions subsequent rinse wastewater, and stormwater runoff from the Facility, except during startup and maintenance operations, is prohibited

C. Except during initial start-up operations and temporary onsite maintenance operations, the discharge of concentrated seawater, filter backwash water, and RO cleaning solutions subsequent rinse wastewater from the Facility to the HBGS discharge pipeline in excess of a 12-Month Average Flow of 56.59 MGD or a maximum daily flow of 60.3 MGD is prohibited. Total Facility discharge flows to the HBGS discharge pipeline, including temporary discharges of filtered pretreated water or discharges of unused dechlorinated product water in excess of a 12-Month Average Flow of 126.7 MGD, is prohibited.

D. The discharge of waste sludge or other solids generated as the result of Facility operations directly to the ocean, or into a waste stream that discharges to the ocean, is prohibited.

E. The discharge of any substances in concentrations toxic to animal or plant life in the affected receiving water is prohibited.

F. The discharge of any radiological, chemical, or biological warfare agent or high level radiological waste is prohibited.

IV. EFFLUENT LIMITATIONS AND DISCHARGE SPECIFICATIONS

A. Effluent Limitations – Discharges to DP 001

1. The Discharger shall maintain compliance with the following effluent limitations at Discharge Point 001, with compliance measured at Monitoring Location, M-001, before discharges being mixed with AES discharges as described in the attached Monitoring and Reporting Program (MRP-Attachment E).

   The effluent limits are calculated by using a Dilution Factor of 7.5 and a wastewater flow of 56.59 MGD.

Table 7. Effluent Limits for DP 001 at M-001

Parameter	Units	Effluent Limitations				
		Average Monthly	Average Weekly	Instantaneous Maximum	Daily Maximum	6-Month Median
Oil and grease	mg/L	25	40	75	--	--
	lbs/day	11,800	18,900	--	--	--
Total suspended solids	mg/L	60[a]	--	--	--	--
	lbs/day	28,300	--	--	--	--
Settleable solids	ml/L	1.0	1.5	3.0	--	--
Turbidity	NTU	75	100	225	--	--
Arsenic	µg/L	--	--	660	250	46
	lbs/day	--	--		118	21
Cadmium	µg/L	--	--	85	34	8.5
	lbs/day	--	--		16	4.0
Chromium (Hexavalent)	µg/L	--	--	170	68	17
	lbs/day	--	--		32	8.0
Copper	µg/L	--	--	240	87	11
	lbs/day	--	--		41	5.0
Lead	µg/L	--	--	170	68	17
	lbs/day	--	--		32	8.0
Mercury	µg/L	--	--	3.4	1.36	0.34
	lbs/day	--	--		0.64	0.16
Nickel	µg/L	--	--	420	170	43
	lbs/day	--	--		80	20
Silver	µg/L	--	--	58	23	4.8
	lbs/day	--	--		11	2.2
Zinc	µg/L	--	--	1600	620	110
	lbs/day	--	--		290	52
Cyanide	µg/L	--	--	85	34	8.5
	lbs/day	--	--		16	4.0
Total Chlorine Residual	µg/L	--	--	510	68	17
	lbs/day	--	--		32	8.0
Chronic Toxicity[b]	TUc	--	--	----	8.5	----
Ammonia-Nitrogen	µg/L	--	--	51,000	20,400	5,100
	lbs/day	--	--		960	2550

Table 7. Effluent Limits for DP 001 at M-001

Parameter	Units	Effluent Limitations				
		Average Monthly	Average Weekly	Instantaneous Maximum	Daily Maximum	6-Month Median
Phenolic Compounds (non-chlorinated) [c]	µg/L	255	--	2,600	1,000	250
	lbs/day	120	--		480	120
Chlorinated Phenolics[d]	µg/L	8.5	--	85	34	8.5
	lbs/day	4	--		16	4

Values rounded to two significant figures. To be conservative, 6-month median, daily maximum and instantaneous maximum mass emission values are computed using seawater desalination facility flow (filter backwash, concentrated seawater and subsequent rinse wastewater) of 56.59 MGD, consistent with mass emission requirements established in Order No. R8-2006-0034.

a Table A of the Ocean Plan requires dischargers to, as a monthly average, remove 75% of suspended solids from the influent stream before discharging wastewater to the Pacific Ocean, except that the effluent limitation to be met shall not be less than 60 mg/L. Because this Facility is not a POTW, an effluent limitation of 60 mg/L is appropriate and established for the Facility's discharge.

b The chronic toxicity of the effluent shall be expressed and reported in TUc, where TUc = 100/NOEC. The No Observed Effect Concentration (NOEC) is the highest effluent concentration to which organisms are exposed in a chronic test, that causes no observable adverse effect on the test organisms (e.g., the highest concentration of toxicant to which the values for the observed responses are not statistically significantly different from the controls).

c Non-chlorinated phenolic compounds represent the sum of 2,4-dimethylphenol, 4,6-dinitro-2-methylphenol,2,4-dinitrophenol, 2-methylphenol, 4-methylphenol, 2-nitrophenol, 4-nitrophenol, and phenol.

d Chlorinated phenolic compounds represent the sum of 4-chloro-3-methylphenol, 2-chlorophenol, pentachlorophenol, 2,4,5-trichlorophenol, and 2,4,6-trichlorophenol.

2. The pH of the wastes discharged shall be at all times within the range of 6.0 to 9.0 pH units.

3. The temperature of wastes discharged shall not exceed the natural temperature of the receiving waters, as measured by the ocean intake water temperature, by more than 20°F.

4. The total daily discharge flow from the Facility, including concentrated seawater, filter backwash water and RO cleaning solutions subsequent rinse wastewater, shall not exceed the actual intake pumps daily average flow multiplied by a factor of 0.447 (whether AES or the Discharger is operating those pumps). The Discharger shall implement measures to assure that the actual intake pumps daily average flow is monitored and recorded.

5. The waste discharge must be essentially free of:

   a. Material that is floatable or will become floatable upon discharge.

b. Settleable material or substances that may form sediments that will degrade benthic communities or other aquatic life.

c. Substances that will accumulate to toxic levels in marine waters, sediments or biota.

d. Substances that significantly decrease the natural light to benthic communities and other marine life.

e. Materials that result in aesthetically undesirable discoloration of the ocean surface.

6. Toxicity Requirements

There shall be no acute or chronic toxicity in the effluent after mixing with ambient seawater in a ratio of 1 to 7.5 nor shall the effluent cause any chronic toxicity in the receiving water. All waters shall be maintained free of toxic substances in concentrations which are toxic to, or which produce detrimental physiological responses in human, plant, animal, or indigenous aquatic life.

a. Definition of Chronic Toxicity

The chronic toxicity of the effluent shall be expressed and reported in TUc, where TUc = 100/NOEC. The No Observed Effect Concentration (NOEC) is the highest effluent concentration to which organisms are exposed in a chronic test, that causes no observable adverse effect on the test organisms (e.g., the highest concentration of toxicant to which the values for the observed responses are not statistically significantly different from the controls). In addition, NOEC and IC25/EC25 values in percent effluent shall also be reported. For this discharge, chronic toxicity is defined as an exceedance of the chronic toxicity effluent limitation specified in Discharge Specification A.1.a.

b. The Discharger shall conduct chronic toxicity monitoring of discharges, as specified in Attachment E - Monitoring and Reporting Program (M&RP).

c. The Discharger shall develop and submit to the Regional Water Board an Initial Investigation Toxicity Reduction Evaluation (IITRE) work plan within 90 days of the effective date of this permit. This workplan shall describe the steps the Discharger intends to follow if required by Toxicity Requirement d., below. The work plan shall include at a minimum:

1) A description of the investigation and evaluation techniques that will be used to identify potential causes/sources of the exceedance, effluent variability, and/or efficiency of the treatment system in removing toxic substances. This shall include a description of an accelerated chronic toxicity testing program.

2) A description of the methods to be used for investigating and maximizing in-house treatment efficiency and good housekeeping practices.

3) A description of the evaluation process to be used to determine if implementation of a more detailed TRE/TIE is necessary.

d. The Discharger shall implement the IITRE work plan whenever the results of chronic toxicity tests of the effluent exceed:

1) A two month median value of 8.5 TUc for survival or reproduction endpoint or,

2) Any single test value of 14.5 TUc for survival endpoint.

e. The Discharger shall develop a detailed Toxicity Reduction Evaluation and Toxicity Identification Evaluation (TRE/TIE) work plan that shall describe the steps the Discharger intends to follow if the implemented IITRE fails to identify the cause of, or rectify, the toxicity.

f. The Discharger shall use as guidance, at a minimum, EPA manuals EPA/600/2-88/070 (industrial), EPA/600/4-89-001A (municipal), EPA/600/6-91/005F (Phase I), EPA/600/R-92/080 (Phase II), and EPA-600/R-92/081 (Phase III) to identify the cause(s) of toxicity. If, during the life of this Order, the aforementioned EPA manuals are revised or updated, the revised/updated manuals may also be used as guidance. The detailed TRE/TIE work plan shall include:

1) Further actions to investigate and identify the cause of toxicity;

2) Actions the Discharger will take to mitigate the impact of the discharge and to prevent the recurrence of toxicity; and

3) A schedule for these actions.

g. The Discharger shall implement the TRE/TIE work plan if the IITRE fails to identify the cause of, or rectify, the toxicity, or if in the opinion of the Executive Officer the IITRE does not adequately address an identified toxicity problem.

h. The Discharger shall assure that adequate resources are available to implement the required TRE/TIE.

B. Land Discharge Specifications - N/A

C. Reclamation Specifications - N/A

D. Storm Water Discharge Specifications

1. Storm water[4] discharges shall not:

    a. Cause or contribute to a violation of any applicable water quality standards contained in the Basin Plan, or in the State or Federal regulations.

    b. Cause or threaten to cause pollution, contamination, or nuisance.

    c. Contain a hazardous substance equal to or in excess of a reportable quantity listed in 40 CFR Part 117 and/or 40 CFR Part 302.

    d. Adversely impact human health or the environment.

    e. Result in noncompliance with the lawful requirements of municipalities, counties, drainage districts, and other local agencies on storm water discharges into storm drain systems or other courses under their jurisdiction.

2. The Discharger must update and implement the Storm Water Pollution Prevention Plan for the Facility in accordance with Attachment “J” of this Order.

V. RECEIVING WATER LIMITATIONS

A. Surface Water Limitations

1. Receiving water limitations are based upon water quality objectives contained in the Ocean Plan. As such, they are a required part of this Order. Unless specifically excepted by this Order, ***the wastewater discharged at DP 001*** shall not cause the following in the receiving waters of the Pacific Ocean:

    a. Thermal Characteristics

        1) Temperature increases in the natural water by more than 4°F at (a) the shoreline, (b) the surface of any ocean substrate, or (c) the ocean surface beyond 1,000 feet from the discharge system. The surface temperature limitation shall be maintained at least 50 percent of the duration of any complete tidal cycle.

---

[4] *Storm water means storm water runoff and surface runoff and drainage.*

2) The maximum discharge temperature shall not exceed the natural temperature of receiving waters by more than 20°F.

3) The discharge shall occur at a sufficient distance from the areas of special biological significance to assure the maintenance of natural temperature in these areas.

4) The discharge shall occur away from the shoreline to achieve dispersion through the vertical water column.

b. Physical Characteristics

1) Floating particulates and grease and oil shall not be visible.

2) The discharge of waste shall not cause aesthetically undesirable discoloration of the ocean surface.

3) Natural light shall not be significantly reduced at any point outside the initial dilution zone as the result of the discharge of waste.

4) The rate of deposition of inert solids and the characteristics of inert solids in ocean sediments shall not be changed such that benthic communities are degraded.

c. Chemical Characteristics

1) The dissolved oxygen concentration shall not at any time be depressed more than 10 percent from that which occurs naturally, as the result of the discharge of oxygen demanding waste materials.

2) The pH shall not change at any time more than 0.2 units from that which occurs naturally.

3) The dissolved sulfide concentration of waters in and near sediments shall not significantly increase above that which is present under natural conditions.

4) The discharge shall not increase the concentration of substances set forth in Chapter II, Table B, in marine sediments to levels which would degrade indigenous biota.

5) The concentration of organic materials in marine sediments shall not increase to levels which would degrade marine life.

6) Nutrient materials shall not cause objectionable aquatic growths or degrade indigenous biota.

7) There shall be no acute or chronic toxicity in the effluent after mixing with ambient seawater in a ratio of 1 to 7.5, nor shall the effluent cause any chronic toxicity in the receiving water. All waters shall be maintained free of toxic substances in concentrations which are toxic to, or which produce detrimental physiological responses in human, plant, animal, or indigenous aquatic life.

d. Biological Characteristics

1) Marine communities, including vertebrate, invertebrate, and plant species shall not be degraded.

2) The natural taste, odor, and color of fish, shellfish, or other marine resources used for human consumption shall not be altered.

3) The concentration of organic materials in fish, shellfish or other marine resources used for human consumption shall not bioaccumulate to levels that are harmful to human health.

e. Radioactivity

Discharge of radioactive waste, which meets the definition of “pollutant” at 40 CFR 122.2, shall not degrade marine life.

2. General Specifications

a. The Discharger shall take all reasonable steps to minimize any adverse impact to receiving waters resulting from noncompliance with any effluent limitations specified in this Order, including such accelerated or additional monitoring as necessary to determine the nature and impact of the noncomplying discharge.

b. The wastewater discharged shall not cause any visible oil, grease, scum, floating, or suspended material or foam in the receiving water, nor cause the receiving water to have an objectionable odor.

c. The wastewater discharged shall not cause aesthetically undesirable discoloration of the ocean surface.

d. The wastewater discharged shall not cause the transmittance of natural light to be

significantly[5] reduced.

e. The wastewater discharged shall not cause the rate of deposition of inert solids and the characteristics of inert solids in ocean sediments to be changed such that benthic communities are degraded.

f. Pollutants not specifically mentioned and limited in this Order shall not be discharged at levels that will bioaccumulate in aquatic resources to levels which are harmful to human health.

B. Groundwater limitations - N/A

VI. PROVISIONS

A. Standard Provisions

1. **Standard Provisions.** The Discharger shall comply with all *State and Federal Standard Provisions* included in Attachment D of this Order.

2. **Regional Water Board Standard Provisions.** The Discharger shall comply with the following provisions:

   a. Neither the treatment nor the discharge of waste shall create, or threaten to create, a nuisance or pollution as defined by Section 13050 of the California Water Code.

   b. This Order is not transferable to any person except after notice to and approval by the Executive Officer. The Executive Officer may require modification or revocation and reissuance of this Order to change the name of the Discharger and incorporate such other requirements as may be necessary under the Clean Water Act.

   c. The Discharger shall submit a separate Report of Waste Discharge 180 days before using source water for desalination other than seawater from the HBGS's cooling water discharge pipeline.

   d. The Discharger shall maintain a copy of this Order at the site so that it is available to site operating personnel at all times. Key operating personnel shall be familiar with its content.

   e. The Discharger shall comply with all of the terms, requirements and conditions of this Order. Any violation of this Order constitutes a violation of the CWC and/or may constitute a violation of the CWA and its regulations, and is grounds for

[5] *Significant difference is defined in the Ocean Plan as a statistically significant difference in the means of two distributions of sampling results at the 95 percent confidence level.*

enforcement action, termination of the Order, revocation and reissuance of the Order, or modification, or for denial of an application for modification, or reissuance of the Order; or a combination thereof.

f. The Discharger shall furnish, within a reasonable time, any information the Regional Water Board or EPA may request to determine whether cause exists for modifying, revoking and reissuing, or terminating this Order. The Discharger shall also furnish to the Regional Water Board, upon request, copies of records required to be kept by this Order.

g. The Discharger shall file with the Regional Water Board a separate Report of Waste Discharge within 180 days of receipt of notification that the HBGS is permanently ceasing operations of the once through cooling water system and/or if HBGS is permanently ceasing electricity production at the current site.

h. The Discharger shall give advance notice to the Regional Water Board as soon as possible of any planned physical alterations or additions to the permitted facility.

i. The Discharger shall take all reasonable steps to minimize or prevent any discharge that has a reasonable likelihood of adversely affecting human health or the environment.

j. The Discharger shall, at all times, properly operate and maintain all facilities and systems of treatment and control, including disposal facilities, and related appurtenances which are installed or used by the Discharger to achieve compliance with this Order. Proper operation and maintenance also includes adequate laboratory controls, appropriate quality assurance procedures, effective performance, adequate funding, adequate staffing and training, and adequate process controls. This provision requires the operation of back up or auxiliary facilities or similar systems which are installed by a Discharger only when the operation is necessary to achieve compliance with the conditions of the Order.

k. The requirements prescribed herein do not authorize the commission of any act causing injury to the property of another, nor protect the Discharger from his liabilities under federal, state, or local laws, nor guarantee the Discharger a capacity right in the receiving waters.

l. Bypass (the intentional diversion of waste streams from any portion of a treatment facility) is prohibited unless it is permitted under the terms of this Order. The Regional Water Board may take enforcement action against the Discharger for unpermitted bypass unless:

1) Bypass was unavoidable to prevent loss of life, personal injury, or severe property damage. (Severe property damage means substantial physical damage to property, damage to the treatment facilities that causes them to become inoperable, or substantial and permanent loss of natural resources that can reasonably be expected to occur in the absence of a bypass. Severe

property damage does not mean economic loss caused by delays in production);

2) There were no feasible alternatives to bypass, such as the use of auxiliary treatment facilities, retention of untreated waste, or maintenance during normal periods of equipment down time. This condition is not satisfied if adequate back-up equipment should have been installed in the exercise of reasonable engineering judgment to prevent a bypass that could occur during normal periods of equipment down time or preventive maintenance; and

3) The Discharger submitted a notice at least ten days in advance of the need for a bypass to the appropriate Regional Water Board. The Discharger may allow a bypass to occur that does not cause effluent limitations to be exceeded, but only if it is for essential maintenance to assure efficient operation. In such a case, the above bypass conditions are not applicable. The Discharger shall promptly notify the Regional Water Board and the EPA within 24 hours of each such bypass.

m. It shall not be a defense for the Discharger in an enforcement action that it would have been necessary to halt or reduce the permitted activity in order to maintain compliance with the conditions of this Order.

n. The Discharger shall take all reasonable steps to minimize any adverse impact to receiving waters resulting from noncompliance with any requirements specified in this Order, including such accelerated or additional monitoring as necessary to determine the nature and impact of the noncomplying discharge.

o. The provisions of this Order are severable, and if any provision of this Order, or the application of any provisions of this Order to any circumstance, is held invalid, the application of such provision to other circumstances, and the remainder of this Order shall not be affected thereby.

p. Collected screenings, sludge, and other solids removed from liquid wastes shall be disposed of in a manner approved by the Regional Water Board's Executive Officer.

q. In the event of any change in control or ownership of land or waste discharge facility presently owned or controlled by the Discharger, the Discharger shall notify the succeeding owner or operator of the existence of this Order by letter, a copy of which shall be forwarded to the Regional Water Board.

r. Failure to comply with provisions or requirements of this Order, or violation of other applicable laws or regulations governing discharges from this facility, may subject the Discharger to administrative or civil liabilities, criminal penalties, and/or other enforcement remedies to ensure compliance. Additionally, certain violations may subject the Discharger to civil or criminal enforcement from appropriate local, state, or federal law enforcement entities.

s. In the event the Discharger does not comply or will be unable to comply for any reason, with any prohibition, or receiving water limitation of this Order, the Discharger shall notify the Regional Water Board by telephone (951) 782-4130 within 24 hours of having knowledge of such noncompliance, and shall confirm this notification in writing within five days, unless the Regional Water Board waives confirmation. The written notification shall state the nature, time, duration, and cause of noncompliance, and shall describe the measures being taken to remedy the current noncompliance and, prevent recurrence including, where applicable, a schedule of implementation. Other noncompliance requires written notification, as above, at the time of the normal monitoring report.

B. Monitoring and Reporting Program Requirements

The Discharger shall comply with the Monitoring and Reporting Program, and future revisions thereto, in Attachment E of this Order. This monitoring and reporting program may be modified by the Executive Officer at any time during the term of this Order, and may include an increase in the number of parameters to be monitored, the frequency of the monitoring or the number and size of samples to be collected. Any increase in the number of parameters to be monitored, the frequency of the monitoring or the number and size of samples to be collected may be reduced back to the levels specified in the original monitoring and reporting program at the discretion of the Executive Officer.

C. Special Provisions

1. Reopener Provisions

a. This Order may be reopened to address any changes in State or federal adopted rules, policies or regulations that would affect the quality requirements for the discharges.

b. This Order may be reopened for modification to include an effluent limitation if monitoring establishes that the discharge causes, has the reasonable potential to cause, or contributes to an excursion above an Ocean Plan Table B water quality objective.

c. This Order may be reopened to include effluent limitations for pollutants determined to be present in the discharge in concentrations that pose a reasonable potential to cause or contribute to violations of water quality objectives.

d. This Order may be reopened and modified in accordance with the requirements set forth at 40 CFR 122 and 124, to include the appropriate conditions or limits to address demonstrated effluent toxicity based on newly available information, or to implement any EPA-approved new State water quality standards applicable to effluent toxicity.

e. This Order may be modified, revoked and reissued, or terminated for cause. The filing of a request by the Discharger for modification, revocation and reissuance, or termination of this Order or a notification of planned changes or anticipated noncompliance does not stay any permit condition.

f. This Order will be reopened to address physical or operational alterations to the permitted facility that would affect the requirements for discharges from the facility.

2. Special Studies, Technical Reports and Additional Monitoring Requirements - N/A

3. Best Management Practices and Pollution Prevention

a. The Discharger shall implement Best Management Practices to control the discharge of pollutants in stormwater discharges associated with industrial activities.

b. Pollutant Minimization Program

Reporting protocols in the Monitoring and Reporting Program, Attachment E, Section X.B.4 describe sample results that are to be reported as Detected but Not Quantified (DNQ) or Not Detected (ND). Definitions for a reported Minimum Level (ML) and Method Detection Limit (MDL) are provided in Attachment A. These reporting protocols and definitions are used in determining the need to conduct a Pollution Minimization Program (PMP) as follows:

The Discharger shall be required to develop and conduct a PMP as further described below when there is evidence (e.g., sample results reported as DNQ when the effluent limitation is less than the MDL, sample results from analytical methods more sensitive than those methods required by this Order, presence of whole effluent toxicity, health advisories for fish consumption, results of benthic or aquatic organism tissue sampling) that a pollutant is present in the effluent above an effluent limitation and either:

1) The concentration of the pollutant is reported as DNQ and the effluent limitation is less than the reported ML; or

2) The concentration of the pollutant is reported as ND and the effluent limitation is less than the MDL.

The goal of the PMP shall be to reduce all potential sources of a pollutant through pollutant minimization (control) strategies, including pollution prevention measures as appropriate, to maintain the effluent concentration at or below the

effluent limitation. Pollution prevention measures may be particularly appropriate for persistent bioaccumulative priority pollutants where there is evidence that beneficial uses are being impacted. The Regional Water Board may consider cost-effectiveness when establishing the requirements of a PMP. The completion and implementation of a Pollution Prevention Plan, if required pursuant to CWC Section 13263.3(d), shall be considered to fulfill the PMP requirements.

The PMP shall include, but not be limited to, the following actions and submittals acceptable to the Regional Water Board:

1. An annual review and semi-annual monitoring of potential sources of the reportable pollutant(s), which may include fish tissue monitoring and other bio-uptake sampling;
2. Quarterly monitoring for the reportable pollutant(s) in the influent to the wastewater treatment system;
3. Submittal of a control strategy designed to proceed toward the goal of maintaining concentrations of the reportable pollutant(s) in the effluent at or below the effluent limitation;
4. Implementation of appropriate cost-effective control measures for the reportable pollutant(s), consistent with the control strategy; and
5. An annual status report that shall be sent to the Regional Water Board including:
   a. All PMP monitoring results for the previous year;
   b. A list of potential sources of the reportable pollutant(s);
   c. A summary of all actions undertaken pursuant to the control strategy; and
   d. A description of actions to be taken in the following year.

4. Construction, Operation and Maintenance Specifications

The Discharger shall develop an "Operation and Maintenance Manual (O&M Manual)". If an O&M Manual has been developed, the Discharger shall update it as necessary to conform with latest plant changes and requirements. The O&M Manual shall be readily available to operating personnel onsite. The O&M Manual shall include the following:

a. Detailed description of safe and effective operation and maintenance of treatment processes, process control instrumentation and equipment.
b. Description of laboratory and quality assurance procedures.
c. Process and equipment inspection and maintenance schedules,

d. Description of safeguards to assure that, should there be reduction, loss, or failure of electric power, the Discharger will be able to comply with the terms and conditions of this Order.
e. Description of preventive (fail-safe) and contingency (cleanup) plans for controlling accidental discharges, and for minimizing the effect of such events. These plans shall identify the possible sources (such as loading and storage areas, power outage, waste treatment unit failure, process equipment failure, tank and piping failure) of accidental discharges, untreated or partially treated waste bypass, and polluted drainage.

5. Other Special Provisions - N/A

6. Compliance Schedules - N/A

VII. COMPLIANCE DETERMINATION

Compliance with the effluent limitations contained in Section IV. of this Order will be determined as specified below:

A. General.
Compliance with effluent limitations for reportable pollutants shall be determined using sample reporting protocols defined in the MRP (Attachment E) and Attachment A of this Order. For purposes of reporting and administrative enforcement by the Regional and State Water Boards, the Discharger shall be deemed out of compliance with effluent limitations if the concentration of the reportable pollutant in the monitoring sample is greater than the effluent limitation and greater than or equal to the reported reporting level (RL).

B. Multiple Sample Data.
When determining compliance with an AMEL or MDEL for priority pollutants and more than one sample result is available, the Discharger shall compute the arithmetic mean unless the data set contains one or more reported determinations of “Detected, but Not Quantified” (DNQ) or “Not Detected” (ND). In those cases, the Discharger shall compute the median in place of the arithmetic mean in accordance with the following procedure:

1. The data set shall be ranked from low to high, ranking the reported ND determinations lowest, DNQ determinations next, followed by quantified values (if any). The order of the individual ND or DNQ determinations is unimportant.

2. The median value of the data set shall be determined. If the data set has an odd number of data points, then the median is the middle value. If the data set has an even number of data points, then the median is the average of the two values around the middle unless one or both of the points are ND or DNQ, in which case

the median value shall be the lower of the two data points where DNQ is lower than a value and ND is lower than DNQ.

C. Average Monthly Effluent Limitation (AMEL).
If the average (or when applicable, the median determined by subsection B above for multiple sample data) of daily discharges over a calendar month exceeds the AMEL for a given parameter, this will represent a single violation, though the Discharger will be considered out of compliance for each day of that month for that parameter (e.g., resulting in 31 days of non-compliance in a 31-day month). If only a single sample is taken during the calendar month and the analytical result for that sample exceeds the AMEL, the Discharger will be considered out of compliance for that calendar month. The Discharger will only be considered out of compliance for days when the discharge occurs. For any one calendar month during which no sample (daily discharge) is taken, no compliance determination can be made for that calendar month.

D. Maximum Daily Effluent Limitation (MDEL).
If a daily discharge or when applicable, the median determined by subsection B above for multiple sample data of a daily discharge exceeds the MDEL for a given parameter, the Discharger will be considered out of compliance for that parameter for that 1 day only within the reporting period. For any 1 day during which no sample is taken, no compliance determination can be made for that day.

E. Instantaneous Minimum Effluent Limitation.
If the analytical result of a single grab sample is lower than the instantaneous minimum effluent limitation for a parameter, the Discharger will be considered out of compliance for that parameter for that single sample. Non-compliance for each sample will be considered separately (e.g., the results of two grab samples taken within a calendar day that both are lower than the instantaneous minimum effluent limitation would result in two instances of non-compliance with the instantaneous minimum effluent limitation).

F. Instantaneous Maximum Effluent Limitation.
If the analytical result of a single grab sample is higher than the instantaneous maximum effluent limitation for a parameter, the Discharger will be considered out of compliance for that parameter for that single sample. Non-compliance for each sample will be considered separately (e.g., the results of two grab samples taken within a calendar day that both exceed the instantaneous maximum effluent limitation would result in two instances of non-compliance with the instantaneous maximum effluent limitation).

G. Six-month Median Effluent Limitation.
If the median of daily discharges over any 180-day period exceeds the six-month median effluent concentration limitation for a given parameter, the Discharger will be considered out of compliance for each day of that 180-day period for that parameter. The next assessment of compliance will occur after the next sample is taken. If only a

single sample is taken during a given 180-day period and the analytical result for that sample exceeds the six-month median, the Discharger will be considered out of compliance for the 180-day period. For any 180-period during which no sample is taken, no compliance determination can be made for the six-month median limitation.

Similarly, compliance with the six-month median mass emissions limit shall be determined by comparing the calculated mass limit with calculated mass discharges. If mass discharges exceed the allowed mass discharges, the Discharger is not in compliance. The calculated mass discharges shall be determined by using the same equation in calculating the mass emission limit and using the allowable six-month median effluent concentration and the observed flow rate in millions of gallons per day.

H. Mass and Concentration Limitations

Compliance with mass and concentration effluent limitations for the same parameter shall be determined separately with their respective limitations. When the concentration of a constituent in an effluent sample is determined to be “Not Detected” (ND) or “Detectable but not quantifiable” (DNQ), the corresponding mass emission rate (MER) determined from that sample concentration shall also be reported as “ND” or “DNQ”.

I. Ocean Plan Provisions for Table B Constituents

1. Sampling Reporting Protocols

   a) The Discharger shall report with each sample result the reported Minimum Level (ML) and the laboratory’s current Method Detection Limit (MDL).

   b) The Discharger shall also report results of analytical determinations for the presence of chemical constituents in a sample using the following reporting protocols:

      i. Sample results greater than or equal to the reported ML must be reported “as measured” by the laboratory (i.e., the measured chemical concentration in the sample).

      ii. Sample results less than the reported ML, but greater than or equal to the laboratory’s MDL, must be reported as “Detected, but Not Quantified”, or DNQ. The laboratory must write the estimated chemical concentration of the sample next to DNQ as well as the words “Estimated Concentration” (may be shorted to Est. Conc.”).

      iii. Sample results less than the laboratory’s MDL must be reported as “Not Detected”, or ND.

2. Compliance Determination

   Sufficient sampling and analysis shall be required to determine compliance with the effluent limitation.

   a) Compliance with Single-Constituent Effluent Limitations.

      The Discharger shall be deemed out of compliance with an effluent limitation or discharge specification if, based on reliable data, the concentration of the constituent in the monitoring sample is greater than the effluent limitation or discharge specification and greater than or equal to the ML.

   b) Compliance with Effluent Limitations Expressed as a Sum of Constituents.

      The Discharger shall be deemed out of compliance with an effluent limitation that applies to the sum of a group of chemicals (e.g., chlorinated phenolics) if, based on reliable data, the sum of the individual pollutant concentrations is greater than the effluent limitation. Individual pollutants of the group will be considered to have a concentration of zero if the constituent is reported as ND or DNQ.

   c) Mass Emission Rate. The mass emission rate (MER), in pounds per day, shall be obtained from the following calculation for any calendar day:

      Mass Emission Rate (lbs/day) = 8.34 x Q x C

In which Q and C are the flow rate in million gallons per day and the constituent concentration in mg/L, respectively, and 8.34 is a conversion factor (lbs/gallon of water). If a composite sample is taken, then C is the concentration measured in the composite sample and Q is the average flow rate occurring during the period over which the samples are composited.

ATTACHMENT A – DEFINITIONS

Acute Toxicity:

a. Acute Toxicity (TUa)

Expressed in Toxic Units Acute (TUa)

$$TUa = \frac{100}{96\text{-hr LC}_{50\%}}$$

b. Lethal Concentration 50% (LC 50)

LC 50 (percent waste giving 50% survival of test organisms) shall be determined by static or continuous flow bioassay techniques using standard marine test species as specified in Appendix III. If specific identifiable substances in wastewater can be demonstrated by the discharger as being rapidly rendered harmless upon discharge to the marine environment, but not as a result of dilution, the LC 50 may be determined after the test samples are adjusted to remove the influence of those substances.

When it is not possible to measure the 96-hour LC 50 due to greater than 50 percent survival of the test species in 100 percent waste, the toxicity concentration shall be calculated by the expression:

$$TUa = \frac{\log (100 - S)}{1.7}$$

where:

S = percentage survival in 100% waste. If S > 99, TUa shall be reported as zero.

Areas of Special Biological Significance (ASBS): are those areas designated by the State Water Board as ocean areas requiring protection of species or biological communities to the extent that alteration of natural water quality is undesirable. All Areas of Special Biological Significance are also classified as a subset of STATE WATER QUALITY PROTECTION AREAS.

Average Monthly Effluent Limitation (AMEL): the highest allowable average of daily discharges over a calendar month, calculated as the sum of all daily discharges measured during a calendar month divided by the number of daily discharges measured during that month.

Average Weekly Effluent Limitation (AWEL): the highest allowable average of daily discharges over a calendar week (Sunday through Saturday), calculated as the sum of all

daily discharges measured during a calendar week divided by the number of daily discharges measured during that week.

Chlordane shall mean the sum of chlordane-alpha, chlordane-gamma, chlordene-alpha, chlordene-gamma, nonachlor-alpha, nonachlor-gamma, and oxychlordane.

Chronic Toxicity: This parameter shall be used to measure the acceptability of waters for supporting a healthy marine biota until improved methods are developed to evaluate biological response.

a. Chronic Toxicity (TUc)

   Expressed as Toxic Units Chronic (TUc)

$$TUc = \frac{100}{NOEL}$$

b. No Observed Effect Level (NOEL)

   The NOEL is expressed as the maximum percent effluent or receiving water that causes no observable effect on a test organism, as determined by the result of a critical life stage toxicity test listed in Appendix II.

Daily Discharge: Daily Discharge is defined as either: (1) the total mass of the constituent discharged over the calendar day (12:00 am through 11:59 pm) or any 24-hour period that reasonably represents a calendar day for purposes of sampling (as specified in the permit), for a constituent with limitations expressed in units of mass or; (2) the unweighted arithmetic mean measurement of the constituent over the day for a constituent with limitations expressed in other units of measurement (e.g., concentration).

The daily discharge may be determined by the analytical results of a composite sample taken over the course of one day (a calendar day or other 24-hour period defined as a day) or by the arithmetic mean of analytical results from one or more grab samples taken over the course of the day.

For composite sampling, if 1 day is defined as a 24-hour period other than a calendar day, the analytical result for the 24-hour period will be considered as the result for the calendar day in which the 24-hour period ends.

DDT shall mean the sum of 4,4’DDT, 2,4’DDT, 4,4’DDE, 2,4’DDE, 4,4’DDD, and 2,4’DDD.

Degrade. Degradation shall be determined by comparison of the waste field and reference site(s) for characteristic species diversity, population density, contamination, growth anomalies, debility, or supplanting of normal species by undesirable plant and animal species. Degradation occurs if there are significant differences in any of three major biotic

groups, namely, demersal fish, benthic invertebrates, or attached algae. Other groups may be evaluated where benthic species are not affected, or are not the only ones affected.

Detected, but Not Quantified (DNQ) are those sample results less than the reported Minimum Level, but greater than or equal to the laboratory's MDL.

Dichlorobenzenes shall mean the sum of 1,2- and 1,3-dichlorobenzene.

Downstream Ocean Waters shall mean waters downstream with respect to ocean currents.

Enclosed Bays are indentations along the coast that enclose an area of oceanic water within distinct headlands or harbor works. Enclosed bays include all bays where the narrowest distance between headlands or outermost harbor works is less than 75 percent of the greatest dimension of the enclosed portion of the bay. This definition includes but is not limited to: Humboldt Bay, Bodega Harbor, Tomales Bay, Drakes Estero, San Francisco Bay, Morro Bay, Los Angeles Harbor, Upper and Lower Newport Bay, Mission Bay, and San Diego Bay.

Grab Sample. A grab sample is an individual sample of a t least 100 mLs collected at a randomly selected time over a period not exceeding 15 minutes.

HCH shall mean the sum of the alpha, beta, gamma (lindane) and delta isomers of hexachlorocyclohexane.

Initial Dilution is the process which results in the rapid and irreversible turbulent mixing of wastewater with ocean water around the point of discharge.

For a submerged buoyant discharge, characteristic of most municipal and industrial wastes that are released from the submarine outfalls, the momentum of the discharge and its initial buoyancy act together to produce turbulent mixing. Initial dilution in this case is completed when the diluting wastewater ceases to rise in the water column and first begins to spread horizontally.

For shallow water submerged discharges, surface discharges, and nonbuoyant discharges, characteristic of cooling water wastes and some individual discharges, turbulent mixing results primarily from the momentum of discharge. Initial dilution, in these cases, is considered to be completed when the momentum induced velocity of the discharge ceases to produce significant mixing of the waste, or the diluting plume reaches a fixed distance from the discharge to be specified by the Regional Board, whichever results in the lower estimate for initial dilution.

Instantaneous Maximum Effluent Limitation: the highest allowable value for any single grab sample or aliquot (i.e., each grab sample or aliquot is independently compared to the instantaneous maximum limitation).

Instantaneous Minimum Effluent Limitation: the lowest allowable value for any single grab sample or aliquot (i.e., each grab sample or aliquot is independently compared to the instantaneous minimum limitation).

Mariculture is the culture of plants and animals in marine waters independent of any pollution source.

Material: (a) In common usage: (1) the substance or substances of which a thing is made or composed (2) substantial; (b) For purposes of the California Ocean Plan relating to waste disposal, dredging and the disposal of dredged material and fill, MATERIAL means matter of any kind or description which is subject to regulation as waste, or any material dredged from the navigable waters of the United States.

Maximum Daily Effluent Limitation (MDEL): the highest allowable daily discharge of a pollutant.

Method Detection Limit (MDL) is the minimum concentration of a substance that can be measured and reported with 99 percent confidence that the analyte concentration is greater than zero, as defined in title 40 of the Code of Federal Regulatons, Part 136 Attachment B.

Minimum Level (ML) is the concentration at which the entire analytical system must give a recognizable signal and acceptable calibration point. The ML is the concentration in a sample that is equivalent to the concentration of the lowest calibration standard analyzed by a specific analytical procedure, assuming that all the method-specified sample weights, volumes, and processing steps have been followed.

Natural Light: Reduction of natural light may be determined by the Regional Water Board by measurement of light transmissivity or total irradiance, or both, according to the monitoring needs of the Regional Water Board.

Not Detected (ND) are those sample results less than the laboratory's MDL.

Ocean Waters are the territorial marine waters of the State as defined by California law to the extent these waters are outside of enclosed bays, estuaries, and coastal lagoons. If a discharge outside the territorial waters of the State could affect the quality of the waters of the state, the discharge may be regulated to assure no violation of the Ocean Plan will occur in ocean waters.

Pollutant Minimization Program (PMP) means waste minimization and pollution prevention actions that include, but are not limited to, product substitution, waste stream recycling, alternative waste management methods, and education of the public and businesses. The goal of the PMP shall be to reduce all potential sources of Ocean Plan Table B pollutants through pollutant minimization (control) strategies, including pollution prevention measures as appropriate, to maintain the effluent concentration at or below the water quality-based effluent limitation. Pollution prevention measures may be particularly appropriate for persistent bioaccumulative priority pollutants where there is evidence that beneficial uses are being impacted. The Regional Water Board may consider cost effectiveness when establishing the requirements of a PMP. The completion and implementation of a Pollution Prevention Plan, if

required pursuant to Water Code section 13263.3(d), shall be considered to fulfill the PMP requirements.

Practical Quantitation Level (PQL) is the lowest concentration of a substance that can be determined within ± 20 percent of the true concentration by 75 percent of the analytical laboratories tested in a performance evaluation study. Alternatively, if performance data are not available, the PQL is the method detection limit (MDL) x 5 for carcinogens and MDL x 10 for noncarcinogens.

Reported Minimum Level is the ML (and its associated analytical method) chosen by the Discharger for reporting and compliance determination from the MLs included in this Order. The MLs included in this Order correspond to approved analytical methods for reporting a sample result that are selected by the Regional Water Board either from Appendix II of the Ocean Plan in accordance with section III.C.5.a. of the Ocean Plan or established in accordance with section III.C.5.b. of the Ocean Plan. The ML is based on the proper application of method-based analytical procedures for sample preparation and the absence of any matrix interferences. Other factors may be applied to the ML depending on the specific sample preparation steps employed. For example, the treatment typically applied in cases where there are matrix-effects is to dilute the sample or sample aliquot by a factor of ten. In such cases, this additional factor must be applied to the ML in the computation of the reported ML.

Shellfish are organisms identified by the California Department of Public Health as shellfish for public health purposes (i.e., mussels, clams and oysters).

Significant Difference is defined as a statistically significant difference in the means of two distributions of sampling results at the 95 percent confidence level.

Six-month Median Effluent Limitation: the highest allowable moving median of all daily discharges for any 180-day period.

State Water Quality Protection Areas (SWQPAs) are non-terrestrial marine or estuarine areas designated to protect marine species or biological communities from an undesirable alteration in natural water quality. All AREAS OF SPECIAL BIOLOGICAL SIGNIFICANCE (ASBS) that were previously designated by the State Water Board in Resolution No.s 74-28, 74-32, and 75-61 are now also classified as a subset of State Water Quality Protection Areas and require special protections afforded by the Ocean Plan.

Toxicity Reduction Evaluation (TRE) is a study conducted in a step-wise process designed to identify the causative agents of effluent or ambient toxicity, isolate the sources of toxicity, evaluate the effectiveness of toxicity control options, and then confirm the reduction in toxicity. The first steps of the TRE consist of the collection of data relevant to the toxicity, including additional toxicity testing, and an evaluation of facility operations and maintenance practices, and best management practices. A Toxicity Identification Evaluation (TIE) may be required as part of the TRE, if appropriate. (A TIE is a set of procedures to identify the specific chemical(s) responsible for toxicity. These procedures are performed in three

phases (characterization, identification, and confirmation) using aquatic organism toxicity tests.)

Waste: As used in the Ocean Plan, waste includes a Discharger's total discharge, of whatever origin, i.e., gross, not net, discharge.

ATTACHMENT B – VICINITY MAP

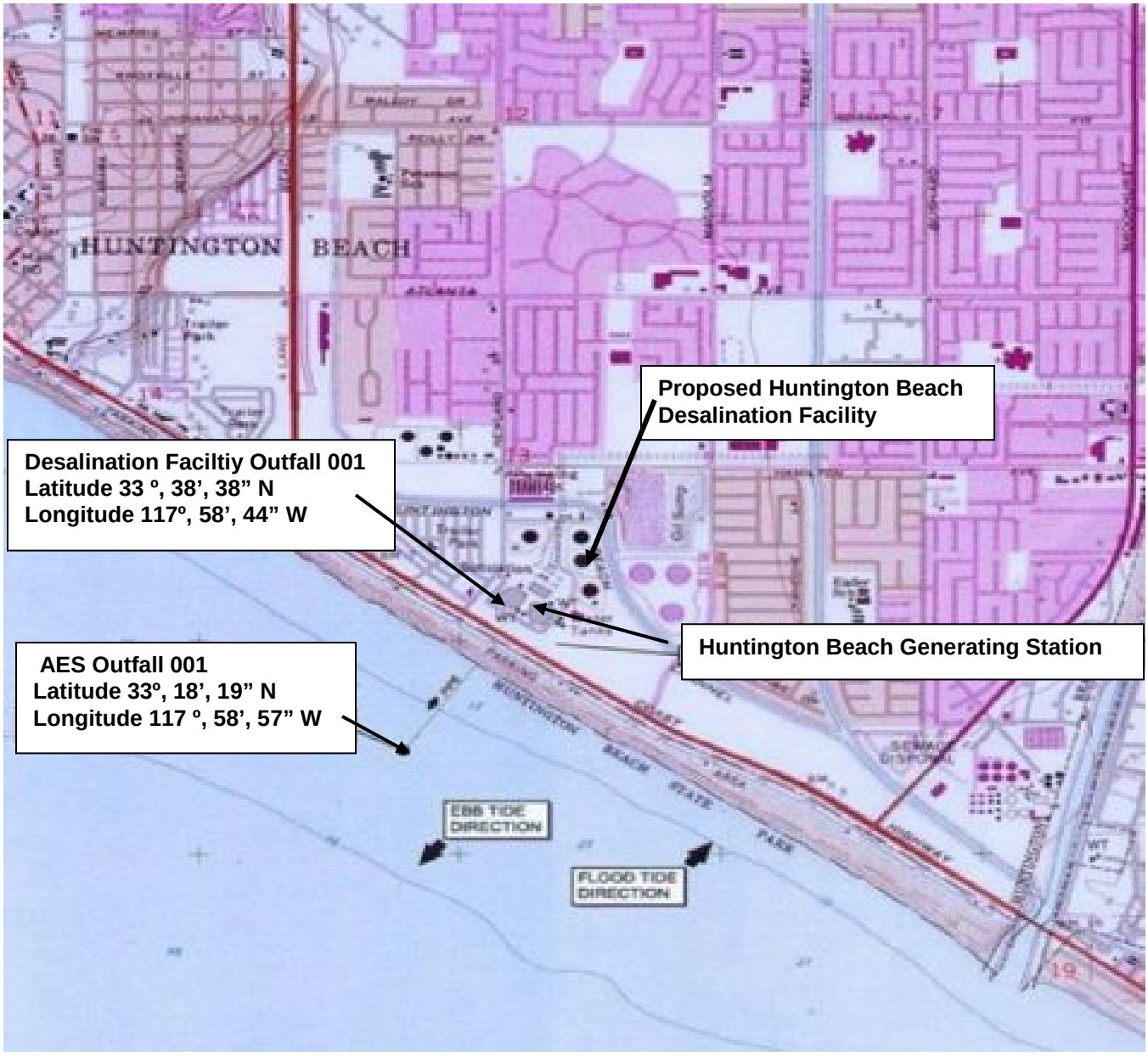

ATTACHMENT C2 – INTAKE/DISCHARGE POINT

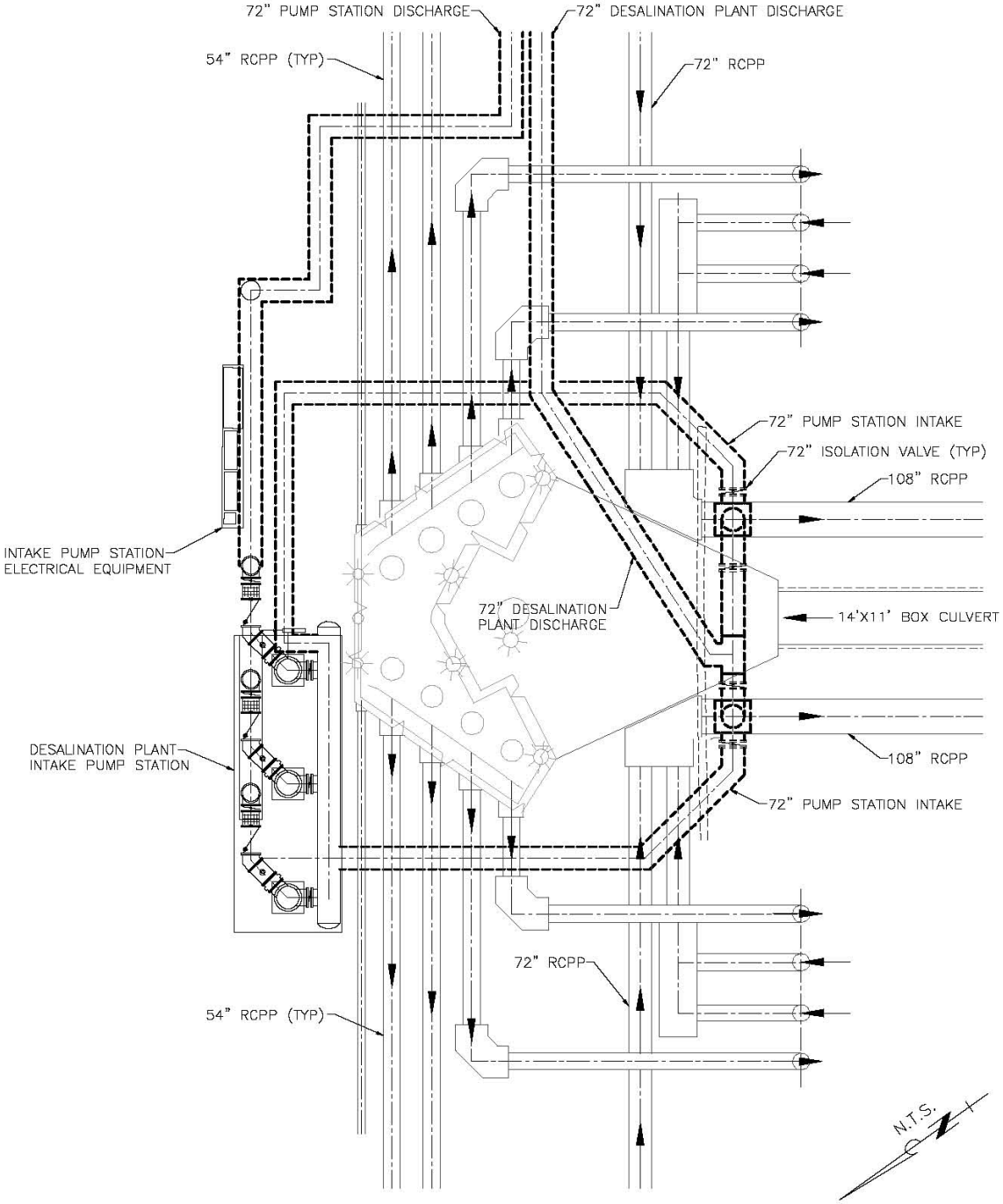

Desalination Facility/HBGS Cooling Water Connection

ATTACHMENT C1A – FLOW SCHEMATIC

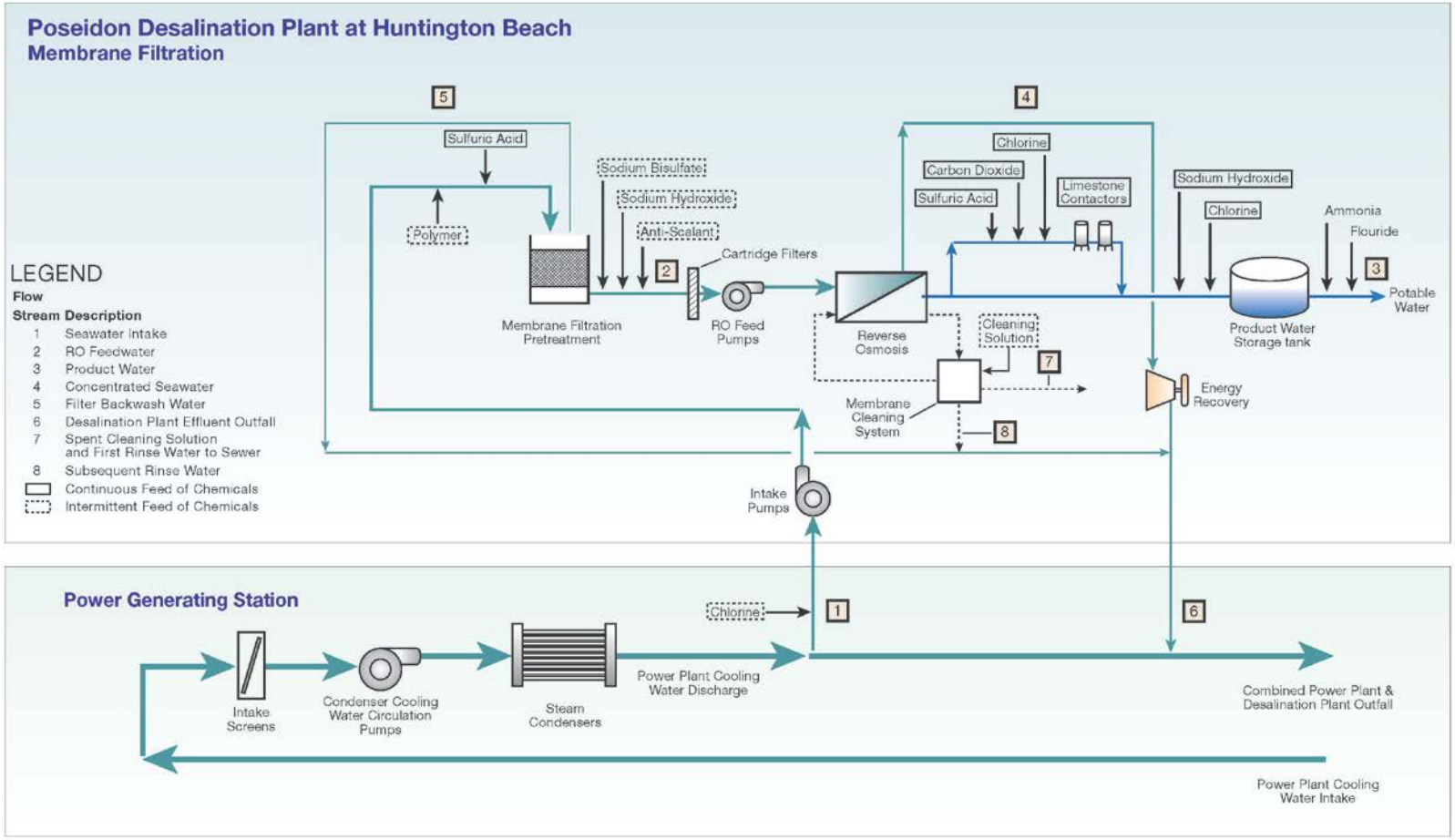

ATTACHMENT C1B – FLOW SCHEMATIC

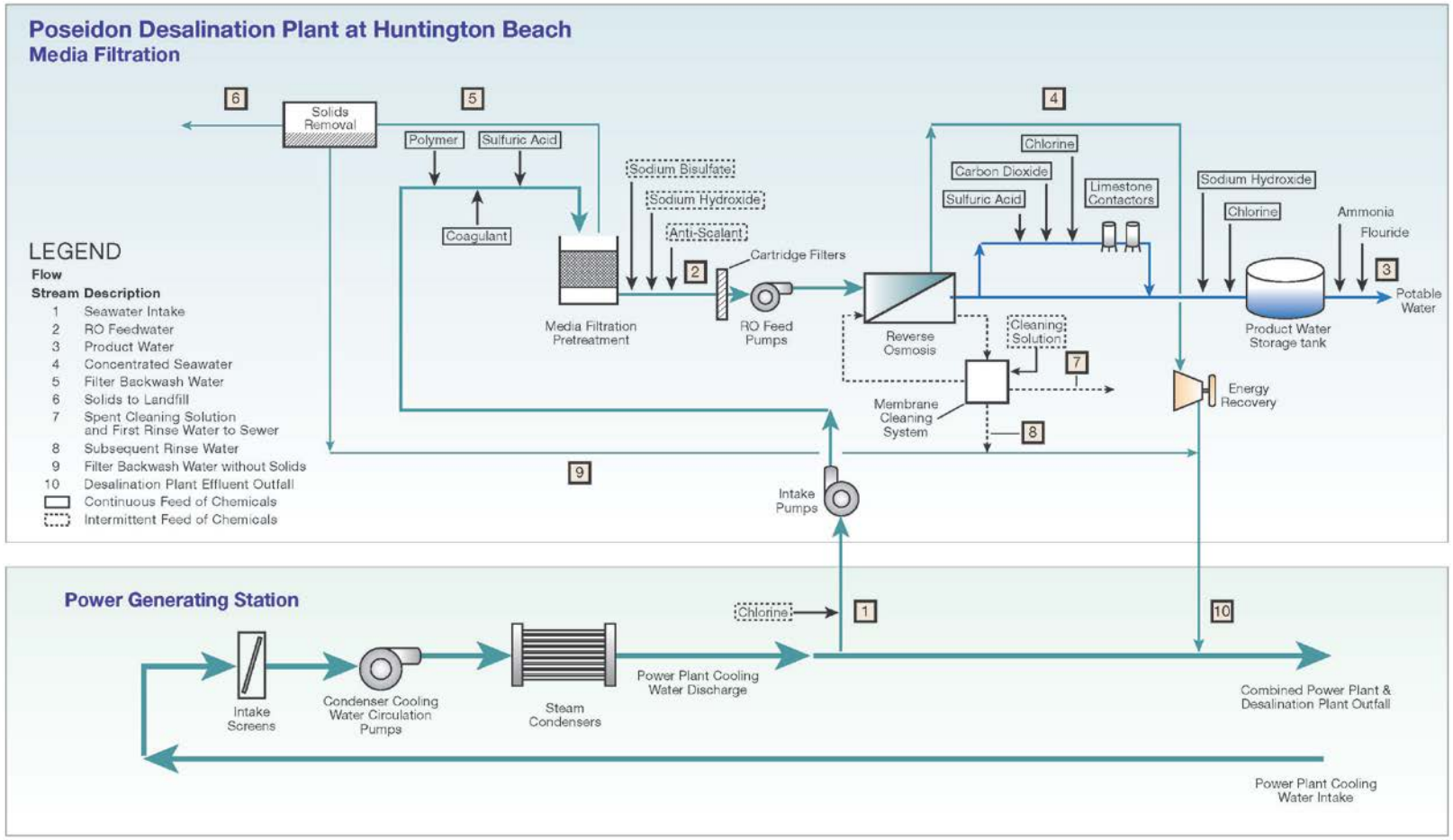

ATTACHMENT D – FEDERAL STANDARD PROVISIONS

I. STANDARD PROVISIONS – PERMIT COMPLIANCE

A. Duty to Comply

1. The Discharger must comply with all of the conditions of this Order. Any noncompliance constitutes a violation of the Clean Water Act (CWA) and the California Water Code and is grounds for enforcement action, for permit termination, revocation and reissuance, or modification; or denial of a permit renewal application. (40 C.F.R. § 122.41(a).)

2. The Discharger shall comply with effluent standards or prohibitions established under Section 307(a) of the CWA for toxic pollutants and with standards for sewage sludge use or disposal established under Section 405(d) of the CWA within the time provided in the regulations that establish these standards or prohibitions, even if this Order has not been modified to incorporate the requirement. (40 C.F.R. § 122.41(a)(1).)

B. Need to Halt or Reduce Activity Not a Defense

It shall not be a defense for a Discharger in an enforcement action that it would have been necessary to halt or reduce the permitted activity in order to maintain compliance with the conditions of this Order. (40 C.F.R. § 122.41(c).)

C. Duty to Mitigate

The Discharger shall take all reasonable steps to minimize or prevent any discharge or sludge use or disposal in violation of this Order that has a reasonable likelihood of adversely affecting human health or the environment. (40 C.F.R. § 122.41(d)

D. Proper Operation and Maintenance

The Discharger shall at all times properly operate and maintain all facilities and systems of treatment and control (and related appurtenances) which are installed or used by the Discharger to achieve compliance with the conditions of this Order. Proper operation and maintenance also includes adequate laboratory controls and appropriate quality assurance procedures. This provision requires the operation of backup or auxiliary facilities or similar systems that are installed by a Discharger only when necessary to achieve compliance with the conditions of this Order. (40 C.F.R. § 122.41(e).)

E. Property Rights

1. This Order does not convey any property rights of any sort or any exclusive privileges. (40 C.F.R. § 122.41(g).)

2. The issuance of this Order does not authorize any injury to persons or property or invasion of other private rights, or any infringement of state or local law or regulations. (40 C.F.R. § 122.5(c).)

F. Inspection and Entry

The Discharger shall allow the Regional Water Quality Control Board, State Water Board, United States Environmental Protection Agency (USEPA), and/or their authorized representatives (including an authorized contractor acting as their representative), upon the presentation of credentials and other documents, as may be required by law, to (40 C.F.R. § 122.41(i);) Wat. Code(§ 13383):

1. Enter upon the Discharger's premises where a regulated facility or activity is located or conducted, or where records are kept under the conditions of this Order (40 C.F.R. § 122.41(i)(1));

2. Have access to and copy, at reasonable times, any records that must be kept under the conditions of this Order (40 C.F.R. § 122.41(i)(2));

3. Inspect and photograph, at reasonable times, any facilities, equipment (including monitoring and control equipment), practices, or operations regulated or required under this Order (40 C.F.R. § 122.41(i)(3));

4. Sample or monitor, at reasonable times, for the purposes of assuring Order compliance or as otherwise authorized by the CWA or the Water Code, any substances or parameters at any location. (40 C.F.R. § 122.41(i)(4).)

G. Bypass

1. Definitions

   a. “Bypass” means the intentional diversion of waste streams from any portion of a treatment facility. (40 C.F.R. § 122.41(m)(1)(i).)

   b. “Severe property damage” means substantial physical damage to property, damage to the treatment facilities, which causes them to become inoperable, or substantial and permanent loss of natural resources that can reasonably be expected to occur in the absence of a bypass. Severe property damage does not mean economic loss caused by delays in production. (40 C.F.R. § 122.41(m)(1)(ii)

2. Bypass not exceeding limitations. The Discharger may allow any bypass to occur which does not cause exceedances of effluent limitations, but only if it is for essential maintenance to assure efficient operation. These bypasses are not subject to the provisions listed in Standard Provisions – Permit Compliance I.G.3, I.G.4, and I.G.5 below. (40 C.F.R. § 122.41(m)(2).)

3. Prohibition of bypass. Bypass is prohibited, and the Regional Water Board may take enforcement action against a Discharger for bypass, unless (40 C.F.R. § 122.41(m)(4)(i)):

    a. Bypass was unavoidable to prevent loss of life, personal injury, or severe property damage (40 C.F.R. § 122.41 (m)(4)(i)(A));

    b. There were no feasible alternatives to the bypass, such as the use of auxiliary treatment facilities, retention of untreated wastes, or maintenance during normal periods of equipment downtime. This condition is not satisfied if adequate back-up equipment should have been installed in the exercise of reasonable engineering judgment to prevent a bypass that occurred during normal periods of equipment downtime or preventive maintenance (40 C.F.R. § 122.41(m)(4)(i)(B)); and

    c. The Discharger submitted notice to the Regional Water Board as required under Standard Provision – Permit Compliance I.G.5 below. (40 C.F.R. § 122.41(m)(4)(i)(C).)

4. The Regional Water Board may approve an anticipated bypass, after considering its adverse effects, if the Regional Water Board determines that it will meet the three conditions listed in Standard Provisions – Permit Compliance I.G.3 above. (40 C.F.R. § 122.41(m)(4)(ii).)

5. Notice

    a. Anticipated bypass. If the Discharger knows in advance of the need for a bypass, it shall submit a notice, if possible at least 10 days before the date of the bypass. (40 C.F.R. § 122.41(m)(3)(i).)

    b. Unanticipated bypass. The Discharger shall submit notice of an unanticipated bypass as required in Standard Provisions - Reporting V.E below (24-hour notice). (40 C.F.R. § 122.41(m)(3)(ii).)

H. Upset

Upset means an exceptional incident in which there is unintentional and temporary noncompliance with technology based permit effluent limitations because of factors beyond the reasonable control of the Discharger. An upset does not include noncompliance to the extent caused by operational error, improperly designed treatment facilities, inadequate treatment facilities, lack of preventive maintenance, or careless or improper operation. (40 C.F.R. § 122.41(n)(1).)

1. Effect of an upset. An upset constitutes an affirmative defense to an action brought for noncompliance with such technology based permit effluent limitations if the requirements of Standard Provisions – Permit Compliance I.H.2 below are met. No determination made during administrative review of claims that noncompliance was caused by upset, and before an action for noncompliance, is final administrative action subject to judicial review. (40 C.F.R. § 122.41(n)(2).)

2. Conditions necessary for a demonstration of upset. A Discharger who wishes to establish the affirmative defense of upset shall demonstrate, through properly signed, contemporaneous operating logs or other relevant evidence that (40 C.F.R. § 122.41(n)(3)):

   a. An upset occurred and that the Discharger can identify the cause(s) of the upset)(40 C.F.R. § 122.41(n)(3)(i));

   b. The permitted facility was, at the time, being properly operated (40 C.F.R. § 122.41(n)(3)(ii));

   c. The Discharger submitted notice of the upset as required in Standard Provisions – Reporting V.E.2.b below (24-hour notice) (40 C.F.R. § 122.41(n)(3)(iii)); and

   d. The Discharger complied with any remedial measures required under Standard Provisions – Permit Compliance I.C above. (40 C.F.R. § 122.41(n)(3)(iv).)

3. Burden of proof. In any enforcement proceeding, the Discharger seeking to establish the occurrence of an upset has the burden of proof. (40 C.F.R. § 122.41(n)(4).)

II. STANDARD PROVISIONS – PERMIT ACTION

A. General

This Order may be modified, revoked and reissued, or terminated for cause. The filing of a request by the Discharger for modification, revocation and reissuance, or

termination, or a notification of planned changes or anticipated noncompliance does not stay any Order condition. (40 C.F.R. § 122.41(f).)

B. Duty to Reapply

If the Discharger wishes to continue an activity regulated by this Order after the expiration date of this Order, the Discharger must apply for and obtain a new permit. (40 C.F.R. § 122.41(b).)

C. Transfers

This Order is not transferable to any person except after notice to the Regional Water Board. The Regional Water Board may require modification or revocation and reissuance of the Order to change the name of the Discharger and incorporate such other requirements as may be necessary under the CWA and the Water Code. (40 C.F.R. § 122.41(l)(3);)(§122.61).)

III. STANDARD PROVISIONS – MONITORING

A. Samples and measurements taken for the purpose of monitoring shall be representative of the monitored activity. (40 C.F.R. § 122.41(j)(1).)

B. Monitoring results must be conducted according to test procedures under Part 136 or, in the case of sludge use or disposal, approved under Part 136 unless otherwise specified in Part 503 unless other test procedures have been specified in this Order. (40 C.F.R. §122.41(j)(4); § 122.44(i)(1)(iv).)

IV. STANDARD PROVISIONS – RECORDS

A. Except for records of monitoring information required by this Order related to the Discharger's sewage sludge use and disposal activities, which shall be retained for a period of at least five years (or longer as required by Part 503), the Discharger shall retain records of all monitoring information, including all calibration and maintenance records and all original strip chart recordings for continuous monitoring instrumentation, copies of all reports required by this Order, and records of all data used to complete the application for this Order, for a period of at least three (3) years from the date of the sample, measurement, report or application. This period may be extended by request of the Regional Water Board Executive Officer at any time. (40 C.F.R. § 122.41(j)(2).)

B. Records of monitoring information shall include:

1. The date, exact place, and time of sampling or measurements (40 C.F.R. § 122.41(j)(3)(i));

2. The individual(s) who performed the sampling or measurements (40 C.F.R. § 122.41(j)(3)(ii));

3. The date(s) analyses were performed (40 C.F.R. § 122.41(j)(3)(iii));

4. The individual(s) who performed the analyses (40 C.F.R. § 122.41(j)(3)(iv));

5. The analytical techniques or methods used (40 C.F.R. § 122.41(j)(3)(v)); and

6. The results of such analyses. (40 C.F.R. § 122.41(j)(3)(vi).)

C. Claims of confidentiality for the following information will be denied (40 C.F.R. § 122.7(b)):

1. The name and address of any permit applicant or Discharger (40 C.F.R. § 122.7(b)(1)); and

2. Permit applications and attachments, permits and effluent data. (40 C.F.R. § 122.7(b)(2).)

V. STANDARD PROVISIONS – REPORTING

A. Duty to Provide Information

The Discharger shall furnish to the Regional Water Board, State Water Board, or USEPA within a reasonable time, any information which the Regional Water Board, State Water Board, or USEPA may request to determine whether cause exists for modifying, revoking and reissuing, or terminating this Order or to determine compliance with this Order. Upon request, the Discharger shall also furnish to the Regional Water Board, State Water Board, or USEPA copies of records required to be kept by this Order. (40 C.F.R. § 122.41(h); Water Code §13267.)

B. Signatory and Certification Requirements

1. All applications, reports, or information submitted to the Regional Water Board, State Water Board, and/or USEPA shall be signed and certified in accordance with Standard Provisions – Reporting V.B.2, V.B.3, V.B.4, and V.B.5 below. (40 C.F.R. § 122.41(k).)

2. All permit applications shall be signed by a responsible corporate officer. For the purpose of this section, a responsible corporate officer means: (i) A president, secretary, treasurer, or vice-president of the corporation in charge of a principal business function, or any other person who performs similar policy- or decision-making functions for the corporation, or (ii) the manager of one or more manufacturing, production, or operating facilities, provided, the manager is authorized to make management decisions which govern the operation of the

regulated facility including having the explicit or implicit duty of making major capital investment recommendations, and initiating and directing other comprehensive measures to assure long term environmental compliance with environmental laws and regulations; the manager can ensure that the necessary systems are established or actions taken to gather complete and accurate information for permit application requirements; and where authority to sign documents has been assigned or delegated to the manager in accordance with corporate procedures. (40 C.F.R. § 122.22(a)(1).)

3. All reports required by this Order and other information requested by the Regional Water Board, State Water Board, or USEPA shall be signed by a person described in Standard Provisions – Reporting V.B.2 above, or by a duly authorized representative of that person. A person is a duly authorized representative only if:

    a. The authorization is made in writing by a person described in Standard Provisions – Reporting V.B.2 above (40 C.F.R. § 122.22(b)(1));

    b. The authorization specified either an individual or a position having responsibility for the overall operation of the regulated facility or activity such as the position of plant manager, operator of a well or a well field, superintendent, position of equivalent responsibility, or an individual or position having overall responsibility for environmental matters for the company. (A duly authorized representative may thus be either a named individual or any individual occupying a named position.) (40 C.F.R. § 122.22(b)(2)); and

    c. The written authorization is submitted to the Regional Water Board, and State Water Board. (40 C.F.R. § 122.22(b)(3).)

4. If an authorization under Standard Provisions – Reporting V.B.3 above is no longer accurate because a different individual or position has responsibility for the overall operation of the facility, a new authorization satisfying the requirements of Standard Provisions – Reporting V.B.3 above must be submitted to the Regional Water Board, and State Water Board prior to or together with any reports, information, or applications, to be signed by an authorized representative. (40 C.F.R. § 122.22(c).)

5. Any person signing a document under Standard Provisions – Reporting V.B.2 or V.B.3 above shall make the following certification:

"I certify under penalty of law that this document and all attachments were prepared under my direction or supervision in accordance with a system designed to assure that qualified personnel properly gather and evaluate the information submitted. Based on my inquiry of the person or persons who manage the system or those persons directly responsible for gathering the information, the information submitted is, to the best of my knowledge and belief, true, accurate, and complete. I am aware that there are significant penalties for submitting false information, including the possibility of fine and imprisonment for knowing violations." (40 C.F.R. § 122.22(d).)

C. Monitoring Reports

1. Monitoring results shall be reported at the intervals specified in the Monitoring and Reporting Program (Attachment E) in this Order. (40 C.F.R. § 122.41(l)(4).)

2. Monitoring results must be reported on a Discharge Monitoring Report (DMR) form or forms provided or specified by the Regional Water Board or State Water Board for reporting results of monitoring of sludge use or disposal practices. (40 C.F.R. § 122.41(l)(4)(i).)

3. If the Discharger monitors any pollutant more frequently than required by this Order using test procedures approved under Part 136 or, in the case of sludge use or disposal, approved under Part 136 unless otherwise specified in Part 503, or as specified in this Order, the results of this monitoring shall be included in the calculation and reporting of the data submitted in the DMR or sludge reporting form specified by the Regional Water Board. (40 C.F.R. § 122.41(l)(4)(ii).)

4. Calculations for all limitations, which require averaging of measurements, shall utilize an arithmetic mean unless otherwise specified in this Order. (40 C.F.R. § 122.41(l)(4)(iii).)

D. Compliance Schedules

Reports of compliance or noncompliance with, or any progress reports on, interim and final requirements contained in any compliance schedule of this Order, shall be submitted no later than 14 days following each schedule date. (40 C.F.R. § 122.41(l)(5).)

E. Twenty-Four Hour Reporting

1. The Discharger shall report any noncompliance that may endanger health or the environment. Any information shall be provided orally within 24 hours from the time the Discharger becomes aware of the circumstances. A written submission shall also be provided within five (5) days of the time the Discharger becomes aware of the circumstances. The written submission shall contain a description of the noncompliance and its cause; the period of noncompliance, including exact dates and times, and if the noncompliance has not been corrected, the anticipated time it is expected to continue; and steps taken or planned to reduce, eliminate, and prevent reoccurrence of the noncompliance. (40 C.F.R. § 122.41(l)(6)(i).)

2. The following shall be included as information that must be reported within 24 hours under this paragraph (40 C.F.R. § 122.41(l)(6)(ii):

   a. Any unanticipated bypass that exceeds any effluent limitation in this Order. (40 C.F.R. § 122.41(l)(6)(ii)(A).)

   b. Any upset that exceeds any effluent limitation in this Order. (40 C.F.R. § 122.41(l)(6)(ii)(B).)

3. The Regional Water Board may waive the above-required written report under this provision on a case-by-case basis if an oral report has been received within 24 hours. (40 C.F.R. § 122.41(l)(6)(iii).)

F. Planned Changes

The Discharger shall give notice to the Regional Water Board as soon as possible of any planned physical alterations or additions to the permitted facility. Notice is required under this provision only when (40 C.F.R. § 122.41(l)(1):

1. The alteration or addition to a permitted facility may meet one of the criteria for determining whether a facility is a new source in section 122.29(b) (40 C.F.R. § 122.41(l)(1)(i); or

2. The alteration or addition could significantly change the nature or increase the quantity of pollutants discharged. This notification applies to pollutants which are subject neither to effluent limitations in this Order nor to notification requirements under section 122.42(a)(1) (see Additional Provisions—Notification Levels VII.A.1). (40 C.F.R. § 122.41(l)(1)(ii).)

3. The alteration or addition results in a significant change in the Discharger's sludge use or disposal practices, and such alteration, addition, or change may justify the application of permit conditions that are different from or absent in the existing

permit, including notification of additional use or disposal sites not reported during the permit application process or not reported pursuant to an approved land application plan. (40 C.F.R. § 122.41(l)(1)(iii).)

G. Anticipated Noncompliance

The Discharger shall give advance notice to the Regional Water Board or State Water Board of any planned changes in the permitted facility or activity that may result in noncompliance with General Order requirements. (40 C.F.R. § 122.41(l)(2).)

H. Other Noncompliance

The Discharger shall report all instances of noncompliance not reported under Standard Provisions – Reporting V.C, V.D, and V.E above at the time monitoring reports are submitted. The reports shall contain the information listed in Standard Provision – Reporting V.E above. (40 C.F.R. § 122.41(l)(7).)

I. Other Information

When the Discharger becomes aware that it failed to submit any relevant facts in a permit application, or submitted incorrect information in a permit application or in any report to the Regional Water Board, State Water Board, or USEPA, the Discharger shall promptly submit such facts or information. (40 C.F.R. § 122.41(l)(8).)

VI. STANDARD PROVISIONS – ENFORCEMENT

A. The Regional Water Board is authorized to enforce the terms of this permit under several provisions of the Water Code, including, but not limited to, sections 13385, 13386, and 13387

VII. ADDITIONAL PROVISIONS – NOTIFICATION LEVELS

A. Non-Municipal Facilities

Existing manufacturing, commercial, mining, and silvicultural Dischargers shall notify the Regional Water Board as soon as they know or have reason to believe (40 C.F.R. § 122.42(a)):

1. That any activity has occurred or will occur that would result in the discharge, on a routine or frequent basis, of any toxic pollutant that is not limited in this Order, if that discharge will exceed the highest of the following "notification levels" (40 C.F.R. § 122.42(a)(1)):

    a. 100 micrograms per liter (µg/L) (40 C.F.R. § 122.42(a)(1)(i));

    b. 200 µg/L for acrolein and acrylonitrile; 500 µg/L for 2,4-dinitrophenol and 2-methyl-4,6-dinitrophenol; and 1 milligram per liter (mg/L) for antimony (40 C.F.R. § 122.42(a)(1)(ii));

    c. Five (5) times the maximum concentration value reported for that pollutant in the Report of Waste Discharge (40 C.F.R. § 122.42(a)(1)(iii)); or

    d. The level established by the Regional Water Board in accordance with section 122.44(f). (40 C.F.R. § 122.42(a)(1)(iv).)

2. That any activity has occurred or will occur that would result in the discharge, on a non-routine or infrequent basis, of any toxic pollutant that is not limited in this Order, if that discharge will exceed the highest of the following “notification levels" (40 C.F.R. § 122.42(a)(2)):

    a. 500 micrograms per liter (µg/L) (40 C.F.R. § 122.42(a)(2)(i));

    b. 1 milligram per liter (mg/L) for antimony (40 C.F.R. § 122.42(a)(2)(ii));

    c. Ten (10) times the maximum concentration value reported for that pollutant in the Report of Waste Discharge (40 C.F.R. § 122.42(a)(2)(iii)); or

    d. The level established by the Regional Water Board in accordance with section 122.44(f). (40 C.F.R. § 122.42(a)(2)(iv).)

ATTACHMENT E – MONITORING AND REPORTING PROGRAM

Table of Contents

I. General Monitoring Provisions E-2
  A. General Monitoring Provision E-2
  B. Laboratory Certification E-4
II. Monitoring Locations E-4
III. Influent Monitoring Requirements E-5
  A. Monitoring Location M-INF E-5
IV. Effluent Monitoring Requirements E-7
  A. Effluent Monitoring Location M-001 ..... E-7
V. Whole Effluent Toxicity Testing Requirements E-10
  A. Toxicity Monitoring Requirements E-10
VI. Land Discharge Monitoring Requirements - N/A E-14
VII. Reclamation Monitoring Requirements - N/A E-14
VIII. Receiving Water Monitoring Requirements E-14
  A. Monitoring Locations of Pacific Ocean E-14
IX. Other Monitoring Requirements E-15
  A. Storm Water Monitoring and Reporting E-15
X. Reporting Requirements E-15
  A. General Monitoring and Reporting Requirements E-15
  B. Self Monitoring Reports (SMRs) E-15
  C. Discharge Monitoring Reports (DMRs) E-18
  D. Other Reports E-19

List of Tables

Table E-1. Facility Monitoring Station Locations E-4
Table E-2. Receiving Water Monitoring Station Locations E-5
Table E-3. Influent Monitoring at M-INF E-6
Table E-4. Effluent Monitoring at M-001 ..... E-7
Table E-5. Monitoring Periods and Reporting Schedule E-16
Table E-6. Monitoring Reporting Submittal E-19

List of Figures

Figure E-1. Map of Receiving Water Monitoring Stations Locations E-20

ATTACHMENT E – MONITORING AND REPORTING PROGRAM (MRP)

The Code of Federal Regulations (40 CFR 122.48) requires that all NPDES permits specify monitoring and reporting requirements. California Water Code Sections 13267 and 13383 also authorize the Regional Water Quality Control Board to require technical and monitoring reports. This MRP establishes monitoring and reporting requirements, which implement the federal and California regulations.

I. GENERAL MONITORING PROVISIONS

A. General Monitoring Provision

1. All sampling and sample preservation shall be in accordance with the current edition of “Standard Methods for the Examination of Water and Wastewater” (American Public Health Association) or 40 CFR 136. (revised as of April 11, 2007) "Guidelines Establishing Test Procedures for the Analysis of Pollutants," promulgated by the United States Environmental Protection Agency (EPA).

2. All laboratory analyses shall be performed in accordance with test procedures under 40 CFR 136 (revised as of April 11, 2007) "Guidelines Establishing Test Procedures for the Analysis of Pollutants," promulgated by the United States Environmental Protection Agency (EPA), unless otherwise specified in this MRP. In addition, the Regional Water Board and/or EPA, at their discretion, may specify test methods that are more sensitive than those specified in 40 CFR 136.

3. Chemical, bacteriological, and bioassay analyses shall be conducted at a laboratory certified for such analyses by the California Department of Public Health in accordance with the provision of Water Code Section 13176, or conducted at a laboratory certified for such analyses by the EPA or at laboratories approved by the Regional Water Board's Executive Officer.

4. Whenever the Discharger monitors any pollutant more frequently than is required by this Order, the results of this monitoring shall be included in the calculation and reporting of the data submitted in the discharge monitoring report specified by the Executive Officer.

5. For effluent and ambient receiving water monitoring:

   a. The Discharger shall submit to the Regional Water Board reports necessary to determine compliance with effluent limitations for priority pollutants in this Order and shall follow the chemical nomenclature and sequential order of constituents shown in Table B of the Ocean Plan. The Discharger shall report with each sample result:

      1) The reporting level achieved by the testing laboratory; and
      2) The laboratory’s current MDL, as determined by the procedure found in 40 CFR 136 (revised as of May 14, 1999).

6. All analytical data shall be reported with identification of practical quantitation levels and with method detection limits, as determined by the procedure found in 40 CFR 136 (revised as of May 14, 1999).

7. The Discharger shall have and implement an acceptable written quality assurance (QA) plan for laboratory analyses. Duplicate chemical analyses must be conducted on a minimum of ten percent (10%) of the samples, or at least one sample per month, whichever is greater. A similar frequency shall be maintained for analyzing spiked samples. When requested by the Regional Water Board or EPA, the Discharger will participate in the NPDES discharge monitoring report QA performance study.

8. For every item of monitoring data where the requirements are not met, the monitoring report shall include a statement discussing the reasons for noncompliance, the actions undertaken or proposed that will bring the discharge into full compliance with requirements at the earliest time, and an estimate of the date when the Discharger will be in compliance. The Discharger shall notify the Regional Water Board by letter when compliance with the time schedule has been achieved.

9. The Discharger shall assure that records of all monitoring information are maintained and accessible for a period of at least five years from the date of the sample, report, or application. This period of retention shall be extended during the course of any unresolved litigation regarding this discharge or by the request of the Regional Water Board at any time. Records of monitoring information shall include:

    a. The information listed in Attachment D - IV Standard Provisions – Records, subparagraph B. of this Order;
    b. The laboratory which performed the analyses;
    c. The date(s) analyses were performed;
    d. The individual(s) who performed the analyses;
    e. The modification(s) to analytical techniques or methods used;
    f. All sampling and analytical results, including
        (1) Units of measurement used;
        (2) Minimum reporting level for the analysis (minimum level);
        (3) Results less than the reporting level but above the method detection limit (MDL);
        (4) Data qualifiers and a description of the qualifiers;
        (5) Quality control test results (and a written copy of the laboratory quality assurance plan);
        (6) Dilution factors, if used; and
        (7) Sample matrix type.
    g. All monitoring equipment calibration and maintenance records;
    h. All original strip charts from continuous monitoring devices;
    i. All data used to complete the application for this Order; and,
    j. Copies of all reports required by this Order.
    k. Electronic data and information generated by the Supervisory Control And Data Acquisition (SCADA) System.

10. The flow measurement system shall be calibrated at least once per year or more frequently, to ensure continued accuracy.

11. Monitoring and reporting shall be in accordance with the following:

    a. Samples and measurements taken for the purpose of monitoring shall be representative of the monitored activity.
    b. The monitoring and reporting of influent, effluent, and sludge shall be done more frequently as necessary to maintain compliance with this Order and or as specified in this order.
    c. Whenever the Discharger monitors any pollutant more frequently than is required by this Order, the results of this monitoring shall be included in the calculation and reporting of the data submitted in the discharge monitoring report specified by the Executive Officer.
    d. A "grab" sample is defined as any individual sample collected in less than 15 minutes.
    e. A composite sample is defined as a combination of no fewer than eight individual grab samples obtained over the specified sampling period. The volume of each individual grab sample shall be proportional to the discharge flow rate at the time of sampling. The compositing period shall equal the specific sampling period, or 24 hours, if no period is specified.

B. Laboratory Certification

Laboratories analyzing monitoring samples shall be certified by the California Department of Public Health, in accordance with the provision of Water Code section 13176, and must include quality assurance/quality control data with their reports.

II. MONITORING LOCATIONS

The Discharger shall establish the following monitoring locations to demonstrate compliance with the effluent limitations, discharge specifications, and other requirements in this Order:

Table E-1. Facility Monitoring Station Locations

Discharge Point Name	Monitoring Location Name	Monitoring Location Description	Latitude and Longitude
001	M-INF	AES effluent intake to the desalination facility	33º 38’ 39”N, 117°58' 43"W
001	M-001	Facility discharge to AES discharge pipeline to Pacific Ocean	33º 38’ 38”N, 117°58' 44"W

Table E-2. Receiving Water Monitoring Station Locations

Monitoring Location Name	Monitoring Location Description	Latitude & Longitude	Depth (ft)
A-1	10,000 feet southeast of the AES outfall tower (perpendicular to the outfall) 1,500 ft offshore	33º 37’ 30”N, 117°57' 38"W	Surface
A-2	10,000 feet southeast of the AES outfall tower (perpendicular to the outfall) 1,500 ft offshore	33º 37’ 30”N, 117°57' 38"W	Bottom
B-1	1,000 feet southeast of the AES outfall tower (perpendicular to the outfall) 1,500 ft offshore	33º 38’ 12”N, 117°58' 55"W	Surface
B-2	1,000 feet southeast of the AES outfall tower (perpendicular to the outfall) 1,500 ft offshore	33º 38’ 12”N, 117°58' 55"W	Bottom
C-1	450 feet southeast of the AES outfall tower (perpendicular to the outfall) 1,500 ft offshore	33º 38’ 18”N, 117°58' 55"W	Surface
C-2	450 feet southeast of the AES outfall tower (perpendicular to the outfall) 1,500 ft offshore	33º 38’ 18”N, 117°58' 55"W	15 feet below Surface
C-3	450 feet southeast of the AES outfall tower (perpendicular to the outfall) 1,500 ft offshore	33º 38’ 18”N, 117°58' 55"W	Bottom
D-1	450 feet southeast of the AES outfall (perpendicular to the outfall) 100 ft offshore	33º 38’ 23”N, 117°58' 50"W	Surface
D-2	450 feet southeast of the AES outfall (perpendicular to the outfall) 100 ft offshore	33º 38’ 23”N, 117°58' 50"W	Bottom
E-1	1,000 feet northeast of the AES outfall tower (perpendicular to the outfall) 1,500 ft offshore	33º 38’ 26”N, 117°59' 07"W	Surface
E-2	1,000 feet northeast of the AES outfall tower (perpendicular to the outfall) 1,500 ft offshore	33º 38’ 26”N, 117°59' 07"W	Bottom

III. INFLUENT MONITORING REQUIREMENTS

A. Monitoring Location M-INF

1. The Discharger shall sample and monitor the influent to the Facility, at the influent monitoring location[1], as follows. Except for flow, monitoring results from the AES – HBGS discharge monitoring may be used to comply with this requirement:

[1] *AES effluent intake to the desalination facility.*

Table E-3. Influent Monitoring at M-INF

Parameter	Units	Sample Type	Minimum Sampling Frequency	Required Analytical Test Method
Flow	mgd	Recorder / Totalizer	Continuous	--
Oil & Grease	mg/L	Grab	Monthly	--
Total Residual Chlorine	mg/L	Grab	"	--
Temperature	°F	Grab	"	See Section I.A.2 & 3, above, of this MRP
pH	pH units	Grab	"	"
Ammonia-Nitrogen	mg/L	"	Semiannually	"
Arsenic	µg/L	"	"	"
Cadmium	"	"	"	"
Chromium (Hexavalent)	"	"	"	"
Copper	"	"	"	"
Lead	"	"	"	"
Mercury	"	"	"	"
Nickel	"	"	"	"
Silver	"	"	"	"
Zinc	"	"	"	"
Cyanide	"	"	"	"
Iron	"	"	"	"
Phenolic Compounds (non-chlorinated)	"	"	"	See Section I.A.3. above, of this MRP
Chlorinated Phenolics	"	"	"	See Section I.A.2. above, of this MRP
HCH[2]	"	"	"	"

[2] *HCH shall mean the sum of the alpha, beta, gamma (lindane) and delta isomers of hexachlorocyclohexane.*

IV. EFFLUENT MONITORING REQUIREMENTS

A. Effluent Monitoring Location M-001

1. The Discharger shall monitor DP-001 at monitoring Station M-001, as follows. If more than one analytical test method is listed for a given parameter, the Discharger must select from the listed methods and corresponding Minimum Level specified in Attachment G.

Table E-4. Effluent Monitoring at M-001

Parameter	Units	Sample Type	Minimum Sampling Frequency	Required Analytical Test Method and Minimum Level
Flow	mgd	Recorder/ Totalizer	Continuous	See Section I.A.2., above
Total Residual Chlorine	mg/L	Recorder	"	"
Temperature	°F	Recorder	Continuous (see IV.A.2., below)	"
pH	pH units	Grab	Weekly	"
Ammonia-Nitrogen	mg/L	"	"	"
Oil & Grease	"	"	"	"
Total suspended solids	"	"	"	"
Salinity	ppt	"	"	"
Arsenic	µg/L	"	Quarterly	"
Cadmium	"	"	"	"
Chromium (Hexavalent)	"	"	"	"
Copper	"	"	"	"
Lead	"	"	"	"
Mercury	"	"	"	"
Nickel	"	"	"	"
Silver	"	"	"	"
Zinc	"	"	"	"
Cyanide	"	"	"	"
Iron	"	"	"	"
Phenolic Compounds (non-chlorinated)	"	"	"	"
Chlorinated Phenolics	"	"	"	"
HCH	"	"	"	"
Toxicity	TUc	(See Section V, Below)	(See Section V, below)	"
Antimony	µg/L	Grab	Annually (See A.3., below)	"
Beryllium	"	"	"	"
Chromium (III)	"	"	"	"
Selenium	"	"	"	"
Thallium	"	"	"	"
2,3,7,8-Tetrachlorodibenzo-P-Dioxin (TCDD)	"	"	"	"
Acrolein	"	"	"	"
Acrylonitrile	"	"	"	"

Table E-4. Effluent Monitoring at M-001

Parameter	Units	Sample Type	Minimum Sampling Frequency	Required Analytical Test Method and Minimum Level
Benzene	"	"	"	"
Bromoform	µg/L	Grab	Annually (See A.3., below)	See Section I.A.2., above
Carbon Tetrachloride	"	"	"	"
Chlorobenzene	"	"	"	"
Chlorodibromomethane	"	"	"	"
Chloroethane	"	"	"	"
2-Chloroethyl Vinyl Ether	"	"	"	"
Chloroform	"	"	"	"
Dichlorobromomethane	"	"	"	"
1,1-Dichloroethane	"	"	"	"
1,2-Dichloroethane	"	"	"	"
1,1-Dichloroethylene	"	"	"	"
1,2-Dichloropropane	"	"	"	"
1,3-Dichloropropylene	"	"	"	"
Ethylbenzene	"	"	"	"
Methyl Bromide	"	"	"	"
Methyl Chloride	"	"	"	"
Methylene Chloride	"	"	"	"
1,1,2,2-Tetrachloroethane	“	“	“	“
Tetrachloroethylene	"	"	"	"
Toluene	"	"	"	"
1,2-Trans-Dichloroethylene	"	"	"	"
1,1,1-Trichloroethane	"	"	"	"
1,1,2-Trichloroethane	"	"	"	"
Trichloroethylene	"	"	"	"
Vinyl Chloride	"	"	"	"
3-Methyl-4-Chlorophenol	"	"	"	"
Acenaphthene	"	"	"	"
Acenaphthylene	"	"	"	"
Anthracene	"	"	"	"
Benzidine	"	"	"	"
Benzo (a) Anthracene	"	"	"	"
Benzo (a) Pyrene	"	"	"	"
Benzo (b) Fluoranthene	"	"	"	"
Benzo (g,h,i) Perylene	"	"	"	"
Benzo (k) Fluoranthene	"	"	"	"
Bis (2-Chloroethoxy) Methane	"	"	"	"
Bis (2-Chloroethyl) Ether	"	"	"	"
Bis (2-Chloroisopropyl) Ether	"	"	"	"
Bis (2-Ethylhexyl) Phthalate	"	"	"	"
4-Bromophenyl Phenyl Ether	"	"	"	"
Butylbenzyl Phthalate	"	"	"	"
2-Chloronaphthalene	"	"	"	"
4-Chlorophenyl Phenyl	"	"	"	"

Table E-4. Effluent Monitoring at M-001

Parameter	Units	Sample Type	Minimum Sampling Frequency	Required Analytical Test Method and Minimum Level
Ether				
Chrysene	µg/L	Grab	Annually (See A.3., below)	See Section I.A.2., above
Dibenzo (a,h) Anthracene	"	"	"	"
1,2-Dichlorobenzene	"	"	"	"
1,3-Dichlorobenzene	"	"	"	"
1,4-Dichlorobenzene	"	"	"	"
3,3'-Dichlorobenzidine	"	"	"	"
Diethyl Phthalate	"	"	"	"
Dimethyl Phthalate	"	"	"	"
Di-n-Butyl Phthalate	"	"	"	"
2,4-Dinitrotoluene	"	"	"	"
2-6-Dinitrotoluene	"	"	"	"
Di-n-Octyl Phthalate	"	"	"	"
1,2-Dipenylhydrazine	"	"	"	"
Fluoranthene	"	"	"	"
Fluorene	"	"	"	"
Hexachlorobenzene	"	"	"	"
Hexachlorobutadiene	"	"	"	"
Hexachlorocyclopentadien	"	"	"	"
Hexachloroethane	"	"	"	"
Indeno (1,2,3-cd) Pyrene	"	"	"	"
Isophorone	"	"	"	"
Naphthalene	"	"	"	"
Nitrobenzene	"	"	"	"
N-Nitrosodimethylamine	"	"	"	"
N-Nitrosodi-N-Propylamine	"	"	"	"
N-Nitrosodiphenylamine	"	"	"	"
Phenanthrene	"	"	"	"
Pyrene	"	"	"	"
1,2,4-Trichlorobenzene	"	"	"	"
Aldrin	"	"	"	"
Chlordane	"	"	"	"
4, 4' - DDT	"	"	"	"
4, 4' - DDE	"	"	"	"
4, 4' - DDD	"	"	"	"
Dieldrin	"	"	"	"
Alpha Endosulfan	"	"	"	"
Beta Endosulfan	"	"	"	"
Endosulfan Sulfate	"	"	"	"
Endrin	"	"	"	"
Endrin Aldehyde	"	"	"	"
Heptachlor	"	"	"	"
Heptachlor Epoxide	"	"	"	"
PCB 1016	"	"	"	"
PCB 1221	"	"	"	"
PCB 1232	"	"	"	"
PCB 1242	"	"	"	"
PCB 1248	"	"	"	"
PCB 1254	"	"		"

Table E-4. Effluent Monitoring at M-001

Parameter	Units	Sample Type	Minimum Sampling Frequency	Required Analytical Test Method and Minimum Level
PCB 1260	"	"	"	"
Toxaphene	µg/L	Grab	Annually (See A.3., below)	See Section I.A.2., above

2. Temperature in °F of the waste discharged shall be monitored and recorded continuously. Any increase or changes in temperature shall be recorded in addition to the maximum and minimum temperatures of each 24-hour day.

3. The monitoring frequency for those priority pollutants that are detected during the required annual monitoring at a concentration greater than fifty percent of the most stringent applicable receiving water objectives as specified for that pollutant in the Ocean Plan shall be accelerated to quarterly for one year.

4. At any time a parameter is detected above the maximum daily effluent limitations of the Order, the Discharger shall accelerate the monitoring frequency of that parameter to monthly. If two successive accelerated monitoring results do not indicate the presence of the specific parameter at levels above the maximum daily effluent limitations, the Discharger may return to the regular monitoring frequency. However, if two successive accelerated monitoring results show concentrations of a parameter above the effluent limitations, the Discharger shall conduct/implement a pollutant minimization program and submit a report describing the measures undertaken by the Discharger to prevent the discharge of the pollutant(s) at levels of concern.

5. When there is a discharge of filter backwash water, RO subsequent rinse waste water, and RO system concentrate, the Discharger shall take separate samples and monitor for the constituents listed in IV.A.1, above.

V. WHOLE EFFLUENT TOXICITY TESTING REQUIREMENTS

A. Toxicity Monitoring Requirements

1. Chronic Toxicity Monitoring:

a. Test Species and Methods

The Discharger shall conduct monthly chronic toxicity tests on flow-weighted 24-hour composite effluent samples mixed with ambient seawater in a ratio of 1 to 7.5. The presence of chronic toxicity shall be estimated as specified in *Short Term Methods for Estimating the Chronic Toxicity of Effluents and Receiving Waters to West Coast Marine and Estuarine Organisms* (EPA/600/R-95/136,

1995). Test Organisms specified in Table III-1 of the Ocean Plan shall be used in conducting the tests. If test organisms specified in the West Coast chronic test methods manual are not available, the presence of chronic toxicity shall be estimated as specified in *Short-Term Methods for Estimating the Chronic Toxicity of Effluents and Receiving Waters to Marine and Estuarine Organisms* (EPA 821-R-02-014, 2002).

For the first three months of each successive 27 month period, the Discharger shall conduct monthly chronic toxicity test screening with a marine vertebrate species, a marine invertebrate species, and a marine alga species. For the remaining 24 months of each 27 month period, the discharger shall conduct the monthly chronic toxicity test using only the most sensitive of the three species used in the first three months. The first screening shall be conducted at the start of plant operation. If the most sensitive test species is/are not available during the testing period, the presence of chronic toxicity shall be estimated using the second most sensitive test species from the toxicity test screening conducted for the current 24-month period. Such changes shall be noted on the discharge monitoring report (DMR). Note that a 27 month period is used so that the three month testing period rotates throughout the year over time.

2. Quality Assurance

a. A series of five dilutions and a control shall be tested. The series shall include the instream waste concentration (IWC), two dilutions below the IWC, and two dilutions above the IWC (e.g., 12.5, 25, 50, 75, and 100 percent effluent, where IWC = 50). The chronic IWC for this discharge is 0.55 percent effluent.

b. If test organisms are not cultured in-house, concurrent testing with reference toxicants shall be conducted. If organisms are cultured in-house, monthly testing with reference toxicants shall be conducted. Reference toxicant tests shall be conducted using the same test conditions as effluent toxicity tests (i.e., same test duration, etc.).

c. If either the reference toxicant test or the effluent test does not meet all test acceptability criteria as specified in the test methods manual, then the Discharger must re-sample and re-test within approximately 14 days.

d. Chronic effluent and reference toxicant tests must meet the upper and lower bounds on test sensitivity, as determined by calculating the Percent Minimum Significant Difference (PMSD) for each test result. Test sensitivity bounds are specified in Table 3-6 of *Understanding and Accounting for Method Variability in Whole Effluent Toxicity Applications under the National Pollutant Discharge Elimination System Program* (EPA/833-R-00-003, June 2000). There are five possible outcomes based on the PMSD result:

1) <u>Unqualified Pass</u>: The test's PMSD is within the bounds in Table 3-6 and there is no significant difference between the means for the control and the

IWC treatment. The regulatory authority would conclude that there is no toxicity at the IWC concentration.

2) Unqualified Fail: The test's PMSD is larger than the lower bound (but not greater than the upper bound) in Table 3-6 and there is a significant difference between the means for the control and the IWC treatment. The regulatory authority would conclude that there is toxicity at the IWC concentration.

3) Lacks Test Sensitivity: The test's PMSD exceeds the upper bound in Table 3-6 and there is no significant difference between the means for the control and the IWC treatment. The test is considered invalid. The Discharger must re-sample and re-test within approximately 14 days.

4) Lacks Test Sensitivity: The test's PMSD exceeds the upper bound in Table 3-6 and there is a significant difference between the means for the control and the IWC treatment. The test is considered valid. The regulatory authority would conclude that there is toxicity at the IWC concentration.

5) Very Small but Significant Difference: The relative difference (see Section 6.4.2 of EPA/833-R-00-003) between the means for the control and the IWC treatment is smaller than the lower bound in Table 3-6 and this difference is statistically significant. The test is acceptable. The NOEC is determined as described in Sections 6.4.2 and 6.4.3 of EPA/833-R-00-003.

e. Control and dilution water should be receiving water or lab water, as described in the test methods manual. If dilution water is different from culture water, then a second control using culture water shall also be tested.

3. Additional (Accelerated) Toxicity Testing

a. If toxicity (as defined) is detected, the Discharger shall increase the frequency of chronic toxicity testing to every two weeks whenever any test result exceeds 8.5 TUc. The first test under the accelerated schedule shall be conducted within two weeks of receiving notice of the test that exceeds 8.5 TUc, and every two weeks thereafter. The Discharger may resume the regular test schedule when two consecutive chronic toxicity tests result in 8.5 TUc or less, or when the results of the Initial Investigation Reduction Evaluation conducted by the Discharger have adequately addressed the identified toxicity problem.);
b. However, if implementation of the initial investigation TRE workplan indicates the source of toxicity (e.g., a temporary plant upset), then the Discharger shall conduct only the first accelerated test required above. If toxicity (as defined) is not detected in this first test, the Discharger may return to the normal sampling frequency required herein.
c. If toxicity (as defined) is not detected in the first test required above, then the Discharger may return to the normal sampling frequency required in herein.

4. **Toxicity Reduction Evaluation/Toxicity Identification Evaluation (TRE/TIE)**

   a. If toxicity (as defined) is detected in any of the accelerated monitoring, then, based on an evaluation of the test results and additional available information, the Executive Officer may determine that the Discharger shall initiate a TRE, in accordance with the Discharger's initial investigation TRE workplan and EPA/600/2-88/070 Generalized Methodology for Conducting Industrial Toxicity Reduction Evaluations (TRE's); April 1989). Moreover, the Discharger shall expeditiously develop a detailed TRE workplan which includes:

      1) Further actions to investigate/identify the cause(s) of toxicity;

      2) Actions the Discharger has taken/will take to mitigate the impact of the discharge, to correct the noncompliance, and to prevent the recurrence of toxicity;

      3) An expeditious schedule under which these actions will be implemented.

   b. As part of this TRE process, the Discharger may initiate a TIE using the test methods manuals and TIE Phase I (EPA/600/R-96/054, 1996), Phase II (EPA/600/R-92/080, 1993), and Phase III (EPA/600/R-92/081, 1993) manuals to identify the cause(s) of toxicity.

   c. If a TRE/TIE is initiated prior to completion of the accelerated testing schedule required by Toxicity Requirement, then the accelerated testing schedule may be terminated, or used as necessary in performing the TRE/TIE.

5. **Reporting**

   a. The Discharger shall submit a full report of all toxicity test results, including any toxicity testing required by Toxicity Requirements with the discharge monitoring report (DMR) for the month in which the toxicity tests are conducted. A full report shall consist of: (1) toxicity test results; (2) dates of sample collection and initiation of each toxicity test; (3) chronic toxicity effluent limitations. Toxicity test results shall be reported according to the test methods manual chapter on Report Preparation. It is suggested that the Discharger submit the data on an electronic disk in the Toxicity Standardized Electronic Reporting Form (TSERF) (*Standardized Electronic Reporting Format for Monitoring Effluent Toxicity: October 1994 Format*, State Water Resources Control Board, 1995).

      If the initial investigation TRE workplan is used to determine that additional (accelerated) toxicity testing is unnecessary, these results shall be submitted with the DMR for the month in which investigations conducted under the TRE workplan occurred.

b. Within approximately 14 days of receipt of test results exceeding an chronic toxicity effluent limitation, the Discharger shall provide written notification to the Regional Board of:

1) Findings of the TRE or other investigation to identify the cause(s) of toxicity;

2) Actions the Discharger has taken/will take, to mitigate the impact of the discharge and to prevent the recurrence of toxicity;

3) When corrective actions, including a TRE, have not been *completed*, an expeditious schedule under which corrective actions will be implemented; or

4) The reason for not taking corrective action, if no action has been taken.

VI. LAND DISCHARGE MONITORING REQUIREMENTS - N/A

VII. RECLAMATION MONITORING REQUIREMENTS - N/A

VIII. RECEIVING WATER MONITORING REQUIREMENTS

A. Monitoring Locations of Pacific Ocean

1. Receiving water monitoring in the vicinity of the outfall shall be conducted as specified below and at monitoring stations shown in Table E-2, above, and Figure E-1, Map of Receiving Water Monitoring Stations Locations on page E-20. The receiving water monitoring program may be conducted jointly with other dischargers. During monitoring events, sample stations shall be located, if possible, using a land-based microwave positioning system or a satellite positioning system such as global positioning. If an alternate navigation system is proposed, its accuracy should be compared to that of microwave and satellite based systems, and any compromises in accuracy shall be justified. The monitoring frequency shall be quarterly for the 1st and 5th year of the permit and semiannually during the 2nd, 3rd and fourth year of the permit. The Discharger shall record the date and time of sampling, and a general description of observation made at the sampling location (e.g. windy, sunny, rough sea condition etc).

2. Light Transmittance Monitoring**.** The light transmittance shall be monitored via a Secchi disk at Monitoring Locations A-1, B-1, C-1, D-1 and E-1.

3. Water Quality Monitoring**.** The dissolved oxygen concentration and pH shall be monitored via grab samples at the surface at Monitoring Locations A-1, B-1, C-1, D-1 and E-1. Dissolved oxygen shall be reported as milligrams per liter (mg/L). pH shall be reported as pH Units.

4. Temperature and Salinity Monitoring. Temperature and salinity shall be monitored at all monitoring locations listed in Table 2. Temperature shall be reported in degrees Fahrenheit (°F). Salinity shall be reported in parts per thousand (ppt).

IX. OTHER MONITORING REQUIREMENTS

A. Storm Water Monitoring and Reporting

For storm water discharges, the Discharger shall comply with the monitoring and reporting requirements as outlined in Attachment "D".

X. REPORTING REQUIREMENTS

A. General Monitoring and Reporting Requirements

1. The Discharger shall comply with all Standard Provisions (Attachment D) related to monitoring, reporting, and recordkeeping.

2. By May 1 of each year, the Discharger shall submit an annual report to the Regional Water Board. The annual report shall include the following:

   a. Tabular and graphical summaries of the monitoring data obtained during the previous year;
   b. A discussion of the compliance record and the corrective actions taken or planned, which may be needed to bring the discharge into full compliance with the waste discharge requirements; and
   c. A summary of the quality assurance (QA) activities for the previous year.

3. At any time during the term of this Order when electronic submittal of monitoring reports has become the norm, the State or Regional Water Board may notify the Discharger to discontinue submittal of hard copies of reports. When such notification is given, the Discharger shall stop submitting hard copies of required monitoring reports.

B. Self Monitoring Reports (SMRs)

1. At any time during the term of this permit, the State or Regional Water Board may notify the Discharger to electronically submit Self-Monitoring Reports (SMRs) using the State Water Board's California Integrated Water Quality System (CIWQS) Program Web site (http://www.waterboards.ca.gov/ciwqs/index.html). Until such notification is given, the Discharger shall submit hard copy SMRs. The CIWQS Web site will provide additional directions for SMR submittal in the event there will be service interruption for electronic submittal.

2. The Discharger shall report in the SMR the results for all monitoring specified in this MRP under Sections III through IX. Additionally, the Discharger shall report in the SMR the results of any special studies, acute and chronic toxicity testing, TRE/TIE, PMP, and Pollution Prevention Plan required by Special Provisions – VI.C. of this Order. The Discharger shall submit monthly, quarterly, and annual SMRs including the results of all required monitoring using USEPA-approved test methods or other test methods specified in this Order. If the Discharger monitors any pollutant more frequently than required by this Order, the results of this monitoring shall be included in the calculations and reporting of the data submitted in the SMR.

3. Monitoring periods and reporting for all required monitoring shall be completed according to the following schedule:

Table E-5. Monitoring Periods and Reporting Schedule

Sampling Frequency	Monitoring Period Begins On	Monitoring Period	SMR Due Date
Continuous	The effective day of this Order	All	Submit with monthly SMR
Daily	The effective day of this Order	(Midnight through 11:59 PM) or any 24-hour period that reasonably represents a calendar day for purposes of sampling.	Submit with monthly SMR
Weekly	The effective day of this Order	Sunday through Saturday	Submit with monthly SMR
Monthly	First day of calendar month following permit effective date or on permit date if that date is first day of the month	1st day of calendar month through last day of calendar month	First day of the second month following the reporting period, submit as monthly SMR
Quarterly[3]	Closest of January 1, April 1, July 1, or October 1 following permit effective date	January 1 through March 31, samples are collected in January; April 1 through June 30; samples are collected in April; July 1 through September 30; samples are collected in July; October 1 through December 31; samples are collected in October	First day of the second month following the reporting period, submit with monthly SMR
Semi-annually	Closest of January 1 or July 1 following permit effective date	January 1 through June 30, samples are collected in January. July 1 through December 31, samples are collected in July.	first day of the second month following the reporting period, submit with monthly SMR
Annually	The effective day of this Order	January 1 through December 31, see Table 1.	May 1 each year including report requirements in Attachments

4. Reporting Protocols. The Discharger shall report with each sample result the applicable reported Minimum Level (ML) and the current Method Detection Limit (MDL), as determined by the procedure in Part 136.

[3] *Quarterly monitoring result for certain constituents may be used to satisfy the annual monitoring for the same constituents.*

The Discharger shall report the results of analytical determinations for the presence of chemical constituents in a sample using the following reporting protocols:

a. Sample results greater than or equal to the reported ML shall be reported as measured by the laboratory (i.e., the measured chemical concentration in the sample).

b. Sample results less than the RL, but greater than or equal to the laboratory's MDL, shall be reported as "Detected, but Not Quantified," or DNQ. The estimated chemical concentration of the sample shall also be reported.

c. For the purposes of data collection, the laboratory shall write the estimated chemical concentration next to DNQ as well as the words "Estimated Concentration" (may be shortened to "Est. Conc."). The laboratory may, if such information is available, include numerical estimates of the data quality for the reported result. Numerical estimates of data quality may be percent accuracy (+ a percentage of the reported value), numerical ranges (low to high), or any other means considered appropriate by the laboratory.

d. Sample results less than the laboratory's MDL shall be reported as "Not Detected," or ND.

e. Dischargers are to instruct laboratories to establish calibration standards so that the ML value (or its equivalent if there is differential treatment of samples relative to calibration standards) is the lowest calibration standard. At no time is the Discharger to use analytical data derived from extrapolation beyond the lowest point of the calibration curve.

5. The Discharger shall submit SMRs in accordance with the following requirements:

a. The Discharger shall arrange all reported data in a tabular format. The data shall be summarized to clearly illustrate whether the facility is operating in compliance with interim and/or final effluent limitations. The Discharger is not required to duplicate the submittal of data that is entered in a tabular format within CIWQS. When electronic submittal of data is required and CIWQS does not provide for entry into a tabular format within the system, the Discharger shall electronically submit the data in a tabular format as an attachment.

b. The Discharger shall attach a cover letter to the SMR. The information contained in the cover letter shall clearly identify violations of the WDRs; discuss corrective actions taken or planned; and the proposed time schedule for corrective actions. Identified violations must include a description of the requirement that was violated and a description of the violation.

c. SMRs must be submitted to the Regional Water Board, signed and certified as required by the standard provisions (Attachment D), to the address listed below:

   Regional Water Quality Control Board
   Santa Ana Region
   3737 Main Street, Suite 500
   Riverside, CA 92501-3348

6. The Discharger shall attach a cover letter to the SMR. The information contained in the cover letter shall clearly identify violations of the WDRs; discuss corrective actions taken or planned; and the proposed time schedule for corrective actions. Identified violations must include a description of the requirement that was violated and a description of the violation.

7. By May 1 of each year, the Discharger shall submit an annual report to the Regional Water Board. The annual report shall include the following:

   a. Tabular and graphical summaries of the monitoring data obtained during the previous year;

   b. A discussion of the compliance record and the corrective actions taken or planned, which may be needed to bring the discharge into full compliance with the waste discharge requirements;

   c. A summary of the quality assurance (QA) activities for the previous year; and

   d. For priority pollutant constituents that do not have effluent limitations but are required to be monitored, the Discharger shall evaluate the monitoring data obtained during the previous year and determine whether detected constituents are at levels that would warrant reopening the permit to include effluent limitations for such constituent(s). To conduct this evaluation, the concentration of detected constituents shall be compared to the most stringent applicable receiving water objectives (freshwater or human health (consumption of organisms only) as specified for that pollutant in 40 CFR 131.384). The Discharger shall include a discussion of the corrective actions taken or planned to address values above receiving water objectives.

C. Discharge Monitoring Reports (DMRs)

1. As described in Section X.B.1 above, at any time during the term of this permit, the State or Regional Water Board may notify the Discharger to electronically submit SMRs that will satisfy federal requirements for submittal of Discharge Monitoring Reports (DMRs). Until such notification is given, the Discharger shall submit DMRs in accordance with the requirements described below.

---

[4] *See Federal Register/ Vol. 65, No. 97 / Thursday, May 18, 2000 / Rules and Regulations.*

2. DMRs must be signed and certified as required by the Standard Provisions (Attachment D). The Discharger shall submit the original DMR and one copy of the DMR to the address listed below:

Table E-6. Monitoring Reporting Submittal

Standard Mail	FedEx/UPS/ Other Private Carriers
State Water Resources Control Board Division of Water Quality c/o DMR Processing Center PO Box 100 Sacramento, CA 95812-1000	State Water Resources Control Board Division of Water Quality c/o DMR Processing Center 1001 I Street, 15th Floor Sacramento, CA 95814

3. All discharge monitoring results must be reported on the official USEPA pre-printed DMR forms (EPA Form 3320-1). Forms that are self-generated will not be accepted unless they follow the exact same format of EPA Form 3320-1.

   Regional Administrator
   U. S. Environmental Protection Agency
   Region 9 – Attention WTR – 7
   75 Hawthorne Street
   San Francisco, CA 94105

D. Other Reports

1. The Discharger shall report the results of any special studies, acute and chronic toxicity testing, TRE/TIE, PMP, and Pollution Prevention Plan required by Special Provisions – VI.C. of this Order. The Discharger shall submit reports with the first monthly SMR scheduled to be submitted on or immediately following the report due date in compliance with SMR reporting requirements described in subsection X.B.5 above.

FIGURE E-1 – MAP OF RECEIVING WATER MONITORING STATIONS LOCATIONS

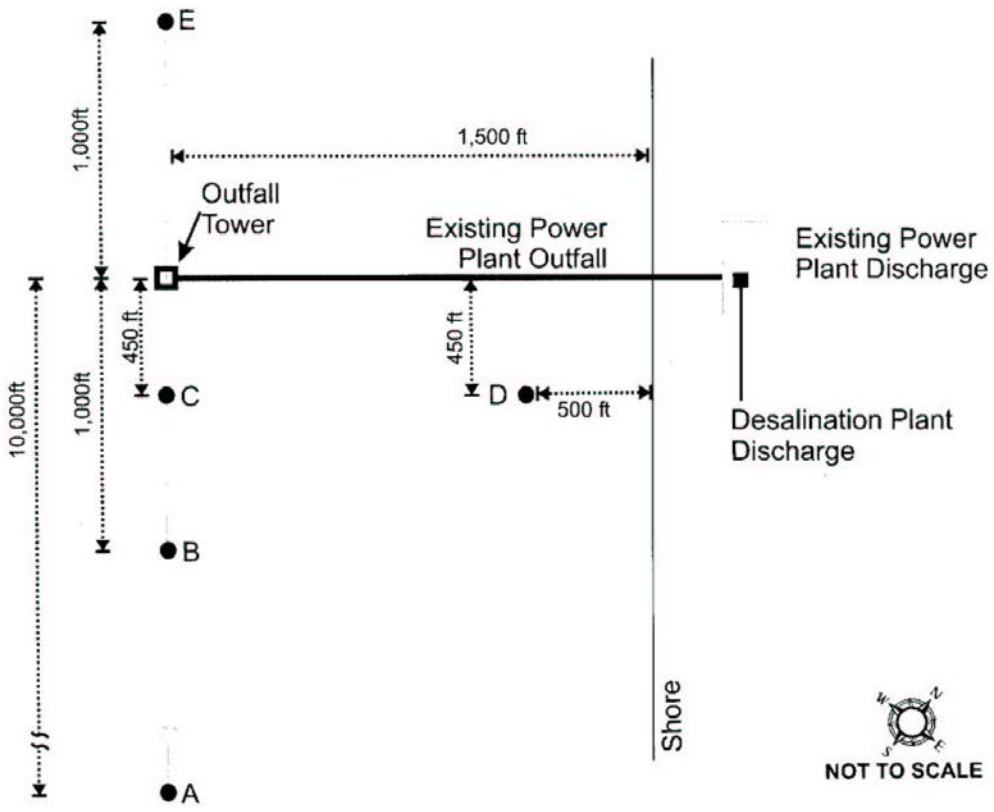

ATTACHMENT F – FACT SHEET

Table of Contents

I. Permit Information F-3
II. Facility Description F-4
A. Description of Wastewater Treatment or Control Systems F-9
B. Discharge Points and Receiving Waters F-12
C. Summary of Existing Requirements and Self Monitoring Report (SMR) Data - (Not Applicable) F-13
D. Compliance Summary - (Not Applicable) F-13
E. Planned Changes - (Not Applicable) F-13
III. Applicable plans, policies, and regulations F-14
A. Legal Authorities F-14
B. California Environmental Quality Act (CEQA) F-14
C. State and Federal Regulations, Policies, and Plans F-18
1. Water Quality Control Plans F-18
2. Thermal Plan F-19
3. California Ocean Plan F-19
4. Alaska Rule F-20
5. Stringency of Requirements for Individual Pollutants F-20
6. Anti-degradation Policy. F-20
7. Anti-Backsliding Requirements F-21
D. Impaired Water Bodies on CWA 303(d) List F-21
E. Other Plans, Policies and Regulations F-21
1. Clean Water Act Section 316(b) Applicability F-21
2. Water Code Section 13142.5(b) Applicability and Compliance F-23
IV. Rationale for effluent limitations and discharge specifications F-35
A. Discharge Prohibitions F-36
B. Technology-Based Effluent Limitations F-36
1. Scope and Authority F-36
2. Applicable Technology-Based Effluent Limitations F-37
C. Water Quality-Based Effluent Limitations (WQBELs) F-38
1. Scope and Authority F-38
2. Applicable Beneficial Uses and Water Quality Criteria and Objectives F-38
3. Determining the need for WQBELs F-39
4. WQBEL Calculations F-40
5. Discharge Flow Limitation F-44
6. Whole Effluent Toxicity (WET) F-44
D. Final Effluent Limitations F-46
E. Interim Effluent Limitations (Not Applicable) F-46
F. Land Discharge Specifications (Not Applicable) F-46
G. Reclamation Specifications (Not Applicable) F-46
V. Rationale for receiving water limitations F-46
A. Surface Water F-46
B. Groundwater (Not Applicable) F-46

VI. Rationale for monitoring reporting requirements F-47
A. Influent Monitoring F-47
B. Effluent Monitoring F-47
C. Whole Effluent Toxicity Testing F-48
D. Receiving Water Monitoring F-48
1. Surface Water F-48
2. Groundwater (Not Applicable) F-48
E. Other Monitoring Requirements (Not Applicable) F-48
VII. Rational for provisions F-49
A. Standard Provisions F-49
B. Special Provisions F-49
1. Reopener Provisions F-49
2. Special Studies and Additional Monitoring Requirements F-49
3. Best Management Practices and Pollution Prevention (Not applicable) F-49
4. Construction, Operation, and Maintenance Specifications (Not Applicable) F-49
5. Other Special Provisions (Not Applicable) F-49
6. Compliance Schedules (Not Applicable) F-49
VIII. Public participation F-49
A. Notification of Interested Parties F-50
B. Written Comments F-50
C. Public Hearing F-50
D. Waste Discharge Requirements Petitions F-51
E. Information and Copying F-51
F. Register of Interested Persons F-51
G. Additional Information F-51

List of Tables

Table F-1. Facility Information F-3
Table F-2. Summary of Desalination Facility Discharge Flows F-7
Table F-3. Typical RO Membrane Cleaning Solution Discharge Volumes F-12
Table F-4. Summary of Substantial SEIR Findings Related to Water Quality F-15
Table F-5. Basin Plan Beneficial Uses F-18
Table F-6. Ocean Plan Beneficial Uses F-20
Table F-7. Design, Technology, and Mitigation Measures to Minimize Impacts to Marine Life F-35
Table F-8. Summary of TBELs on Table A of the Ocean Plan F-37
Table F-9. Ocean Plan Table B Receiving Water Standards for the Protection of Marine Aquatic Life F-39
Table F-10. Pollutant Background Concentrations F-41
Table F-11. Example Ocean Plan Table B Receiving Water Objectives F-41
Table F-12. Summary of WQBELs on Table B of the Ocean Plan F-43

ATTACHMENT F – FACT SHEET

As described in Section II of this Order, this Fact Sheet includes the legal requirements and technical rationale that serve as the basis for the requirements of this Order.

This Order has been prepared under a standardized format to accommodate a broad range of discharge requirements for Dischargers in California. Only those sections or subsections of this Order that are specifically identified as "not applicable" have been determined not to apply to this Discharger. Sections or subsections of this Order not specifically identified as "not applicable" are fully applicable to this Discharger.

I. PERMIT INFORMATION

The following table summarizes administrative information related to the facility.

Table F-1. Facility Information

WDID	8 303431001
Discharger/Operator	Poseidon Resources (Surfside) LLC
Name of Facility	Huntington Beach Desalination Facility
Facility Address	21730 Newland Street Huntington Beach, CA 92646 Orange County
Facility Contact, Title and Phone	Josie McKinley, Director, Project Development, (714) 596-7946
Authorized Person to Sign and Submit Reports	Peter MacLaggan, Vice President, (619) 595-7802
Mailing Address	501 W. Broadway, Suite 2020, San Diego, CA 92101
Billing Address	SAME
Type of Facility	Desalination
Major or Minor Facility	Minor
Threat to Water Quality	2
Complexity	B
Pretreatment Program	N/A
Reclamation Requirements	N/A
Facility Permitted Flow	56.59 MGD 12-Month Average Flow 60.3 (MGD) Maximum Daily Flow
Facility Design Flow	56.59 MGD 12-Month Average Flow 60.3 (MGD) Maximum Daily Flow
Receiving Water	Pacific Ocean
Receiving Water Type	Ocean Water

A. Poseidon Resources (Surfside) LLC (hereinafter Discharger) is the owner and operator of the Huntington Beach Desalination Facility (hereinafter Facility).

For the purposes of this Order, references to the "discharger" or "permittee" in applicable federal and State laws, regulations, plans, or policy are held to be equivalent to references to the Discharger herein.

B. The Facility will discharge a 12-Month Average Flow of 50 million gallons per day (MGD) of concentrated seawater, up to a total of 6.59 MGD of filter backwash and RO subsequent rinse wastewater, and up to approximately 1.67 MGD of stormwater runoff to the Pacific Ocean, a water of the United States. Discharges from the Facility are currently regulated by Order No. R8-2006-0034.

C. The Discharger filed a report of waste discharge and submitted an application for renewal of its Waste Discharge Requirements (WDRs) and a National Pollutant Discharge Elimination System (NPDES) permit on February 2, 2011. The application was deemed complete on March 7, 2011.

II. FACILITY DESCRIPTION

Poseidon Resources (Surfside) LLC proposes to construct and operate the 50 MGD Huntington Beach Desalination Facility (Facility) on 12 acres located adjacent to the Applied Energy Services (AES) Huntington Beach Generating Station (HBGS). The Discharger has entered into a 55-year option agreement with AES, the owner and operator of the HBGS, for the desalination project site.

The Facility will withdraw source water from the existing AES HBGS cooling system discharge pipe and remove the salts in the water through a desalination process. On a 12-month average basis, the Facility will utilize 106.59 MGD of seawater as source water and produce a 12-month average 50 MGD of potable water. The 50 MGD of concentrated seawater plus process discharges of approximately 6.59 MGD (described below) will be returned to the HBGS discharge pipeline, combined with either the remaining HBGS cooling water system discharge or the remaining Facility intake water and discharged to the ocean. The Facility is expected to start operation in 2015.

HBGS facilities periodically engage in heat treatment as an antifouling measure. This heat treatment may occur every six to eight weeks, and may last approximately six to eight hours per occurrence. The Facility will not operate when the HBGS is engaged in heat treatment. To make up for the periods of inactivity that are attributable to HBGS heat treatment or temporary onsite Facility maintenance, the Facility may be operated at its maximum day peak production capacity. The Facility's production capacity would increase the Facility's discharges during these periods, resulting in a maximum daily concentrated seawater discharge flow of 54 MGD, and a maximum daily total Facility discharge flow of 60.3 MGD (See Table F-2). Table F-2 compares this Order's flow limits with the flow limits set forth in Order No. R8-2006-0034.

During initial start-up operations and temporary onsite maintenance operations, it may be necessary to temporarily return all or a portion of the filtered pretreated seawater (up to approximately 126.7 MGD) back into the HBGS discharge pipeline instead of routing the filtered seawater flow to the reverse osmosis units. Additionally, during such start-up periods or periods when it is not feasible to deliver product water to the regional potable water system, it may be necessary to temporarily discharge dechlorinated product water from the reverse osmosis process back into the HBGS discharge pipeline. During these temporary periods, the maximum allowable flows returned to the ocean would not exceed 126.7 MGD and the volume and salinity of the additional discharges would be identical to the volume and salinity of the intake water. As a result, no water quality changes would occur as a result of such temporary process water diversions.

The desalination process consists of the following:

1. **Intake pumps** – To prevent microbiological growth in the intake systems and filter media, the intake water will be chlorinated intermittently, as necessary.

2. **Coagulation** – To enhance the operation of the filters and to provide the required quality water to the reverse osmosis (RO) treatment units, coagulant (ferric chloride or ferric sulfate) and polymer will be added to the seawater ahead of the pretreatment filters.

3. **Media or Membrane Filtration Pretreatment** – To prepare the water for the RO treatment, a media or a membrane filtration pretreatment system will be used. The final phase of pretreatment will involve the use of cartridge filtration. The filter cartridges will be standard polypropylene wound filters enclosed in a pressure vessel. The pressure vessels will be located in the RO feed water piping between the pretreatment and RO processes.

4. **pH Adjustment and Dechlorination** – To reduce the potential for scale formation in the RO process, sulfuric acid may be added to the water after the media or membrane filtration pretreatment and before the cartridge filtration. The required dosage amount will be determined based on the bicarbonate concentration of the seawater and the Stiff Davis Index (SDI) needed in the RO concentrate. The acid also provides carbon dioxide in the RO permeate (product water), which is needed to react with the lime for product water stabilization in the permeate post-treatment step. Dechlorination using sodium bisulfite will also be done before the cartridge filtration to prevent damage to the RO membranes and to protect the RO systems.

5. **RO Treatment Systems** - The RO process will use high-rejection seawater membranes. The system will be made up of 14 process trains, each train with a design capacity of approximately 4.2 MGD. The plant will be designed to produce an average of 50 MGD of potable water using only 13 of the 14 RO trains. The 14th RO train will be used for standby purposes when any of the other trains requires maintenance. This arrangement provides approximately 4 percent standby capacity, which is needed to ensure continuous potable water delivery while accommodating normal membrane wear and maintenance requirements.

6. **Post-Treatment Process:** Product water from the RO process requires chemical conditioning prior to delivery to the distribution system to increase hardness and reduce its corrosion potential. Limestone and carbon dioxide will be used for post-treatment stabilization of the water. In addition, the final product water must be disinfected prior to delivery to the distribution system. Chlorine, in the form of sodium hypochlorite and ammonia, will be added as a disinfectant to meet California Department of Public Health (CDPH) water quality standards for potable water disinfection and to control biological growth in the transmission pipeline.

   The HBGS generates up to 880 megawatts of electrical power (rated capacity) using four steam generators. The HBGS steam generators are cooled by a once-through seawater flow system. Seawater is drawn into the HBGS by up to eight circulating water pumps. Six of the cooling water pumps (Units 1, 2 and 4) are rated at 63.4 MGD while the remaining two pumps (Unit 3) are rated at 66.7 MGD. The Facility will receive inflow from the HBGS cooling system discharge pipe. Seawater for cooling the HBGS steam generators is withdrawn from an intake structure located approximately 1,840 feet offshore from the mean high tide line. The intake structure is located in approximately 34 feet of water, and rises approximately 16 feet from the ocean floor. A horizontal velocity cap sits atop the vertical intake structure. After passing through steam condensers, HBGS cooling water is discharged to the Pacific Ocean via an engineered outfall discharge structure. Order No. R8-2006-0011 (NPDES CA0001163) issued by the Regional Water Board to AES Huntington Beach (operator of the HBGS) authorizes the discharge of up to 514 MGD of single-pass seawater.

   Requirements established in the existing Order for the Desalination Facility, Order No. R8-2006-0034, as well as this Order, are based on the Facility's use of intake water from the HBGS cooling water system. Between 2006 and 2010, the HBGS's annual average seawater intake flow through the power plant ranged from 200 MGD to 268 MGD. The power plant's maximum daily intake flow reached 507 MGD in each year. On April 1, 2011, AES Huntington Beach submitted to the State Water Board a plan for compliance with the State Water Board's "Water Quality Control Policy for the Use of Coastal and Estuarine Waters for Power Plant Cooling." Based on these policy requirements and AES's implementation plan, the HBGS cooling water system is anticipated to be in operation until at least 2020.

   It is anticipated that the Facility will operate in conjunction with the HBGS (a co-located operational scenario) by using HBGS cooling water discharges as its source water. When operating in this co-location mode, the Facility's feed water intake requirements will not increase the volume or the velocity of HBGS's cooling water intake.

   If HBGS were to temporarily cease operations of its once-through cooling water system (e.g., during HBGS maintenance shutdowns), or if it were to provide insufficient flows to satisfy the Facility's intake flow requirements, the Discharger would operate the HBGS's seawater intake and outfall independently in a temporary stand-alone operational mode. This temporary stand-alone mode might occur in one of two situations: (1) when HBGS is temporarily shut down; or (2) when HBGS is operating but its discharge volumes are

not sufficient to meet the Facility's intake requirements. When operating in temporary stand-alone mode, the Facility's intake flows will be maintained at approximately 126.7 MGD – an amount which is less than HBGS's currently permitted intake flow. See further discussion regarding intake regulations in section III E.

If HBGS were to permanently terminate the use and operation of its once-through cooling water system and/or permanently stop generating electricity, the Facility would operate the seawater intake and outfall independently in a long-term stand-alone operational mode. When operating in long-term stand-alone mode, the Facility's intake flows will be maintained at approximately 126.7 MGD – an amount which is less than HBGS's currently permitted intake flow. See further discussion regarding intake requirements and regulations in section III E.

This Order establishes permit effluent limitations and discharge prohibitions and provisions for the co-located operational scenario and the temporary stand-alone operation scenario. As noted in Section III.E, the Discharger would submit a separate Report of Waste Discharge to address long-term stand-alone operations in the event that HBGS permanently ceases use of the once through cooling water system or permanently ceases electricity generating operations at the current site.

To ensure protection of receiving water beneficial uses and to limit salinity concentrations in receiving waters, Order No. R8-2006-0034 limited the Facility's total outfall discharge under the co-located operations to a maximum of 44.7 percent of the intake flow (total desalination discharge 56.59 MGD/total HBGS discharge of 126.7 MGD). Under this requirement, the Facility could achieve its production capacity whenever HBGS flows meet or exceed 126.7 MGD. If the HBGS does not direct 126.7 MGD to the Facility, the Facility will operate the intake system in a temporary stand-alone mode to maintain a minimum intake flow at approximately 126.7 MGD, thereby ensuring that the Facility's discharge remains at or less than 44.7 percent of the total intake volume.

Table F-2. Summary of Desalination Facility Discharge Flows

Flow Component	Order No. R8-2006-0034 (MGD)	Proposed Limits[a]		
		12-M Average Flow[a,b] (MGD)	Maximum Day Flow[c] (MGD)	Start Up/ Maintenance[d]
Wastewater Flow Component				
• Spent filter backwash flows	6.3	6.3	6.3	18.7[e]
• Reverse osmosis concentrate seawater	50	50	54	54

Table F-2. Summary of Desalination Facility Discharge Flows

Flow Component	Order No. R8-2006-0034 (MGD)	Proposed Limits[a]		
		12-M Average Flow[a,b] (MGD)	Maximum Day Flow[c] (MGD)	Start Up/ Maintenance[d]
• Reverse osmosis cleaning solutions rinse water	0.29	0.29	--	--
• Pretreated Seawater or Product Water	--	--	--	54
Total Flows Discharged Back into the HBGS Discharge Pipe[f]	56.59	56.59	60.3	126.7
Total Minimum Intake Flows	126.7	126.7	135.0[g]	126.7
Maximum contribution of total desalination facility discharge flow to the total outfall discharge	44.7%	44.7%	44.7%	N/A

Footnotes of the Table F-2:

a. Listed flows do not include storm water runoff from Facility's site (up to 1.67 MGD), which would be discharged to the HBGS discharge pipe and outfall.

b. Under normal operating conditions, the Facility would produce potable water at a 12-M average production rate of approximately 50 MGD.

c. The Facility will not operate when HBGS is engaged in heat treatment. Such heat treatment may occur every six to eight weeks, and may take approximately six to eight hours per occurrence. To make up for the periods of inactivity that are attributable to HBGS heat treatment or temporary onsite Facility maintenance, the Facility may be operated at its maximum day peak production capacity. The Facility's production capacity would increase the Facility's discharges during these periods, resulting in a maximum daily concentrated seawater discharge flow of 54 MGD, and a maximum daily total Facility discharge flow of 60.3 MGD. No RO cleaning solution will be discharged.

d. Projected flows may occur during start-up operations or temporary onsite maintenance operations when all or a portion of the filtered pretreated seawater is directed back into the HBGS discharge pipe. Additionally, dechlorinated product water would be temporarily discharged back into the HBGS discharge pipe during start-up periods or other times when it is not feasible to deliver product water to the regional potable water system.

e. The backwash flow includes flow to meet startup requirements associated with conditioning filters and flushing pipelines.

f. Facility wastewater would be discharged back into the HBGS cooling water discharge pipe prior to mixing with HBGS cooling water. The combined discharge effluents will flow to the Pacific Ocean via the engineered HBGS outfall discharge structure.

g. The Discharger may need to install a variable frequency drive intake pump to attain an intake flow of 135 MGD as the existing AES intake pump configurations cannot achieve this exact flow rate.

A. Description of Wastewater Treatment or Control Systems

The Facility will generate the following waste streams that will be discharged to the AES HBGS cooling system discharge pipe and then to the AES HBGS ocean outfall:

1. Concentrated seawater resulting from the RO treatment process - Approximately one gallon of concentrated seawater will be created for every gallon of potable drinking water produced; therefore, for 50 MGD of desalination product water, approximately 50 MGD of concentrated seawater will be generated. The salinity of the concentrate will be 68,000 mg/L, twice the concentration of the incoming seawater (34,000 mg/L).

2. Spent Filter Backwash Water - The pretreatment filters will be cleaned (backwashed) to remove the intake seawater solids that accumulate in the filtration units. The desalination plant will use filtered seawater for backwash. The amount of backwash water used will be between 3 to 6.3 percent (average of 4 percent) of the total intake seawater flow required for desalination. For a 50-MGD facility, operating at 50-percent recovery, the average and maximum amounts of filter backwash water will be 4.0 MGD and 6.3 MGD, respectively. The spent filter backwash water will have the same salinity as the intake ocean water (34,000 mg/L).

   The handling of the spent filter backwash will depend upon the choice of the filtration technology to be used by the Facility. Under the media filtration option, ferric chloride or ferric sulfate coagulant will be added to the influent to enhance removal of particulate matter. The coagulant would be removed from the filter during the filter backwash cycle, collected in a sedimentation basin (solids handling facility), removed as sludge, and disposed of at a landfill. The decant from the sedimentation basin will be directed to the Facility inlet or to the HBGS discharge pipeline. The membrane filtration option does not require the use of coagulant. Under this option, the backwash water would be discharged directly to the discharge pipeline. However, the membrane filtration system would require periodic chemical cleaning. The spent cleaning solution would be collected in a separate tank, neutralized and discharged to the sanitary sewer.

3. Used Membrane Cleaning Solution and Rinse Water- The accumulation of silts or scale on the RO membranes causes fouling that reduces membrane performance. The RO system membranes will be cleaned periodically to remove foulants and to extend the useful life of the RO membrane. Typical cleaning frequency of the RO membranes is twice per year. Typically, one RO train is taken off line at a time for cleaning and two RO trains are cleaned per month. In extreme conditions (for example, during very wet years or prolonged periods of strong winds when the silt content in the raw seawater may increase significantly), as many as four membrane trains may need to be cleaned in the same month.

   Membrane cleaning typically takes one day per membrane train to complete. Since one membrane train is typically cleaned at a time and each of the 13 RO membrane trains have to be cleaned two times per year, the cleaning of all membrane trains will

typically take a total of 26 days per year (13 trains x 2 cleanings/train x 1 day per cleaning). Taking into consideration that there are 52 weeks per year, an average of one membrane train will be cleaned every two weeks, i.e., typically, two membrane cleanings will occur per month. In rare situations, as many as four membrane cleanings may occur per month.

To clean the membranes, a chemical cleaning solution is circulated through the membrane train for a preset time.

Chemicals typically used for cleaning the RO membranes include:

- Citric Acid - (2% solution)
- Sodium Hydroxide - (0.1% solution)
- Sodium Tripolyphosphate - (2% solution)
- Sulfuric Acid - (0.1% solution)
- Sodium Dodecylbenzene Sulfonate - (0.25%)

After the cleaning solution circulation is completed, the spent cleaning solution waste is evacuated from the train to a storage tank where it may be reused or diverted for appropriate disposal. Once the spent cleaning solution is removed from the RO train, the membranes are rinsed with RO water to remove all the residual cleaning solution. The spent rinse water for membrane cleaning is stored separately in a rinse water tank prior to disposal.

The various membrane cleaning waste discharge streams are described below:

- Cleaning Solution waste is the actual spent membrane-cleaning chemical. Spent cleaning wastes will be reused or discharged to the local sewer system for further treatment at the Orange County Sanitation District's regional wastewater treatment facility.
- First Rinse water - is the first batch of water used to rinse the membranes after the recirculation of cleaning solution is discontinued. This rinse water contains diluted residual cleaning solution and will also be discharged to the local sewer system.
- Subsequent Rinse water is the water used to rinse the membranes after the first rinse. This rinse wastewater contains only trace amounts of cleaning solution and will be discharged with the concentrated seawater waste to the ocean.

The spent cleaning solution and first rinse water will be conveyed to a tank for retention and treatment prior to discharge to the local sewer system pursuant to an industrial pretreatment permit issued by the Orange County Sanitation District. The tank will have sufficient capacity to store cleaning solution from two simultaneous RO membrane train cleanings.

The subsequent rinse water will be conveyed to a 200,000 gallon rinse water tank for retention and treatment prior to discharge to the Facility effluent outfall to the HBGS cooling system discharge pipe. Since the volume of the subsequent rinse water generated during cleaning of one membrane train is 76,000 gallons, the rinse water tank will have sufficient capacity to store cleaning solution from two simultaneous RO membrane train cleanings. The subsequent rinse water will be pumped out of the rinse water tank to the Facility effluent outfall to the HBGS cooling system discharge pipe at a rate of 200 gpm (0.29 MGD). Because the volume of the spent subsequent rinse water per one cleaning is 76,000 gallons, it will take approximately 6.5 to 7 hours to discharge the treated spent subsequent rinse water to the Facility outfall.

Under normal operating conditions, the total volume of subsequent rinse water used for membrane cleaning will be 152,000 gallons per month. These discharges will be discrete events and will continue for a total of 13 to 14 hours per month at a rate of 200 gpm (0.29 MGD). In rare situations when the number of membrane cleanings per month may need to be increased, the total volume of the discharged treated cleaning solution to the Facility outfall will be limited to 304,000 gallons per month.

The typical volume of waste streams generated during the cleaning of one RO membrane train (independent of type of cleaning solution) is summarized in Table F-3.

Table F-3. Typical RO Membrane Cleaning Solution Discharge Volumes

Type of Discharge	Gallons Per Membrane Train	Percentage of Total Volume of Discharge per-RO Train Cleaning
Cleaning Solution Waste	4,000	4.4
First Rinse Wastewater - Residual Cleaning Solution	11,000	12.1
Total Discharge to Sewer	15,000	
Subsequent Rinse Wastewater	76,000	82.5
Total Discharge to Outfall	76,000	
Total Discharge	91,000	100

Attachment C-1 presents a schematic of water flow at the Facility. Attachment C-2 presents a schematic of the cooling water intake and discharge points.

B. Discharge Points and Receiving Waters

The Facility will discharge exclusively at Discharge Point 001 (DP-001) located at latitude 33°38'38" and longitude 117°58'44" prior to mixing with the AES effluent discharge. The combined discharge will flow to the Pacific Ocean.

Order No. R8-2006-0034 assigned a minimum month initial dilution of 7.5 to 1 to the Facility discharge. This initial dilution ratio was based on initial dilution modeling conducted for the AES HBGS outfall in 1980 by the State Water Resources Control Board. It is appropriate as a conservative approach to apply this 7.5 to 1 initial dilution factor in establishing effluent limitations for discharges from this Facility. The Order also maintains the 1,000 foot Zone of Initial Dilution assigned to the HBGS.

Comprehensive hydrodynamic modeling of a variety of Facility discharge scenarios was recently assessed by Dr. Scott Jenkins and Joseph Waysl. In evaluating the range of potential intake flows and oceanographic conditions, Jenkins and Waysl determined that minimum initial dilution conditions occur with a combination of tranquil tide, wind,

current, thermal characteristics, and minimum intake flows of 126.7 MGD. Jenkins and Waysl estimate the probability of occurrence for such minimum mixing oceanographic conditions at less than 1%. At a 1,000 foot distance from the outlet structure, the Jenkins and Waysl modeling simulated a monthly minimum dilution ratio of 10:1 under co-located (126.7 MGD warm water) conditions. A dilution of 8:1 was simulated 1,000 feet from the outlet structure under stand-alone (126.7 cold water) conditions. Thus, the continued application of the previous outfall dilution ratio of 7.5:1 is considered conservative and protective of water quality.

Additional information regarding the data collection and modeling results submitted to the Regional Water Board are contained within the Facility's file at the Regional Water Board office.

C. Summary of Existing Requirements and Self Monitoring Report (SMR) Data - (Not Applicable)

D. Compliance Summary - (Not Applicable)

E. Planned Changes - (Not Applicable)

III. APPLICABLE PLANS, POLICIES, AND REGULATIONS

The requirements contained in the proposed Order are based on the requirements and authorities described in this section.

A. Legal Authorities

This Order is issued pursuant to Section 402 of the Federal Clean Water Act (CWA) and implementing regulations adopted by the U.S. Environmental Protection Agency (USEPA) and Chapter 5.5, Division 7 of the California Water Code (CWC) (commencing with Section 13370). It shall serve as a NPDES permit for point source discharges from this Facility to surface waters. This Order also serves as Waste Discharge Requirements (WDRs) pursuant to Article 4, Chapter 4, Division 7 of the CWC (commencing with Section 13260).

B. California Environmental Quality Act (CEQA)

Under Water Code Section 13389, this action to adopt waste discharge requirements that will serve as a NPDES permit is exempt from the provisions of CEQA, Public Resources Code Section 21100 through 21177.

In compliance with the California Environmental Quality Act, a Subsequent Environmental Impact Report (SEIR) for the Poseidon Seawater Desalination Project at Huntington Beach was certified by the City of Huntington Beach on September 7, 2010, and the City adopted a CEQA Statement of Findings of Facts with Statement of Overriding Considerations and Mitigation Monitoring and Reporting Program. Also on September 7, 2010, the City of Huntington Beach amended Conditional Use Permit No. 02-04. On September 20, 2010, the City of Huntington Beach approved Coastal Development Permit No. 10-014.

The final SEIR identified no significant impacts with mitigation measures for hazards and hazardous materials, and stormwater drainage. No significant impacts were identified and no mitigation required for issues related to marine life and water quality.

The Facility as currently permitted under Order No. R8-2006-0034 may operate in the absence of the power plant generating electricity but must adhere to a 44.7% minimum dilution ratio to ensure compliance with Ocean Plan receiving water quality standards. Operating the Facility at a feed water flow rate of 152 MGD, as analyzed in the final SEIR, would provide for more dilution of the Facility's discharge than is required under the Facility's existing Order and under state and federal water quality regulations, and it could potentially cause incremental entrainment and impingement effects that can be avoided by operating the Facility at an annual average of 126.7 MGD.

To prevent salinity-related impacts and to ensure compliance with the Ocean Plan, this Order establishes requirements that the Facility discharge (filter backwash, concentrated seawater, plus RO membrane cleaning solutions) remain at or less than

44.7 percent of the total intake flow. The Order also maintains the existing conservative initial dilution factor of 7.5:1 and 1,000 foot Zone of Initial Dilution assigned to the HBGS. To conform to this requirement while minimizing the potential for impingement and entrainment effects, the average annual intake flow for the Facility under temporary stand-alone operations will be approximately 126.7 MGD (see Table F-2). Compliance with this average annual intake flow ensures that the Facility discharge is consistent with the Ocean Plan.

The Regional Water Board has reviewed the final SEIR for water quality related issues and mitigation measures. These issues and the Regional Water Board's analysis are summarized in Table F-4.

Table F-4. Summary of Substantial SEIR Findings Related to Water Quality

Potential Issue	SEIR Finding	SEIR-Required Mitigation	Regional Water Board Analysis
Chemical release from Facility operation	No Significant Impact. Potential effects from chemical additives during the desalination process will be negligible.	None required.	Monitoring and Reporting Program will require monitoring of the effluent stream for trace contaminants and chemicals.
Hazards and Hazardous Materials	No Significant Impact. Hazards associated with the project will be minimized as a result of project features designed to reduce risks associated with chemical use and storage, and existing regulatory requirements for safe handling and storage of chemicals.	None required	Renewed permit requires the Discharger to develop and implement a best management practices plan consistent with the general guidance contained in the EPA *Guidance Manual for Developing Best Management Practices (BMPs)* (EPA 833-B-93-004). In particular, a risk assessment of each area identified by the Discharger shall be performed to determine the potential for hazardous or toxic waste/material discharge to surface waters.
Receiving Water Temperature	No significant impact. Modeling studies demonstrate that no significant effects will occur that are associated with the combined desalination facility discharge with the HBGS's discharge or the desalination facility discharge only. Due to the increase in density of the combined discharges, the HBGS thermal footprint will be reduced.	None required.	To ensure compliance with Thermal Plan requirements, the MRP of the renewed permit requires the Discharger to perform continuous receiving water temperature monitoring at the influent and effluent monitoring locations and quarterly temperature monitoring at 11 offshore water stations, as per Attachment E. Under standalone operations, no significant heat will be added to the discharge.
Receiving Water Salinity	No Significant Impact. The Project discharge will increase salinity levels in a very small area of the Zone of Initial Dilution. Results of modeling indicate that receiving water salinity will be in compliance with California Ocean Plan requirements and will not exceed levels which would cause	None required.	To ensure protection of receiving water beneficial uses and to limit salinity concentrations in receiving waters, the renewed permit limits the Facility's discharge (filter backwash, concentrated seawater, plus RO cleaning solutions rinse water) to a maximum of 44.7 percent of the total intake flow. Under this requirement, the Facility can achieve a 50 MGD production rate and comply with

Table F-4. Summary of Substantial SEIR Findings Related to Water Quality

Potential Issue	SEIR Finding	SEIR-Required Mitigation	Regional Water Board Analysis
	significant impacts to aquatic or benthic species.		California Ocean Plan and Clean Water Act requirements whenever intake flows meet or exceed 126.7 MGD. Additionally, Receiving Water Monitoring Requirement IV.A3 of the MRP requires the Discharger to perform weekly effluent salinity monitoring at the desalination facility effluent monitoring location, and quarterly receiving water monitoring for salinity at 11 offshore water stations, as per Attachment E.
Entrainment & Impingement	No Significant Impact. When operating in conjunction (co-located) with HBGS, the Project will not cause additional entrainment and impingement losses. When operating independent of HBGS (temporary or long-term stand-alone), the Project would decrease the volume, velocity and the temperature of seawater relative to HBGS's uses, and no changes in the infrastructure or configuration of the intake or discharge facilities are proposed or would be required. The existing velocity cap ensures State Water Board recommended technology for avoiding impingement. In the vicinity of the intake, there are no areas of biological significance. Marine Biological and Entrainment and Impingement studies (SEIR Appendices M and O) conclude there are no endangered or threatened species, and species with high commercial or recreational significance are very uncommon. Impacts on marine organisms due to the potential of entrainment would not substantially reduce populations of affected species, or affect the ability of the affected species to sustain populations. Therefore, under the desalination facility's co-located and temporary or long-term stand-alone operations, there are no	None required.	The Facility is not subject to CWA Section 316(b). When operating under co-located conditions, the Facility will not increase the volume or the velocity of HBGS's cooling water intake nor will it increase the number of organisms impinged or entrained by the HBGS's cooling water intake structure. Therefore, when the Facility is operating in a co-located mode, there will be no additional impacts on marine life. When operating under temporary stand-alone conditions, the Facility is utilizing the best available site, design, technology and mitigation measures feasible to avoid the intake and mortality of marine life, and thereby conforms to CWC Section 13142.5(b). If the HBGS permanently ceases operations of the once-through cooling water system and/or if HBGS permanently stops generating electricity at the current site, within 180 days of receiving such notice, the Discharger shall submit a separate Report of Waste Discharge to the Regional Water Board. Long-term stand-alone operation of the Facility will require review to ensure compliance with California Water Code Section 13142.5(b) by employing any additional and/or better design or technology features that were not previously feasible during co-located or temporary stand-alone operations. Based on discussion in Section III E, when operating under long-term stand-alone conditions, the Facility can comply with mitigation requirements under CWC section 13142.5(b) by maintaining HBGS's existing marine life mitigation program.

Table F-4. Summary of Substantial SEIR Findings Related to Water Quality

Potential Issue	SEIR Finding	SEIR-Required Mitigation	Regional Water Board Analysis
	significant impingement or entrainment impacts to marine organisms.		
Hydrology, Drainage and Storm Water Runoff	No significant impact. The project would not create or contribute runoff water that would exceed the capacity of existing or planned stormwater drainage systems, or contribute significant increases in the flow velocity or volume of stormwater runoff to cause environmental harm, or provide substantial additional sources of polluted runoff.	Prior to issuance of permits, applicant shall prepare a hydrology and hydraulic study on storm water runoff and demonstrate compliance with NPDES permit requirements for urban runoff and storm water discharge and any regulations adopted by the City of Huntington Beach.	The Discharger will be required to conform to applicable requirements governing storm water discharges associated with construction activities through compliance with provisions of California's General Permit for Storm Water Discharges Associated with Construction Activity (Order No. 2009-0009 DWQ (CAS000002)). In addition, the Discharger will monitor storm water discharges as per Attachment K, of the renewed permit. The Discharger will submit annual stormwater reports.
Construction-related impacts on hydrology and water quality	No significant impacts	As part of its compliance with the NPDES requirements, the applicant shall prepare a Notice of Intent (NOI) to be submitted to the Santa Ana Regional Water Quality Control Board providing notification and intent to comply with the State of California general permit prior to any construction occurring. Completion of a stormwater pollution prevention plan (SWPPP) shall be required for construction activities on site. Prior to any dewatering activities, the applicant shall obtain and comply with a general dewatering NPDES permit from the Santa Ana Regional Water Quality Control Board.	As part of its compliance with the renewed permit requirements, the Discharger shall prepare a Notice of Intent (NOI) to be submitted to the Santa Ana Regional Water Quality Control Board providing notification and intent to comply with the State of California general permit prior to any construction occurring.
Cumulative Effects on Biology and Water Quality	No Significant Impact. The cumulative effects on biology and water quality impacts are projected to be less than significant.	None required.	No discernible cumulative effects on marine biology and water quality are projected. The renewed MRP requires the Discharger to perform periodic receiving water quality monitoring for a variety of constituents to allow continued assessment of overall receiving water effects of the discharge (see Attachment E).

C. State and Federal Regulations, Policies, and Plans

1. **Water Quality Control Plans**. The Regional Water Board adopted a Water Quality Control Plan for the Santa Ana Basin (hereinafter Basin Plan) that became effective on January 24, 1995. The Basin Plan designates beneficial uses, establishes water quality objectives, and contains implementation programs and policies to achieve those objectives for the Pacific Ocean. In addition, State Water Resources Control Board (State Water Board) Resolution No. 88-63 (Sources of Drinking Water Policy) requires that, with certain exceptions, the Regional Water Board assign the municipal and domestic water supply use to water bodies. Based on the exception criteria specified in Resolution No. 88-63, the Regional Water Board excepted the nearshore and offshore zones of the ocean from the municipal and domestic supply beneficial use.

   The Basin Plan relies primarily on the requirements of the *Water Quality Control Plan for Ocean Waters of California* (Ocean Plan) for protection of the beneficial uses of the State ocean waters. The Basin Plan specifies the beneficial uses for the nearshore and offshore zones of the Ocean that are within the jurisdiction of the Santa Ana Regional Water Board.

   Beneficial uses applicable to the Pacific Ocean are presented in Table F-5.

Table F-5. Basin Plan Beneficial Uses

Discharge Point	Receiving Water Name	Beneficial Use(s)
001[1]	Pacific Ocean Nearshore[2] Zone from the San Gabriel River to Poppy Street in Corona del Mar	Present or Potential Beneficial Use a. Industrial service supply, b. Navigation, c. Water contact recreation, d. Non-contact water recreation, e. Commercial and sport fishing, f. Wildlife habitat, g. Rare, threatened or endangered species, h. Spawning, reproduction, and development, i. Marine habitat, and j. Shellfish harvesting. [Excepted from Municipal and Domestic supply]

[1] *This discharge is to AES-HBGS discharge pipeline to the Pacific Ocean.*

[2] *The Nearshore Zone is defined by the Ocean Plan, Chapter II, B.1.a., as "within a zone bounded by the shoreline and a distance of 1,000 feet from the shoreline or the 30 foot depth contour, whichever is further from the shoreline".*

Table F-5. Basin Plan Beneficial Uses

Discharge Point	Receiving Water Name	Beneficial Use(s)
001	Pacific Ocean Offshore Zone between the Nearshore Zone and the Limit of the State Waters	Present or Potential Beneficial Use a. Industrial service supply, b. Navigation, c. Water contact recreation, d. Non-contact water recreation, e. Commercial and sport fishing, f. Wildlife habitat, g. Rare, threatened or endangered species, and h. Spawning, reproduction, and development, and Marine habitat. [Excepted from Municipal and Domestic supply]

Requirements of this Order specifically implement the applicable Water Quality Control Plans

2. **Thermal Plan.** The State Water Board adopted a Water Quality Control Plan for Control of Temperature in the Coastal and Interstate Water and Enclosed Bays and Estuaries of California (Thermal Plan) on May 18, 1972, and amended this plan on September 18, 1975. This plan contains temperature objectives for coastal waters.

   The Facility will not significantly affect the temperature of the intake source water, thereby, the Thermal Plan does not apply. However, due to the increase in the discharge density from the Facility when combined with the HBGS heated discharge during power production, the combined effluent will result in a significant reduction of HBGS thermal footprint. Overall, the implementation of the Facility operations is expected to result in reduced temperature effects on marine resources compared to the existing HBGS's cooling water discharge. Requirements of this Order implement the Thermal Plan.

3. **California Ocean Plan.** The State Water Board adopted the *Water Quality Control Plan for Ocean Waters of California, California Ocean Plan* (Ocean Plan) in 1972 and amended it in 1978, 1983, 1988, 1990, 1997, 2000, and 2005. The State Water Board adopted the latest amendment on April 21, 2005 and it became effective on February 14, 2006. The Ocean Plan is applicable, in its entirety, to point source discharges to the ocean. The Ocean Plan identifies beneficial uses of ocean waters of the State to be protected as summarized below.

Table F-6. Ocean Plan Beneficial Uses

Discharge Point	Receiving Water	Beneficial Uses
001	Pacific Ocean	Industrial water supply; water contact and non-contact recreation, including aesthetic enjoyment; navigation; commercial and sport fishing; mariculture; preservation and enhancement of designated Areas of Special Biological Significance (ASBS); rare and endangered species; marine habitat; fish spawning and shellfish harvesting.

In order to protect the beneficial uses, the Ocean Plan establishes water quality objectives and a program of implementation. Requirements of this Order implement the Ocean Plan.

4. **Alaska Rule.** On March 30, 2000, USEPA revised its regulation that specifies when new and revised state and tribal water quality standards (WQS) become effective for CWA purposes (40 CFR 131.21, 65 FR 24641, (April 27, 2000).) Under the revised regulation (also known as the Alaska Rule), new and revised standards submitted to USEPA after May 30, 2000, must be approved by USEPA before being used for CWA purposes. The final rule also provides that standards already in effect and submitted to USEPA by May 30, 2000, may be used for CWA purposes, whether or not approved by USEPA.

5. **Stringency of Requirements for Individual Pollutants.** Individual pollutant restrictions consist of technology-based restrictions and water quality-based effluent limitations. Technology-based effluent limitations established in this Order implement the technology-based standards of Table A of the Ocean Plan. Water quality-based effluent limitations have been scientifically derived to implement water quality objectives that protect beneficial uses. Both the beneficial uses and the water quality objectives have been approved pursuant to federal law and are the applicable federal water quality standards. All beneficial uses and water quality objectives contained in the Basin Plan and the Ocean Plan were approved under state law and submitted to and approved by USEPA prior to May 30, 2000. Any water quality objectives and beneficial uses submitted to USEPA prior to May 30, 2000, but not approved by USEPA before that date, are nonetheless “applicable water quality standards for purposes of the CWA” pursuant to 40 CFR 131.21(c)(1). Collectively, this Order’s restrictions on individual pollutants are not more stringent than required to implement the technology-based requirements of the CWA and the applicable water quality standards for purposes of the CWA.

6. **Anti-degradation Policy.** Section 131.12 requires that state water quality control standards include an antidegradation policy consistent with the federal policy. The State Water Board established California’s antidegradation policy in State Water Board Resolution 68-16. Resolution 68-16 incorporates the federal antidegradation policy where the federal policy applies under the federal law. Resolution 68-16

requires that existing water quality is maintained unless degradation is justified based on specific findings.

Investigations were conducted by the Discharger to evaluate compliance with antidegradation requirements (Poseidon Seawater Desalination Facility at Huntington Beach, Antidegradation Policy Analysis, 2006). The results of these investigations indicate that there would be a slight increase in salinity concentrations as the result of discharges from the Facility but that this change would be spatially localized and confined to the mixing zone. Further, the discharges would not cause or contribute to adverse impacts on the beneficial uses of the receiving waters. Mass emission and concentration limits established in this Order are at least as stringent as those established in the previous order, and would not result in a lowering of water quality. Therefore, discharges from the Facility are consistent with the antidegradation provisions of 40 CFR 131.12 and State Water Board Resolution 68-16.

7. **Anti-Backsliding Requirements.** Sections 402(o)(2) and 303(d)(4) of the CWA and federal regulations at title 40, Code of Federal Regulations[3] section 122.44(l) prohibit backsliding in NPDES permits. These anti-backsliding provisions require that effluent limitations in a reissued permit must be as stringent as those in the previous permit, with some exceptions in which limitations may be relaxed. Effluent limitations in this Order are at least as stringent as those established in the previous Order.

D. Impaired Water Bodies on CWA 303(d) List

California's 2006 list of impaired water bodies is prepared by the State Board pursuant to Section 303(d) of the CWA. These waters are not expected to meet applicable water quality standards after implementation of technology-based effluent limitations for point sources. The Huntington Beach State Park is included in the 303d list for enterococci, indicator bacteria, and PCBs (Polychlorinated biphenyls). The nearshore and offshore zones of Huntington Beach State Park are the immediately affected receiving waters of discharges from the Facility.

E. Other Plans, Policies and Regulations

1. Clean Water Act Section 316(b) Applicability

Current CWA Section 316(b) implementing regulations are applicable to facilities that meet the definition of a Phase II existing facility at 40 CFR 125.91. Such facilities withdraw cooling water from a water of the United States; have, or are required to have, a NPDES permit; generate and transmit electric power as their

[3] *All further statutory references are to Title 40 of the Code of Federal Regulations unless otherwise indicated.*

primary business activity; have a total design intake capacity of 50 MGD or greater; and use at least 25 percent of the withdrawn water exclusively for cooling purposes. Pursuant to CWA 316(b) regulations, the HBGS is classified as a Phase II existing facility. However, pursuant to the definitions and applicability of the Phase I rule (40 CFR 125.8), the Phase II rule (40 CFR 125.9), and the proposed Phase III rule (Federal Register Vol. 69, No. 226, Wednesday, Nov. 24, 2004), the 316(b) regulations are not applicable to the Facility. Therefore, no special conditions relating to the 316(b) implementing regulations are included in this Order.

On May 4, 2010, the State Water Resources Control Board (SWRCB) adopted a Water Quality Control Policy for the use of Coastal and Estuarine Waters for Power Plant Cooling ("OTC Policy") that establishes technology-based standards to implement the federal Clean Water Act section 316(b). Section 316(b) applies specifically to cooling water intake structures used by power plants. Section 316(b) does not apply to seawater desalination facilities, including this Facility[4].

The Substitute Environmental Document (SED) for the OTC Policy adopted by the SWRCB recognizes that seawater desalination facilities and power plants that use once-through cooling technology have different operational characteristics (e.g., water intake volumes and velocities and discharge temperature and salinity). The SED also notes that power plants are different from seawater desalination facilities in terms of the Best Technology Available (BTA) for the minimization of environmental effects, as the use of seawater is secondary to the primary purpose of power production whereas it is the primary purpose of desalinated water production. The SWRCB excluded seawater desalination plants from the OTC Policy and the Policy has no direct application to the permitting of the Huntington Beach Desalination Facility. The AES Huntington Beach Generating Station must be in compliance with the State Board policy as early as December 31, 2020[5].

When operating in conjunction with the power plant (co-located scenario), the Facility will not increase the volume or the velocity of HBGS's cooling water intake, nor will it increase the number of organisms impinged and/or entrained by the HBGS's cooling water intake structure. Therefore, when the Facility is operating in co-located mode, there will be no additional impacts on marine life.

---

4 *On May 4, 2010, State Water Resources Control Board adopted a Water Quality Control Policy on the Use of Coastal and Estuarine Waters for Power Plant Cooling; Final Substitute Environmental Document, page 57.*

5 *May 4, 2010 State Water Resources Control Board Water Quality Control Policy on the Use of Coastal and Estuarine Waters for Power Plant Cooling; Final Substitute Environmental Document, page 79.*

2. **Water Code Section 13142.5(b) Applicability and Compliance**

Water Code Section 13142.5(b) requires new industrial facilities using seawater for processing to use the best available site, design, technology, and mitigation feasible to minimize the intake and mortality of all forms of marine life.

The Regional Water Board recognizes that future HBGS flows may not follow historical trends. For this reason, the Regional Water Board requires the Discharger to ensure that the requirements of Section 13142.5(b) of the Water Code are complied with when the Facility's intake requirements exceed the volume of water being discharged by the HBGS. This analysis addresses each of the following provisions of Water Code Section 13142.5(b) for temporary stand-alone Facility operations:

a. Determines the best available **SITE** feasible to minimize Facility related effects to marine life;

1). The Facility will be located adjacent to HBGS and will use HBGS's existing intake and discharge infrastructure, which draws cooling water from the Pacific Ocean and discharges into the Pacific Ocean.

2). The Impingement and Entrainment studies at HBGS demonstrate estimated levels of proportional mortality that are much less than the estimates from other coastal power plants in California. This is attributed to the location of the Facility along a fairly homogeneous stretch of coastline dominated by sandy habitat that provides less diverse habitat for fishes than rocky coastal or estuarine areas where some of the other facilities are located. In the vicinity of the HBGS's intake and outfall, there are no Areas of Special Biological Significance (ASBS), no Marine Life Protection Areas (MLPA) and no state or federal threatened or endangered species that are expected to be affected by the Facility's seawater intake or discharge.

3). The Discharger has defined fundamental project objectives for the Facility including: (1) to use proven technology to affordably provide a local and reliable source of water not subject to the variations of drought or political or legal constraints; (2) to reduce local dependence on imported water; and (3) to meet the Facility's planned contribution of desalinated water as a component of satisfying regional water supply planning goals.

4). Co-locating the Facility with HBGS allows the Facility to use the existing HBGS intake and discharge infrastructure. Using HBGS's existing intake and discharge infrastructure allows the Facility to minimize the intake and mortality of marine life by reducing the amount of source water required to be withdrawn directly from the Pacific Ocean for its purposes by using water discharged by HBGS.

5). The HBGS's intake pipe is a 14-foot diameter conduit that is capable of transporting more than four times the volume of water required by the Facility. The use of the existing pipe allows for lower intake velocities when used by the Facility, which will result in less impingement effects.

6). By co-locating with the HBGS, the Facility will use the waste stream discharged by the HBGS as its first source of water. The discharge of the HBGS wastewater to the Pacific Ocean is subject to Regional Water Board Order No. R8-2006-0011 (NPDES CA00001163), issued to AES Huntington Beach L.L.C. The Discharger's beneficial reuse of HBGS's discharge water recycles, conserves, and reuses water recycling expressly, which is encouraged by the State of California (see e.g., Water Code Section 461). This beneficial reuse also reduces the amount of HBGS wastewater discharged under R8-2006-0011.

7). Using the HBGS's existing intake and discharge infrastructure also eliminates the need for new construction of major intake and discharge facilities and avoids corresponding environmental impacts and economic costs.

8). In addition to the HBGS site, the Discharger considered sites within the City of Huntington Beach that were deemed by the City to be infeasible. Three alternative sites in Orange County were also considered that could accommodate the proposed desalination project. These sites included: the mouth of San Juan Creek (within the City of Dana Point), San Onofre (within San Diego County), and along the coast of the City of San Clemente. These alternative sites in Orange County are deemed infeasible for the following reasons:

(a) San Juan Creek – requires the construction of a new ocean intake/outfall that would cause avoidable ocean water quality, coastal resource and marine life impacts; sensitive surrounding land uses that could cause incompatibility issues (i.e., noise and aesthetics).

(b) San Onofre – requires co-location in proximity to existing nuclear power plant facilities; presents engineering and land acquisition issues.

(c) San Clemente – requires the construction of a new ocean intake/outfall that would cause avoidable ocean water quality coastal resource and marine life impacts; sensitive surrounding land uses that could cause incompatibility issues (i.e., noise and aesthetics).

9). The Facility's certified Subsequent Environmental Impact Report (SEIR) found there were no other feasible and environmentally-superior sites.

10). Providing water at a competitive cost represents another fundamental objective of the Project. Alternative sites would require the construction of a new form of seawater intake system. The construction of a new seawater

intake system of any type including beach wells or a seafloor infiltration gallery (see City of Huntington Beach 2010 SEIR Findings, and 2011 Water Global Consulting Evaluation of Alternative Desalination Plant Subsurface Technologies) would be cost prohibitive and increase the cost of production of the water well above the cost of imported supplies.

11). Pursuant to Water Code Section 13142.5(b), the Regional Water Board finds that there are no better alternative and feasible sites available for the Facility and that the HBGS site is the best available site feasible to minimize intake and mortality to marine life during operations of the Facility.

b. Determines the best available **DESIGN** feasible to minimize Facility related effects to marine life;

1). The primary design feature of the Facility is the direct connection of the desalination plant to the HBGS's cooling water system pipelines after the intake water is screened. This design feature allows the Facility to use the power plant screened water as both source water for the seawater desalination plant and as a blending water to reduce the salinity of the desalination facility concentrate prior to discharging to the ocean. Under temporary stand-alone operations, the Discharger has little control over the intake structure.

2). The Facility's use of an existing offshore deep water intake is a design feature that minimizes entrainment and impingement effects due to the location of the plant's offshore intake along a fairly homogeneous stretch of coastline dominated by sandy habitat that provides mush less habitat for fishes than nearshore rocky coastal or estuarine areas[6].

3). When operating in a temporary stand-alone mode, the volume and velocity of the Facility's flows through the inlet (bar racks) and fine screens will be less than HBGS's permitted flows at these locations.

4). Under temporary stand-alone operations, the Discharger has little control over the intake structure. Under these conditions, the existing intake meets the best available design criteria. Pursuant to Water Code Section 13142.5(b), the direct connection of the desalination plant to the HBGS's cooling water system pipelines represents the best available design feasible to minimize intake and mortality to marine life from the Facility's temporary stand-alone operations. Because different and/or better designs may be feasible in the future under long-term stand-alone operations, the Regional Water Board will reevaluate the Facility's compliance with Water Code section 13142.5(b), best design available requirement, under those conditions.

[6] *Entrainment and Impingement Effects from Operation of the Huntington Beach Desalination Facility in Stand-alone Mode, Tenera Environmental, February 2011,*

c. Determines the best available **TECHNOLOGY** feasible to minimize Facility related effects to marine life;

1). Because the Facility will be co-located with the HBGS, technological modifications to the existing intake channel to minimize the intake and mortality of marine life must be compatible with the operations of both HBGS and the Facility. In addition, the Amendment of Lease PRC 1980.1 [State Lands Commission lease with AES Huntington Beach L.L.C. I (HBGS operator)] to authorize the Facility's use of the intake and outfall provides that entrainment and impingement minimization measures cannot interfere with, or interrupt ongoing power plant operations.

2). The HBGS's seawater intake structure extends approximately 1,800 feet offshore and consists of a vertical riser with a horizontal velocity cap supported approximately 5 feet above the opening to the cooling water conduit. The velocity cap is one technology recommended by the State Water Board for minimizing impingement effects in order to comply with the Water Quality Control Policy for the use of Coastal and Estuarine Waters for Power Plant Cooling[7]. Studies on the effectiveness of the HBGS's velocity cap have shown impingement reductions as high as 90%[8]. No physical changes to the intake structure are proposed or required, and the velocity cap would remain in place during the Facility's temporary stand-alone operations.

3). The Facilities use of the HBGS' existing intake structure as a stand-alone operation at a reduced flow rate of 126.7 MGD and the elimination of heat treatment will result in a 92% reduction in fish impingement compared to the HBGS' impingement losses[9].

4). Located in the ocean, the velocity cap currently has large mammal exclusion bars which are vertical bars spaced approximately 12 inches on center. New additional fiberglass rods have been installed by the HBGS, reducing the opening to less than 9.

5). A number of alternative seawater intake technologies were analyzed and investigated. This analysis included the following intake alternatives: (1) subsurface intake (vertical, horizontal and slant beach wells and seafloor infiltration galleries); (2) modifications to the existing HBGS's intake system; and (3) installation of variable frequency drives (VFDs) on seawater intake pumps.

---

7 *Water Quality Control Policy For The Use Of Coastal And Estuarine Waters For Power Plant Cooling, Final Substitute Environmental Document (SED pg. 100)*

8 *Id.*

9 2011 *Arcadis Evaluation of Alternative Intake Technologies for the Reduction of Impingement and Entrainment Mortality*

Subsurface Intake Alternatives

6). The Facility's certified SEIR and 2011 Water Global Consulting Evaluation of Alternative Desalination Plant Subsurface Technologies, includes a site-specific technical analysis of the feasibility of the use of alternative subsurface intakes (e.g., beach wells and seafloor infiltration gallery) for the Facility. Based on this analysis, the Regional Water Board finds that the alternative intakes that were evaluated are technologically infeasible and/or environmentally inferior for the following reasons:

a) The Talbert Aquifer transmissivity and storativity characteristics limit the individual capacity of intake wells to 2.2 to 5 MGD and constrain the use of subsurface intakes for extraction of the source water volume required for the Facility.

b) Beach wells (i.e., vertical, horizontal and slant) require service roads, collector pipelines to move the water to the desalination facilities and power supplies. The construction and operation of these facilities would produce significant aesthetic and coastal resources impacts, while limiting public access to the beachfront and increasing the Facility's seawater intake energy consumption.

c) The construction and operation of beach wells would permanently disrupt the Huntington State Beach and limit public access over several miles:
   (1) Vertical wells – 72 wells each with 2.2 MGD capacity require 2.0 miles of beachfront to collect and transport the source water to the Facility.
   (2) Horizontal wells – 32 intake wells each with 5 MGD capacity require 2.3 miles of beachfront to collect and transport the source water to the Facility.
   (3) Slant wells – 30 intake wells each with 4.3 MGD capacity require 4.0 miles of beachfront to collect and transport the source water to the Facility.

d) A seafloor infiltration gallery sized for the Facility would impact approximately 64 acres of benthic habitat and beachfront.
   (1) Seafloor filtration bed 1.25 miles in length and 200 ft wide and 6 feet deep and would disturb approximately 30 acres of seafloor.
   (2) An additional 30 acres of seafloor would also need to be excavated to a depth of 6 feet to lay the 33 connector pipes from the shore through the surf zone to the filter bed.
   (3) The 33 collector pipelines would be connected to 33 wells located on the beach and would need to be connected to an electrical supply and service roads for regular maintenance.
   (4) The wells would pump the seawater to the desalination facility via a newly constructed pipeline (one mile long, ranging from 24 to 72 inches in diameter). Each of the 33 wells would require approximately

2,800 square feet of beachfront property, for a combined loss of over 2.1 acres of beachfront property and related impact to public access. The collection pipeline would require an easement over 1.5 additional acres of shoreline.

e) Infiltration galleries result in significantly larger environmental impacts as compared to vertical, horizontal and slant wells because of the significantly larger soil excavation volume that is associated with the construction of infiltration galleries and the destruction of the benthic flora and fauna over the entire intake footprint.

f) Energy demands associated with conveyance of source seawater from the infiltration gallery to the Facility are comparable to those of the other subsurface intakes and are approximately 2 times greater than what is required to collect intake water from the HBGS's existing seawater intake system.

g) The potential long-term adverse environmental impacts associated with the dewatering of the adjacent Talbert, Brookhurst, and Magnolia Marshes due to the operation of subsurface intake wells. Long-term dewatering could result in irreversible damage to the marshes and negate years of restoration measures.

h) Poor water quality of the aquifer, in terms of lack of oxygen, and elevated ammonia, iron, manganese, and bacterial contamination.

i) Possible interception of contaminated groundwater from nearby Ascon Landfill, which could introduce carcinogenic hydrocarbons into the source water for the Facility.

j) Possible interception of injection water from Talbert Barrier by the intake which may impair the function of this barrier to protect against seawater intrusion to the groundwater basin and may direct reclaimed water into the intake.

k) Potential subsidence of public roads and structures from potential drawdown of the groundwater table.

l) Impairment to the aesthetics of the coastal shore by any above ground structures and roads.

The alternative subsurface intake systems were determined not to be the environmentally preferred alternatives. Taking into account economic, environmental and technological factors, the Regional Water Board finds that the alternative subsurface intakes are not feasible.

Modifications to the Existing Intake System

7). A number of modifications to the existing intake system technologies were analyzed and investigated. The 2011 Arcadis Evaluation of Alternative Intake Technologies for the Reduction of Impingement and Entrainment Mortality analysis compared screening technologies including: (a) Fish nets, light, acoustic and air bubble barriers upstream of the existing intake; (b) New screening technologies (e.g. wedge wire screens) to replace the existing velocity cap and mammal exclusion bars; and (c) fine mesh vertical traveling screens.

a) Barriers - Based upon the Comprehensive Demonstration Study for the HBGS, light, sound, air bubbles and other behavioral barrier technologies have been proven to be species-and site-specific and are most effective on Alosids, which are not impinged at HBGS. Due to the site and species specific results for behavioral barrier effectiveness in reducing impingement and the lack of positive results with those species that are impinged at HBGS, behavioral barriers are not considered a viable option for the Facility.

b) Screening technologies to replace existing velocity cap - To achieve a reduction in impingement and entrainment mortality based on the species collected at HBGS, it would be necessary to replace the existing velocity cap with cylindrical wedgewire screens with a 0.5 mm slot width. An installation of 0.5 mm slot cylindrical wedgewire screens at a large offshore seawater intake has never been constructed in the United States and while several site-specific pilot studies are underway along the California coast, no conclusive results have been produced to date. No operational experience exists on which to base a high probability of success. For these reasons, offshore fine slot wedgewire screens are not considered to be a feasible alternative for this site.

c) Fine vertical traveling screens - Replacing the existing 3/8 inch (9.5 mm) mesh intake screens with fine mesh modified Ristroph screens and a fish return system at the HBGS would impact the current operation of the HBGS and is therefore infeasible. Once the Facility begins stand-alone operation, the use of fine mesh modified Ristroph screens and a fish return system could prove technologically feasible; however, would only provide a very small incremental reduction in impingement mortality and the survival of the eggs and larvae that are prevented from being entrained is anticipated to be very low. Therefore, the use of fine mesh screens will provide very little benefit for the nearly $10 million in construction costs. When considering economics and environmental benefits, fine mesh modified Ristroph screens are not at this point in time a feasible technology for minimizing impingement and entrainment effects from the operation of the Facility.

Implementation of the alternatives associated with the modification of the existing HBGS' intake and screening facilities were infeasible because they are unproven on such a large scale in ocean water conditions or would interfere with, or interrupt, power plant scheduled operations. HBGS' intake screening alternatives are not capable of being accomplished in a successful manner within a reasonable period of time.

Taking into account economic, environmental and technological factors, the Regional Water Board finds that the modifications to the existing intake system are not feasible.

Installation of Variable Frequency Drive (VFD) on Facility Seawater Intake Pump Station

8). The Regional Water Board finds that the installation of VFDs on the Facility intake pump station is a feasible impingement, entrainment and flow reduction technology measure for the site-specific conditions of the Facility. The Facility intake pump station will be equipped with a VFD system to closely control the volume of the collected seawater. As water demand decreases during certain periods of the day and the year, the VFD system will reduce the intake pump motor speed and decrease intake pump flow to the minimum level needed for water production. The installation of a VFD system at the intake pump station could reduce the total intake flow of the desalination plant compared to constant speed design, resulting in the proportional decrease in entrainment associated with desalination plant operations. In addition, by reducing the intake flow and velocity, the Facility will further minimize any potential for impingement. Under these circumstances, the Discharger has identified the installation of VFDs as the best technology feasible to minimize the intake and mortality of marine life at this time.

9). Pursuant to Water Code Section 13142.5(b), the Regional Water Board finds that the proposed technology for the Facility is the best available technology feasible to minimize intake and mortality to marine life under temporary stand-alone operations. Because different and/or better technologies may be feasible in the future under long-term stand-alone operations, the Regional Board will reevaluate the Facility's compliance with the best technology available requirements of Water Code section 13142.5(b) under those conditions.

d. Determines the best available **MITIGATION** measures feasible to minimize Facility related effects to marine life.

1). **Facility Temporary Stand-Alone operation.** In May 2001, the CEC granted an emergency certification for the retooling and restarting of HBGS Units 3 and 4, which had been retired in 1995. As part of that emergency process, the

CEC conditions of approval included a requirement that AES pay for a study to determine the actual impingement and entrainment losses resulting from the operation of the HBGS once-through cooling water system. This study (the "AES Huntington Beach L.L.C. Generating Station Entrainment and Impingement Study") was completed in April 2005. Data from this study were used to evaluate impingement and entrainment effects of the Huntington Beach Seawater Desalination Project at Huntington Beach.

Working together with the California Department of Fish and Game, the California Coastal Commission, the Santa Ana RWQCB, and National Marine Fisheries Service, the California Energy Commission determined that impacts to marine species resulting from the operation of HBGS Units 3 and 4 (seasonally adjusted annual flow rate of 253.4 MGD) would be mitigated by AES's funding of the purchase, restoration, and maintenance of 66.8 acres of tidal wetlands. The restoration of the tidal wetlands was completed in 2009 and maintenance is ongoing.

In 2010, the CEC granted AES a 10-year license extension for HBGS units 3 and 4, an extension that was conditioned upon the continued funding for the maintenance of the 66.8-acre restored tidal wetlands to ensure there are no unmitigated marine life-related effects due to entrainment at HBGS units 3 and 4.

Pursuant to the State Water Board's 2010 "Water Quality Control Policy For The Use Of Coastal And Estuarine Waters for Power Plant Cooling," HBGS must implement measures to mitigate the interim impingement and entrainment impacts resulting from the cooling water intake structure until HBGS decommissions its cooling water system. This requirement ensures through the continued maintenance of the HBGS' wetlands mitigation program, or any potential alternative HBGS mitigation program, that during temporary stand-alone operations, sufficient impingement and entrainment mitigation has already been implemented by HBGS for the Facility's operation.

When operating in temporary stand-alone mode, the Facility's intake flow will be approximately 126.7 MGD – a volume which is less than HBGS's currently permitted intake flow of 514 MGD. The Facility's reduced intake flow rate will reduce the existing permitted intake volume, velocity, temperature and number of organisms impinged and entrained from the ocean waters. HBGS has provided for marine life mitigation for more than a 12-M average flow of 126.7 MGD, and it will continue to provide for such mitigation until it permanently ceases to use the once-through cooling water system or permanently stops generating electricity. As a result, the marine life effects of the Facility's temporary stand-alone operation should not require additional marine life mitigation. To ensure that any entrainment and/or impingement effects have been minimized in accordance with California Water Code Section 13142.5(b), the Facility will cap its temporary, stand-alone flows to a

12-month running average that shall not exceed the available mitigation credits, or the Discharger otherwise shall provide sufficient mitigation, as determined by the Executive Officer.

The Regional Water Board finds that when the Facility is operating in a temporary stand-alone mode as described herein, all marine life related effects are mitigated. The Regional Water Board further finds that, while operating in temporary stand-alone mode, the Facility is in compliance with California Water Code Section 13142.5(b) and meets the requirements of best available mitigation to minimize the intake and mortality of marine life.

If AES were to stop supporting the marine life mitigation program to offset all entrainment-related effects on marine life, the Discharger would be required to fund AES's existing 66.8-acre tidal wetlands mitigation program under the direction of the Huntington Beach Wetlands Conservancy, or to incorporate mandated feasible design or technology features capable of reducing or eliminating such entrainment-related effects and thereby reducing or eliminating the requirement to fund the marine life mitigation program.

2). **Long-Term Stand-Alone Operations.** If HBGS permanently ceases operations of its once-through cooling water system and/or if it were to permanently stop generating electricity at the current site, the Discharger would independently operate the seawater intake and outfall for the Facility. The amount of the Facility's intake flow would be less than the currently permitted HBGS intake flow (i.e., 514 MGD), which would reduce the existing intake volume, velocity, temperature and impingement and entrainment-related effects. In order to ensure R8-2011-0046 requirements, the Facility's average annual seawater intake flow rate will be 126.7 MGD.

On October 29, 2010, the California State Lands Commission approved a lease amendment authorizing the Discharger's use of HBGS's existing offshore seawater intake and discharge facilities. If the HBGS's cooling water system were permanently decommissioned, the Lease Amendment requires the Discharger to maintain AES's existing marine life mitigation program. By funding the existing marine life mitigation program, the Discharger would compensate for any marine life-related effects that might be associated with the Facility's long-term stand-alone operations.

If the HBGS permanently ceases operations of the once-through cooling water system and/or if HBGS permanently stops generating electricity at the current site, within 180 days of receiving such notice, the Discharger shall submit a separate Report of Waste Discharge to the Regional Water Board which evaluates any new design and technology requirements to conform with California Water Code Section 13142.5(b). Additional review will be necessary, in part, because when operating in long-term stand-alone mode, the Discharger will have more discretion and flexibility with respect to the operation of the intake structure and outfall and it will be in a position to re-

consider whether other design and/or technology features have been rendered feasible.

If AES were to discontinue support for the marine life mitigation program, the Discharger would be required to fund AES's existing 66.8-acre tidal wetlands mitigation program or to incorporate mandated feasible design or technology features capable of reducing or eliminating such entrainment-related effects, thereby reducing or eliminating the requirement to fund the marine life mitigation program.

If the Discharger submits a Report of Waste Discharge for approval of its long-term, stand-alone operations, the Regional Board will consider whether, by continuing the maintenance of AES's existing 66.8-acre tidal wetlands mitigation program, the Facility's long-term stand-alone operational scenario is in compliance with the mitigation requirements of Section 13142.5(b).

a) Impingement

(1) The proposed operation of the HBGS seawater intake system under long-term stand-alone mode would result in an estimated average daily impingement of 11 fishes weighing 0.26 kg (0.59 lb). The estimated average daily impingement rate for shellfish would be approximately 6 individuals weighing 0.09 kg (0.198 lb)[10].

(2) Impingement would not result in substantial reductions in fish or shellfish populations under long-term stand-alone operating conditions. It is not anticipated that the small amount of impingement losses would have any effect on the ability of impinged species to sustain their populations. The intake structure is not within or near an Area of Special Biological Significance (ASBS). No threatened or endangered species or kelp beds exist within the vicinity of the HBGS outfall.

(3) For long-term stand-alone operations, the total daily impingement of approximately 0.78 lbs per day (estimated impingement of fishes plus estimated impingement of shellfish) is a fraction (less than 25%) of the daily diet of one brown pelican.

(4) The Facility's use of the HBGS's existing intake structure as a stand-alone operation at a reduced flow rate of 126.7 MGD and the elimination of heat treatment will result in a 92% reduction in fish impingement compared to the HBGS's impingement losses[11].

---

[10] *Entrainment and Impingement Effects from the Operation of the Huntington Beach Desalination Facility in Stand-alone Mode; Tenera Environmental, February 2011.*

[11] 2011 *Arcadis Evaluation of Alternative Intake Technologies for the Reduction of Impingement and Entrainment Mortality*

b) Entrainment

(1) The Facility's entrainment was projected using the Empirical Transport Model ("ETM"), which is a widely used model to estimate mortality rates resulting from water intake systems. Potential entrainment was assessed by comparing the numbers of larvae entrained with the numbers of larvae at risk of entrainment in the source waters to obtain an estimate of the proportional mortality caused by entrainment.

(2) Proportional Mortality (Pm) represents the percentage of the population of a marine species in a given water body that will be drawn in and entrained by a water intake system. The Pm ratio is calculated by dividing (a) the number of larvae that are entrained in a water intake system by (b) the number of larvae in the same water body that are subject to entrainment (i.e., entrainable).

(3) Based on a fairly constant pumping rate with an 12-month average of 126.7 MGD, larval entrainment losses due to the long-term stand-alone operation of the Facility are projected to affect only a small fraction of the larvae (0.02–0.28%) of the source water populations of approximately 115,000,000,000 (billion) larvae.

(4) The entrainment effects associated with the Facility's stand-alone operations and fixed average annual intake flow rate of approximately 126.7 MGD would be less than the entrainment effects that are currently associated with the HBGS's Units 3 and 4 seasonally adjusted (pumping rate of up to 253. 4 MGD) larval entrainment losses.

(5) The most abundant taxon of larval fish entrained (33%) was CIQ gobies, which is comprised of three species of small, bottom-dwelling fish that are found in bays and lagoons. Nearby adult populations are concentrated in localized habitats, such as Alamitos Bay, Anaheim Bay, and Talbert Marsh, and their larvae are dispersed in these environs and transported out into coastal waters by tidal flushing and prevailing currents. These larvae would experience high rates of natural mortality at the intake location because the intake is located in an area that does not provide a suitable habitat to sustain resident adult populations, and there is a low likelihood that larvae that have been flushed into the area of the intake would be able to return to the shallow bay habitats that meet the species' life history requirements.

(6) No state or federal threatened or endangered species are expected to be impacted by the proposed Facility. The intake structure is not within or near an Area of Special Biological Significance (ASBS).

In summary, the Regional Water Board finds that the Facility's temporary stand-alone operational scenario is in compliance with California Water Code Section 13142.5(b) as it employs the best site, design, technology and mitigation feasible to minimize the intake and mortality of marine life (see table F-7).

Table F-7. Design, Technology, and Mitigation Measures to Minimize Impacts to Marine Life

Category		Operational Scenario	Feature	Result
1. Site	1.1	Temporary Stand-Alone	Proposed location at Huntington Beach Generating Station (HBGS)	Best available site for the project, no feasible and less environmentally damaging alternative locations.
	1.2	Temporary Stand-Alone	Proposed location at Huntington Beach Generating Station (HBGS)	No Areas of Special Biological Significance (ASBS), no Marine Life Protection Areas (MLPA) and no state or federal threatened or endangered species in the vicinity of the HBGS's intake and outfall.
2. Design	2.1	Temporary Stand-Alone	Connection to HBGS Discharge Pipeline	Screened water to reduce entrainment of marine organisms
	2.2	Temporary Stand-Alone	Reduction in inlet screen velocity	Reduction of impingement of marine organisms
	2.3	Temporary Stand-Alone	Connection to HBGS Discharge Pipeline	Deep water, offshore intake
	2.4	Temporary Stand-Alone	Reduction in fine screen velocity	Reduction of impingement of marine organisms
3.Technology	3.1	Temporary Stand-Alone	Intake velocity cap	Reduction of impingement of marine organisms
	3.2	Temporary Stand-Alone	Installation of VFD on Facility intake pumps	Reduce the total intake flow for the desalination facility to no more than that needed at any given time, thereby minimizing the entrainment of marine organisms.
4. Mitigation	4.1	Temporary Stand-Alone	Maintenance of existing 66.8 acres of wetlands mitigation for operation of 126.7 MGD intake	Compensates for unavoidable entrainment and impingement impacts and enhances the coastal environment.

IV. RATIONALE FOR EFFLUENT LIMITATIONS AND DISCHARGE SPECIFICATIONS

The CWA requires point source discharges to control the amount of conventional, non-conventional, and toxic pollutants that are discharged into the waters of the United States. The control of pollutants discharged is established through effluent limitations and other requirements in NPDES permits. There are two principal bases for effluent limitations in the Code of Federal Regulations: section 122.44(a) requires that permits include applicable technology-based limitations and standards; and section 122.44(d) requires that permits include water quality-based effluent limitations to attain and maintain applicable numeric and narrative water quality criteria to protect the beneficial uses of the receiving water. Where numeric water quality objectives have not been established, three options exist to protect water quality: 1) 40 CFR Section 122.44(d) specifies that WQBELs may be

established using USEPA criteria guidance under CWA section 304(a); 2) proposed State criteria or a State policy interpreting narrative criteria supplemented with other relevant information may be used; or 3) an indicator parameter may be established.

A. Discharge Prohibitions

Discharge Prohibitions in this Board Order are based on the Federal Clean Water Act, Basin Plan, State Water Resources Control Board's plans and policies, California Ocean Plan, and U.S. Environmental Protection Agency guidance and regulations.

B. Technology-Based Effluent Limitations

1. Scope and Authority

Section 301(b) of the CWA and implementing USEPA permit regulations at section 122.44, title 40 of the Code of Federal Regulations, require that permits include conditions meeting applicable technology-based requirements at a minimum, and any more stringent effluent limitations necessary to meet applicable water quality standards. The discharge authorized by this Order must meet minimum federal technology-based effluent limitations (TBELs) based on Table A of the California Ocean Plan and/or Best Professional Judgment (BPJ) in accordance with Part 125, section 125.3.

The CWA requires that technology-based effluent limitations be established based on several levels of controls:

a. Best practicable treatment control technology (BPT) represents the average of the best performance by plants within an industrial category or subcategory. BPT standards apply to toxic, conventional, and nonconventional pollutants.

b. Best available technology economically achievable (BAT) represents the best existing performance of treatment technologies that are economically achievable within an industrial point source category. BAT standards apply to toxic and nonconventional pollutants.

c. Best conventional pollutant control technology (BCT) represents the control from existing industrial point sources of conventional pollutants including BOD, TSS, fecal coliform, pH, and oil and grease. The BCT standard is established after considering the "cost reasonableness" of the relationship between the cost of attaining a reduction in effluent discharge and the benefits that would result, and also the cost effectiveness of additional industrial treatment beyond BPT.

d. New source performance standards (NSPS) represent the best available demonstrated control technology standards. The intent of NSPS guidelines is to set limitations that represent state-of-the-art treatment technology for new sources.

The CWA requires USEPA to develop effluent limitations, guidelines and standards (ELGs) representing application of BPT, BAT, BCT, and NSPS. Section 402(a)(1) of the CWA and section 125.3 of the Code of Federal Regulations authorize the use of best professional judgment (BPJ) to derive technology-based effluent limitations on a case-by-case basis where ELGs are not available for certain industrial categories and/or pollutants of concern. Where BPJ is used, the permit writer must consider specific factors outlined in section 125.3.

2. **Applicable Technology-Based Effluent Limitations**

Table A of the Ocean Plan establishes technology-based effluent limitations for POTWs and industrial discharges for which effluent limitation guidelines have not been established (including the discharge of concentrated seawater from the desalination facility). Order No. R8-2011-0046 established numeric effluent limitations based on Table A of the Ocean Plan at Discharge Point 001.

Table A of the Ocean Plan requires dischargers to, as a monthly average, remove 75 percent of suspended solids from the influent stream before discharging wastewater to the Pacific Ocean, except that the effluent limitation to be met shall not be less than 60 mg/L. Because the seawater desalination facility is not a POTW, an effluent limitation of 60 mg/L is more appropriate and has been established for the desalination facility discharge. The technology-based effluent limitations from the Ocean Plan are summarized below in Table F-8.

Table F-8. Summary of TBELs on Table A of the Ocean Plan

Parameter	Units	Effluent Limitations			
		Monthly Average	Weekly Average	Instantaneous Minimum	Instantaneous Maximum
Oil & grease	mg/l	25	40	--	75
	lbs/day	11,800	18,900	--	
Total Suspended Solids	mg/l	60[a]	--	--	--
	lbs/day	28,300	--	--	--
Settleable solids	ml/l	1.0	1.5	--	3.0
Turbidity	NTU	75	100	--	225
pH	pH units	--	--	6.0	9.0

a. Table A of the Ocean Plan requires dischargers to, as a monthly average, remove 75% of suspended solids from the influent stream before discharging wastewater to the Pacific Ocean, except that the effluent limitation to be met shall not be less than 60 mg/L. Because this Facility is not a POTW, an effluent limitation of 60 mg/L is appropriate and established for the Facility's discharge.

C. Water Quality-Based Effluent Limitations (WQBELs)

1. Scope and Authority

Section 301(b) of the CWA and section 122.44(d) require that permits include limitations more stringent than applicable federal technology-based requirements where necessary to achieve applicable water quality standards.

Section 122.44(d)(1)(i) mandates that permits include effluent limitations for all pollutants that are or may be discharged at levels that have the reasonable potential to cause or contribute to an exceedance of a water quality standard, including numeric and narrative objectives within a standard. Where reasonable potential has been established for a pollutant, but there is no numeric criterion or objective for the pollutant, water quality-based effluent limitations (WQBELs) must be established using: (1) USEPA criteria guidance under CWA section 304(a), supplemented where necessary by other relevant information; (2) an indicator parameter for the pollutant of concern; or (3) a calculated numeric water quality criterion, such as a proposed state criterion or policy interpreting the state's narrative criterion, supplemented with other relevant information, as provided in section 122.44(d)(1)(vi).

The process for determining reasonable potential and calculating WQBELs when necessary is intended to protect the designated uses of the receiving water as specified in the Basin Plan, and achieve applicable water quality objectives and criteria that are contained in other state plans and policies, or any applicable water quality criteria contained in the Ocean Plan.

2. Applicable Beneficial Uses and Water Quality Criteria and Objectives

Applicable beneficial uses designated within the Basin Plan and Ocean Plan are listed in Tables F-5 and F-6 within Section III.C., above.

The following water quality objectives listed below from Table B, Page 7 of the California Ocean Plan are established for the protection of marine aquatic life. The Ocean Plan also establishes receiving water standards for acute and chronic toxicity to protect marine aquatic life. Additionally, the Ocean Plan establishes water quality objectives for the protection of human health for 20 non-carcinogenic and 42 carcinogenic compounds.

Table F-9. Ocean Plan Table B Receiving Water Standards for the Protection of Marine Aquatic Life

OBJECTIVES FOR THE PROTECTION OF AQUATIC LIFE				
Parameters	**Limiting Concentrations**			
	Units of Measurement	**6-Month Median**	**Daily Maximum**	**Instantaneous maximum**
Arsenic	µg/L	8	32	80
Cadmium	µg/L	1	4	10
Chromium (Hexavalent)	µg/L	2	8	20
Copper	µg/L	3	12	30
Lead	µg/L	2	8	20
Mercury	µg/L	0.04	0.16	0.4
Nickel	µg/L	5	20	50
Selenium	µg/L	15	60	150
Silver	µg/L	0.7	2.8	7
Zinc	µg/L	20	80	200
Cyanide	µg/L	1	4	10
Total Residual Chlorine	µg/L	2	8	60
Ammonia (Expressed as Nitrogen)	µg/L	600	2400	600
Chronic Toxicity	TUc	N/A	1	N/A
Phenolic Compounds (non-chlorinated)	µg/L	30	120	300
Chlorinated Phenolics	µg/L	1	4	10

3. Determining the need for WQBELs

Order No. R8-2006-0034 contained effluent limitations based on implementing Ocean Plan Table B receiving water standards for non-conventional and toxic pollutants. The Facility is not operational, and no effluent data are presently available. Pilot plant effluent data developed using HBGS effluent were presented within the Discharger's Report of Waste Discharge. The pilot plant data indicate that no measurable concentrations of Table B compounds will be present in the discharge. The seawater desalination operations result in returning influent seawater

constituents back to the ocean. The Discharger adds no measurable quantities of Table B toxic compounds to the ocean, and does not result in an increase in mass emissions of toxic constituents to the ocean over and above compounds that are within the HBGS cooling water effluent. For these reasons, effluent limitations are established in this Order for those constituents which are regulated by effluent limitations established within the AES HBGS NPDES permit. Effluent limits are established based on the water quality objectives listed in Table B, page 7 of the California Ocean Plan.

4. **WQBEL Calculations**

a. **Concentration Calculation**

Table B of the Ocean Plan includes water quality objectives for the protection of marine aquatic life and these objectives are used to establish effluent limits for discharges from this Facility.

The Ocean Plan takes into account the “minimum probable initial dilution” in determining effluent limitations for toxic pollutants. Initial dilution is the process that results in the rapid and irreversible turbulent mixing of wastewater with ocean water around the point of discharge. For the purposes of the Ocean Plan, minimum initial dilution is the lowest average initial dilution within any single month of the year. Dilution estimates must be based on observed waste flow characteristics, observed receiving water density structure, and the assumption that no currents of sufficient strength to influence the initial dilution process flow across the discharge structure. In March 1980, the State Board investigated the initial dilution factor for the power plant ocean outfalls throughout the State. The State Board assigned an “initial dilution” factor of 7.5:1 to AES (Huntington Beach generating station outfall). Since the Discharger is utilizing AES cooling water discharges and is discharging to the same outfall utilized by AES HBGS, it is a conservative approach to apply this dilution factor in establishing effluent limitations for discharges from this Facility.

To establish effluent limits for discharges from this Facility, a minimum probable initial dilution of 7.5 to 1 is used.

The following equation from Section III.C.4.a. of the Ocean Plan was used to calculate all concentration-based, effluent limitations (except for instantaneous maximum total residual chlorine).

$$Ce = Co + Dm\ (Co - Cs)$$

Where:
Ce = the effluent concentration limit, µg/L
Co = the concentration (water quality objective) to be met at the completion of initial dilution, µg/L
Cs = background seawater concentration, µg/L

Dm = minimum probable initial dilution expressed as parts seawater per part wastewater.

Background seawater concentration for all Table B parameters was assumed to be zero (Cs = 0), except for the following five parameters (see Table C, Page 14 of Ocean Plan)

Table F-10. Pollutant Background Concentrations

Constituent	Background Seawater Concentration, Cs (µg/L)
Arsenic	3
Copper	2
Mercury	0.0005
Silver	0.16
Zinc	8

Examples:

The following water quality objectives taken from Table B of ocean plan for copper, lead and total chlorine residual were used to establish effluent limits:

Table F-11. Example Ocean Plan Table B Receiving Water Objectives

Pollutant (Co)	6-Month Median	Daily Maximum	Instantaneous Maximum
Copper (µg/L)[1)]	3	12	30
Lead (µg/L)[2)]	2	8	20
Total Chlorine Residual (µg/L)	2	8	60

1) Copper is an example of an Ocean Plan Table B parameter that contains a background seawater concentration (see Table F-10 above).
2) Lead is an example of an Ocean Plan Table B parameter for which it is assumed that the background seawater concentration is zero.

Using the equation, Ce = Co + Dm (Co – Cs), effluent limitations are calculated:

- *Copper*
  Ce = 3 + 7.5 (3 – 2) = 11 µg/L (6-Month Median)
  Ce = 12 + 7.5 (12 – 2) = 87 µg/L (Daily Maximum)
  Ce = 30 + 7.5 (30 – 2) = 240 µg/L (Instantaneous Maximum)

- *Lead*
  Ce = 2 + 7.5 (2 – 0) = 17 µg/L (6-Month Median)
  Ce = 8 + 7.5 (8 – 0) = 68 µg/L (Daily Maximum)
  Ce = 20 + 7.5 (20 – 0) = 170 µg/L (Instantaneous Maximum)

- *Total Residual Chlorine*
  Since chlorination will be conducted on an as-needed basis, which cannot be more explicitly defined, it is appropriate to adopt a conservative approach and assume that chlorination is continuous rather than intermittent. Intermittent is defined as discharges not lasting for more than two hours per day.

  Ce = 2 + 7.5 (2 – 0) = 17 µg/L (6-Month Median)
  Ce = 8 + 7.5 (8 – 0) = 68 µg/L (Daily Maximum)
  Ce = 60 + 7.5 (60 – 0) = 510 µg/L (Instantaneous Maximum)

b. **Mass-based Effluent Limitations**

Mass-based effluent limitations are established using Equation 3 listed in Section III, age 15, of the Ocean Plan.

Mass lbs/day = 0.00834 x effluent limitation (µg/L) Ce x Flow rate (MGD) Q

where: Mass = mass limitation for a pollutant (lbs/day)
Effluent limitation, Ce = concentration limit for a pollutant (µg/L)
Flow rate = discharge flow rate (MGD)

For example, in the case of copper, the 6-month median mass limit is:

0.00834 x 11 µg/L x 56.59 MGD = 5 lbs/day

c. **Summary of Water Quality-based Effluent Limitations Discharge Point 001**: The discharge of wastes shall maintain compliance with the following effluent limitations at Discharge Point 001, with compliance measured at Monitoring Location[12] as described in the attached Monitoring & Reporting Program (Attachment E).

These limits are derived from Table B (Page 7) of the California Ocean Plan using the assigned dilution factor of 7.5 and using equation (1) on Page 13 of the California Ocean Plan. The mass loading (lbs/day) is computed using 56.59 MGD of wastewater discharge, consistent with mass emission requirements established in Order No. R8-2006-0034. Mass emission rate limits are derived using Equation 3 on Page 15 of the California Ocean Plan.

[12] *Before RO effluent mixes with AES discharges*

Table F-12. Summary of WQBELs on Table B of the Ocean Plan

Parameter	Units	6-Month Median	Daily Maximum	Instantaneous Maximum
Arsenic	µg/L	46	250	660
	lbs/day	22	118	---
Cadmium	µg/L	8.5	34	85
	lbs/day	4	16	---
Chromium (Hexavalent)	µg/L	17	68	170
	lbs/day	8	32	---
Copper	µg/L	11	87	240
	lbs/day	5	41	---
Lead	µg/L	17	68	170
	lbs/day	8	32	---
Mercury	µg/L	0.34	1.36	3.4
	lbs/day	0.16	0.64	---
Nickel	µg/L	43	170	420
	lbs/day	20	80	---
Silver	µg/L	4.8	23	58
	lbs/day	2	11	---
Zinc	µg/L	110	620	1600
	lbs/day	52	290	---
Cyanide	µg/L	8.5	34	85
	lbs/day	4	16	---
Total Chlorine Residual	µg/L	17	68	510
	lbs/day	8	32	---
Ammonia-Nitrogen	µg/L	5,100	20,400	51,000
	lbs/day	2,400	9,600	---
Chronic Toxicity[1)] (See IV.C.4.e)	TUc	----	8.5	----
Phenolic Compounds[2)] (non-chlorinated)	µg/L	250	1,000	2,550
	lbs/day	120	480	---
Chlorinated Phenolics[3)]	µg/L	8.5	34	85
	lbs/day	4	16	---

Values rounded to two significant figures. To be conservative, 6-month median, daily maximum and instantaneous maximum mass emission values are computed using the monthly average seawater desalination facility flow (filter backwash, concentrated seawater and rinse water) of 56.59 MGD, consistent with mass emission requirements established in Order No. R8-2006-0034.

1) The chronic toxicity of the effluent shall be expressed and reported in TUc, where TUc = 100/NOEC. The No Observed Effect Concentration (NOEC) is the highest effluent concentration to which organisms are exposed in a chronic test, that causes no observable adverse effect on the test organisms (e.g., the highest concentration of toxicant to which the values for the observed responses are not statistically significantly different from the controls).
2) Non-chlorinated phenolic compounds represent the sum of 2,4-dimethylphenol, 4,6-dinitro-2-methylphenol,2,4-dinitrophenol, 2-methylphenol, 4-methylphenol, 2-nitrophenol, 4-nitrophenol, and phenol.

3) Chlorinated phenolic compounds represent the sum of 4-chloro-3-methylphenol, 2-chlorophenol, pentachlorophenol, 2,4,5-trichlorophenol, and 2,4,6-trichlorophenol.

5. Discharge Flow Limitation

The Order includes a requirement that the AES HBGS and/or the Facility maintain an intake minimum flow of 126.7 MGD, or reduce desalination production to ensure that the desalination discharge does not comprise more than 44.7 percent of the intake flow. The multiplier factor of 0.447 is based on 56.59 MGD divided by 126.7 MGD. The 56.59 MGD flow includes a maximum of 50 MGD of concentrated seawater, 6.3 MGD of backwash water (salinity same as seawater), and 0.29 MGD of RO concentrate solution rinse water.

If the Facility discharges less than 56.59 MGD, it may reduce the intake flow but at all times must meet the flow ratio requirement of 0.447 as described above.

6. Whole Effluent Toxicity (WET)

Ocean Plan 2005 addresses chronic and acute toxicity requirements based on minimum initial dilutions factors.

Here is the Section III.C.4.c of the Ocean Plan 2005:

"Toxicity Testing Requirements based on the Minimum Initial Dilution Factor for Ocean Waste Discharges:

(1) Dischargers shall conduct acute toxicity testing if the minimum initial dilution of the effluent is greater than 1,000:1 at the edge of the mixing zone.
(2) Dischargers shall conduct either acute or chronic toxicity testing if the minimum initial dilution ranges from 350: 1 to 1,000: 1 depending on the specific discharge conditions. The RWQCB shall make this determination.
(3) Dischargers shall conduct chronic toxicity testing for ocean waste discharges with minimum initial dilution factors ranging from 100: 1 to 350: 1. The RWQCBs may require that acute toxicity testing be conducted in addition to chronic as necessary for the protection of beneficial uses of ocean waters,
(4) Dischargers shall conduct chronic toxicity testing if the minimum initial dilution of the effluent falls below 100: 1 at the edge of the mixing zone."

As described in Section II.B above, a minimum month 7.5 to 1 initial dilution ratio is assigned to the discharge. Based on this 7.5 to 1 initial dilution ratio, chronic toxicity monitoring of the discharge is warranted per Section III.C.4.c.(4) of the Ocean Plan, and the above-listed Ocean Plan requirements III.C.4.c.(1)-(3) are not applicable to the discharge.

The Ocean Plan establishes a daily maximum receiving water toxicity objective (to be achieved upon completion of initial dilution) of 1.0 TUc (chronic toxicity units).

Calculations for Chronic Toxicity:

The equation is:

Ce = Co + Dm (Co – Cs), effluent limitation is calculated as
Ce = 1 + 7.5 (1 - 0) = 8.5 TUc (Daily Maximum)

Where:

Ce = the effluent concentration limit, µg/L
Co = the concentration (water quality objective) to be met at the completion of initial dilution, µg/L
Cs = background seawater concentration, µg/L
Dm = minimum probable initial dilution expressed as parts seawater per part wastewater.

No acute toxicity requirement or monitoring is warranted per Section III.C.4 of the Ocean Plan. Additional factors considered by the Regional Water Board in not establishing acute toxicity monitoring or acute toxicity effluent requirements include:

- The discharge returns constituents that occur in natural seawater back to the ocean and does not increase mass emissions of toxic compounds.
- Effluent data submitted by the discharger based on pilot plant testing indicate that the discharge will comply with all Ocean Plan Table B standards for toxic constituents.
- The Ocean Plan does not establish any numerical discharge concentrations standards for salinity. Exposure to the estimated salinity concentrations should have no observable effects on marine life or habitat.
- This permit implements a requirement that the discharge not comprise more than 44.7 percent of the total intake flow in order to prevent adverse salinity-related effects and to ensure conformance with Ocean Plan narrative and numerical toxicity objectives.
- The area within Zone of Initial Dilution with elevated salinity is small.
- Under minimum oceanographic mixing conditions with a probability of occurrence of less than 1 percent, hydrodynamic modeling conducted by Dr. Scott Jenkins and Joseph Waysl indicated a dilution ratio of 10:1 under co-located operations (126.7 mgd heated discharge flow), and a 8:1 initial dilution under stand-alone operations (126.7 mgd cold discharge flow) at 1000 foot distance from the outlet structure. The 7.5:1 minimum month initial dilution

value implemented within this permit is more conservative and more protective than initial dilutions projected by Jenkins and Wasyl under minimum oceanographic mixing conditions. As a result, initial dilutions will typically be in excess of the minimum month dilution assigned herein.

- The Zone of Initial Dilution where there will be slightly elevated salinity levels does not include Areas of Special Biological Significance (ASBS), Marine Life Protection Areas (MLPA), state or federal threatened or endangered species or sensitive habitat (e.g. kelp beds).

D. Final Effluent Limitations

Final Effluent Limitations. Tables F-8 and F-12 summarize effluent limitations established on discharge point DP 001 by this Order. Mass emission limitations have been derived based on a flow of 56.59 MGD (50 MGD concentrated seawater, 6.3 MGD filtration backwash, and 0.29 MGD rinse water).

E. Interim Effluent Limitations (Not Applicable)

F. Land Discharge Specifications (Not Applicable)

G. Reclamation Specifications (Not Applicable)

V. RATIONALE FOR RECEIVING WATER LIMITATIONS

A. Surface Water

Receiving water limitations are based on water quality objectives contained in the Ocean Plan. As such, they are a required part in this Order.

The proposed mass effluent limits in IV.C., above are based on an average monthly wastewater flow of 56.59 million gallons of total desalination facility effluent to the ocean. Order No. R8-2006-0034 and this Order limit the Facility's total outfall discharge to a maximum of 44.7 percent of the intake flow (see Table F-2) and assign a minimum month initial dilution of 7.5 to 1.

B. Groundwater (Not Applicable)

VI. RATIONALE FOR MONITORING REPORTING REQUIREMENTS

Section 122.48 requires all NPDES permits to specify requirements for recording and reporting monitoring results. Water Code sections 13267 and 13383 authorize the Regional Water Board to require technical and monitoring reports. The Monitoring and Reporting Program (MRP), Attachment E of this Order, establishes monitoring and reporting requirements to implement federal and state requirements. The following provides the rationale for the monitoring and reporting requirements contained in the MRP for this Facility.

A. Influent Monitoring

The Discharger is required to conduct quarterly influent monitoring for the first year and annual monitoring for every year thereafter. This is to establish a baseline water quality of the intake water. This intake water is also monitored by AES HBGS as required by the NPDES permit issued to AES for discharges of once through cooling water. When available, the Discharger may use the AES effluent monitoring data to comply with the influent monitoring requirement of this Order.

B. Effluent Monitoring

The Discharger is required to conduct monitoring of the permitted discharges in order to evaluate compliance with permit conditions. Monitoring requirements are set forth in the monitoring and reporting program (Attachment E). This provision requires compliance with the monitoring and reporting program, and is based on sections 122.44(i), 122.62, 122.63 and 124.5. The self-monitoring program (SMP) is a standard requirement in all NPDES permits (including this proposed Order) issued by the Regional Water Board.

In addition to containing definitions of terms, the SMP specifies general sampling/analytical protocols and the requirements for reporting of spills, violations, and routine monitoring data in accordance with NPDES regulations, the California Water Code, and Regional Water Board's policies. The monitoring and reporting program also contains a sampling program specific to the Discharger's treatment facility. It defines the sampling stations, monitoring frequency, pollutants to be monitored, and additional reporting requirements. Pollutants to be monitored include all pollutants for which effluent limitations are specified.

Although the Discharger will be discharging wastewater at one discharge point into the ocean outfall of AES, due to intermittent discharges of in-plant waste streams (RO treatment wastewater, filter backwash wastewater, RO flush wastewater), monitoring of these waste streams will be necessary to assure that discharges will meet water quality standards. The Discharger is required to conduct monitoring for certain constituents when in-plant waste streams (RO treatment wastewater, filter backwash wastewater, RO flush wastewater) are discharged.

C. Whole Effluent Toxicity Testing

Whole effluent toxicity (WET) testing protects the receiving water quality from the aggregate toxic effect of a mixture of pollutants in the effluent. WET tests measure the degree of response of exposed aquatic test organisms to an effluent. The WET approach allows for protection of the narrative “no toxics in toxic amounts” criterion while implementing numeric criteria for toxicity. There are two types of WET tests: acute and chronic. An acute toxicity test is conducted over a shorter time period and measures mortality. A chronic toxicity test is conducted over a longer period of time and may measure mortality, reproduction, and growth.

The Basin Plan specifies a narrative objective for toxicity, requiring that all waters be maintained free of toxic substances in concentrations that are lethal to or produce other detrimental response on aquatic organisms. Detrimental response includes but is not limited to decreased growth rate, decreased reproductive success of resident or indicator species, and/or significant alterations in population, community ecology, or receiving water biota.

Per Section IV.C.4.e above, this Order requires the Discharger to conduct chronic toxicity testing of the effluent on a monthly basis. Consistent with the requirements of the prior Order, this Order also requires the Discharger to conduct an Initial Investigation Toxicity Reduction Evaluation (IITRE) program when either the two-month median of toxicity test results exceeds 8.5 TUc or any single test exceeds 14.5 TUc for survival endpoint. Based on the results of this investigation program and at the discretion of the Executive Officer, a more rigorous Toxicity Reduction Evaluation/Toxicity Identification Evaluation (TRE/TIE) may be required.

D. Receiving Water Monitoring

1. Surface Water

The receiving water monitoring program shall consist of biological surveys of the area surrounding the discharge, and shall include studies of the physical-chemical and biological characteristics of the receiving water that may be impacted by the discharge.

2. Groundwater (Not Applicable)

E. Other Monitoring Requirements (Not Applicable)

VII. RATIONAL FOR PROVISIONS

A. Standard Provisions

Standard Provisions, which apply to all NPDES permits in accordance with 40 CFR Section 122.41, and additional conditions applicable to specified categories of permits in accordance with section 122.42, are provided in Attachment D to the Order.

Section 122.41(a)(1) and (b) through (n) establish conditions that apply to all State-issued NPDES permits. These conditions must be incorporated into the permits either expressly or by reference. If incorporated by reference, a specific citation to the regulations must be included in the Order. Section 123.25(a)(12) allows the state to omit or modify conditions to impose more stringent requirements. In accordance with Section 123.25, this Order omits federal conditions that address enforcement authority specified in sections 122.41(j)(5) and (k)(2) because the enforcement authority under the Water Code is more stringent. In lieu of these conditions, this Order incorporates by reference Water Code section 13387(e).

B. Special Provisions

1. Reopener Provisions

This provision is based on 40 CFR Part 123. The Regional Water Board may reopen the permit to modify permit conditions and requirements. Causes for modifications include the promulgation of new regulations, or adoption of new regulations by the State Board or Regional Water Board, including revisions to the Basin Plan and Ocean Plan.

2. Special Studies and Additional Monitoring Requirements (Not Applicable)

3. Best Management Practices and Pollution Prevention (Not Applicable)

4. Construction, Operation, and Maintenance Specifications (Not Applicable)

5. Other Special Provisions (Not Applicable)

6. Compliance Schedules (Not Applicable)

VIII. PUBLIC PARTICIPATION

The California Regional Water Quality Control Board, Santa Ana Region (Regional Water Board) is considering the issuance of waste discharge requirements (WDRs) that will serve as a National Pollutant Discharge Elimination System (NPDES) permit for the Poseidon Resources (Surfside) L.L.C.'s Poseidon Seawater Desalination Facility at Huntington Beach. As a step in the WDR adoption process, the Regional Water Board staff has

developed tentative WDRs. The Regional Water Board encourages public participation in the WDR adoption process.

A. Notification of Interested Parties

The Regional Water Board has notified the Discharger and interested agencies and persons of its intent to prescribe waste discharge requirements for the discharge and has provided them with an opportunity to submit their written comments and recommendations. Notification was provided through the posting of the Notice of Public Hearing at the City Hall, Banning Library, Central Library, and HBGS and publication of the Notice in local newspapers; and the posting of the Notice and tentative Order on the Regional Water Board website: http://www.waterboards.ca.gov/santaana/board_decisions/tentative_orders/index.shtml on October 25, 2011.

B. Written Comments

The staff determinations are tentative. Interested persons are invited to submit written comments concerning these tentative WDRs. Comments should be submitted either in person or by mail to the Executive Office of the Regional Water Board at the address above on the cover page of this Order.

To be fully responded to by staff and considered by the Regional Water Board, written comments should be received at the Regional Water Board offices by 5:00 p.m. on November 18, 2011.

C. Public Hearing

The Regional Water Board will hold a public hearing on the tentative WDRs during its regular Board meeting on the following date and time and at the following location:

Date:	December 9, 2011
Time:	9:00 a.m.
Location:	City of Loma Linda Council Chambers 25541 Barton Road Loma Linda, CA 92354

Interested persons are invited to attend. At the public hearing, the Regional Water Board will hear testimony, if any, pertinent to the discharge, WDRs, and permit. Oral testimony will be heard; however, for accuracy of the record, important testimony should be in writing.

Please be aware that dates and venues may change. Our web address http://www.waterboards.ca.gov/santaana/board_info/agendas/ where you can access the current agenda for changes in dates and locations.

D. Waste Discharge Requirements Petitions

Any aggrieved person may petition the State Water Resources Control Board to review the decision of the Regional Water Board regarding the final WDRs. The petition must be submitted within 30 days of the Regional Water Board's action to the following address:

State Water Resources Control Board
Office of Chief Counsel
P.O. Box 100, 1001 I Street
Sacramento, CA 95812-0100

E. Information and Copying

The Report of Waste Discharge, related documents, tentative effluent limitations and special provisions, comments received, and other information are on file and may be inspected at the address above at any time between 9:00 a.m. and 3:00 p.m. Monday through Friday. Copying of documents may be arranged through the Regional Water Board by calling (951) 320-2008.

F. Register of Interested Persons

Any person interested in being placed on the mailing list for information regarding the WDRs and NPDES permit should contact the Regional Water Board, reference this Facility, and provide a name, address, and phone number.

G. Additional Information

Requests for additional information or questions regarding this Order should be directed to Jane Qiu at (951) 320-2008.

ATTACHMENT G– MINIMUM LEVELS, IN PPB (μG/L)

The Minimum* Levels identified in this appendix represent the lowest concentration of a pollutant that can be quantitatively measured in a sample given the current state of performance in analytical chemistry methods in California. These Minimum* Levels were derived from data provided by state-certified analytical laboratories in 1997 and 1998 for pollutants regulated by the California Ocean Plan and shall be used until new values are adopted by the SWRCB. There are four major chemical groupings: volatile chemicals, semi-volatile chemicals, inorganics, pesticides & PCB's. "No Data" is indicated by "--".

TABLE II-1
MINIMUM* LEVELS – VOLATILE CHEMICALS

		Minimum* Level (ug/L)	
Volatile Chemicals	**CAS Number**	**GC Method [a]**	**GCMS Method [b]**
Acrolein	107028	2.	5
Acrylonitrile	107131	2.	2
Benzene	71432	0.5	2
Bromoform	75252	0.5	2
Carbon Tetrachloride	56235	0.5	2
Chlorobenzene	108907	0.5	2
Chlorodibromomethane	124481	0.5	2
Chloroform	67663	0.5	2
1,2-Dichlorobenzene (volatile)	95501	0.5	2
1,3-Dichlorobenzene (volatile)	541731	0.5	2
1,4-Dichlorobenzene (volatile)	106467	0.5	2
Dichlorobromomethane	75274	0.5	2
1,1-Dichloroethane	75343	0.5	1
1,2-Dichloroethane	107062	0.5	2
1,1-Dichloroethylene	75354	0.5	2
Dichloromethane	75092	0.5	2
1,3-Dichloropropene (volatile)	542756	0.5	2
Ethyl benzene	100414	0.5	2
Methyl Bromide	74839	1.	2
Methyl Chloride	74873	0.5	2
1,1,2,2-Tetrachloroethane	79345	0.5	2
Tetrachloroethylene	127184	0.5	2
Toluene	108883	0.5	2
1,1,1-Trichloroethane	71556	0.5	2
1,1,2-Trichloroethane	79005	0.5	2
Trichloroethylene	79016	0.5	2
Vinyl Chloride	75014	0.5	2

Table II-1 Notes

a) GC Method = Gas Chromatography
b) GCMS Method = Gas Chromatography / Mass Spectrometry
* To determine the lowest standard concentration in an instrument calibration curve for these techniques, use the given ML (see Chapter III, "Use of Minimum* Levels").

TABLE II-2
MINIMUM* LEVELS – SEMI VOLATILE CHEMICALS

		Minimum* Level (ug/L)			
Semi-Volatile Chemicals	**CAS Number**	**GC Method [a, *]**	**GCMS Method [b, *]**	**HPLC Method [c,*]**	**COLOR Method [d]**
Acenapthylene	208968	--	10	0.2	--
Anthracene	120127	--	10	2	--
Benzidine	92875	--	5	--	--
Benzo(a)anthracene	56553	--	10	2	--
Benzo(a)pyrene	50328	--	10	2	--
Benzo(b)fluoranthene	205992	--	10	10	--
Benzo(g,h,i)perylene	191242	--	5	0.1	--
Benzo(k)floranthene	207089	--	10	2	--
Bis 2-(1-Chloroethoxy) methane	111911	--	5	--	--
Bis(2-Chloroethyl)ether	111444	10	1	--	--
Bis(2-Chloroisopropyl)ether	39638329	10	2	--	--
Bis(2-Ethylhexyl) phthalate	117817	10	5	--	--
2-Chlorophenol	95578	2	5	--	--
Chrysene	218019	--	10	5	--
Di-n-butyl phthalate	84742	--	10	--	--
Dibenzo(a,h)anthracene	53703	--	10	0.1	--
1,2-Dichlorobenzene (semivolatile)	95504	2	2	--	--
1,3-Dichlorobenzene (semivolatile)	541731	2	1	--	--
1,4-Dichlorobenzene (semivolatile)	106467	2	1	--	--
3,3-Dichlorobenzidine	91941	--	5	--	--
2,4-Dichlorophenol	120832	1	5	--	--
1,3-Dichloropropene	542756	--	5	--	
Diethyl phthalate	84662	10	2	--	--
Dimethyl phthalate	131113	10	2	--	--
2,4-Dimethylphenol	105679	1	2	--	--
2,4-Dinitrophenol	51285	5	5	--	--
2,4-Dinitrotoluene	121142	10	5	--	--
1,2-Diphenylhydrazine	122667	--	1	--	--
Fluoranthene	206440	10	1	0.05	--
Fluorene	86737	--	10	0.1	--
Hexachlorobenzene	118741	5	1	--	--
Hexachlorobutadiene	87683	5	1	--	--
Hexachlorocyclopentadiene	77474	5	5	--	--

Semi-Volatile Chemicals	CAS Number	GC Method [a, *]	GCMS Method [b, *]	HPLC Method [c,*]	COLOR Method [d]
Hexachloroethane	67721	5	1	--	--
Indeno(1,2,3-cd)pyrene	193395	--	10	0.05	--
Isophorone	78591	10	1	--	--
2-methyl-4,6-dinitrophenol	534521	10	5	--	--
3-methyl-4-chlorophenol	59507	5	1	--	--
N-nitrosodi-n-propylamine	621647	10	5	--	--
N-nitrosodimethylamine	62759	10	5	--	--
N-nitrosodiphenylamine	86306	10	1	--	--
Nitrobenzene	98953	10	1	--	--
2-Nitrophenol	88755	--	10	--	--
4-Nitrophenol	100027	5	10	--	--
Pentachlorophenol	87865	1	5	--	--
Phenanthrene	85018	--	5	0.05	--
Phenol	108952	1	1	--	50
Pyrene	129000	--	10	0.05	--
2,4,6-Trichlorophenol	88062	10	10	--	--

Table II-2 Notes:

a) GC Method = Gas Chromatography
b) GCMS Method = Gas Chromatography / Mass Spectrometry
c) HPLC Method = High Pressure Liquid Chromatography
d) COLOR Method= Colorimetric

* To determine the lowest standard concentration in an instrument calibration curve for this technique, multiply the given ML by 1000 (see Chapter III, “Use of Minimum* Levels”).

Inorganic Substances	CAS Number	COLOR Method[a]	DCP Method[b]	FAA Method[c]	GFAA Method[d]	HYDRIDE Method[e]	ICP Method[f]	ICPMS Method[g]	SPGFAA Method[h]	CVAA Method[i]
Antimony	7440360	--	1000.	10.	5.	0.5	50.	0.5	5.	--
Arsenic	7440382	20.	1000.	--	2.	1.	10.	2.	2.	--
Beryllium	7440417	--	1000.	20.	0.5	--	2.	0.5	1.	--
Cadmium	7440439	--	1000.	10.	0.5	--	10.	0.2	0.5	--
Chromium (total)	--	--	1000.	50.	2.	--	10.	0.5	1.	--
Chromium (VI)	18540299	10.	--	5.	--	--	--	--	--	--
Copper	7440508	--	1000.	20.	5.	--	10.	0.5	2.	--
Cyanide	57125	5.	--	--	--	--	--	--	--	--
Lead	7439921	--	10000.	20.	5.	--	5.	0.5	2.	--
Mercury	7439976	--	--	--	--	--	--	0.5	--	0.2
Nickel	7440020	--	1000.	50.	5.	--	20.	1.	5.	--
Selenium	7782492	--	1000.	--	5.	1.	10.	2.	5.	--
Silver	7440224	--	1000.	10.	1.	--	10.	0.2	2.	--
Thallium	7440280	--	1000.	10.	2.	--	10.	1.	5.	--
Zinc	7440666	--	1000.	20.	--	--	20.	1.	10.	--

Table II-3 Notes

a) COLOR Method = Colorimetric
b) DCP Method = Direct Current Plasma
c) FAA Method = Flame Atomic Absorption
d) GFAA Method = Graphite Furnace Atomic Absorption
e) HYDRIDE Method = Gaseous Hydride Atomic Absorption
f) ICP Method = Inductively Coupled Plasma
g) ICPMS Method = Inductively Coupled Plasma / Mass Spectrometry
h) SPGFAA Method = Stabilized Platform Graphite Furnace Atomic Absorption (i.e., US EPA 200.9)
i) CVAA Method = Cold Vapor Atomic Absorption

* To determine the lowest standard concentration in an instrument calibration curve for these techniques, use the given ML (see Chapter III, "Use of Minimum* Levels").

TABLE II-4
MINIMUM* LEVELS – PESTICIDES AND PCBs

Pesticides – PCB's	CAS Number	Minimum* Level (ug/L) GC Method[a,*]
Aldrin	309002	0.005
Chlordane	57749	0.1
4,4'-DDD	72548	0.05
4,4'-DDE	72559	0.05
4,4'-DDT	50293	0.01
Dieldrin	60571	0.01
a-Endosulfan	959988	0.02
b-Endosulfan	33213659	0.01
Endosulfan Sulfate	1031078	0.05
Endrin	72208	0.01
Heptachlor	76448	0.01
Heptachlor Epoxide	1024573	0.01
a-Hexachlorocyclohexane	319846	0.01
b-Hexachlorocyclohexane	319857	0.005
d-Hexachlorocyclohexane	319868	0.005
g-Hexachlorocyclohexane (Lindane)	58899	0.02
PCB 1016	--	0.5
PCB 1221	--	0.5
PCB 1232	--	0.5
PCB 1242	--	0.5
PCB 1248	--	0.5
PCB 1254	--	0.5
PCB 1260	--	0.5
Toxaphene	8001352	0.5

Table II-4 Notes

a) GC Method = Gas Chromatography

* To determine the lowest standard concentration in an instrument calibration curve for this technique, multiply the given ML by 100 (see Chapter III, "Use of Minimum* Levels").

ATTACHMENT J - STORM WATER POLLUTION PREVENTION PLAN REQUIREMENTS

1. *Implementation Schedule*

The storm water pollution prevention plan (SWPPP) shall be prepared and/or updated and implemented in a timely manner, but in no case later than 90 days before start of operation.

2. *Objectives*

The SWPPP has two major objectives: (a) to identify and evaluate sources of pollutants associated with industrial activities that may affect the quality of storm water discharges and authorized non-storm water discharges from the facility; and (b) to identify and implement site-specific best management practices (BMPs) to reduce or prevent pollutants associated with industrial activities in storm water discharges and authorized non-storm water discharges. BMPs may include a variety of pollution prevention measures or other low-cost pollution control measures. They are generally categorized as non-structural BMPs (activity schedules, prohibitions of practices, maintenance procedures, and other low-cost measures) and as structural BMPs (treatment measures, run-off controls, over-head coverage). To achieve these objectives, dischargers should consider the five phase process for SWPPP development and implementation as shown in Table A, below.

The SWPPP requirements are designed to be sufficiently flexible to meet the various needs of the facility. SWPPP requirements that are not applicable to the facility should not be included in the SWPPP.

A facility's SWPPP is a written document that shall contain a compliance activity schedule, a description of industrial activities and pollutant sources, descriptions of BMPs, drawings, maps, and relevant copies or references of parts of other plans. The SWPPP shall be revised whenever appropriate and shall be readily available for review by facility employees or Regional Water Board inspectors.

3. *Planning and Organization*

a. Pollution Prevention Team

The SWPPP shall identify a specific individual or individuals and their positions within the facility organization as members of a storm water pollution prevention team responsible for developing the SWPPP, assisting the facility manager in SWPPP implementation and revision, and conducting all monitoring program activities required in the Stormwater monitoring program of Order No. R8-2011-0046. The SWPPP shall clearly identify the storm water pollution prevention related responsibilities, duties, and activities of each team member.

b. Review Other Requirements and Existing Facility Plans

The SWPPP may incorporate or reference the appropriate elements of other regulatory requirements. The discharger shall review all local, state, and federal requirements that impact, complement, or are consistent with the requirements of Order No. R8-2011-0046. The discharger shall identify any existing facility plans that contain storm water pollutant control measures or relate to the requirements of Order No. R8-2011-0046. As examples, dischargers whose facilities are subject to Federal Spill Prevention Control and Countermeasures' requirements should already have instituted a plan to control spills of certain hazardous materials. Similarly, the discharger whose facilities are subject to air quality related permits and regulations may already have evaluated industrial activities that generate dust or particulates.

4. *Site Map*

The SWPPP shall include a site map. The site map shall be provided on an 8-1/2 x 11 inch or larger sheet and include notes, legends, and other data as appropriate to ensure that the site map is clear and understandable. If necessary, the discharger may provide the required information on multiple site maps. The following information shall be included on the site map:

a. The facility boundaries; the outline of all storm water drainage areas within the facility boundaries; portions of the drainage area impacted by run-on from surrounding areas; and direction of flow of each drainage area, on-site surface water bodies, and areas of soil erosion. The map shall also identify nearby water bodies (such as rivers, lakes, ponds) and municipal storm drain inlets where the facility's storm water discharges and authorized non-storm water discharges may be received.

b. The location of the storm water collection and conveyance system, associated points of discharge, and direction of flow. Include any structural control measures that affect storm water discharges, authorized non-storm water discharges, and run-on. Examples of structural control measures are catch basins, berms, detention ponds, secondary containment, oil/water separators, diversion barriers, etc.

c. An outline of all impervious areas of the facility, including paved areas, buildings, covered storage areas, or other roofed structures.

d. Locations where materials are directly exposed to precipitation and the locations where significant spills or leaks identified in Section 6.a.(4)., below, have occurred.

e. Areas of industrial activity. This shall include the locations of all storage areas and storage tanks, shipping and receiving areas, fueling areas, vehicle and equipment storage/maintenance areas, material handling and processing areas, waste treatment and disposal areas, dust or particulate generating areas, cleaning and rinsing areas, and other areas of industrial activity which are potential pollutant sources.

5. *List of Significant Materials*

The SWPPP shall include a list of significant materials handled and stored at the site. For each material on the list, describe the locations where the material is being stored, received, shipped, and handled, as well as the typical quantities and frequency. Materials shall include raw materials, intermediate products, final or finished products, recycled materials, and waste or disposed materials.

6. *Description of Potential Pollutant Sources*

a. The SWPPP shall include a narrative description of the facility's industrial activities, as identified in Section 4.e., above, associated potential pollutant sources, and potential pollutants that could be discharged in storm water discharges or authorized non-storm water discharges. At a minimum, the following items related to a facility's industrial activities shall be considered:

(1) Industrial Processes

Describe each industrial process, the type, characteristics, and quantity of significant materials used in or resulting from the process, and a description of the processes (manufacturing or treatment), cleaning, rinsing, recycling, disposal, or other activities related to the process. Where applicable, areas protected by containment structures and the corresponding containment capacity shall be described.

(2) Material Handling and Storage Areas

Describe each handling and storage area, type, characteristics, and quantity of significant materials handled or stored, description of the shipping, receiving, and loading procedures, and the spill or leak prevention and response procedures. Where applicable, areas protected by containment structures and the corresponding containment capacity shall be described.

(3) Dust and Particulate Generating Activities

Describe all industrial activities that generate dust or particulates that may be deposited within the facility's boundaries and identify their discharge locations; the characteristics of dust and particulate pollutants; the approximate quantity of dust and particulate pollutants that may be deposited within the facility boundaries; and a description of the primary areas of the facility where dust and particulate pollutants would settle.

(4) Significant Spills and Leaks

Describe materials that have spilled or leaked in significant quantities in storm water discharges or non-storm water discharges. Include toxic chemicals (listed in 40 Code of Federal Regulations [CFR] Part 302) that have been discharged to storm water as reported on U.S. Environmental Protection Agency (U.S. EPA) Form R, and oil and

hazardous substances in excess of reportable quantities (see 40 CFR, Parts 110, 117, and 302).

The description shall include the type, characteristics, and approximate quantity of the material spilled or leaked, the cleanup or remedial actions that have occurred or are planned, the approximate remaining quantity of materials that may be exposed to storm water or non-storm water discharges, and the preventative measures taken to ensure spills or leaks do not reoccur. Such list shall be updated as appropriate during the term of Order No. R8-2012-0007.

(5) Non-Storm Water Discharges

The discharger shall investigate the facility to identify all non-storm water discharges and their sources. As part of this investigation, all drains (inlets and outlets) shall be evaluated to identify whether they connect to the storm drain system.

All non-storm water discharges shall be described. This shall include the source, quantity, frequency, and characteristics of the non-storm water discharges and associated drainage area.

Non-storm water discharges that contain significant quantities of pollutants or that do not meet the conditions of Order No. R8-2012-0007 are prohibited. (Examples of prohibited non-storm water discharges are contact and non-contact cooling water, boiler blowdown, rinse water, wash water, etc.). The SWPPP must include BMPs to prevent or reduce contact of non-storm water discharges with significant materials or equipment.

(6) Soil Erosion

Describe the facility locations where soil erosion may occur as a result of industrial activity, storm water discharges associated with industrial activity, or authorized non-storm water discharges.

b. The SWPPP shall include a summary of all areas of industrial activities, potential pollutant sources, and potential pollutants. This information should be summarized similar to Table B, below. The last column of Table B, "Control Practices", should be completed in accordance with Section 8., below.

7. *Assessment of Potential Pollutant Sources*

a. The SWPPP shall include a narrative assessment of all industrial activities and potential pollutant sources as described in Section 6., above, to determine:

(1) Which areas of the facility are likely sources of pollutants in storm water discharges and authorized non-storm water discharges, and

(2) Which pollutants are likely to be present in storm water discharges and authorized non-storm water discharges. The discharger shall consider and evaluate various factors when performing this assessment such as current storm water BMPs;

quantities of significant materials handled, produced, stored, or disposed of; likelihood of exposure to storm water or authorized non-storm water discharges; history of spill or leaks; and run-on from outside sources.

b. The discharger shall summarize the areas of the facility that are likely sources of pollutants and the corresponding pollutants that are likely to be present in storm water discharges and authorized non-storm water discharges.

The discharger is required to develop and implement additional BMPs as appropriate and necessary to prevent or reduce pollutants associated with each pollutant source. The BMPs will be narratively described in Section 8., below.

8. *Storm Water Best Management Practices*

The SWPPP shall include a narrative description of the storm water BMPs to be implemented at the facility for each potential pollutant and its source identified in the site assessment phase (Sections 6. and 7., above). The BMPs shall be developed and implemented to reduce or prevent pollutants in storm water discharges and authorized non-storm water discharges. Each pollutant and its source may require one or more BMPs. Some BMPs may be implemented for multiple pollutants and their sources, while other BMPs will be implemented for a very specific pollutant and its source.

The description of the BMPs shall identify the BMPs as (1) existing BMPs, (2) existing BMPs to be revised and implemented, or (3) new BMPs to be implemented. The description shall also include a discussion on the effectiveness of each BMP to reduce or prevent pollutants in storm water discharges and authorized non-storm water discharges. The SWPPP shall provide a summary of all BMPs implemented for each pollutant source. This information should be summarized similar to Table B.

The discharger shall consider the following BMPs for implementation at the facility:

a. Non-Structural BMPs: Non-structural BMPs generally consist of processes, prohibitions, procedures, schedule of activities, etc., that prevent pollutants associated with industrial activity from contacting with storm water discharges and authorized non-storm water discharges. They are considered low technology, cost-effective measures. The discharger should consider all possible non-structural BMPs options before considering additional structural BMPs (see Section 8.b., below). Below is a list of non-structural BMPs that should be considered:

(1) Good Housekeeping: Good housekeeping generally consist of practical procedures to maintain a clean and orderly facility.

(2) Preventive Maintenance: Preventive maintenance includes the regular inspection and maintenance of structural storm water controls (catch basins, oil/water separators, etc.) as well as other facility equipment and systems.

(3) Spill Response: This includes spill clean-up procedures and necessary clean-up equipment based upon the quantities and locations of significant materials that may spill or leak.

(4) Material Handling and Storage: This includes all procedures to minimize the potential for spills and leaks and to minimize exposure of significant materials to storm water and authorized non-storm water discharges.

(5) Employee Training: This includes training of personnel who are responsible for (a) implementing activities identified in the SWPPP, (b) conducting inspections, sampling, and visual observations, and (c) managing storm water. Training should address topics such as spill response, good housekeeping, and material handling procedures, and actions necessary to implement all BMPs identified in the SWPPP. The SWPPP shall identify periodic dates for such training. Records shall be maintained of all training sessions held.

(6) Waste Handling/Recycling: This includes the procedures or processes to handle, store, or dispose of waste materials or recyclable materials.

(7) Record Keeping and Internal Reporting: This includes the procedures to ensure that all records of inspections, spills, maintenance activities, corrective actions, visual observations, etc., are developed, retained, and provided, as necessary, to the appropriate facility personnel.

(8) Erosion Control and Site Stabilization: This includes a description of all sediment and erosion control activities. This may include the planting and maintenance of vegetation, diversion of run-on and runoff, placement of sandbags, silt screens, or other sediment control devices, etc.

(9) Inspections: This includes, in addition to the preventative maintenance inspections identified above, an inspection schedule of all potential pollutant sources. Tracking and follow-up procedures shall be described to ensure adequate corrective actions are taken and SWPPPs are made.

(10) Quality Assurance: This includes the procedures to ensure that all elements of the SWPPP and Monitoring Program are adequately conducted.

b. Structural BMPs: Where non-structural BMPs as identified in Section 8.a., above, are not effective, structural BMPs shall be considered. Structural BMPs generally consist of structural devices that reduce or prevent pollutants in storm water discharges and authorized non-storm water discharges. Below is a list of structural BMPs that should be considered:

(1) Overhead Coverage: This includes structures that provide horizontal coverage of materials, chemicals, and pollutant sources from contact with storm water and authorized non-storm water discharges.

(2) Retention Ponds: This includes basins, ponds, surface impoundments, bermed areas, etc., that do not allow storm water to discharge from the facility.

(3) Control Devices: This includes berms or other devices that channel or route run-on and runoff away from pollutant sources.

(4) Secondary Containment Structures: This generally includes containment structures around storage tanks and other areas for the purpose of collecting any leaks or spills.

(5) Treatment: This includes inlet controls, infiltration devices, oil/water separators, detention ponds, vegetative swales, etc., that reduce the pollutants in storm water discharges and authorized non-storm water discharges.

9. *Annual Comprehensive Site Compliance Evaluation*

The discharger shall conduct one comprehensive site compliance evaluation in each reporting period (July 1-June 30). Evaluations shall be conducted within 8-16 months of each other. The SWPPP shall be revised, as appropriate, and the revisions implemented within 90 days of the evaluation. Evaluations shall include the following:

a. A review of all visual observation records, inspection records, and sampling and analysis results.

b. A visual inspection of all potential pollutant sources for evidence of, or the potential for, pollutants entering the drainage system.

c. A review and evaluation of all BMPs (both structural and non-structural) to determine whether the BMPs are adequate, properly implemented and maintained, or whether additional BMPs are needed. A visual inspection of equipment needed to implement the SWPPP, such as spill response equipment, shall be included.

d. An evaluation report that includes, (1) identification of personnel performing the evaluation, (2) the date(s) of the evaluation, (3) necessary SWPPP revisions, (4) schedule, as required in Section 10.e, below, for implementing SWPPP revisions, (5) any incidents of non-compliance and the corrective actions taken, and (6) a certification that the discharger is in compliance with Order No. R8-2011-0046. If the above certification cannot be provided, explain in the evaluation report why the discharger is not in compliance with this order. The evaluation report shall be submitted as part of the annual report, retained for at least five years, and signed and certified.

10. *SWPPP General Requirements*

a. The SWPPP shall be retained on site and made available upon request by a representative of the Regional Water Board and/or local storm water management agency (local agency) which receives the storm water discharges.

b. The Regional Water Board and/or local agency may notify the discharger when the SWPPP does not meet one or more of the minimum requirements of this section. As requested by the Regional Water Board and/or local agency, the discharger shall submit a SWPPP revision and implementation schedule that meets the minimum requirements of this section to the Regional Water Board and/or local agency that requested the SWPPP revisions. Within 14 days after implementing the required

SWPPP revisions, the discharger shall provide written certification to the Regional Water Board and/or local agency that the revisions have been implemented.

c. The SWPPP shall be revised, as appropriate, and implemented prior to changes in industrial activities which (1) may significantly increase the quantities of pollutants in storm water discharge, (2) cause a new area of industrial activity at the facility to be exposed to storm water, or (3) begin an industrial activity which would introduce a new pollutant source at the facility.

d. The SWPPP shall be revised and implemented in a timely manner, but in no case more than 90 days after a discharger determines that the SWPPP is in violation of any requirement(s) of Order No. R8-2011-0046.

e. When any part of the SWPPP is infeasible to implement by the deadlines specified in Order No. R8-2011-0046, due to proposed significant structural changes, the discharger shall submit a report to the Regional Water Board prior to the applicable deadline that (1) describes the portion of the SWPPP that is infeasible to implement by the deadline, (2) provides justification for a time extension, (3) provides a schedule for completing and implementing that portion of the SWPPP, and (4) describes the BMPs that will be implemented in the interim period to reduce or prevent pollutants in storm water discharges and authorized non-storm water discharges. Such reports are subject to Regional Water Board approval and/or modifications. The discharger shall provide written notification to the Regional Water Board within 14 days after the SWPPP revisions are implemented.

f. The SWPPP shall be provided, upon request, to the Regional Water Board. The SWPPP is considered a report that shall be available to the public by the Regional Water Board under Section 308(b) of the Clean Water Act.

TABLE A

FIVE PHASES FOR DEVELOPING AND IMPLEMENTING INDUSTRIAL STORM WATER POLLUTION PREVENTION PLANS

PLANNING AND ORGANIZATION

*Form pollution prevention team
*Review other plans

↓

ASSESSMENT PHASE

*Develop a site map
*Identify potential pollutant sources
*Inventory of materials and chemicals
*List significant spills and leaks
*Identify non-storm water discharges
*Assess pollutant risks

↓

BEST MANAGEMENT PRACTICES IDENTIFICATION PHASE

*Non-structural BMPs
*Structural BMPs
*Select activity and site-specific BMPs

↓

IMPLEMENTATION PHASE

*Train employees
*Implement BMPs
*Conduct record keeping and reporting

↓

EVALUATION / MONITORING

*Conduct annual site evaluation
*Review monitoring information
*Evaluate BMPs
*Review and revise SWPPP

TABLE B

EXAMPLE

ASSESSMENT OF POTENTIAL POLLUTION SOURCES AND CORRESPONDING BEST MANAGEMENT PRACTICES SUMMARY

AREA	ACTIVITY	POLLUTANT SOURCE	POLLUTANT	**BEST MANAGEMENT PRACTICES**
Vehicle & equipment fueling	Fueling	Spills and leaks during delivery	Fuel oil	- Use spill and overflow protection - Minimize run-on of storm water into the fueling area - Cover fueling area - Use dry cleanup methods rather than hosing down area - Implement proper spill prevention control program - Implement adequate preventative maintenance program to prevent tank and line leaks - Inspect fueling areas regularly to detect problems before they occur - Train employees on proper fueling, cleanup, and spill response techniques.
		Spills caused by topping off fuel oil	Fuel oil	
		Hosing or washing down fuel area	Fuel oil	
		Leaking storage tanks	Fuel oil	
		Rainfall running off fueling areas, and rainfall running onto and off fueling area	Fuel oil	

ATTACHMENT K - STORMWATER MONITORING PROGRAM AND REPORTING REQUIREMENTS

1. *Implementation Schedule*

The discharger shall continue to implement their existing Stormwater monitoring program and implement any necessary revisions to their Stormwater monitoring program in a timely manner, but in no case later than 90 days before start up of operation. The discharger may use the monitoring results conducted in accordance with their existing Stormwater monitoring program to satisfy the pollutant/parameter reduction requirements in Section 5.c., below, and Sampling and Analysis Exemptions and Reduction Certifications in Section 10, below.

2. *Objectives*

The objectives of the monitoring program are to:

a. Ensure that storm water discharges are in compliance with waste discharge requirements specified in Order No. R8-2011-0046.

b. Ensure practices at the facility to reduce or prevent pollutants in storm water discharges and authorized non-storm water discharges are evaluated and revised to meet changing conditions.

c. Aid in the implementation and revision of the SWPPP required by Attachment "J" Stormwater Pollution Prevention Plan of Order No. R8-2011-0046.

d. Measure the effectiveness of best management practices (BMPs) to prevent or reduce pollutants in storm water discharges and authorized non-storm water discharges. Much of the information necessary to develop the monitoring program, such as discharge locations, drainage areas, pollutant sources, etc., should be found in the Storm Water Pollution Prevention Plan (SWPPP). The facility's monitoring program shall be a written, site-specific document that shall be revised whenever appropriate and be readily available for review by employees or Regional Water Board inspectors.

3. *Non-Storm Water Discharge Visual Observations*

a. The discharger shall visually observe all drainage areas within their facility for the presence of unauthorized non-storm water discharges;

b. The discharger shall visually observe the facility's authorized non-storm water discharges and their sources;

c. The visual observations required above shall occur quarterly, during daylight hours, on days with no storm water discharges, and during scheduled facility operating hours[1]. Quarterly visual observations shall be conducted in each of the following periods: January-March, April-June, July-September, and October-December. The discharger shall conduct quarterly visual observations within 6-18 weeks of each other.

d. Visual observations shall document the presence of any discolorations, stains, odors, floating materials, etc., as well as the source of any discharge. Records shall be maintained of the visual observation dates, locations observed, observations, and response taken to eliminate unauthorized non-storm water discharges and to reduce or prevent pollutants from contacting non-storm water discharges. The SWPPP shall be revised, as necessary, and implemented in accordance with Attachment "J" Stormwater Pollution Prevention Plan of Order No. R8-2011-0046.

4. *Storm Water Discharge Visual Observations*

a. With the exception of those facilities described in Section 4.d., below, the discharger shall visually observe storm water discharges from one storm event per month during the wet season (October 1-May 30). These visual observations shall occur during the first hour of discharge and at all discharge locations. Visual observations of stored or contained storm water shall occur at the time of release.

b. Visual observations are only required of storm water discharges that occur during daylight hours that are preceded by at least three (3) working days[2] without storm water discharges and that occur during scheduled facility operating hours.

c. Visual observations shall document the presence of any floating and suspended material, oil and grease, discolorations, turbidity, odor, and source of any pollutants. Records shall be maintained of observation dates, locations observed, observations, and response taken to reduce or prevent pollutants in storm water discharges. The SWPPP shall be revised, as necessary, and implemented in accordance with Attachment "J" Stormwater Pollution Prevention Plan of Order No. R8-2011-0046.

d. The discharger with storm water containment facilities shall conduct monthly inspections of their containment areas to detect leaks and ensure maintenance of adequate freeboard. Records shall be maintained of the inspection dates, observations, and any response taken to eliminate leaks and to maintain adequate freeboard.

---

1 "Scheduled facility operating hours" are the time periods when the facility is staffed to conduct any function related to industrial activity, but excluding time periods where only routine maintenance, emergency response, security, and/or janitorial services are performed.

2 Three (3) working days may be separated by non-working days such as weekends and holidays provided that no storm water discharges occur during the three (3) working days and the non-working days.

5. *Sampling and Analysis*

a. The discharger shall collect storm water samples during the first hour of discharge from (1) the first storm event of the wet season, and (2) at least one other storm event in the wet season. All storm water discharge locations shall be sampled. Sampling of stored or contained storm water shall occur at the time the stored or contained storm water is released. The discharger that does not collect samples from the first storm event of the wet season are still required to collect samples from two other storm events of the wet season and shall explain in the "Annual Stormwater Report" (see Section 12, below) why the first storm event was not sampled.

b. Sample collection is only required of storm water discharges that occur during scheduled facility operating hours and that are preceded by at least (3) three working days without storm water discharge.

c. The samples shall be analyzed for:

(1) Total suspended solids (TSS) pH, specific conductance, and total organic carbon (TOC). Oil and grease (O&G) may be substituted for TOC;

(2) Toxic chemicals and other pollutants that are likely to be present in storm water discharges in significant quantities. If these pollutants are not detected in significant quantities after two consecutive sampling events, the discharger may eliminate the pollutant from future sample analysis until the pollutant is likely to be present again;

(3) The discharger is not required to analyze a parameter when either of the two following conditions are met: (a) the parameter has not been detected in significant quantities from the last two consecutive sampling events, or (b) the parameter is not likely to be present in storm water discharges and authorized non-storm water discharges in significant quantities based upon the discharger's evaluation of the facilities industrial activities, potential pollutant sources, and SWPPP; and

(4) Other parameters as required by the Regional Water Board.

6. *Sample Storm Water Discharge Locations*

a. The discharger shall visually observe and collect samples of storm water discharges from all drainage areas that represent the quality and quantity of the facility's storm water discharges from the storm event.

b. If the facility's storm water discharges are commingled with run-on from surrounding areas, the discharger should identify other visual observation and sample collection locations that have not been commingled by run-on and that

represent the quality and quantity of the facility's storm water discharges from the storm event.

c. If visual observation and sample collection locations are difficult to observe or sample (e.g., sheet flow, submerged outfalls), the discharger shall identify and collect samples from other locations that represent the quality and quantity of the facility's storm water discharges from the storm event.

d. The discharger that determines that the industrial activities and BMPs within two or more drainage areas are substantially identical may either (1) collect samples from a reduced number of substantially identical drainage areas, or (2) collect samples from each substantially identical drainage area and analyze a combined sample from each substantially identical drainage area. The discharger must document such a determination in the annual Stormwater report.

7. Visual Observation and Sample Collection Exceptions

The discharger is required to be prepared to collect samples and conduct visual observations at the beginning of the wet season (October 1) and throughout the wet season until the minimum requirements of Sections 4. and 5., above, are completed with the following exceptions:

a. The discharger is not required to collect a sample and conduct visual observations in accordance with Section 4 and Section 5, above, due to dangerous weather conditions, such as flooding, electrical storm, etc., when storm water discharges begin after scheduled facility operating hours or when storm water discharges are not preceded by three working days without discharge. Visual observations are only required during daylight hours. The discharger that does not collect the required samples or visual observations during a wet season due to these exceptions shall include an explanation in the "Annual Stormwater Report" why the sampling or visual observations could not be conducted.

b. The discharger may conduct visual observations and sample collection more than one hour after discharge begins if the discharger determines that the objectives of this section will be better satisfied. The discharger shall include an explanation in the "Annual Stormwater Report" why the visual observations and sample collection should be conducted after the first hour of discharge.

8. *Alternative Monitoring Procedures*

The discharger may propose an alternative monitoring program that meets Section 2, above, monitoring program objectives for approval by the Regional Water Board's Executive Officer. The discharger shall continue to comply with the monitoring requirements of this section and may not implement an alternative monitoring plan until the alternative monitoring plan is approved by the Regional Water Board's Executive Officer. Alternative monitoring plans are subject to modification by the Regional Water Board's Executive Officer.

9. *Monitoring Methods*

a. The discharger shall explain how the facility's monitoring program will satisfy the monitoring program objectives of Section 2., above. This shall include:

(1) Rationale and description of the visual observation methods, location, and frequency;

(2) Rationale and description of the sampling methods, location, and frequency; and

(3) Identification of the analytical methods and corresponding method detection limits used to detect pollutants in storm water discharges. This shall include justification that the method detection limits are adequate to satisfy the objectives of the monitoring program.

b. All sampling and sample preservation shall be in accordance with the current edition of "Standard Methods for the Examination of Water and Wastewater" (American Public Health Association). All monitoring instruments and equipment (including the discharger's own field instruments for measuring pH and Electro-conductivity) shall be calibrated and maintained in accordance with manufacturers' specifications to ensure accurate measurements. All laboratory analyses must be conducted according to test procedures under 40 CFR Part 136, unless other test procedures have been specified in Order No. R8-2011-0046 or by the Regional Water Board's Executive Officer. All metals shall be reported as total recoverable metals or unless otherwise specified in Order No. R8-2011-0046. With the exception of analysis conducted by the discharger, all laboratory analyses shall be conducted at a laboratory certified for such analyses by the State Department of Health Services. The discharger may conduct their own sample analyses if the discharger has sufficient capability (qualified employees, laboratory equipment, etc.) to adequately perform the test procedures.

10. *Sampling and Analysis Exemptions and Reductions*

A discharger who qualifies for sampling and analysis exemptions, as described below in Section 10.a.(1) or who qualifies for reduced sampling and analysis, as described below in Section 10.b., must submit the appropriate certifications and required documentation to the Regional Water Board prior to the wet season (October 1) and certify as part of the annual Stormwater report submittal. A discharger that qualifies for either the Regional Water Board or local agency certification programs, as described below in Section 10.a.(2) and (3), shall submit certification and documentation in accordance with the requirements of those programs. The discharger who provides certification(s) in accordance with this section are still required to comply with all other monitoring program and reporting requirements. The discharger shall prepare and submit their certification(s) using forms and instructions provided by the State Water Board, Regional Water Board, or local agency or shall submit their information on a form that contains equivalent information. The discharger whose facility no longer meets the certification conditions must notify the Regional Water Board's Executive Officer (and local agency) within 30 days and

immediately comply with Section 5., Sampling and Analysis requirements. Should a Regional Water Board (or local agency) determine that a certification does not meet the conditions set forth below, the discharger must immediately comply with the Section 5., Sampling and Analysis requirements.

a. Sampling and Analysis Exemptions

A discharger is not required to collect and analyze samples in accordance with Section 5., above, if the discharger meets all of the conditions of one of the following certification programs:

(1) No Exposure Certification (NEC)

This exemption is designed primarily for those facilities where all industrial activities are conducted inside buildings and where all materials stored and handled are not exposed to storm water. To qualify for this exemption, the discharger must certify that their facilities meet all of the following conditions:

(a) All prohibited non-storm water discharges have been eliminated or otherwise permitted.

(b) All authorized non-storm water discharges have been identified and addressed in the SWPPP.

(c) All areas of past exposure have been inspected and cleaned, as appropriate.

(d) All significant materials related to industrial activity (including waste materials) are not exposed to storm water or authorized non-storm water discharges.

(e) All industrial activities and industrial equipment are not exposed to storm water or authorized non-storm water discharges.

(f) There is no exposure of storm water to significant materials associated with industrial activity through other direct or indirect pathways such as from industrial activities that generate dust and particulates.

(g) There is periodic re-evaluation of the facility to ensure conditions (a), (b), (d), (e), and (f) above are continuously met. At a minimum, re-evaluation shall be conducted once a year.

(2) Regional Water Board Certification Programs

The Regional Water Board may grant an exemption to the Section 5. Sampling and Analysis requirements if it determines a discharger has met the conditions set forth in a Regional Water Board certification program. Regional Water Board certification programs may include conditions to (a) exempt the discharger whose facilities infrequently discharge storm water to waters of the United States, and (b) exempt the discharger that demonstrate compliance with the terms and conditions of Order No. R8-2011-0046.

(3) Local Agency Certifications

A local agency may develop a local agency certification program. Such programs must be approved by the Regional Water Board. An approved local agency program may either grant an exemption from Section 5. Sampling and Analysis requirements or reduce the frequency of sampling if it determines that a discharger has demonstrated compliance with the terms and conditions of the Industrial Activities Storm Water General Permit Order No. 97-03-DWQ which was adopted by the State Water Resources Control Board on April 17, 1997.

b. Sampling and Analysis Reduction

(1) A discharger may reduce the number of sampling events required to be sampled for the remaining term of Order No. R8-2011-0046 if the discharger provides certification that the following conditions have been met:

(a) The discharger has collected and analyzed samples from a minimum of six storm events from all required drainage areas;

(b) All prohibited non-storm water discharges have been eliminated or otherwise permitted;

(c) The discharger demonstrates compliance with the terms and conditions of the Order No. R8-2011-0046 for the previous two years (i.e., completed Annual Stormwater Reports, performed visual observations, implemented appropriate BMPs, etc.);

(d) The discharger demonstrates that the facility's storm water discharges and authorized non-storm water discharges do not contain significant quantities of pollutants; and

(e) Conditions (b), (c), and (d) above are expected to remain in effect for a minimum of one year after filing the certification.

11. <u>Records</u>

Records of all storm water monitoring information and copies of all reports (including the Annual Stormwater Reports) required by Order No. R8-2011-0046 shall be retained for a period of at least five years. These records shall include:

a. The date, place, and time of site inspections, sampling, visual observations, and/or measurements;

b. The individual(s) who performed the site inspections, sampling, visual observations, and or measurements;

c. Flow measurements or estimates;

d. The date and approximate time of analyses;

e. The individual(s) who performed the analyses;

f. Analytical results, method detection limits, and the analytical techniques or methods used;

g. Quality assurance/quality control records and results;

h. Non-storm water discharge inspections and visual observations and storm water discharge visual observation records (see Sections 3. and 4., above);

i. Visual observation and sample collection exception records (see Section 5.a, 6.d, 7, and 10.b.(2), above;

j. All calibration and maintenance records of on-site instruments used;

k. All Sampling and Analysis Exemption and Reduction certifications and supporting documentation (see Section 10);

l. The records of any corrective actions and follow-up activities that resulted from the visual observations.

12. Annual Report

The discharger shall submit an Annual Stormwater Report by July 1 of each year to the Executive Officer of the Regional Water Board and to the local agency (if requested). The report shall include a summary of visual observations and sampling results, an evaluation of the visual observation and sampling and analysis results, laboratory reports, the Annual Comprehensive Site Compliance Evaluation Report required in Section 9. of Attachment "J" of Order No. R8-2011-0046, an explanation of why a facility did not implement any activities required by Order No. R8-2011-0046 (if not already included in the Evaluation Report), and records specified in Section 11., above. The method detection limit of each analytical parameter shall be included. Analytical results that are less than the method detection limit shall be reported as "less than the method detection limit". The discharger shall prepare and submit their Annual Stormwater Reports using the annual report forms provided by the State Water Board or Regional Water Board or shall submit their information on a form that contains equivalent information.

13. Watershed Monitoring Option

Regional Water Boards may approve proposals to substitute watershed monitoring for some or all of the requirements of this section if the Regional Water Board finds that the watershed monitoring will provide substantially similar monitoring information in evaluating discharger compliance with the requirements of Order No. R8-2011-0046.

Item 8

Poseidon Resources (Surfside) LLC

Responses to Comments
Received on or Before 12-9-11

CALIFORNIA REGIONAL WATER QUALITY CONTROL BOARD
SANTA ANA REGION
TENTATIVE ORDER NO. R8-2012-00007 (formally R8-2011-0046)

REISSUANCE OF WASTE DISCHARGE REQUIREMENTS
FOR THE POSEIDON RESOURCES (SURFSIDE) LLC'S HUNTINGTON BEACH DESALINATION FACILITY,

RESPONSES TO COMMENTS RECEIVED ON OR BEFORE DECEMBER 9, 2011

No.	Comment	Responses
WRITTEN COMMENTS		
November 21, 2011 letter from Orange County Coastkeeper and Surfrider Foundation		
1.	Coastkeeper and Surfrider assert Poseidon Resources' (Poseidon) renewal of Order No. R8-2006-0034, NPDES No. CA80000403, which remains in effect until the approval by the Regional Water Quality Control Board, Santa Ana Region (Regional Board) of Order No. R8-2011-0046, NPDES No. CA80000402, is in part premature and should include conditions on the operation of the Huntington Beach Desalination Facility (Facility) until the state adopts a uniform policy on the development of ocean desalination facilities. Our organizations are concerned that Poseidon is moving forward with an application for a NPDES permit for an ocean desalination project in the midst of efforts by the California Ocean Protection Council and the State Board to develop policies and regulations guiding the development of these facilities and the approval of this Tentative Order would result in the development of an non-compliant facility that would require expensive retrofits to comply with the results of the OPC and State Board's process.	While we are aware of State Board efforts to develop a policy that addresses the development and operation of desalination facilities, the renewal of Order No. R9-2006-0034 is not premature. Order No. R8-2006-0034 expired on August 1, 2011, and the Discharger submitted a timely application for renewal of this permit on February 2, 2010. It can take several years for State Board policies to ultimately be promulgated and approved by OAL (and EPA if necessary)—and it is not appropriate, as a legal or policy matter, to wait for the outcome of the policy development process before proceeding on timely submitted applications for NPDES permits. As the State Board policy is currently being developed, we are unaware of any regulatory or policy proposal with which the terms of the Order are in conflict (and Commenter has provided none). Furthermore, as provided in Section C(1)(a) of the Order, the Order may be reopened to address any changes to applicable state or federal policies ("Reopener provisions").
2.	Poseidon's application for renewal of its existing NPDES permit allowing for the continued use of the Huntington Beach Generating Station's (HBGS) existing intake infrastructure would be in direct conflict with the intent of the once through cooling policy (OTC Policy), adopted less than two years ago, as well as violate some of the expressed provisions in that Policy.	First the OTC policy does not apply to ocean desalination facilities or applications for NPDES permits regulating such NPDES permits. Likewise, the consistency with the intent of the OTC policy is not required and, as explained below, misunderstood and misapplied. Second, Commenter misstates the intent of the OTC policy and improperly extrapolates how the intent behind the OTC policy would bear on the proposed permit. Commenter argues that the purpose of the policy was to phase out the use of intake structures so as to minimize entrainment, impingement, and other deleterious adverse impacts on the marine ecosystems. Actually, the

No.	Comment	Responses
		intent of the OTC policy is as follows: "The intent of this Policy is to ensure that the beneficial uses of the State's coastal and estuarine waters are protected while also ensuring that the electrical power needs essential for the welfare of the citizens of the State are met." (State Board, Statewide Water Quality Control Policy on the Use of Coastal and Estuarine Waters For Power Plant Cooling (July 19, 2011), at 1.) This is important, because, when applying this balancing test to power generation, it is possible to significantly reduce, or entirely eliminate the use of OTC and still allow for the generation of electricity. However, when applying this balancing test to an ocean desalination facility, there does not appear to be a way for such a facility to function without the intake of ocean water. Put another way, the intake of ocean water is primary to the functioning of an ocean desalination facility, while it is secondary to the functioning of a power plant. Furthermore, unlike power plants, an ocean desalination facility can reduce the reliance on of other water sources, which could have important impacts on other beneficial uses. Therefore, the underlying balancing test that was used to develop the OTC policy would necessarily result in a different outcome when applied to ocean desalination facilities.
3(a)	The Regional Board's approval of Tentative Order R8-2011-0046 would conflict with the State's sound public policy designed to dramatically reduce the intake and mortality of marine life by merely shifting the harm from power plant cooling water intakes to new facilities for ocean water desalination that are not fully compliant with the strictest interpretation of CWC Section 13142.5(b).	As explained above, the OTC policy does not apply to ocean desalination facilities, nor does it express the State Board's position that intakes for all facilities should be eliminated. Indeed, the fact that the State Board is developing an entirely different policy for ocean desalination facilities underscores why it is improper to apply the OTC policy to the Poseidon facility. Stated more clearly, there is no public policy as described by Commenter that applies to the Poseidon facility or the proposed permit.
3(b)	Without employing the best site, design, technology and mitigation feasible to minimize the intake and mortality of marine life, new ocean desalination facilities can cause substantially more harm than existing power plant cooling water intakes, due to the increase in intake volume required for a continuous desalination process compared to the intermittent use by a "peaker" power generator used only when demand requires operation. In short, without some conditions placed in the Order to mitigate the intake and mortality of marine life, the continual use of the HBGS intake system by Poseidon increases the harm caused by an antiquated technology scheduled to be phased out of operation within the next decade.	We disagree that the Poseidon facility, as required under the permit pursuant to California Water Code (CWC) section 13142.5(b), does not employ the best site, design, technology, and mitigation feasible to minimize adverse impacts to marine life. Conditions, including mitigation requirements, have been included in the permit to reduce adverse impacts to marine life. Fundamentally, an ocean desalination facility will require the use of ocean water. Whether the Poseidon facility causes more harm through the use of intake structures than the operation of the Huntington Beach Generating Station ("HBGS") alone is somewhat immaterial, in part, because the operation of the HBGS facility is subject to different legal requirements (OTC policy and CWA section 316(b)) than the Poseidon facility (CWC section 13142.5.) As stated above, the permit complies with CWC section 13142.5.
4.	The proposed "short-term stand alone operation" of the Facility will violate the expressed conditions in the OTC Policy to discontinue withdrawing seawater at HBGS during times when the power plant is not generating electricity.	The Commenter cites Section C(2) of the OTC Policy for the proposition that the OTC Policy prohibits the Discharger from operating the HBGS seawater intake and outfall independently in a temporary (or "short term") stand-alone operational mode. Section (C) of the OTC Policy sets forth certain "immediate

No.	Comment	Responses
		and interim requirements," including Subsection (2), which provides that by "[n]o later than October 1, 2011, the owner or operator of an existing power plant unit that is not directly engaging in power-generating activities, or critical system maintenance, shall cease intake flows, unless the owner or operator demonstrates to the State Water Board that a reduced minimum flow is necessary for operations." As explained in responses 2 and 3(a) above, the OTC Policy applies to California's thermal power plants that currently withdraw water from the State's navigable waters using a once-through cooling system; it does not apply to the operation of desalination facilities. Furthermore, Section (C)(2) has no bearing on the Discharger's proposed temporary stand-alone operations because, as described in the Order, "the Discharger would operate the HBGS's seawater intake and outfall independently in a temporary stand-alone operational mode." *See* Order § II(B) (emphasis added). During such periods, the Discharger will assume operational control over the seawater intake system, through which it will withdraw water for desalination purposes, *i.e.*, not as cooling water intake. Because CWA Section 316(b) and its corresponding regulations only apply to cooling water intake systems, the OTC Policy does not impose any limitation on the Discharger's independent operation of the seawater intake system or its proposed temporary stand-alone operations which do not involve use of "cooling water". The Discharger's use of the intake structure during stand-alone operations, therefore, does not constitute "intake flows" as that term is used in Section (C)(2) of the OTC Policy.
5.	Withdrawing an additional 26.7 million gallons a day (MGD) of seawater to dilute the brine before it is discharged creates an additional intake and mortality of marine life that could be avoided by the use of superior technology – in clear violation of the mandates of the Water Code.	For reasons described in the Fact Sheet (see page F-25), the Regional Board finds that the existing technology for the Facility is the best technology available pursuant to CWC Section 13142.5(b). The intake tower is fitted with a velocity cap and large mammal exclusion bars. The velocity cap is one technology recommended by the State Water Board for minimizing impingement effects. Studies on the effectiveness of the HBGS's velocity cap have shown impingement reductions as high as 90%. The Facility's use of the HBGS existing intake structure as a stand-alone operation at a reduced flow rate of 126.7 MGD and the elimination of heat treatment will result in a 92% reduction in fish impingement compared to the HBGS' impingement losses at an assumed flow of 350 MGD. Because the Facility will be co-located with the HBGS, technological modifications to the existing intake and discharge outfall to minimize marine life effects must be compatible with the operations of both HBGS and the Facility. The Amendment of Lease PRC 1980.1 [State Lands Commission lease with AES Huntington Beach L.L.C. I (HBGS operator)] to authorize the

No.	Comment	Responses
		Facility's use of the intake and outfall provides that Facility operations cannot interfere with, or interrupt ongoing power plant operations. In the event of any long-term, stand-alone operations, pursuant to which the Discharger will have greater control over the intake, the Regional Board will evaluate whether any additional design or technology measures are feasible to minimize marine life intake and mortality. In addition, a recent study shows that additional technology, such as the addition of a diffuser on the outfall tower structure, will increase the higher salinity discharge footprint. (Supplemental Report on the Effects of a Retrofitted Diffuser on the Discharge Outfall for the Ocean Desalination Project at Huntington Beach, 7 January 2005; Updated: 18 February 2010 (SEIR Appendix AC), Dr. Scott Jenkins and Joseph Wasyl.) Specifically, the velocity-cap diffuser limits the dilution volume to only the lower half of the water column near the outfall where salinity is highest. Without the velocity cap, this hyper-saline discharge takes a vertical trajectory toward the sea surface, forming a surface boil, before subsiding back to the seafloor, passing through the full depth of the water column in the immediate neighborhood of the outfall, and thereby increasing the nearfield dilution. It should also be noted that a 20 MGD reduction in flow suggested by Commenter will result in an increase in the higher salinity footprint. The total fish impingement effects for 20 MGD are approximately 0.13lbs/day (which is less than 4% of the daily diet of one brown pelican). The total entrainment effects for 20 MGD are 0.003-0.05% of source water larvae. Therefore, the use of 20 MGD for dilution water best balances the intake and discharge effects to marine life. Furthermore, Commenter provides no specific citations to Water Code that may be evaluated for alleged violation.
November 21, 2011 letter from Orange County Coastkeeper and Surfrider Foundation – Specific Comments on Tentative Order Fact Sheet		
6.	In consideration of the Water Code and the recently adopted OTC Policy, the Regional Board should adopt a Tentative Order limiting the use of the existing OTC infrastructure by Poseidon to the actual seawater volume available from the HBGS's discharge as "source water" for the proposed desalination facility's "temporary stand alone operation." Further, the Facility's withdrawal of seawater for "in-plant dilution" of harmful brine discharges should also be limited to what is available from the actual discharge from HBGS in combination with the "feed water." Given the stated	As stated above, the OTC policy does not apply to the Poseidon facility or the proposed permit. Rather, the Regional Board is required to comply with section 13142.5 of the Water Code, which it has done in development of the proposed permit. Commenter's assertions to the contrary are incorrect. Furthermore, as stated in comments above, the limiting the withdrawal of seawater would significantly frustrate the operations of the facility. Further, the Order provides for mitigation measures that minimize marine life mortality to the extent such approaches are available and feasible. By proposing to limit the Discharger's seawater intake to the volume discharged by HBGS (*i.e.*, a variable amount that will not necessarily satisfy Discharger's intake flow

No.	Comment	Responses
	prohibitions on altering the existing intake system articulated in the Fact Sheet at Page F-25, section c (1), for the short-term, that is the best mitigation feasible for minimizing the intake and mortality of marine life, and is at least as protective of marine life as the letter and intent of the protections recently adopted in the OTC Policy.	requirements), Commenter proposes an operational limitation, as opposed to a "mitigation measure" as contemplated by Section 13142.5(b). To the extent that limiting the Discharger's intake flows to HBGS's variable discharges is deemed to constitute "mitigation" pursuant to Section 13142.5(b), this measure is not feasible in light of the Discharger's fundamental project objectives. Among the fundamental project objectives of the Facility as defined by the Discharger is the objective to use proven technology to affordably provide a local and reliable source of water not subject to the variations of drought or political or legal constraints. Order at F-22. Any condition limiting the Facility's seawater intake to the volumes discharged by HBGS would subject the end users of the Facility's water to an intermittent, unpredictable, and unreliable supply of water, which may be less than the supplies currently under contract.
7.	Once the HBGS has permanently discontinued withdrawals of seawater in volumes sufficient to supply the facility "feed water" or discontinues electrical generation, we agree with the recommendation that the facility be re-evaluated for strict compliance with Water Code section 13142.5(b) as a "stand alone facility." We only have two recommended alterations to this provision: first, the conditions for re-evaluating compliance with the Water Code should include the adoption of a statewide Policy on Ocean Desalination that is currently under development by the State Water Resources Control Board, and second the provision for re-evaluating the facility under permanent "stand alone operation" should be an enforceable "re-opener" condition of approval that includes the adoption of the statewide Policy on Ocean Desalination that is currently under development by the State Board.	Regarding the first recommended alteration, it is not standard Regional Board practice to reopen NPDES permits simply because applicable laws and/or regulations have changed or applicable policies have been adopted. To do so would create uncertainty in the permitting process and potentially create an inefficient use of resources (for example, reopening an NPDES permit for minor change a year before it was scheduled to be reissued). Therefore, we do not propose to change the reopener from discretionary to mandatory. Regarding the second recommendation, in the event that HBGS permanently ceases use of the once-through cooling water system or permanently ceases electricity generating operations at the current site, the Discharger is required to submit a separate Report of Waste Discharge within 180 days which evaluates any new design and technology requirements to conform with Water Code Section 13142.5(b).
8.	The rationale for ensuring the permit under consideration is at least as protective of marine ecosystems as the OTC Policy, as well as a condition in the Order prohibiting withdrawal of seawater in greater volumes than what HBGS withdraws is supported by the USEPAs response to comments during the Clean Water Act section 316(b) Phase II rule making process where the agency directly addressed the issue of co-located desalination facilities.	CWA Section 316(b) is inapplicable to desalination plants such as the Facility, and does not regulate the withdrawal of seawater for desalination (as opposed to cooling water) purposes. Accordingly, neither CWA Section 316(b) nor any USEPA responses to comments in connection with the Section 316(b) rulemaking process applies to the Facility's withdrawal of seawater for desalination purposes. It also should be noted that the USEPA suspended the Phase II rule on March 20, 2007. *See* Memorandum from Benjamin Grumbles, Assistant Administrator, USEPA Office of Water (March 20, 2007). Reliance on the suspended Phase II Rule and/or USEPA's response to comments in connection with the corresponding rulemaking is misplaced for this additional reason.

No.	Comment	Responses
9.	In their response to comments USEPA concluded that: "[t]he Phase II regulations apply only to facilities that generate and transmit or sell power, and therefore do not apply to desalination facilities unless they share an intake with a power plant" (emphasis added). USEPA went on to explain that in situations where "desalination plants share intakes with power plants…the 316(b) regulations would apply to the intake flow attributed to a desalination plant if the intake flow exceeds whatever regulatory threshold is established in the Phase I, II, or II regulations, but the power plant would be the permitted entity"8 (emphasis added). USEPA's approach implements sound public policy by recognizing the parasitic relationship desalination facilities have with coastal power plant intake systems. Co-located desalination facilities with higher water intake demands than the existing power plant must be required to minimize the intake and mortality of marine life.	We note that all facilities subject to CWC Section 13142.5(b), including desalination facilities, must use the best available site, design, technology, and mitigation measures feasible to minimize the intake and mortality of all forms of marine life. We further note that CWC Section 13142.5(b) applies to the Discharger's seawater intake. As indicated in the Order, when the Facility is operating in co-location mode with the HBGS and the HBGS's discharge is sufficient to meet the Discharger's intake requirements, the Facility's feed water intake requirements will not increase the volume or the velocity of the HBGS's cooling water intake, nor increase the number of organisms impinged or entrained by the HBGS's cooling water intake structure. The Discharger will comply with Section 13142.5(b) when operating under this condition, as it will be recycling the HBGS cooling water for desalination. When operating in temporary stand-alone mode (either when the HBGS is temporarily shut down, or when HBGS is operating but providing insufficient discharge to meet the Facility's requirements), the Facility's intake flow will be up to approximately 126.7 MGD, and CWC Section 13142.5(b) compliance is required. The Facility will utilize the best available site, design, technology and mitigation measures feasible to minimize marine life intake and mortality when operating in temporary stand-alone mode. If the HBGS permanently ceases operation of the once-through cooling water system, or permanently stops generating electricity at the current site, the Discharger shall within 180 days of receiving such notice submit a separate Report of Waste Discharge to evaluate any new design or technology requirements that may be necessary to conform to CWC Section 13142.5(b) requirements.
10(a).	The Fact Sheet itself appears to imply that modifications to the existing cooling water structure to minimize the intake and mortality of marine life cannot be accomplished without interruption of the power plant operations, and are consequently prohibited. Therefore, until improvements to the intake structure and/or other sites, designs or technologies become available, limiting the production capacity to the volume of water discharged by the HBGS is a preferred mitigation measures to reliance on an existing "after the fact" restoration project that has been prohibited by the federal courts.	To the extent the comment is suggesting that the Order relies on mitigation in lieu of best available and feasible site, design or technology, the comment is incorrect. The Order provides for the best available site, design and technology measures feasible to minimize the intake and mortality of marine life in temporary stand-alone mode. The Order and related materials demonstrate that intake and mortality will be minimized, in compliance with CWC Section 13142.5(b), even when the HBGS is not withdrawing seawater for power plant use (i.e., when the Facility is operating in temporary "stand-alone" mode). Thus, there is no basis to limit operation of the Facility to only water being withdrawn by the HBGS for power plant use. Such an approach likely would subject the end users of the Facility water to an intermittent and unpredictable supply of water, which may be less than the supplies under contract.

No.	Comment	Responses
		In response, however, the following sentence has been added to Finding C of the tentative order (page 9 of 33), "To ensure that any entrainment and/or impingement effects have been minimized in accordance with California Water Code Section 13142.5(b), the Facility will cap its temporary, stand-alone flows to a 12-month running average that shall not exceed the available mitigation credits, or the Discharger otherwise shall provide sufficient mitigation, as determined by the Executive Officer." To the extent the comment contends that courts have prohibited use of wetlands restoration mitigation as a form of the mitigation contemplated by CWC Section 13142.5(b), the comment is incorrect. The San Diego County Superior Court recently upheld the use of wetlands restoration to comply with CWC Section 13142.5(b) mitigation requirements for a desalination facility, in the context of rejecting a lawsuit filed by Surfrider Foundation captioned *Surfrider Foundation v. California Regional Water Quality Control Board, San Diego Region, et al.*, Case No. 37-2010-00090436-CU-WM-CTL, Tentative Statement of Decision, at 5 ("The Court finds CWC Section 13142.5(b) does not prohibit implementation of restorative mitigation measures when considering a project's "best available site, design, technology, and mitigation measures feasible.").
10(b).	In conclusion, allowance of the so-called "temporary stand alone operation", and the additional withdrawal of up to 126.7 MGD above what the power plant is discharging would undermine the benefits to our marine environment recently adopted in the OTC Policy.	The OTC Policy does not apply to desalination facilities. See Response No. 4.
11.	Further, much of the analysis in the Fact Sheet, and the notion that there is a need for a "temporary stand alone" operation of the facility, assumes a need for full production in the near term. However, in fact there are no water purchase agreements or long-term commitments to addition of the product water to any agency supply portfolio in a specified time period. With this in mind, full production capacity is not imminent in the near future. Therefore, the Permit can, and should, include a limit on production commensurate with the volume of water discharged by the HBGS.	The Regional Board disagrees with the Commenter's characterization of the existing agreements or contracts regarding water delivery from the proposed facility. The Regional Board has been informed that, to date, twenty one Orange County municipalities and retail and public water agencies have expressed an intent to purchase water from the Facility. These entities are organized as the *Huntington Beach Desalination Project Working Group* and are comprised of the following participants: Municipal Water District of Orange County, El Toro Water District, Irvine Ranch Water District, City of Orange, Laguna Beach County Water District, Moulton Niguel Water District, Santa Margarita Water District, South Coast Water District, Trabuco Canyon Water District, Golden State Water Company, City of Newport Beach, City of Fullerton, City of Santa Ana, City of Huntington Beach, City of Fountain Valley, City of Garden Grove, City of Anaheim, City of Seal Beach, City of Westminster, Mesa Consolidated Water District, and Orange County Water District. Furthermore, the Regional Board has been informed that eighteen working

No.	Comment	Responses
		group participants have already signed non-binding Letters of Intent (LOI) to purchase water from the Discharger. The intent on the part of Orange County's public water agencies to purchase water from the Discharger is memorialized in the Municipal Water District of Orange County's ("MWDOC") January 27, 2009 water purchase agreement Letter of Intent. In that letter, MWDOC confirmed that, "we are providing Poseidon with this letter of intent to purchase, subject to approval by the governing Boards of the group, 56,000 acre feet of water from Poseidon Resources' proposed Huntington Beach Desalination Facility…. [T]he interest on the part of MWDOC and the Poseidon Working Group in the Huntington Beach Desalination Facility is based on a collective desire to fully evaluate and pursue reliable/cost effective local water supply alternatives to further reduce dependence on imported water. As such, any water that we may be able to procure from the desalination facility is intended to replace imported water and further diversify our local supplies." Accordingly, based on this information, the Regional Board finds it is reasonable and appropriate to allow for a temporary stand-alone operations option in order to create a consistent water supply to satisfy the above-noted demand and interest.
12.	Attachment F of the Tentative Order relating to "Stand Alone" source water intake requirements requires significant modifications to reflect the changing realities present and anticipated to occur at the existing HBGS. As previously stated, the existing cooling water intake system utilized by HBGS is scheduled to be phased out due to generator upgrades by December 31, 2020. Therefore, the Tentative Order should make clear that seawater withdrawals for both "temporary" and "long-term" "stand alone operation" of the facility would be "new" withdrawals regulated by the Water Code. These withdrawals should be classified by the Regional Board as a departure from the existing permit authority granted to operate the HBGS in terms of additional water withdrawn what the power plant withdraws for the generation of electricity ("temporary stand alone operation") and once HBGS eliminates or reduces their withdrawal of seawater on a permanent basis to comply with the new OTC policy ("long-term stand alone operation"). In brief, we recommend that every step must be taken to minimize the intake and mortality of marine life.	As recommended by Commenter, the Order provides that seawater withdrawals for desalination purposes during both temporary and long-term, stand-alone operations are regulated by the CWC. The Order specifically authorizes the Discharger to utilize the HBGS intake pumps in a temporary stand-alone mode when the HBGS is temporarily shut-down or is operating but providing insufficient flows for the Facility's intake needs. Seawater withdrawals associated with the temporary stand-alone mode are fully analyzed by the terms of the Order and such withdrawals comply with CWC Section 13142.5(b). The recent purchase, restoration, and maintenance of 66.8 acres of tidal wetlands in the Project vicinity provides ongoing mitigation to offset the potential entrainment and impingement effects that may be associated with the withdrawal of a seasonally adjusted flow rate of 253.4 MGD resulting from the operation of HBGS Units 3 and 4. In accordance with its monitoring and reporting obligations, the Discharger shall monitor the influent flow to the Facility on a continuous basis and submit an annual report to the Regional Board containing flow and other monitoring data obtained during the previous year. [see Attachment E ("Monitoring and Reporting Program"), Section III at E-5); Id., Section X(A) ("General Monitoring and Reporting Requirements")]. The Discharger is also required to provide relevant HBGS flow data in the annual report to enable the Regional Board to confirm that ongoing mitigation offsets entrainment and/or impingement effects that may be associated with the Facility's temporary stand-alone operations. To

No.	Comment	Responses
		ensure that any entrainment and/or impingement effects have been minimized in accordance with California Water Code Section 13142.5(b), the Discharger is required to cap its temporary, stand-alone flows to a 12-month running average that shall not exceed the available mitigation credits, or the Discharger otherwise is required to provide sufficient mitigation, as determined by the Executive Officer. In the event that HBGS permanently ceases use of the once-through cooling water system or permanently ceases electricity generating operations at the current site, the Discharger is required to submit a separate Report of Waste Discharge within 180 days which evaluates any new design and technology requirements that may be necessary to conform with CWC Section 13142.5(b). Seawater withdrawals for stand-alone operation of the Facility are classified as water other than water the HBGS withdraws for the generation of electricity and/or critical system operations.
13.	Pages F4 and F5 of the Fact Sheet includes provisions for the discharge of up to 126.7 MGD of dechlorinated product water from the reverse osmosis process back into the HBGS discharge pipeline when it is not possible to deliver water to the regional potable water system. The text goes on to suggest "it may be necessary to temporarily discharge dechlorinated product water from the reverse osmosis process back into the HBGS discharge pipeline." Further, the report states: "During these temporary periods, the maximum allowable flows returned to the ocean would not exceed 126.7 MGD…." Please clarify if these conditions in the permit would be applicable during "temporary stand alone" and/or "permanent stand alone" operations. If these conditions would be applicable during stand-alone procedures, please explain why shutting down the Facility when the delivery of product water in infeasible is not considered as a mitigation method to minimize the intake and mortality of marine life. A provision to discontinue operation of the facility when it is not delivering the product water would be consistent with, if not mandated by, the Water Code‟s mandate to minimize the intake and mortality of marine life.	Shutting down the Facility when the delivery of product water to the regional potable water system is not possible is not a feasible mitigation method because operations during these periods are essential to the provision of potable water during other times. The Facility is expected to run 24 hours a day, 7 days a week, 365 days a year. Under certain non-routine operating conditions, the Tentative Order allows the Discharger to temporarily discharge the pretreated seawater and reverse osmosis process wastewater into the HBGS discharge pipeline. These non-routine operating conditions include initial start-up operations, immediately before or after certain maintenance operations, or in responding to emergency conditions or potential public health and safety concerns. Under such non-routine conditions, it may be necessary to temporarily return all or a portion of the pretreated seawater back into the HBGS discharge pipeline instead of routing it to the reverse osmosis units. During such conditions, it may not be feasible to deliver product water to the regional potable water system.
14(a).	In addition, on page F7, the report states that, "[b]etween 2006 and 2010, the HBGS's annual average intake flow through the power plant ranged from 200 MGD to 268 MGD." It is our understanding that much of that flow was for	It would be speculative to attempt to identify the number of days when the cooling water discharge would not meet or exceed 126.7 MGD. This condition, however, is anticipated by the Order in that the Order requires the Discharger to comply with CWC Section 13142.5(b) during any such condition. While in

No.	Comment	Responses
	operation of Units 3 and 4, and that these units are currently being sold and scheduled for retirement. The report should make clear how much intake volume was the result of operating Units 3 and 4 during the time between 2006 and 2010 and how much intake volume would be reduced after their retirement.	recent history all four units have been available at the HBGS, between 2006 and 2010 the HBGS annual average seawater intake flow through the power plant ranged from 200 MGD to 268 MGD. See Order at Section II(B). The HBGS has an existing energy contract with a third-party energy supplier and will continue to respond to calls from ISO to supply electricity to the businesses and residents of Orange County. On April 1, 2011, AES Huntington Beach (operator of the HBGS) submitted to the State Water Board a plan for compliance with the State Water Board's "Water Quality Control Policy for the Use of Coastal and Estuarine Waters for Power Plant Cooling." As described in AES' OTC Policy Implementation Plan for HBGS, the existing contract for energy production will require the use of at least one 63.5 MGD ocean water intake pump for critical system maintenance at all times and up to 257 MGD would be required during periods when both HBGS Units 1 and 2 are producing energy. AES' implementation plan described HBGS Units 1 and 2 in operation until the end of the second quarter of 2022.
14(b).	The report also fails to identify how much of the cumulative flows or annual average of daily flows was unrelated to actual power generation (which is now prohibited by the "Immediate and Interim Requirements" in the OTC Policy). Furthermore, the report does not identify the number of days or duration of times when the volume of intake was significantly less than this annual average. Please revise Attachment F to include information that would more accurately reflect a reasonably foreseeable number of days when the cooling water discharge would not meet or exceed 126.7 MGD and consequently demand "temporary stand alone operation."	The OTC Policy does not apply to desalination facilities. See Response Nos. 2 and 4. We have reviewed the Facility and concluded that it complies with CWC Section 13142.5(b) during temporary stand-alone and co-located operations. See Response Nos. 3(a), 15(a), 16(a) and 16(b). The requested information is not necessary for analysis of the Facility's compliance with CWC Section 13142.5(b).
15(a).	Further, the comments on the Subsequent Environmental Impact Report ("SEIR") on page F-15 do not adequately interpret the relevant laws. California Water Code section 13142.5(b) regulates both cooling water intakes and other industrial withdrawals of seawater. While the Clean Water Act is specific to cooling water intakes, the Water Code does not distinguish between the numerous potential seawater withdrawals – inclusive of cooling water intakes. Therefore, federal case law on cooling water intakes is relevant to interpreting section 13142.5(b).	The *Riverkeeper* cases are not relevant to interpreting CWC Section 13142.5(b) as those cases held only that restoration mitigation does not qualify as a "technology" within the meaning of CWA Section 316(b) and that restoration alone cannot satisfy CWA Section 316(b)'s mandate to use the "best technology available" with regard to "the location, design, construction, and capacity of cooling water intake structures." *Riverkeeper, Inc. v. U.S. E.P.A.*, 358 F. 3d 174, 189-90 (2d Cir. 2004) ("*Riverkeeper I*"); *Riverkeeper, Inc. v. US. E.P.A.*, 475 F. 3d 83, 110 (2d Cir. 2007), *rev'd sub nom on limited grounds Entergy Corp. v. Riverkeeper*, *Inc. et al.,* 556 U.S. _ [129 S. Ct. 1498] (2009) ("*Riverkeeper II*"). In contrast to CWA Section 316(b), which does not expressly provide that "mitigation" can equal "best technology available" or otherwise authorize use of mitigation, CWC Section 13142.5(b) expressly provides that "mitigation" may be used to "minimize intake and mortality" of marine life. CWC § 13142.5(b).

No.	Comment	Responses
		CWA Section 316(b) contains no reference to "restoration," a point found highly relevant by the Second Circuit in *Riverkeeper*. As noted, CWC Section 13142.5(b) expressly provides for the application of mitigation; and wetlands commonly have been permitted by the State Board and Regional Boards for the purpose of accomplishing mitigation. Unlike in the *Riverkeeper* cases, the Order does not rely on mitigation in lieu of technology; the Order instead requires use of the best available and feasible site, design, technology *and mitigation*. Here, we first determined whether there are any feasible and available site, design or technology measures to minimize intake and mortality, before considering mitigation. The Order does not substitute mitigation for technology. CWA Section 316(b) is not applicable to desalination plants, as the Commenter elsewhere acknowledges, and the *Riverkeeper* cases do not address CWC Section 13142.5(b) in any way. Therefore, the *Riverkeeper* cases are not applicable to the Facility or the Regional Board's issuance of a permit for the Facility. The position asserted in the comment was rejected on the above grounds by the San Diego County Superior Court, when this same argument was advanced by Surfrider Foundation in a lawsuit captioned *Surfrider Foundation v. California Regional Water Quality Control Board, San Diego Region, et al.*, Case No. 37-2010-00090436-CU-WM-CTL. Tentative Statement of Decision, at 3-5.
15(b).	There is no reasonable distinction between water withdrawn for "temporary stand alone operations" and "long term stand alone operations" as both are "new" withdrawals of seawater and should be regulated similarly under the permit. We recommend a clarification in the Order stating that "temporary operation" of the facility may not withdraw seawater in volumes that exceed the discharge of cooling water from the HBGS. This would make a conditional permit for the operation of the facility that is consistent with the mandates of the Water Code.	See Response Nos. 4 and 16(a).
16(a).	We recommend deletion of the finding on "entrainment and impingement" that: "Based on discussion in Section III E, when operating under long-term stand alone conditions, the Facility can comply with mitigation requirements under CWC section 13142.5(b) by maintaining HBGS"s existing marine life mitigation program." First, this conclusory statement is	The finding has been deleted and replaced with the following statement: "If the Discharger submits a Report of Waste Discharge for approval of its long-term, stand-alone operations, the Regional Board will consider whether, by continuing the maintenance of AES's existing 66.8-acre tidal wetlands mitigation program, the Facility's long-term stand-alone operational scenario is in compliance with the mitigation requirements of Section 13142.5(b)."

No.	Comment	Responses
	premature if it is the Regional Board's intent to re-open the permit for full consideration when the power plant is permanently ceases to withdraw seawater in volumes necessary for the facility as it's currently planned.	
16(b).	On page F-20, the report states that Clean Water Act, "Section 316(b) does not apply to seawater desalination facilities, including this Facility. However, it is important to note that while the recently adopted State Water Board OTC Policy may not have "direct application" to the facility, case law on interpretation of the Clean Water Act section 316(b) is relevant when interpreting Water Code section 13142.5(b). This is significant because much, if not all, of the mitigation of the intake and mortality of marine life associated with the temporary or long term "stand alone operation" of the facility relies on "after the fact restoration." *Riverkeeper, Inc. v. U.S. E.P.A.*, 384 F.3d 174, 189-190 (2d Cir. 2004) is instructive to interpreting Water Code section 13142.5(b) for several reasons. First, the Water Code does not distinguish between seawater withdrawals for cooling water and other industrial withdrawals. Second, while it is true the OTC Policy made some distinctions between the use of seawater for these different purposes, the State Water Board did not explicitly distinguish the prohibition of "after the fact restoration" that was included in the OTC Policy. Third, while there is a mention of "mitigation" in the Water Code section 13142.5(b), the term is followed by the operative language to "minimize the intake and mortality of marine life." "After the fact restoration" efforts, even if they were successful, would not mitigate the "intake and mortality" of marine life. By definition "after the fact" restoration efforts are to "replace" the marine life after its "intake and mortality" – and the Water Code clearly mandates minimizing the intake in the first place. Therefore we strongly recommend eliminating any reliance on the restoration of wetlands imposed on HBGS as a condition of its CEC permit as "mitigation" for ongoing withdrawals of seawater for either the power plant or the proposed desalination facility. In short, these "after the fact" restoration efforts have been prohibited since that condition was placed on the HBGS permit.	The Riverkeeper cases are not relevant to interpreting CWC Section 13142.5(b). CWC Section 13142.5(b) expressly authorizes use of "mitigation" as one way to "minimize the intake and mortality" of marine life, and provides that mitigation measures, together with the best available site, design and technology, will be used for each new coastal industrial plant. The Regional Board disagrees with Commenter's statutory interpretation of CWC Section 13142.5(b). Additionally, CEQA is instructive regarding a reasonable interpretation of the term "mitigation." Under CEQA, "mitigation" is defined to include "[c]ompensating for the impact by replacing or providing substitute resources or environments," and "[r]ectifying the impact by repairing, rehabilitating or restoring the impacted environment." 14 Cal. Code Regs. ("CEQA Guidelines") § 15370 (c), (e). CEQA cases also have specifically upheld off-site wetlands restoration mitigation like the HBGS's mitigation plan, as well as other mitigation designed to offset the net environmental effects of a project. *See, e.g.*, *Cal. Native Plant Soc. v. City of Rancho Cordova*, 172 Cal. App. 4th 603, 625-26 (2009) (denying challenge to offsite vernal pool and wetland creation plan imposed to mitigate for loss of vernal pool habitat); *Mira Mar Mobile Cmty v. City of Oceanside*, 119 Cal. App. 4th 477, 489 (2004) (mitigation requiring creation or replacement of coastal sage scrub held to "*minimize* significant environmental effects"); *Envtl. Council of Sacramento v. City of Sacramento*, 142 Cal. App. 4th 1018, 1039 (2006) (holding plan to create hawk and snake habitat "*minimized* and fully mitigated" impacts to both species under CEQA and California Endangered Species Act).

No.	Comment	Responses
16(c).	Coastkeeper and Surfrider are concerned that the Site Analysis section of the Tentative Order is not placing the necessary emphasis on the requirement that the proposed site be the "best available" location feasible to "minimize the intake and mortality of all forms of marine life." The Regional Board is not charged with reviewing the most convenient sites, rather reviewing those sites that "minimize the intake and mortality of marine life."	As the comment notes, CWC Section 13142.5(b) requires that the site be "feasible." The feasibility analysis includes consideration of project objectives, and a site that cannot feasibly attain most of the basic project objectives is infeasible. See Response Nos. 3(a), 38, and 40.
17(a)	Section 2(a)(2) of the Order suggests the proposed location is the best available site based upon "proportional mortality" rates of marine life populations near HBGS as compared to other power plants in California. Here, proportional mortality is the proportion of observed deaths from entrapment or impingement in a defined population divided by the proportion of deaths expected from this condition in a standard population. The Tentative Order relies upon "other power plants in California," when the Regional Board should have analyzed the proportional mortality based upon the use of the HBGS intake system on a discrete local population and assemblage of marine life. Section 2(a)(2) reads that the "estimated levels of proportional mortality are much less than the estimates from other coastal power plants in California." This, according to the Tentative Order, is attributed to the homogeneity of the coastline as compared to rocky coastlines or estuarine areas elsewhere along the California coast. Comparing the proportional mortality at the HBGS (an area without the equivalent diversity as compared to rocky coastlines or estuarine areas elsewhere along the California coast) skews the results and will lead to a conclusion that it will not have the level of harmful impact on local marine life.	The comment appears to be referring to Section III.E.2.a.2 of the Fact Sheet. As discussed therein, the Discharger did analyze the proportional mortality based upon the use of the HBGS intake system on a discrete local population and assemblage of marine life, specifically the marine life population which surrounds the HBGS. Use of site-specific data such as this yields accurate and scientifically relevant mortality estimates for the Facility. The Order relies on Tenera's February 2011 report entitled, *"Entrainment and Impingement Effects from Operation of the Huntington Beach Desalination Facility in Standalone Mode*." Based on this site-specific study, in the vicinity of the HBGS's intake and outfall, there are no Areas of Special Biological Significance (ASBS), no Marine Life Protection Areas (MLPA), and no state or federal threatened or endangered species that are expected to be affected by the Facility's seawater intake or discharge. The Discharger has provided extensive site-specific analysis of the estimated entrainment effects from the stand-alone operation of the Facility. (See Fact Sheet, page F-34.) Specifically, the Facility's entrainment was projected using the widely used Empirical Transport Model ("ETM"), which estimates mortality rates from entrainment resulting from water intake systems. Based on a fairly constant pumping rate with an annual average of 126.7 MGD, larval entrainment losses due to long-term stand-alone operation of the Facility are projected to affect only a small fraction of the larvae (0.02–0.28%) of the source water populations. Studies show that the most abundant larval fish in the area (CIQ gobies) would experience high rates of natural mortality at the intake location because the intake is located in an area that does not provide a suitable habitat to sustain resident adult populations, and there is a low likelihood that larvae that have been flushed into the area of the intake would be able to return to the shallow bay habitats that meet the species' life history requirements. These site-specific analyses support the finding in the tentative Order that the proposed site is the best available site pursuant to CWC Section 13142.5(b).

No.	Comment	Responses
17(b)	It is important at this point to note that the Water Code mandates minimizing the intake and mortality of marine life without any required showing of "significance", distinguishing this law from others like the California Environmental Quality Act.	We agree that the Water Code provides a different standard of review than CEQA's "significant impact" threshold. CWC Section 13142.5(b) mandates "the best available site, design, technology, and mitigation measures feasible . . . to minimize the intake and mortality of all forms of marine life," regardless of whether or not there are "significant impacts" to marine life under CEQA.
18.	The site analysis section of the Tentative Order similarly misleads the reader in Sections 2(a)(4-9) by assuming the plant would operate as a "co-located" facility. The rationale provided in these subsections concluding this is the best available site feasible to minimize the intake and mortality of marine life presupposes receipt of HBGS wastewater discharge as an available intake source to the desalination facility. For example, Section 2(a)(4) argues co-locating the proposed desalination facility with the existing HBGS minimizes intake and mortality because it uses "existing HBGS intake and discharge infrastructure" and reduces the amount of source water required for desalination purposes "by using water discharged by HBGS." The OTC policy and HBGS implementation plan to comply with OTC Policy in 2020 will eliminate the withdrawal of seawater in volumes necessary for the desalination facility. Therefore, the infrastructure described in this section, absent any modifications to minimize the intake and mortality of marine life, and the reliance on that infrastructure in an analysis determining whether this location satisfies the mandates of the Water Code undermines the intent of the State Board adopting the OTC Policy.	The tentative Order addresses operations in co-located mode and the temporary stand-alone operational scenario, and both scenarios are analyzed in the Order. The tentative Order will expire in 2017, three years prior to the 2020 deadline cited in the comment. We are not aware of any reason that these operational scenarios would not continue during the life of the permit (and Commenter has provided none). That the Facility will use the intake infrastructure of the HBGS does not undermine State Board intent in adopting the OTC Policy (see, e.g., Response No. 2). In the event that HBGS permanently ceases use of the once-through cooling water system or permanently ceases electricity generating operations at the current site during the term of this permit, the Discharger is required to submit a separate Report of Waste Discharge within 180 days which evaluates any new design, technology, and mitigation requirements to conform with Water Code Section 13142.5(b). Additional review would be necessary, in part, because when operating in long-term stand-alone mode, the Discharger will have more discretion and flexibility with respect to the operation of the intake and outfall structure and the Board can reconsider whether other design and/or technology features have been rendered feasible.
19.	Section 2(a)(5) of the Order argues the use of an existing pipe will result in lower intake velocity and therefore lower impingement effects. The rationale provided in the subsection relies on the fact the pipe is "capable of transporting more than four times the volume of water required by the Facility." This section fails to reference any study estimating any numerical reduction in the intake and mortality of marine life, proportional mortality, nor entrainment of organisms. In fact, there is no mention of any reduction of marine life mortality from entrainment of organisms. We recommend further documentation to substantiate this statement before the Regional Board relies upon it prior to concluding whether the site is the best available for minimizing the intake and mortality of marine life.	We disagree that further documentation is necessary. The Order cites and relies on a February 2011 report from Tenera Environmental, entitled "*Entrainment and Impingement Effects from the Operation of the Huntington Beach Desalination Facility in Stand-alone Mode.*" (Fact Sheet, page F-33.) This report shows the effectiveness of the HBGS's velocity cap and demonstrates that the velocity cap results in impingement reductions as high as 90%. The Order also cites to the 2011 *Arcadis Evaluation of Alternative Intake Technologies for the Reduction of Impingement and Entrainment Mortality.* This study shows that the proposed operation of the HBGS seawater intake system under long-term, stand-alone mode would result in an estimated average daily impingement of 11 fishes weighing 0.26 kg (0.64 lb), and the estimated average daily impingement rate for shellfish would be approximately 6 individuals weighing 0.09 kg (0.198 lb). The study also demonstrates that

No.	Comment	Responses
		the Discharger's use of the HBGS's existing intake structure as a stand-alone operation at a reduced flow rate of 126.7 MGD and with the elimination of heat treatment will result in a 92% reduction in fish impingement compared to the HBGS's impingement losses based on a flow rate of 350 MGD.
20.	A thorough analysis of the "design" of the facility should include reducing the production capacity and/or other alternatives to make the best intake "technologies" feasible. As we have said, the site, design, technology and mitigation measures should be considered as integrated parts to minimize the intake and mortality of marine life.	CWC Section 13142.5(b) requires the Discharger to "use the best available site, design, technology, and mitigation measures feasible … to minimize the intake and mortality of all forms of marine life." The Regional Board disagrees that analysis of the design should include alternatives that would be inconsistent with the fundamental objectives of the project. Production of 50 MGD per day of desalinated product water is necessary to meet the objectives of the Project. Specifically, the objectives of the Facility are to provide a local and reliable source of potable water to supplement imported water supplies available to the City of Huntington Beach and the Orange County region, reduce local dependence on imported water, and help meet the Facility's planned contribution of desalinated water to regional water supply goals. The Facility will supply Orange County with up to 8% of its drinking water needs. The Facility's location is critical for serving Huntington Beach and the surrounding water districts in a feasible manner because of its close proximity to the existing intake and outfall structure and key delivery points of the regional water distribution system.
21(a).	The analysis of the facility design should also include alternative discharge technologies that meet the mandates of the CWC Section 13142.5(b) to minimize the intake and mortality of marine life. As proposed, the design feature of withdrawing additional seawater for "in-plant" dilution would increase the intake volume by approximately 25%, thereby increasing entrainment of marine life.	See Response No. 5.
21(b).	Alternative brine discharge technologies have been successfully employed on seawater desalination facilities elsewhere, and should be analyzed as an option here for eliminating the necessity of withdrawing additional seawater for so-called "in-plant dilution."	See Response No. 5.
22(a).	Section 2(b)(1) of the Fact Sheet implies that the current HBGS seawater withdrawal employs the best technology available for minimizing the intake and mortality of marine life. This contradicts the findings and resulting adoption of the State Board's OTC Policy. Therefore, the continued use of the HBGS intake for "temporary stand-alone operation" of the facility would undermine the "Immediate and Interim Requirements" to discontinue the withdrawal of seawater	See Response No. 4.

No.	Comment	Responses
	during times when HBGS is not generating electricity.	
22(b).	Further, as stated above, withdrawing additional seawater for "in-plant dilution" during the "temporary stand alone operations" violates the clear mandates of the Water Code section 13142.5(b) to use the best design to minimize the intake and mortality of marine life.	See Response Nos. 5 and 61.
23.	The Fact Sheet appears to assume that "temporary stand alone operation" is necessary without any substantiating evidence. We recommend deleting this section of the Fact Sheet.	In its application, the Discharger noted that the Facility will need to operate in the temporary stand-alone (1) when HBGS is temporarily shut down; or (2) when HBGS is operating but its discharge volumes are not sufficient to meet the Facility's intake requirements. Therefore, the Order and Fact Sheet address this mode of operation to ensure compliance with CWC Section 13142.5(b), should these occur.
24.	We recommend a condition on the permit prohibiting "temporary stand alone operation" of the facility at times when the HBGS is not discharging enough water for the full design production capacity, and limiting the production of the facility to what is actually discharged from the HBGS for the facility's "source water."	For reasons provided in prior comments, we reject these recommendations as infeasible and impracticable given the fundamental objectives of the Facility.
25.	Section 2(b)(2) of the Fact Sheet contradicts the findings of the OTC Policy by asserting the use of the existing intake system minimizes entrainment and impingement effects. The State Board possessed reports on the intake and mortality of marine life from the existing HBGS intake system during the development of the OTC Policy, yet the State Board concluded the existing intake failed to employ the best technology available to minimize the intake and mortality of marine life. As with the proportional mortality discussion in our critique of the site analysis, comparing other areas of the coast with different habitats and fish assemblages is irrelevant when analyzing the proposed facility's compliance with the Water Code section 13142.5(b). We recommend deleting this section as it is irrelevant to the analysis of the design and operation of the facility in either "temporary stand alone operation" or "long term stand alone operation." We also recommend replacing it with an analysis of the intake and mortality of marine life in terms of the proportion of the population and assemblage of species residing in the affected area, as well as the species and life stages of the species that may transit the area through their own mobility or be transported through the affected area in the ocean current.	The comment relies on a policy for power plants. Desalination facilities and OTC thermal power plants are fundamentally different in their use of intake water; thus the means by which BTA would be determined is also very different. See OTC Policy Substitute Environmental Document at Section 3.5, page 57 ("For existing OTC power plants, the most effective technology is closed-cycle wet cooling, which reuses a small volume of water several times to achieve the desired cooling effect. Desalination, on the other hand, is an extractive process for which the volume of water used cannot be limited without impairing the final production.") Whereas OTC power plants can minimize entrainment and impingement effects by switching to closed-cycle wet cooling and significantly reducing intake flows, a desalination facility cannot employ such technology. The comment confuses the regulations and legal standards that apply to large existing OTC thermal power plants under CWA Section 316(b))—which do not apply to desalination plants—and CWC Section 13142.5(b), which applies to new coastal desalination facilities. While a given technology may not satisfy the BTA standards that apply to OTC thermal power plants under CWA Section 316(b), it may represent the best available design or technology measure feasible to minimize the intake and mortality of marine life under CWC Section 13142.5(b). As discussed in the Order, "[t]he Facility's use of an existing offshore deep

No.	Comment	Responses
		water intake is a design feature that minimizes entrainment and impingement effects due to the location of the plant's offshore intake along a fairly homogenous stretch of coastline dominated by sandy habitat that provides mush [sic] less habitat for fishes than nearshore rocky coastal or estuarine areas." See Fact Sheet at Section 2(b)(2), page F-25 (citing Entrainment and Impingement Effects from Operation of the Huntington Beach Desalination Facility in Stand-alone Mode, Tenera Environmental, February 2011). This conclusion, which is drawn from an application of CWC Section 13142.5(b), has no bearing on the OTC Policy (which applies separate and distinct standards under CWA Section 316(b)), and does not contradict the findings of the Policy. The OTC Policy did not make findings relative to the Facility under CWC Section 13142.5(b), as the OTC Policy implements CWA Section 316(b), not CWC 13142.5(b), and expressly does not apply to desalination plants. The Order properly accounts for the intake and mortality of marine life. The Order applies well-established scientific methods for analyzing the entrainment and impingement effects that may be associated with the Facility's operations, pursuant to the mandate of CWC Section 13142.5(b). *See, e.g.*, Entrainment and Impingement Effects from the Operation of the Huntington Beach Desalination Facility in Stand-alone Mode, Tenera Environmental, February 2011; *see also* Arcadis Evaluation of Alternative Intake Technologies for the Reduction of Impingement and Entrainment Mortality (2011). See Response Nos. 2, 4, and 18 above related to the applicability of the OTC Policy. See Response No. 17(a) regarding analysis of the Facility's estimated entrainment and impingement effects. See also Fact Sheet, page F-26, which states: "The velocity cap is one technology recommended by the State Water Board for minimizing impingement effects in order to comply with the Water Quality Control Policy for the use of Coastal and Estuarine Waters for Power Plant Cooling. *Id.*; *Water Quality Control Policy For The Use Of Coastal And Estuarine Waters For Power Plant Cooling, Final Substitute Environmental Document (SED pg. 100).* Studies on the effectiveness of the HBGS's velocity cap have shown impingement reductions as high as 90%. *Id.* No physical changes to the intake structure are proposed or required, and the velocity cap would remain in place during the Facility's temporary stand-alone operations."

No.	Comment	Responses
26.	The Sub-section 2(b)(3) is an irrelevant comparison between the volume and velocity of flows for cooling the HBGS and what would be required in a "temporary stand alone operation". As noted above, the withdrawal of seawater for "temporary stand alone operation" and for "long term stand alone operation" of the facility are "new" withdrawals of seawater under CWC Section 13142.5(b) and must be analyzed and enforced independent of the current cooling water intake. We recommend deleting this sub-section.	Subsection 2(b)(3) of the Fact Sheet states that "[w]hen operating in a temporary stand-alone mode, the volume and velocity of the Facility's flows through the inlet (bar racks) and fine screens will be less than HBGS's permitted flows at these locations." This supports the finding in the Order that CWC Section 13142.5(b) compliance is established when the Facility is operating in co-located mode. This information also provides a relevant comparison between the volume and velocity of the Facility in stand-alone operation and the currently-permitted intake levels of the HBGS. There is an environmental benefit to operating an intake structure at flows substantially below design capacity, as the Facility proposes to do in stand-alone mode (127 MGD compared with HBGS's currently permitted intake flow of 514 MGD). This demonstrates that stand-alone operation of the Facility will result in relatively lower velocities than if an intake that matched the Facility's feedstock needs had been constructed. Lower velocities result in relatively lower impingement, all other factors being equal. See Response No. 12.
27.	Subsection 2(b)(4) defends the design of the project by arguing the existing intake infrastructure meets best available design criteria even though the technology has been proven to significantly harm marine life to a degree necessitating a more thorough Water Code Section 13142.5(b) analysis. The statement in the Order that the "[u]nder stand alone operations, the Discharger has little control over the intake structure," ignores the fact that Poseidon has complete control over the design of the facility and consequently controls the production capacity during "temporary stand alone operation."	The primary design feature of the Facility is the direct connection of the desalination plant to the HBGS's cooling water system pipelines, which allows the Facility to use the power plant screened water as both source water for desalination and blending water to reduce the salinity of the desalination plant's concentrate prior to discharge. This minimizes seawater intake and associated entrainment and impingement required for the desalination plant. This design feature also avoids significant impacts to coastal resources and access that would result from the construction, operations and maintenance of a new seawater intake. While the HBGS remains operational, the Discharger has little control over the intake structure, and any modifications to the existing intake to minimize intake and mortality must be compatible with the operations of HBGS. The Discharger is prohibited under its State Lands Commission lease from implementing any measures to minimize intake and mortality that interfere with or interrupt ongoing power plant operations. This is explained at page F-26 of the Fact Sheet. The Commenter's statement that the Discharger "has complete control over the design of the facility", therefore, is not correct as any intake-related design features that might minimize intake and mortality are constrained by the fact that the intake must remain compatible with and not interrupt ongoing power plant operations. The Commenter confuses best technology for power plant operations with the determination of best technology for desalination facility operations. The OTC Policy is not applicable to the determination of whether the Facility complies

No.	Comment	Responses
		with CWC Section 13142.5(b). This is explained at page F-26 of the Fact Sheet. If the HBGS's cooling water system is permanently decommissioned, and the Facility is to operate in long-term, stand-alone mode, the Discharger will need to demonstrate that the Facility complies with the best available and feasible design and technology criteria of CWC Section 13142.5(b). This is addressed in the Order at page 9.
28.	The incorporation of an intake system that reduces marine life intake and mortality, such as subsurface intake, would closely resemble a design matching the CWC Section 13142.5(b) criteria.	A subsurface intake would need to be both "available" and "feasible" to resemble a design matching the CWC Section 13142.5(b) criteria. This has been demonstrated not to be the case. The SEIR prepared and certified for the Facility included an analysis of the feasibility and environmental impact of several types of alternative intake systems, pursuant to the Alternative Intake and Discharge Designs Alternative. The SEIR concluded that the use of horizontal wells, vertical beach wells, and infiltration galleries in lieu of the proposed use of the HBGS intake system was either infeasible and/or had greater environmental impacts than the proposed project. (SEIR at Section 6.4.) The 2011 Water Globe Consulting Evaluation of Alternative Desalination Plant Subsurface Technologies also contains a detailed site-specific hydrogeologic review of the feasibility of subsurface intakes in the vicinity of the proposed Facility. This site-specific review demonstrates that subsurface intakes (e.g., beach wells, slant wells, horizontal wells, and filtration galleries) are technologically infeasible and/or environmentally inferior.
29.	Elsewhere in Section 2(b)(4) the Regional Board claims it will "reevaluate the Facility's compliance with Water Code section 13142.5(b)" if the future yields "different and/or better" feasible designs for long-term stand-alone operations. The State Board is currently developing a "Policy on Ocean Desalination" that will address the design of desalination facilities and the use of once through cooling technology as an intake system for operation by a facility operator. Coastkeeper and Surfrider recommend the Regional Board include a clear and concise "reopener" in this permit that allows for a full de novo review and modification of this NPDES permit once that policy is adopted by the State Board, and provide a timeline and guidance for Poseidon"s compliance with the policy.	See Response No. 7.

No.	Comment	Responses
30.	We recommend the Regional Board take a holistic review of alternatives that include amending the "design" production capacity and subsurface intake mechanisms to better enable the use of best "technology" available for minimizing the intake and mortality of marine life.	See Responses Nos. 20 and 28.
31.	We also recommend a thorough analysis of alternative discharge technologies that would eliminate the need for increased intake volume for in-plant dilution, thereby minimizing, if not eliminating, the intake and mortality of marine life through use of the best design and technology for brine dilution.	See Response No. 5.
32.	Coastkeeper and Surfrider want to repeat that the analysis of the best technology available should not be confined by the "design" of the facility's production capacity, nor by its "site." Rather, the site, design, and technology must be considered as a whole - not discrete parts. It is the proposed continuation of antiquated technology that concerns our organizations most in Water Code Section 13142.5(b)'s analysis.	CWC Section 13142.5(b) requires use of the best available site, design technology and mitigation measures feasible to minimize marine life intake and mortality. By its terms, the statute does not appear to express a preference for any of the permitted means (individually or in combination) over another. Here, the Regional Board has analyzed each requirement of CWC Section 13142.5(b) and determined that the Facility will use the best available site, design, technology and mitigation feasible to minimize marine life intake and mortality. See Response Nos. 10(a), 20 and 28
33.	Our concerns were especially heightened when we failed to read any analysis of operating the facility at production capacities that are properly limited to the volumes of cooling water discharged from uninterrupted operation of HBGS. Section (c)(1) states the "facility's use of the intake and outfall provides that entrainment and impingement minimization measures cannot interfere with or interrupt ongoing power plant operations. To be consistent with the OTC Policy, and in particular, the prohibition of withdrawing seawater when the HBGS is not generating electricity, "temporary stand alone operation" should be prohibited. In fact, the prohibitions on employing entrainment and impingement minimization measures for this new withdrawal of seawater strengthen our assertion seeking limited production capacity from the facility under the current operation of HBGS. Therefore, we strongly recommend that the Tentative Order be amended to support a condition in the permit that "temporary stand alone operation" is prohibited and production capacity from the proposed facility is limited	To the extent that this comment suggests that the OTC Policy prohibits temporary stand-alone operations, see Response No. 4. See also, Response Nos. 2, 6, and 18.

No.	Comment	Responses
	by the "source water" available from HBGS"s discharge volumes.	
34.	Section 2(c)(2) and (4) briefly describes the benefits of the horizontal velocity cap and mammal exclusion bars and subsequent reduction in impingement rates. However, these descriptions merely addresses half of the harmful intake equation. A reduction in impingement numbers due to the velocity cap and the exclusion bars ignore the loss of marine life due to entrainment. Nothing in these sections refer to or recommend technological modification to reduce high entrainment numbers. Again, we recommend that without any attempt by the Discharger to minimize the intake and mortality of marine life from entrainment during the proposed "temporary stand alone operations", the withdrawal of seawater in volumes above that used for the generation of electricity should be prohibited.	Under CWC Section 13142.5(b), the Discharger is obligated to use the best available technology feasible to minimize the intake and mortality of marine life. In addition to considering limitations attributable to the HBGS's operations, the Discharger's feasibility analysis considered several factors, including project timing, economic concerns, environmental costs, and technological limitations. The comment is mistaken to the extent it suggests that a single factor was used in the technology evaluation. The Discharger conducted a thorough review of design and technology features, including alternative intakes, alternative screening technologies, and alternative desalination technologies, to minimize marine life mortality under co-located operating conditions. With regard to alternative intakes, the Facility's studies confirm that none of the alternative intakes evaluated are capable of delivering the 126.7 MGD of seawater needed for environmentally safe operation of the Facility. The Discharger found and we agree that alternative intakes that might avoid or minimize marine life intake or mortality are infeasible or would cause greater environmental impacts than the proposed use of the HBGS intake. The Discharger also evaluated several potential technology modifications to the existing intake system. The 2011 Arcadis Evaluation of Alternative Intake Technologies for the Reduction of Impingement and Entrainment Mortality analysis compared screening technologies including: (a) fish nets, light, acoustic and air bubble barriers upstream of the existing intake; (b) new screening technologies (e.g. wedge wire screens) to replace the existing velocity cap and mammal exclusion bars; and (c) fine mesh vertical traveling screens. As reflected in the Fact Sheet on pages F-2 and F-30, taking into account economic, environmental and technological factors, the Regional Board finds that these modifications to the existing intake system are not feasible. As reflected in the Fact Sheet on page F-30, the installation of variable frequency drives (VFD) is considered to be the best technology feasible to minimize the intake and mortality of marine life at this time, as a VFD system at the intake pump station could reduce the Facility's total intake flow compared to constant speed design, resulting in the proportional decrease in entrainment associated with Facility operations. By reducing the intake flow and velocity, the Facility will further minimize any potential for impingement.

No.	Comment	Responses
		The Regional Board's evaluation of the proposed project is limited to minimization applicable to co-located and temporary stand-alone operation of the Facility – not a long-term, stand-alone operation of the Facility. Evaluation of additional or different technologies at the intake would be necessary if the HBGS permanently ceases use of the once-through cooling water system or permanently ceases electricity generating operations at the current site, as the Discharger is required to submit a separate Report of Waste Discharge within 180 days which evaluates any new design and technology requirements to conform with Water Code Section 13142.5(b).
35	Section 2(c)(3) of the Fact Sheet compares the reduction of impingement from the proposed "temporary stand alone operation" of desalination facility to impingement occurring from the operation of the HBGS facility. The implication is the Poseidon facility is an environmental improvement over the existing intake from HBGS. However, the section does not state that the withdrawal of seawater over and above the volumes necessary for the generation of electricity at HBGS is a "new" intake and governed by the Water Code section 13142.5(b). Therefore, it is irrelevant to compare the intake and mortality from impingement used by the operation of HBGS to the new withdrawal of seawater for "temporary stand alone operation." In fact, the proposed desalination facility could continue impingement decades after the cooling water intake system will be prohibited from use. The fact is, the continued use of the existing intake structure after the power plant discontinues it's current "once through cooling" practice will be an entirely new withdrawal of seawater, and entirely new cause of the intake and mortality of marine life. We recommend this sub-paragraph either be deleted, or modified to better explain how the "new" intake of seawater will affect the cumulative intake and mortality of marine life from the addition of "temporary stand alone operation" at this site.	See Response Nos. 12, 26.
36	The analyses of "Subsurface Intakes Alternatives" are inadequate. First, there is no mention of the potential benefits of minimizing the intake and mortality of marine life from these alternatives. For example, the Fact Sheet at 6(d) lists numerous adverse impacts of a "seafloor infiltration gallery, but fails to point out that the impacts are mostly temporary in that they result from placement of the galleries.	The construction, maintenance and operation of a seafloor infiltration gallery is not a proven technology for a Project of this scale, and the adverse environmental impacts associated with this type of intake would be both temporary during construction and long term. These impacts are summarized in the Fact Sheet and discussed in more detail in the SEIR and 2011 Water Global Consulting Evaluation of Alternative Desalination Plant Subsurface Technologies. While a seafloor infiltration gallery could likely reduce or eliminate impingement and entrainment effects, the environmental, technical and economic effects render the galleries an inferior and infeasible technology.

No.	Comment	Responses
37	Section 6(d)(4) of the Fact Sheet states that there will be "…combined loss of 2,800 square feet of beachfront property, for a combined loss of over 2.1 acres of beachfront property and related impact to public access." The analysis fails to recognize that much of this necessary infrastructure could be constructed below surface and have little or no long-term impacts on the beachfront property or coastal access.	A seafloor infiltration gallery has never been constructed and operated on a scale comparable to the proposed Facility, rendering it an unproven technology that cannot feasibly satisfy Project objectives. The analysis of the subsurface intake alternatives, conducted in the SEIR and 2011 Water Globe Consulting Evaluation of Alternative Desalination Plant Subsurface Technologies, included an assumption that the intake infrastructure would be placed below grade to the maximum extent feasible, and that the referenced impacts to coastal resources and access are related to those components of the intake infrastructure that require access for operation and maintenance (e.g., pump stations and electrical facilities.)
38.	Section 6(f) considers the energy demand of such a proposed alternative. This has little relation with the minimization of marine life mortality, nor the technological feasibility of this alternative intake system.	This project is reviewed under CWC Section 13142.5(b), which requires that the project use the best available site, design, technology, and mitigation measures feasible to minimize the intake and mortality of all forms of marine life. The energy demand associated with the subsurface intakes is a relevant consideration in assessing economic, environmental and technological feasibility, and therefore is appropriately considered by the Regional Board as part of its CWC Section 13142.5(b) analysis. See Response Nos. 40 and 16(b).
39.	Second, the opening paragraph of this section of the Fact Sheet concludes that these alternatives are "technologically infeasible." However, the analysis of the alternative intakes only indicates certain short-term technological challenges to the construction, but nothing in the analysis suggests that "subsurface intakes" are technology infeasible.	See Response Nos. 20 and 28.
40.	It is important to note that in the definition of "Not Feasible" in the recently adopted OTC Policy, the State Board concluded that "Cost is not a factor to be considered when determining feasibility under Track 1." It is reasonably predictable that the prohibition of cost considerations will be adopted in the Policy on Ocean Desalination currently under development by the State Board.	Although the term "feasible" is not defined in the Water Code, it has been reasonably construed to have the same meaning as that term is defined in the California Coastal Act, which was adopted through the same bill that adopted Section 13142.5(b). CEQA also shares the Coastal Act's definition of feasible, which is "capable of being accomplished in a successful manner within a reasonable period of time, taking into account economic, environmental, social, and technological factors." Cal. Pub. Res. Code §§ 30801 and 21061.1. See *Surfrider Foundation v. California Regional Water Quality Control Board, San Diego Region, et al.*, Case No. 37-2010-00090436-CU-WM-CTL, Tentative Statement of Decision, at 8 ("The Court agrees with the parties that the CEQA/Coastal Act definition of feasibility is appropriately applied to the Water Code analysis."). The OTC policy is inapplicable.

No.	Comment	Responses
		See Response Nos. 2 and 4.
41.	Third, much of the analysis is speculative. For example, the Fact Sheet uses terms such as “the potential” long term effects of dewatering local marshes, “possible interception” of contaminated groundwater, “possible interception” of injection water for the seawater barrier, “potential subsidence” of roads and structures. These statements are not only speculative and inappropriate, but have no relevance to the mandate to minimize the intake and mortality of marine life.	CWC Section 13142.5(b) requires technology measures to be “available” and feasible. Alternative subsurface intakes have never been successfully built and operated on a scale comparable to the proposed Facility, and cannot feasibly satisfy Project objectives. The studied alternative subsurface intakes are technologically infeasible, more environmentally damaging than the proposed project, and cost prohibitive, based in part on technological limitations explained in reports from Water Globe Consulting, Evaluation of Alternative Desalination Plant Subsurface Intake Technologies, February, 2011, and from PSOMAS, Feasibility of Extraction Wells for Poseidon Desal Plant Feed Water Supply, 2007. The reports state that the marshes which are located just east of the subsurface alternative locations are within the drawdown zone. Drawdown of the marshes would cause degradation of the currently restored marshes and would have an impact on and cause mortality not only to marine life in the marsh, but also on other biological species. We disagree with Commenter’s suggestion that the Regional Board may not consider adverse environmental impacts to coastal habitat or resources that might arise from its permitting of the construction of a new seawater intake, aside from marine life intake and mortality.
42.	There is no analysis of how some of the issues raised in this section could be mitigated by reducing the designed production capacity of the facility.	See Response No. 6.
43.	Water Code 13142.5(b) should be read in a way to harmonize all the potential sites, designs, technology and mitigation to minimize the intake and mortality of marine life.	See Response Nos. 10(a) and 32.
45.	The design capacity of the facility, and the analysis based on the assumed design, appears to preclude strict enforcement of CWC Section 13142.5(b).	See Response No. 4.
46.	We strongly recommend a more thorough analysis of a facility with a “design” production capacity with an intake technology that results in the “best” minimization of the intake and mortality of marine life.	See Response Nos. 4, 27, and 32.
47.	We strongly recommend re-consideration of the site of the Facility given that the existing open ocean intake for the HBGS cooling water has already been determined inadequate for meeting the mandates to minimize the intake and mortality of marine life. While this determination was based on enforcement of the Clean Water Act, it is important to note that had this analysis been applied to a “new” power plant’s proposed cooling water system, the Water Code	See Response No. 18.

No.	Comment	Responses
	section 13142.5(b) would have also prohibited open ocean intakes.	
48.	Given that the Water Code makes no distinction between seawater withdrawals for “cooling” from seawater withdrawals for other “industrial purposes”, the same standards for minimizing the intake and mortality of marine life are applicable to this proposed Facility.	We agree that all facilities subject to CWC Section 13142.5(b), including desalination facilities, must use the best available site, design, technology, and mitigation measures feasible to minimize the intake and mortality of all forms of marine life.
49.	The analysis and conclusions in the Fact Sheet are inadequate and mostly irrelevant to consideration of enforcing the mandates of CWC Section 13142.5(b).	We disagree. The analysis and conclusions in the Fact Sheet support findings by the Regional Board that the Facility will comply with the mandates of CWC 13142.5(b)
50.	In regards to short-term “stand alone” operations, this analysis only provides more reasons to limit the production of the facility to what can be accomplished from the volume of water discharged from HBGS. The Fact Sheet documents that modifications to the existing infrastructure to better minimize the intake and mortality of marine life are effectively prohibited until the power plant discontinues use of the intake structure.	See Response Nos. 4 and 6. Pursuant to CWC Section 13142.5(b), the proposed technology for the Facility is the best available technology feasible to minimize intake and mortality to marine life under co-located and temporary, stand-alone operations. Because different and/or better technologies may be feasible in the future for long-term, stand-alone operations, the Regional Board will reevaluate the Facility's compliance with the design and technology requirements of CWC Section 13142.5(b) under those conditions.
51.	Withdrawal of seawater in excess of what is discharged by HBGS would be a “new” withdrawal of seawater for industrial purposes, and trigger immediate enforcement of the mandates in CWC Section 13142.5(b). Therefore, compliance with the Water Code mandate to utilize the best “mitigation” measure feasible would require limiting the “temporary” operation of the Facility by prohibiting the withdrawal of seawater in excess of what is available from the HBGS discharge.	See Response Nos. 12, 26, and 35; see also Response No. 6.
52.	The long-term “stand alone” operations analysis is premature and irrelevant.	The tentative Order addresses operations in co-located mode and the temporary stand-alone operational scenario. In the event that HBGS permanently ceases use of the once-through cooling water system or permanently ceases electricity generating operations at the current site, the Discharger is required to submit a separate Report of Waste Discharge within 180 days which evaluates any new design, technology, and mitigation requirements to conform to Water Code Section 13142.5(b) for long-term, stand-alone operations.
53.	Several coastal power plants are proposing the use of screening technologies for volumes of seawater withdrawals in excess of the 100 mgd needed for this Facility. It is, as yet, unclear if those technologies will succeed at minimizing the intake and mortality of marine life within the parameters of the OTC policy. Nonetheless, the consideration of	Comment noted. See Response No. 7.

No.	Comment	Responses
	alternative technologies, designs, sites and mitigation for long-term "stand alone" operation is a question that is not before the Board in granting this permit. If the Board is to reconsider interpretation and enforcement of Water Code section 13142.5(b) once HBGS permanently ceases withdrawal of seawater in volumes sufficient for operation of the proposed facility at this design capacity, and/or the State Water Board adopts a Policy on Ocean Desalination – that would be the time for consideration of modifications to the existing intake system.	
54(a).	We think it is appropriate that the Discharger be put on notice that all of the conditions in this permit are temporary. We recommend a "Re-Opener" provision in this temporary permit explicitly stating that all possible revisions to the design, site and technology of the facility to minimize the intake and mortality of marine life will be considered when the permit is re-opened for a de novo review.	It is somewhat unclear what the Commenter is suggesting. This Order is not temporary; however, it may be reopened in certain circumstances and for specific purposes. This does not, however, create a temporary permit. It should be noted that, as an NPDES permit, the Order has a five year term and all provisions shall be reevaluated at the time of reissuance. See also Response Nos. 1, 7, and 29
54(b).	We agree that these variable frequency drives are effective at ensuring the Facility is not withdrawing more seawater than necessary. We disagree that this technology, in and of itself, is the best approach for minimizing the intake and mortality of marine life for the so-called "temporary stand-alone operation" of the Facility. Consequently, once again, we strongly recommend that full enforcement of the Water Code requires mitigating the intake and mortality of marine life by limiting the source water intake for the Facility to what is available from the HBGS discharge on any given day.	See Response Nos. 3(a), 6 and 10(a).
55.	Variable Frequency Drives (*VFDs) are a technology that only marginally minimizes the withdrawal of seawater and are therefore not, in and of themselves, fully compliant with the mandates of the Water Code.	The installation of a VFD system at the intake pump station will reduce the total intake flow of the desalination plant compared to constant speed design, resulting in a proportional decrease in entrainment associated with desalination plant operations. By reducing the intake flow and velocity, the Facility will further minimize any potential for impingement. Under these circumstances, the Discharger has identified the installation of VFDs as the best technology that is available and feasible to minimize the intake and mortality of marine life at this time. To the extent that the comment implies that the Facility is solely relying on the installation of VFDs to comply with the mandates of CWC Section 13142.5(b), we disagree. We have specifically evaluated the Facility to ensure full compliance with Section 13142.5(b). The conditions set forth in the Order provide for the use of the best available site, design, technology, and mitigation measures feasible to minimize the intake and mortality of marine life.

No.	Comment	Responses
		See, e.g., Response No. 3(a)
56.	Case law prohibits the use of "restoration measures" in lieu of the best technology available for minimizing entrainment and impingement of marine life under the Clean Water Act. The Second Circuit Court of Appeals first decided this issue in Riverkeeper I, which dealt with the proposed USEPA regulation of seawater intakes for "new" facilities withdrawing more than 50 MGD for cooling purposes. Because Riverkeeper I dealt with the regulation of new facilities, this decision is particularly instructive to interpreting the Water Code Section 13142.5(b) mandate of the use of the best site, design, technology and mitigation feasible to minimize the intake and mortality of marine life. While specifically identifying these mandates for cooling purposes at "new" facilities, the Water Code goes beyond the regulation of seawater intakes in the Clean Water Act and includes seawater withdrawals for all industrial purposes. Importantly, the Water Code does not distinguish between the mandates for minimizing the intake and mortality of marine life from cooling water withdrawals and other industrial purposes. Therefore, new withdrawal of seawater for cooling would be regulated by the Water Code as well as the Clean Water Act.	See Response Nos. 15(a), 16(c) and 48. To the extent that the comment is suggesting that CWC Section 13142.5(b) should be interpreted consistent with how the courts have interpreted CWA Section 316(b), it should be noted that the federal statute and the California statute are different in key respects, e.g., CWC Section 13142.5(b) specifically provides for the use of mitigation and that site, design, technology and mitigation measures used to minimize the intake and mortality of marine life must be "feasible."
57.	The prohibition of "restoration measures" articulated in *Riverkeeper I* must be consistent with the interpretation of "mitigation" in the Water Code. Give that there is no distinction, it stands to reason that the prohibition of "after the fact" restoration efforts are prohibited as mitigation for seawater desalination facilities, including this proposed Facility.	See Response Nos. 15(a) and 16(b).
58(a).	Further, the plain language in the Water Code would, in and of itself, prohibit "after the fact" restoration measures. The mandate to use the "best site, design, technology and mitigation feasible" is clearly meant to "minimize the intake and mortality of marine life." By definition, after the fact restoration efforts do nothing to mitigate the intake and mortality of marine life.	See Response Nos. 15(a) and 16(b).
58(b).	This has been further articulated in the State Board's "OTC Policy." Restoration in lieu of using the best technology for reducing marine life mortality is only allowed on a temporary basis until the power plant operator meets compliance with the technology-based mandates of the Policy.	See Response No. 4.

No.	Comment	Responses
58(c).	The Fact Sheet heavily relies on decisions by other California regulatory agencies to permit the withdrawal of seawater for cooling the HBGS Units 3 & 4, and the imposition of restoration measures in those permits. Those permits and condition of restoration measures would be prohibited under today's law. Transfer of that condition on existing permits to this new facility would be equally prohibited by the law.	It is somewhat unclear what Commenter is suggesting. To the extent the comment is suggesting that the California Energy Commission's permitting of the HBGS could be retroactively invalidated, the comment is beyond the scope of this Order. To the extent the comment suggests that, by virtue of federal court case law or otherwise, restoration measures are prohibited as mitigation for the Facility under CWC Section 13142.5(b), see Response No. 15(a) and 16(b) above.
58(d).	Further, the Fact Sheet includes predictions of the potential entrainment and impingement of marine life in "stand alone operation" and concludes these impacts are not significant. Unlike an analysis in an Environmental Impact Report under the mandates of CEQA, the Water Code has no similar "significance threshold" nor does the term "mitigation" have the same meaning under CEQA and the Water Code.	The adoption of the Order is exempt from CEQA review under CWC Section 13389. But the Regional Board appropriately reviewed the Facility's SEIR (certified by the CEQA lead agency), for water quality related issues, as part of its consideration of the Order. We agree that the Water Code provides a different standard of review than CEQA's "significant impact" threshold. CWC Section 13142.5(b) mandates "the best available site, design, technology, and mitigation measures feasible . . . to minimize the intake and mortality of all forms of marine life," regardless of whether there are "significant impacts" to marine life under CEQA. See Response Nos. 16(b) and 17(b).
59.	The Water Code clearly mandates "the best" measure for minimizing the intake and mortality of marine life. This cannot be interpreted to allow "second best" mitigation that would reduce the impacts to level described in CEQA as "not significant."	The comment appears to somewhat misinterpret CWC Section 13142.5(b). CWC Section 13142.5(b) requires the use of "best available" *and* "feasible" site, design, technology, and mitigation, which elements must be read together to inform when the goal of minimizing intake and mortality has been reached. See also Response Nos. 16(c) and 38.
60.	A strict interpretation of the language in the Water Code mandates that mitigation measure minimize the "intake and mortality" of marine life in the first place. "After the fact" restoration measures are prohibited in that, by definition, they do nothing to minimize the intake and mortality of marine life. Further, decisions in federal courts in *Riverkeeper I* and *Riverkeeper II* invalidate the conditions of approval in the CEC permit requiring restoration of wetlands in lieu of mandating the best technology available for minimizing entrainment and impingement. The allowance of "after the fact" restoration measures would be prohibited if that permit were to be issued under current law, and transferring credit for those restoration measures in a permit issued for a new facility is equally prohibited under today's laws.	See Response Nos. 15(a) and 16(b). The contention that federal court decisions mandate retroactive invalidation of the California Energy Commission's permitting of the HBGS is not applicable to the Tentative Order, and no response therefore is required. To the extent the comment suggests that, by virtue of federal court case law, restoration measures are prohibited as mitigation for the Facility under CWC Section 13142.5(b), see Response No. 15(a) above.

No.	Comment	Responses
	We strongly recommend that this section of the Fact Sheet be re-written, and the permit accurately reflect that "after the fact" restoration is not allowable as mitigation under today"s law. It is of no consequence or importance whether those restoration measures were permitted under past law, they are not legal today.	
61.	Throughout the Tentative Order, there appears to be a pre-determined assumption that the best design of the facility to meet the mandates of both the Ocean Plan and the Water Code section 12134.5(b) is to increase the intake volume by approximately 26.7 MGD for what could be described as "in-plant dilution" – that is, dilution prior to discharge of the brine. This is plainly inconsistent with the mandates of the Water Code section 13142.5(b), as well as the dilution requirements in the Ocean Plan.	See Response No. 5 regarding the CWC Section 13142.5(b) analysis of this Project design feature. It is reasonable to allow use of seawater to dilute brine before the concentrated seawater is discharged back to the ocean. This design element reduces the higher salinity footprint at the outfall structure, and minimizes the mortality of all forms of marine life associated with the Facility.. During co-located operations, the 20.1 MGD of dilution water is obtained from previously used cooling water, and constitutes a second use of that wastewater without loss of marine life from intaking seawater directly. During temporary, stand-alone operations, some or all of the 20.1 MGD of dilution water may come directly from the ocean. In this condition the use of the seawater facilitates compliance with dilution criteria that are designed to protect the ocean. On balance, this practice constitutes a prudent practice and part of the Facility's design, helping to satisfy CWC Section 13142.5(b). We disagree that the Ocean Plan prohibits the use of seawater to dilute brine before discharge to the ocean. The California Ocean Plan does not address in-plant dilution, and the absence of this issue from the Ocean Plan does not support a conclusion that in-plant dilution is thus prohibited. The Ocean Plan addresses issues relevant to the establishment of Clean Water Act standards. In accordance with requirements established by the Clean Water Act and guidance published by EPA, the Ocean Plan: • designates beneficial uses of ocean waters, • establishes technology-based effluent standards, • establishes water quality-based receiving water standards, and • establishes provisions for implementing these standards, including provisions for implementing EPA mixing zone guidance on attaining water quality-based standards. In-plant dilution or blending occurs upstream from the point of discharge, and is not relevant to the establishment of water quality-based standards, the establishment of mixing zones, or the translation of water quality-based standards into NPDES effluent limitations. As such, the Ocean Plan need not

No.	Comment	Responses
		address in-plant dilution or blending, nor must it prohibit in-plant dilution or blending for purposes of reducing effluent salinity at the point of discharge. The Ocean Plan includes a number of specific prohibitions, none of which address the use of in-plant blending or dilution. Similarly, CWC Section 13142.5(b) establishes no limitations on the use of in-plant dilution.
62.	The Fact Sheet analyzes compliance with the 7.5 to 1 "dilution ratio" assuming an additional intake volume of approximately 26.7 MGD over and above what is required for "source water" intake. This additional water withdrawal during "temporary stand alone" as well as "long term stand alone" operations is not the best technology for minimizing the intake and mortality of marine life in accordance with the Water Code section 13142.5(b), nor is it consistent with the language in the Ocean Plan for the area of dilution. First, as explained above, there are superior brine dilution technologies that could eliminate the need for withdrawing additional seawater.27 Yet the Tentative Permit fails to consider superior brine dilution alternatives, much less analyze them for compliance with the mandate in the Water Code to employ the best technology available for minimizing the intake and mortality of marine life.	See Response Nos. 5 and 61.
63.	The Ocean Plan clearly states that the zone of initial dilution (ZID) is bounded by the "edge of the outfall structure" and the outer boundaries of the ZID. A strict read of this language would preclude so-called "in-plant dilution." Given that the Tentative Order has determined that the 7.5:1 "dilution ratio" for the dissipation of heat being discharged from the HBGS is appropriate for the discharge of the brine waste from the proposed Facility, we assume the rule would be generally applicable to all ocean discharges. It is incomprehensible, and contrary to sound public policy, to allow for the withdrawal of seawater strictly for the purpose of "in-plant dilution".	See Response No. 61.
64.	For example, one can only imagine how a wastewater treatment facility would operate if they were allowed to withdraw seawater for "in-plant" dilution of their waste stream. In the extreme case, under the allowance for "in-plant" dilution, the wastewater facility could conceivably withdraw enough seawater to dilute the effluent to the point where it no longer violates their discharge requirements. This	The "extreme" situation hypothesized by Commenter bears little relationship to the dilution process authorized in this Order. See also Response Nos. 5 and 61.

No.	Comment	Responses
	would allow the facility to avoid the use of any technology to treat the effluent in the first place. While this analogy is not perfect, the results are similar to what is being proposed in this Tentative Permit. That is, the Discharge is not required to employ any technology to ensure adequate dilution of the brine waste discharge within the ZID, they are instead being allowed to add to the intake and mortality of marine life by withdrawing additional seawater to simply dilute the brine and other waste materials prior to discharge.	
65(a).	Please explain why preferable dilution technologies, such as "pressurized spray brine" or any other alternative, were not considered and analyzed as a superior alternative to simultaneously meet the dilution standards, meet the clear language of the Ocean Plan to do so in a "mixing zone" starting at the "edge of the outfall structure", as well as minimizing the intake and mortality of marine life from the additional sweater withdrawal volume from "in-plant" dilution", as mandated in the Water Code.	See Response Nos. 5 and 61.
65(b).	We strongly recommend that the Final Order include a clear prohibition on the withdrawal of 26.7 MGD of seawater, or any withdrawal of seawater, for dilution of the brine and other waste being discharged from the Facility. Instead, the Final Order should include a provision either mandating the use of the best technology available for diluting the brine in the ZID without the necessity for withdrawing additional seawater, and/or a reduction in the production capacity so that the volume of brine waste discharge will dilute within the ZID without the necessity of an additional withdrawal of seawater. These provisions in the Final Order are necessary to ensure full compliance with Water Code section 13142.5(b), as well as the strictest interpretation of the Ocean Plan.	See Response Nos. 5 and 61.
66.	The Final Order should include a condition mandating "real time monitoring" and requirements to reduce the production capacity to shut down the Facility if the water quality standards are not being met. Examples of this monitoring technology, and examples of when a similar seawater desalination plant was required to reduce its production capacity to meet water quality standards in Australia can be found in Attachment A to this letter.	The Monitoring and Reporting Program set forth in Attachment E to the Order ensures the Facility is compliant with all applicable state and federal monitoring requirements and sufficient for ensuring compliance with provisions in the permit.
67.	The Regional Board must contemplate the direct and indirect consequences of increasing nearly a ton of additional iron to the levels off Huntington Beach. Coastkeeper and Surfrider	The Order has been revised to clarify that the Facility will not discharge additional iron (ferric chloride or ferric sulfate) to the ocean (see Fact Sheet, page F-9.), and the Monitoring and Reporting Program has been modified to

No.	Comment	Responses
	are alarmed at high levels of additional iron discharge off Huntington Beach's shoreline and Poseidon's brief and dismissive analysis of the potential consequences of contributing nearly a ton of additional iron through the existing discharge pipe. Oceanic iron loading has been identified with numerous and mixed environmental consequences which have not been adequately analyzed in relation to the approval of the proposed Poseidon discharge. Some of the negative environmental consequences identified through rigorous scientific studies conducted over nearly two decades can be analyzed through the regulatory constraints placed upon Poseidon in this Tentative Order.	include a monitoring and reporting requirement for iron. Ferric chloride or ferric sulfate (iron) will only be used if a media filtration pretreatment system is employed, in which case the Discharger will employ a process to remove solids from backwash of the media filtration system. Once removed, the Discharger will properly dispose of the ferric- (i.e., iron) containing solids (e.g., by landfill). These solids will not be discharged via the Facility's outfall. No ferric chloride or ferric sulfate will be used if a membrane pretreatment system is employed.
68(a).	Poseidon's waste iron discharge will contribute to nutrient loading resulting in objectionable aquatic growth and the degradation of indigenous biota in violation of the NPDES Permit. According to the approved DSEIR, Poseidon will discharge at least 1,831 pounds of iron from DP 001 per day at a concentration fifteen times greater than the normal seawater concentration of 0.30 mg/L. Elevated levels of iron are a consequence of reverse osmosis pre-treatment methods using iron sulfate or iron chloride as a chelating agent that coagulates organic solutes and dissolved materials and also precipitates a fraction of the trace elements.	See Response No. 67.
68(b)	As Poseidon's DSEIR states, "iron is an important ocean nutrient (essential for the growth of phytoplankton) and is likely to be biologically assimilated by primary producer organisms (mainly phytoplankton) in the discharge plume."31 By increasing the availability of nutrients, thereby stimulating the growth of phytoplankton, there is the potential that stressed fish stocks may actually improve. However, there is the equally likely scenario that the discharge will produce a similar increase in the bacteria that feed on phytoplankton. Phytoplankton growth from iron discharges, according to the Woods Hole Oceanographic Institution (WHOI), may "just as equally favor less-useful pathways in the food web, making more jellyfish or algae, especially harmful algal blooms that could have impacts on fish, birds, and even marine mammals up the food chain."	Comment noted. See Response No. 67.
68(c).	The term harmful algae blooms (HABs) is scientific shorthand used to describe a variety of algae blooms of	Comment noted. See Response No. 67.

No.	Comment	Responses
	microscopic and macroscopic marine algae which produce toxic effects on humans or other organisms, physical impairment to fish and shellfish, discoloration and/or nuisance conditions from severe odors, or severe impacts on marine ecosystems due to oxygen depletion or overgrown habitat.33 HABs generally begin when heavy winter rains flush nutrients from the land into the ocean and wind blows warm surface water away, resulting in cold nutrient-rich upwelling, dormant phytoplankton then hatch into swimming cells once the water warms concluding with phytoplankton. feeding on nutrients and multiplying. Phytoplankton expand exponentially, with a single cell producing up to 8,000 offspring in a single week. After the phytoplankton production hits its zenith the organic materials sink and the decomposition of materials reduces the availability of oxygen, producing anoxic conditions and causing significant marine die-offs. In addition, several off the phytoplankton offspring produce toxins that are stored in their bodies and bioaccumulate in species that feed on the algae and have sickened people humans who consume affected shellfish. Since 1993, scientific experiments into intentional open ocean iron discharge (referred to as “iron fertilization”) proves algae can be stimulated to grow rapidly with the addition of a sufficient input of iron. According to an article in the Proceedings of the National Academy of Sciences, these artificially generated algae blooms “produced diatoms in the genus Pseudo-nitschia, which produce a neurotoxin called domoic acid.” Domoic acid causes seizures in higher vertebrates, such as marine mammals. A scientific team from the University of California, Santa Barbara, concluded the “addition of iron from natural or artificial sources can stimulate the rapid growth of this harmful algae.” Mary Silver, the lead author of the UCSB study, described how the neurotoxin producing Pseudo-nitschia usually has little effect, but that “the species is incredibly responsive to iron, often becoming dominant in algal blooms that result from iron fertilization.” “Any iron input,” she continued, “might cause a bloom of cells that make the toxin….which will get into the food chain, as it does in the coastal zone.” Consistent flows of high iron concentrations of nearly a ton a	

No.	Comment	Responses
	day in perpetuity from the proposed desalination facility could contribute to increased HABs and low-oxygen events off Huntington Beach. Scientific experiments conducted in international ocean waters testing iron fertilization since 1993, twelve in total, have produced plankton blooms similar to those associated with HABs. The impact of these tests and the contribution of significant amounts of additional iron into ocean waters has led at least one scientist to conclude that they "do not, and likely will not, have the capability to say how this may impact marine food chains."	
69.	Coastkeeper and Surfrider acknowledge the experiments conduced testing iron fertilization concern oceanic conditions and their conversion into coastal conditions may not translate into the same results. However, Poseidon acknowledges the daily contribution of a nearly a ton of iron off the Huntington Beach shoreline will at least have a direct impact on the rapid production of phytoplankton. Increased phytoplankton production off the California coast also produces various types of algae, including Pseudo-nitzschia, the domoic acid producing diatom commonly linked with HABs. Our chief concern regarding the discharge of additional iron off the coast is the unknown impact this significant nutrient contribution will have on the marine ecosystem in and around the discharge pipe.	See Response No. 67.
70.	The Regional Board must consider the aesthetically undesirable impact iron discharge could have on the ocean surface. The Tentative Order prohibits discharged wastewater from causing "aesthetically undesirable discoloration of the ocean surface." Iron discharged from desalination plants has recently caused discoloration of surface water in plants using reverse osmosis systems. The Ashkelon desalination facility in Israel caused significant concerns within the Ministry of Environmental Protection (Ministry) following the discharge of "red water" from the discharge pipes leaving the facility. The red water discharge occurs nearly every hour for approximately ten to twenty minutes and can be seen from a distance of 1 kilometer from the outfall depending on weather conditions. The Ashkelon facility discharges approximately 450 tons per year as opposed to Poseidon's proposed discharge of approximately 365 tons per year.	See Response No. 67.

No.	Comment	Responses
	The Ministry became seriously concerned with the red discharge after discovering the influence of the iron discharge on the receiving water and the lack of research on the impact of the effect of such iron discharges to the marine environment. As a precaution, the Ministry intended to seek assurances that the Ministry of Finance would require substantial reductions in iron discharges before contracting for additional desalination facilities in Israel. The Israeli Ministry encouraged policy makers to follow the precautionary principle concerning the adoption of desalination facilities along the coastline in recognition of the sparse scientific information available on the marine and coastal impacts these facilities may cause. The precautionary principle, as used by the Ministry, states that "when an activity raises threats of harm to human health or the environment, precautionary measures should be taken even if some cause and effect relationships are not fully established scientifically." The Ministry concluded that in accordance with the precautionary principle, ferric should be removed from desalination discharge, "not only for the discoloration and aesthetic matter, but also for the preventing of a potential risk for the marine environment due to high loads and accumulation with time." Coastkeeper and Surfrider strongly encourage the Regional Board to consider the Israeli example of Ashkelon and order a continued monitoring of the discharge to account for potential ecosystem changes and harmful sediment concentrations originating from the proposed increase in iron concentrations leaving DP 001.	
71(a).	The Regional Board must consider the accumulation of iron in sediments in and around the desalination plant's discharge point. The Tentative Order requires the waste discharge to be free of "settleable material or substances that may form sediments that may form sediments that will degrade benthic communities or other aquatic life." Appendix N of Poseidon's DEIR acknowledges discharged iron from DP 001 will "readily bind with the others elements in seawater and sediment." Coastkeeper and Surfrider have reasonable cause for concern over the accumulation of iron in sediments in and around DP 001 originating from a daily discharge of at least 1,831 pounds of iron that is known to bind with	See Response No. 67.

No.	Comment	Responses
	sediments. The Regional Board must responsibly consider the acknowledged discharge of iron from the desalination facility and determine whether it can reconcile those facts with the restrictions placed upon the discharge in the Tentative Order. Without additional information provided by Poseidon, we do not believe the Regional Board can responsibly conclude the discharge complies with the conditions of the Tentative Order.	
71(b).	Coastkeeper and Surfrider are concerned that Poseidon's waste discharge of at least 1,831 pounds of iron per day may contribute to more frequent HABs leading to hypoxic zones off the Huntington Beach coast as well as the accumulation of iron in sediments in the discharge zone. The Regional Board should strongly consider the impact of this acknowledged discharge from the proposed desalination plant and how the discharge can be reconciled with Sections V(A)(1)(c), IV(A)(5)(a) and (b)'s prohibitions on sediment degradation and aquatic growth inducing nutrient discharge before adopting the renewal of Tentative Order No. R8-2006-0034, NPDES No. CA80000403.	See Response No. 67.
November 27, 2011 letter from Surfrider Foundation – ADDENDUM: Waste Discharge Requirements for Poseidon Resources Huntington Beach Desalination Facility; Order No. R8-2011-0046; NPDES No. CA 8000403		
72(a).	Much of the analyses of "Alternative Intakes" discounts, if not ignores, the benefits of "subsurface intakes", by excluding documentation of the benefits of horizontal drilled wells and other methods for withdrawing "feed water" for operation of the Facility. For the record, we are submitting a study conducted by MWDOC in response to concerns that sub---surface intakes may cause harm to marine life. As you will see, the conclusions of that study are that sub---surface intakes dramatically reduce marine life mortality in comparison to other alternatives. We also believe that studies of operating subsurface intakes Such as the "infiltration galleries" currently operating at Fukuoka, Japan, would show similar benefits in reducing the Intake and mortality of marine life at an existing and operating ocean desalination facility.	This comment suggests that (a) the preliminary findings from the first phase of a multi-phase slant well intake pilot study of one small desalination facility in Dana Point, California, and/or (b) the relatively small facility located in Fukuoka, Japan (maximum intake volume is 103,000 m^3 per day, or approximately 27 MGD[1]), support the conclusion that, as a general matter, subsurface intakes represent the "best" available technology for minimizing the intake and mortality of marine life. The Regional Board disagrees. Although initial testing of small capacity slant wells near the mouth of San Juan Creek in Dana Point and/or operations at the Fukuoka facility may produce some encouraging results in terms of entrainment and impingement reduction potential, this comment provides no basis for concluding that subsurface intakes generally represent the "best" available technology for minimizing the intake and mortality of marine life, or that such technology is available or feasible with respect to the Facility. The Regional Board has determined that sub-seafloor intakes are not feasible, as explained in the site specific analysis of this technology. See Response Nos. 3(a), 20, 28, 36 and 37.

[1] *See* http://www.f-suiki.or.jp/english/seawater/outline.php.

No.	Comment	Responses
	Subsurface intakes appear to be the "best" available technology for minimizing the intake and mortality of marine life. This fact should be clearly and unambiguously stated in the Fact Sheet accompanying the Tentative Permit.	
72(b).	We also strongly recommend that the analysis include a review that integrates alternative sites, alternatives for different designed production capacity, as well as alternative intake technologies, that, as a whole, demonstrate conditions on permitting the design, construction and operation of the Facility in "stand alone" operation in a manner that is consistent with the Water Code mandates to minimize the intake and mortality of marine life.	See Response Nos. 3(a), 6 and 28.
October 18, 2011 letter from Environmental Stakeholder Coalition – RE: Waster Discharge Requirements		
73.	Pg. 8 Par. 1 - It is not clear in either the language of the permit or the SEIR what the incremental environmental impact would be on the energy demand or water quality when the desalination plant is operating in the reduced flow stand-alone mode. Is it accurate to assume that at least a part of the HBGS energy budget load would then be assumed by the desalination plant and the concentration of seawater contaminants in the waste discharge would be significantly increased?	It is somewhat unclear what Commenter means. The SEIR examined the energy consumption for both co-located and stand-alone operations. SEIR Section 4.12 and Appendix W. To the extent that the comment suggests that the Order must identify any incremental environmental impacts associated with the Facility's energy demand when operating in stand-alone mode, there does not appear to be any such legal requirement. The Order evaluates the water quality effects associated with the Facility's stand-alone operations and establishes that, when operating in temporary, stand-alone mode, the Facility is utilizing the best available site, design, technology, and mitigation measures feasible to minimize the intake and mortality of all forms of marine life in compliance with CWC Section 13142.5(b). See, e.g., Response No. 3(a).
74.	Pg. 9 Par. 2 – Is it true that when the plant is operating in the stand-alone mode at the reduced flow rate the concentration of contaminants contained in the discharge would be significantly greater than the seawater intake and would lead to further degradation of an already impaired water body?	When operating in temporary, stand-alone mode, the Facility's discharges will not degrade the receiving water body. See Response No. 79; see also the Fact Sheet, page F-21 ("discharges would not cause or contribute to adverse impacts on the beneficial uses of the receiving waters [and are] consistent with the antidegradation provisions of 40 CFR 131.12 and State Water Board Resolution 68-16.") Because the Facility's discharge will not contain enterococci, indicator bacteria, or PCBs (See Response No. 79), the Facility's operations will not contribute to any impairment of the nearshore and offshore zones of Huntington Beach State Park, which are on the CWA Section 303(d) list. Requirements in the Order meet or exceed all California Ocean Plan water quality requirements and ensure that the Facility's discharge will not degrade the receiving water body.
75.	Also is it true that at the reduced intake flow rate of 126.7	While the OTC Policy requires existing power plants to limit their through-

No.	Comment	Responses
	MGD the flow velocity at the seawater intake will be less than the 0.5 feet per second (fps) required for protection of marine life?	screen intake velocity to 0.5 fps, the Facility is not subject to the OTC Policy. See, e.g., Response No. 4. Although not applicable to the Facility, the OTC Policy identifies velocity caps as an example of a recommended technology that can be used to avoid impingement impacts and obtain compliance with the Policy. See OTC Policy Substitute Environmental Document at 100 (identifying studies that have evaluated the effectiveness of the HBGS's use of a velocity cap and concluding that this technology produces significant impingement reductions at the HBGS intake.) The HBGS's velocity cap will remain in place when the Facility operates in temporary, stand-alone mode, thereby minimizing impingement. The California Water Code does not impose a flow velocity requirement. Instead, CWC Section 13142.5(b) requires the Facility to utilize the best available site, design, technology and mitigation measures feasible to minimize the intake and mortality of marine life.
76.	Pg. 9 Par. 4 – Under these conditions the desalination plant discharger is the permittee and is responsible for the operation and compliance to the waste discharge permit requirements in this order. Since the discharge no longer serves as an OTC purpose for a power plant generating station but is an integral part of a new stand-alone desalination plant, should there be a requirement for a new complete and comprehensive EIR instead of the "Report of Discharge" as stated above?	The adoption of the Order is exempt from the provisions of CEQA pursuant to CWC Section 13389. As indicated in the Order, the City of Huntington Beach complied with CEQA requirements by certifying an SEIR for the Facility on September 7, 2010, which analyzed the Facility operating both in conjunction with and independently of the HBGS(i.e., in co-located and stand-alone mode).
77.	Pg. 10 Par. 6 / Attach F-13 Par. 4 / Pg. 11 Par. 2 – The statements appear to be predicated on the standard for review for CEQA. The CA Ocean Plan (COP) contains a more stringent definition of the term "significant" and there are several contaminants-of-concern that are discharged by the desalination plant into an already impaired 303d water body at concentrations that are "significant", i.e. arsenic, copper, mercury, silver, zinc, PCBs and indicator bacteria.	The Commenter is correct that the statements refer to the standard set forth under CEQA. Those portions of the Order summarize the Facility's compliance with CEQA, and the findings of the Facility's SEIR. However, the Order itself is exempt from CEQA review pursuant to CWC Section 13389. The statement cited by the Commenter on page 11, paragraph 2 refers to the Facility's compliance with the California Ocean Plan, not CEQA. The Commenter appears to be confusing the significant impact analysis under CEQA with the Project's compliance with the California Ocean Plan. In order to ensure compliance with the California Ocean Plan, the Order maintains the previously imposed limit for the Facility's total outfall discharge under co-located operations to a maximum of 44.7 percent of the intake flow (total desalination discharge 56.59 MGD/total HBGS discharge of 126.7 MGD). Under this requirement, the Facility could achieve its production capacity whenever HBGS flows meet or exceed 126.7 MGD. If the HBGS does not direct 126.7 MGD to the Facility, the Facility will operate the intake system in temporary stand-alone mode to maintain a minimum intake flow of approximately 126.7 MGD, thereby ensuring that the Facility's discharge

No.	Comment	Responses
		remains at or less than 44.7 percent of the total intake volume and complies with the California Ocean Plan.
78.	Attach A Par. A-5 – Is it accurate to state that when determining compliance to the waste discharge requirements the COP standard for significance as defined being the most stringent, should prevail?	For those provisions of the Order which require a determination of whether the Facility has complied with the California Ocean Plan, the Regional Board agrees that the definition of "significant" as set forth in Appendix I of the California Ocean Plan is the relevant standard, to the extent the California Ocean Plan's "significant difference" definition is applicable.
79.	Pg. 14 Par. 3 / Attach F-20 Par. 3 – The source water for the proposed desalination Plant are the waters offshore of Huntington Beach State Park. To date the source of these contaminants (enterococci, indicator bacteria and PCBs) are unknown, and TMDLs (total maximum daily loads) have yet to be determined. At low flow rates the concentration of these, as well as the other contaminants-of-concern included in Table B of the COP are doubled in the discharge of the effluent from the stand-alone desalination plant and then discharged into the near shore surf zone. This could pose a serious health hazard to recreational surfers and swimmers at the State Park. Has the water board conducted an antidegredation analysis and determined that continued discharge of increases concentration of these contaminants-of-concern at low flow rates is consistent with the Antidegredation Policy?	An antidegradation assessment found the discharges from the facility consistent with 40 CFR 131.12 and State Board Resolution 68-16 under both co-located and temporary stand-alone operating conditions. Order at 14 and F-19-20. This assessment was conducted even though an antidegradation analysis may not have been required. California's implementation of the state and federal antidegradation policies is summarized in a 1990 Administrative Procedures Update ("APU") from the State Board that was meant to "provide guidance for the Regional Boards for implementing State Board Resolution No. 68-16 . . . and the Federal Antidegradation Policy as set forth in 40 CFR 131.12." *Administrative Procedure Update* 90-04, (July 1, 1990) (hereinafter "APU 90-04") at 1. APU 90-04 implements the state and federal antidegradation policies and instructs Regional Boards with respect to: (1) when an antidegradation analysis is required; (2) whether a so-called "simple" or "complete" analysis is required; and (3) the procedure for performing a complete antidegradation analysis. Regional Boards implement the antidegradation policy "when issuing, reissuing, amending, or revising an NPDES permit." APU 90-04 at 1. Where a Regional Board "has no reason to believe that existing water quality will be reduced due to the proposed action, no antidegradation analysis is required." APU 90-04 at 2. Here, while the Regional Board explicitly determined that the existing water quality would not be lowered by the proposed action, it still made determinations regarding antidegradation. See the Fact Sheet, page F-21 ("Mass emission and concentration limits established in this Order are at least as stringent as those established in the previous order, and would not result in a lowering of water quality."). APU 90-04 provides that a so-called "simple" antidegradation analysis is appropriate when any of the following determinations are made based on information available to the Regional Board and any other background material the Regional Board believes is necessary:

No.	Comment	Responses
		a. The Regional Board determines that the reduction of water quality will be spatially localized or limited with respect to the waterbody; e.g., confined to the mixing zone; b. The Regional Board determines the reduction in water quality is temporally limited and will not result in any long-term deleterious effects on water quality; c. The Regional Board determines the proposed action will produce minor effects which will not result in a significant reduction of water quality; or d. The Regional Board determines that the proposed activity has been approved by the General Plan of a political subdivision and has been adequately subjected to the environmental and economic analyses in an environmental impact report (EIR) required under CEQA. APU 90-04 at 2. As indicated in APU 90-04, if the Regional Board makes any one of these determinations, a so-called "simple" antidegradation analysis is appropriate. APU 90-04 at 2. While only one of these determinations is required for a "simple" antidegradation analysis, at least three of them have been satisfied in this Order: a. Order at F-20 (providing that while there may be a slight increase in salinity concentrations, "this change would be spatially localized and confined to the mixing zone"); b. *Id*. (providing that "the discharges would not cause or contribute to adverse impacts on the beneficial uses of the receiving waters"); c. *Id*. at F-13 (noting that the proposed action was subject to an EIR as required by CEQA and is consistent with the City of Huntington Beach's General Plan as demonstrated by Huntington Beach's approval of the EIR and permits for the project). When the Regional Board determines that a "complete" antidegradation analysis is not warranted because it is able to make one of the determinations

No.	Comment	Responses
		of a "simple" antidegradation analysis, the Regional Board must state the basis for its finding. APU 90-04 at 3. Here, the Order identifies the basis for the Regional Board's antidegradation analysis. *See* the Fact Sheet, page F-21 As discussed in Appendix Q of the SEIR, multiple studies have demonstrated that the HBGS is neither the source of, nor a significant contributor to, the bacterial contamination in the nearshore ocean environment proximate to the HBGS. See SEIR, Appendix Q at pages Q-6-8 (citing Komex (AES Huntington Beach Generating Station Surf Zone Water Quality Study, Final Draft (2003)), MBC (2002) and USGS (2001) in support of a finding that the cooling water intake and discharge associated with the HBGS is neither the source of, nor a significant contributor to, the bacterial contamination in the nearshore ocean environment proximate to the HBGS.)
80.	Pg. F-43 Par. 1 – Although not specifically stated in the Waste Discharge Requirements does the Discharge Flow Limitation implies a mandated salinity concentration limit at the point of discharge of 49.9 ppt? Does the COP salinity concentration limit of 37.4 ppt at the 1000 ft. distance from the plant outflow still apply? (not more than 10% normal).	When operating in stand-alone mode, the Facility's intake flows will be maintained at approximately 126.7 MGD, and the salinity concentration at the point of discharge will be approximately 55.4 ppt. SEIR, Appendix K (Hydrodynamic Modeling Report, Jenkins & Wasyl (2010)), Table 2 at p. 118. The California Ocean Plan does not require a salinity concentration limit of 37.4 ppt (or 10% above ambient).
November 22, 2011 Letter from HB Resident David E. Hamilton RE: Order No. R8-2011-0046, NPDES No. CA80000403		
81(a).	The environmental effects of dumping 7,000 tons of salt concentrates per day produced by the Poseidon facility back into Huntington Beach's coastal waters can only be guessed at. The only assurance of such guesswork is that coastal water quality will not improve as a result. In fact, the Poseidon EIR states on page 18 of the Executive Summary: "OCEAN WATER QUALITY: The proposed project may adversely impact ocean water quality in the vicinity of the HBGS outfall. Significance: Less than significant." The Board should be amazed that anyone could possibly claim that dumping 7,000 tons per day of anything into our coastal waters would be "Less than significant"! That's not 7,000 tons of brine being referenced. It's the actual 14,000,000 pounds (!) of light and heavy metal salts which gets dissolved into a brine mixture for transport and disposal in our near coastal waters every day. That's nearly 5 tons per minute of every minute of every hour of every day for the operational life of the proposed facility.	The Facility discharge will return water quality constituents that were received from the seawater back to the ocean. Concentrated seawater ("salt concentrates") is not a contaminant and it is not regulated as a toxic compound. The discharges permitted by this Order meet or exceed all California Ocean Plan water quality requirements with respect to salinity. The Order contains no changes in the effluent limitations or mass emission limits established in the Facility's existing Order No. R8-2006-0034. Note the final paragraph of Finding B of the Order (page 8), which states: "To ensure protection of receiving water beneficial uses and to limit salinity concentrations in receiving waters, Order No. R8-2006-0034 limited the Facility's total outfall discharge under the co-located operations to a maximum of 44.7 percent of the intake flow (total desalination discharge 56.59 MGD/total HBGS discharge of 126.7 MGD). Under this requirement, the Facility could achieve its production capacity whenever HBGS flows meet or exceed 126.7 MGD. If the HBGS does not direct 126.7 MGD to the Facility, the Facility will operate the intake system in a temporary stand-alone mode to maintain a minimum intake flow of approximately 126.7 MGD, thereby ensuring that the Facility's discharge remains at or less than

No.	Comment	Responses
		44.7 percent of the total intake volume." To the extent the comment challenges the validity of the conclusions in the certified SEIR, the comment is not applicable to the consideration of the Order and no response therefore is required.
81(b).	At a time when our civic leaders and responsible agencies should be making all possible decisions to improve the quality of our coastal waters, the Board is to decide on an issue that, according to the requestor's own documents, " ... may adversely impact ocean water quality ... ".	Comment noted.
81(c).	Furthermore, there are uncertainties about the adverse effects on ocean wildlife via the HBGS/Poseidon intakes[.]	The comment does not specify any "uncertainties" regarding "adverse effects on ocean wildlife" that would provide a basis for the Regional Board to respond to the comment. To the extent the comment contends that the Facility will not comply with CWC Section 13142.5(b), please see Response No. 3(a).
82.	Impacts of brine odors on residential air quality.	The Regional Board is unaware of any potential impacts on residential air quality that could result from brine odors. Furthermore, the Regional Board has fully complied with all requirements of CWC section 13142.5(b).
83.	Constant noise produced by pressurizing, pumping and moving around 200,000 tons of water per day?	See Response No. 82.
84.	Combine those with the uncertainty about the technology to produce the proposed quantity of potable water, especially considering the debacle of Poseidon's Tampa, Florida effort.	See Response No. 82.
85.	Then, there's the economic uncertainty of whether it's wise to build reliance on private, profitized sources for what is an essential for life.	Comment noted. Please see Response No. 82.
86.	Finally, there's the uncertainty of the long-term viability of Poseidon Resources as a company, particularly considering that, as of October 31, 2011, according to the Municipal Water District of Orange County (MWDOC), Poseidon Resources has no agreement with any public agency to acquire the water the facility produces.	See Response Nos. 11 and 82.
87(a).	Please note, in other parts of the world, just a 1 oc increase in coastal water temperatures has destroyed thousands of square miles of the world's coral reefs. A 3% increase in coastal water acidity has claimed additional thousands of square miles of coral reef and marine habitat. Poseidon facility's dumping of salt by-product will increase water salinity in Huntington Beach's surf zone between 5% and 20% depending on depth, water temperature, and proximity to the discharge point. This increased salinity will exist continuously for the projected 30-year life of the desalting plant. During the typical mid-summer, long-shore currents	See Response No. 81(a).

No.	Comment	Responses
	can carry Poseidon's meta- and hyper-saline effluent plume onshore toward protected State Beaches.	
87(b).	How will the increase in salinity affect the coastal waters? Depends on which biologists the Board believes-Poseidon's paid biologists or the self-financed marine biologists of environmental organizations and academia. One thing is assured: The health of local coastal water will be adversely affected to some degree! Can the Board take the chance that the local coastal waters will not be adversely impacted?	See Response No. 81(a).
December 4, 2011 Letter from Residents for Responsible Desal, Desal Response Group, Coastal Environmental Rights Foundation RE: Waste Discharge Requirements for Poseidon Resources Huntington Beach Desalination Facility; Order No. R8-2011-0046; NPDES No. CA 8000403		
88.	Changed circumstances since the Board's initial approval of the 2006 permit for the Huntington Beach Generating Station (HBGS), including the adoption of new state policy by the State Water Resources Control Board that restricts the use of seawater for cooling power plants, including the HBGS, are substantial and demand an exhaustive review of alternatives to the Facility proposed at that time. Unfortunately, the analysis and draft tentative Order do not require any changes in the Applicant's plans in response to this significant change in State policy on the use of seawater for an industrial use – a change that directly affects the future use of the infrastructure on which their design depends.	To the extent that the comment is referring to the OTC Policy adopted by the SWRCB, the OTC Policy does not apply to the Facility. To the extent the OTC Policy affects the HBGS, and the availably of used cooling water as the feedstock to the Facility, those effects would be considered when/if the Regional Board considers long-term, stand-alone operations at the Facility. See also Response Nos. 2 and 4.
89.	The proposed re-issuance fails to acknowledge that the SWRCB is currently crafting policy that will specifically address the operation of seawater desalination facilities.	The Order contemplates potential new policies, or changes in existing policies. The Order provides that "[t]his Order may be reopened to address any changes in State or federal adopted rules, policies or regulations that would affect the quality requirements for the discharges." Order, Section C(1)(a) ("Reopener provisions").
90.	The RWQCB should not be approving a permit that is likely to conflict with future state policy on the operation of seawater desalination facilities.	We are unaware of any regulatory or policy proposal with which the terms of the Order are in conflict. See also Responses No. 1 and 89.
91.	The site, design and technology proposed in the Tentative Order violates the intent and the letter of Water Code section 13142.5(b) and undermines the intent of the recently adopted "Statewide Water Quality Control Policy On The Use Of Coastal And Estuarine Waters For Power Plant Cooling" (OTC Policy).	The Order does not violate the intent or letter of CWC Section 13142.5(b). See Response No. 3(a). The Order does not undermine the intent of the OTC Policy. See Response No. 2.
92.	Since the Regional Board's approval of NPDES No. CA0001163 (HBGS discharge), and the concurrent approval	The OTC Policy does not apply to desalination facilities. See Response Nos. 2 and 4.

No.	Comment	Responses
	of NPDES No. CA8000403 [Poseidon Seawater Desalination discharge], the State Water Resources Control Board adopted the OTC Policy. Therefore, the Regional Board should be considering this re-issuance as if it is an entirely new project proposal.	
93.	The recent adoption of the OTC Policy has eliminated the basis for approving the 2006 NPDES permit – that basis being that the Facility should co-locate with the HBGS to utilize the existing discharge for the Facility's source water. Now, the withdrawal of seawater for the Facility during its lifetime of operation will be a "new" withdrawal and consequently demands an immediate and thorough analysis for compliance with the Water Code.	The OTC Policy does not eliminate the basis for co-located operations, as it does not require the immediate shutdown of once-through cooling. The Regional Board has engaged in a thorough analysis of compliance with CWC Section 13142.5(b) and has found the Facility will use the best available site, design, technology and mitigation measures feasible to minimize the intake and mortality of marine life, consistent with CWC Section 13142.5(b). See Response No. 3(a).
94.	The assumptions and rationale for co-location in the 2006 NPDES permit are no longer applicable since the State Board adopted statewide policy to phase out the use of once-through cooling. The enforcement of that new policy is particularly relevant in the case of HBGS.	The OTC Policy does not apply to desalination facilities. See Response Nos. 2 and 4. Long-term, stand-alone operations will be considered at an appropriate time in the future.
94(a).	Since adoption of the OTC Policy, the owner/operator of HBGS has submitted a "compliance plan" to the State Board indicating that they intend to dismantle the existing generators and replace them with a newer design that will employ closed-cycle "air cooling" – eliminating the need to withdraw and discharge seawater. The entire rationale in the 2006 NPDES permit for the site, design and lack of additional technological devices to minimize the intake and mortality of marine life, as mandated in the Water Code, has been eliminated with the adoption of the new OTC Policy.	On April 1, 2011, AES Huntington Beach submitted to the SWRCB a plan for compliance with the OTC Policy. Based on AES's implementation plan, the HBGS cooling water system is anticipated to be in operation until at least December 31, 2020. The OTC Policy does not apply to desalination facilities. See Response Nos. 2 and 4.
95.	The OTC Policy clearly mandates HBGS to immediately cease withdrawing seawater unless the power plant is generating electricity or for specific emergency needs. This requirement will dramatically reduce the average annual withdrawals cited in the Fact Sheet for the proposed reissued NPDES permit currently before the Regional Board.	See Response Nos. 4 and 94(a). In the event that HBGS permanently ceases use of the once-through cooling water system or permanently ceases electricity generating operations at the current site, the Discharger is required to submit a separate Report of Waste Discharge within 180 days which evaluates any new design, technology and mitigation requirements that may be feasible to conform with Water Code Section 13142.5(b).
96.	It is our understanding that AES has sold the two newer and more efficient generators at HBGS to Mission Edison, and those two generators will be taken out of operation in the near future. HBGS is not a "base load" power plant and mostly operates during load demands that drive electricity prices high enough for the newer and/or older generators to	Between 2006 and 2010, the HBGS's annual average seawater intake flow through the power plant ranged from 200 MGD to 268 MGD. The power plant's maximum daily intake flow reached 507 MGD in each year. Based on this information, it does not appear that this is "sporadic" energy production. As noted elsewhere, it is difficult to predict how often and to what extent HBGS

No.	Comment	Responses
	produce electricity at a competitive price. This results in sporadic operation of the power plant. And it is reasonable assume that, when the newer existing generators are taken out of commission, the power plant will operate even less frequently – again, reducing the average annual withdrawal of seawater cited in the Fact Sheet.	will operate in the future. Please note that the planned intake for the facility, at 126.7 MGD, is substantially less than the average intake for years 2006 and 2010 for the HBGS facility. . See also Response No. 95.
97.	The analysis in the current tentative Order of the volume of water that will likely be available for "source water" during the so-called "temporary stand-alone operation" is based on historical records prior to adoption of the OTC Policy and the sale of two of the HBGS generators. This is now irrelevant information given the new mandate in the OTC Policy to discontinue seawater withdrawals when the plant is not generating electricity. It is reasonably foreseeable that the HBGS intake and discharge volume will be dramatically less than what is assumed in the tentative Order Fact Sheet.	See Responses No. 94(a), 95 and 96.
98.	The State Board is currently developing statewide policy for guidance on the enforcement of the Water Code for the development of seawater desalination. Given that the Water Code does not distinguish the use of seawater for "cooling, heating or other industrial processes", it is reasonably foreseeable the adopted policy will be as protective, if not more protective, in achieving the overriding goal to "minimize the intake and mortality of marine life" that was recently adopted in the OTC Policy – including the conclusion that existing open ocean intakes are not the best technology available.	See Responses No. 1, 89 and 90.
99.	The analysis lacks a proposed methodology for integrating the components of Water Code section 13142.5(b) to ensure the overriding mandate to "minimize the intake and mortality of marine life."	A thorough analysis of compliance with CWC Section 13142.5(b) has been performed, which shows that the Facility will use the best available site, design, technology and mitigation measures feasible to minimize the intake and mortality of marine life, consistent with CWC Section 13142.5(b). See e.g. Response No. 3(a).
100.	A new and thorough analysis of alternatives for a seawater desalination facility, and strict compliance with the mandates of the Water Code, is necessary given the changes in circumstances brought about by enforcement of the OTC Policy – in particular the plans by HBGS to permanently cease their withdrawal of seawater.	Alternative sites for the Facility within the City of Huntington Beach and elsewhere in Orange County have been considered and found to be infeasible. See e.g. Response No. 3(a). The Discharger also conducted a thorough review of alternative seawater intakes, alternative screening technologies, and alternative desalination technologies that could potentially minimize marine life intake and mortality. See SEIR and 2011 Water Global Consulting Evaluation of Alternative Desalination Plant Subsurface Technologies. As reflected in the Fact Sheet on pages F-29 and F-30, taking into account economic, environmental and

No.	Comment	Responses
		technological factors, these modifications to the existing intake system have been shown to be not feasible. See Response No. 3(a). We have reviewed the Facility and conclude that it complies with CWC Section 13142.5(b) during temporary stand-alone and co-located operations. See Response Nos. 3(a), 15(a), 16(a) and 16(b).
100(a).	The phased approach for "temporary stand alone operation" and a subsequent "permanent stand-alone operation" -- that is recommended in the Tentative Order -- is fatally flawed and must be denied.	We have reviewed the Facility and conclude that it complies with CWC Section 13142.5(b) during temporary stand-alone and co-located operations. See Response Nos. 3(a), 15(a), 16(a) and 16(b). In the event that HBGS permanently ceases use of the once-through cooling water system or permanently ceases electricity generating operations at the current site, the Discharger is required to submit a separate Report of Waste Discharge within 180 days which evaluates any new design and technology requirements that may be feasible to conform with CWC Section 13142.5(b).
101.	Any withdrawal of seawater above what is being discharged from HBGS is a "new" seawater withdrawal for industrial uses, and consequently regulated by Water Code Section 13142.5(b). In complying with the Water Code mandates, there is no rational distinction between withdrawing this new water above the volume currently discharged by HBGS on a "temporary basis" compared to withdrawing the total volume on a "permanent basis" once the HBGS discontinues withdrawing seawater. They are both "new" withdrawals for a "new industrial installation."	See Response No. 12.
102.	The Tentative Order appears to postpone a full analysis of compliance with the mandates of the Water Code until after the HBGS has discontinued use of the cooling water intake. This would allow construction on the HBGS site prior to a full analysis of compliance with the Water Code. This is unacceptable. a thorough analysis of compliance with the Water Code requires comparing alternatives for the best "technology" to minimize the intake and mortality of marine life, a "site" that is compatible with that technology, and finally a Facility "design" that is based on the production capacity allowed by the best technology and site feasible, and the associated intake volumes for "source water." This is the most reasonable method for analysis and enforcement of the Water Code if the Regional Board wants to ensure that the overriding mandate to minimize the intake of marine life is achieved.	The Order does not postpone a full analysis of compliance with CWC Section 13142.5(b). In conjunction with the Order, we have reviewed the Facility and concluded that it complies with CWC Section 13142.5(b) during temporary stand-alone and co-located operations. See Response Nos. 3(a), 15(a), 16(a) and 16(b). In the event that HBGS permanently ceases use of the once-through cooling water system or permanently ceases electricity generating operations at the current site, the Order requires the Discharger to submit a separate Report of Waste Discharge within 180 days which evaluates any new design and technology requirements that may be feasible to conform with CWC Section 13142.5(b).

No.	Comment	Responses
103.	The mandates of the Water Code must be analyzed as a whole, not as distinct parts unrelated to each other and not segmented in a way that does not ensure the greatest minimization of marine life intake and mortality. The Tentative Order, and the incorporated Fact Sheet and other attachments, do not describe the methodology for the analyses and consequently fail to reach a result that actually "minimizes the intake and mortality of marine life."	See Response No. 32.
104.	We assert that one way to analyze the mandates of the Water Code to ensure actual minimization of the intake and mortality of marine life would be: 1. The "best" technology for minimizing the intake of marine life must be determined through a comparison of all available alternatives; 2. The "best" site must be identified in consideration of its compatibility with the "best" technology to minimize the intake and mortality of marine life. 3. The "best" design must then be determined by the volume of water available from the best available site that is compatible with the best available technology.	See Response No. 32.
105.	The analyses and conditions in the Tentative Order appear to be based on the assumption that the Facility must produce 50 million gallons of potable water a day (MGD). However, there is no evidence that substantiates this baseline assumption. For example, there are, as of yet, no Water Purchase Agreements to purchase the Facility's produced water.	See Response No. 11.
106.	While it is not included in the analyses, there is an incentive program provided through Metropolitan Water District (MWD) with an expressed goal of producing a limited volume of potable water from ocean desalination regionwide. However, it does not require a 50 MGD Facility at this site. The MWD rebate program and the associated limited development of ocean desalination, even if it were a mandatory component of their supply portfolio, can be feasibly met through other desalination proposals in the region that are consistent with full enforcement of the Water Code's mandates.	Comment noted. Production of 50 MGD per day of desalinated product water is necessary to meet the objectives of the Project. Specifically, the objectives of the Facility are to provide a local and reliable source of potable water to supplement imported water supplies available to the City of Huntington Beach and the Orange County region, reduce local dependence on imported water, and help meet the Facility's planned contribution of desalinated water to regional water supply goals. The Facility will supply Orange County with up to 8% of its drinking water needs. See Response Nos. 11 and 20.
107.	A smaller production capacity design is both feasible and allows for a proposal employing a superior site, design AND technology – taken as a whole – to minimize the intake and	We disagree that a smaller production capacity can feasibly obtain project objectives. See Response No. 6. The Facility will comply with CWC Section 13142.5(b) requirements when producing 50 MGD of desalinated water. See,

No.	Comment	Responses
	mortality of marine life.	e.g., Response No. 3(a).
108.	The pre-determined design capacity of 50 MGD limits a full analysis of alternative and superior sites and technologies that are consistent with the law.	We disagree that the Facility's 50 MGD capacity has limited analysis of the Facility's compliance with CWC Section 13142.5(b)'s site or technology requirements. The Facility has been assessed for CWC Section 13142.5(b) compliance and it has been determined that it satisfies the statutory requirements in co-located and temporary stand-alone mode. See, e.g., Response No. 3(a).
109.	Postponing a thorough analysis of alternatives for compliance with the elements in the Water Code for minimizing the intake and mortality of marine life until after the Facility is constructed on the HBGS site prematurely enshrines the HBGS site as the "best" available.	If the HBGS permanently ceases operation of the once-through cooling water system and/or if the HBGS permanently stops generating electricity at the current site, within 180 days of receiving such notice, the Discharger shall submit a separate Report of Waste Discharge to the Regional Water Board. The Regional Board will evaluate long-term stand-alone operation of the Facility for compliance with CWC Section 13142.5(b) at that time. See also Response No. 102.
110.	As has been the experience with the Carlsbad project, once the Regional Board gives its stamp of approval for the desalination use, Poseidon then uses that approval to argue for relaxation of phaseout requirements for the once through cooling infrastructure of the power plant. This was never the intent of the OTC policy, and it certainly is not consistent with the framework contemplated by Porter-Cologne.	The OTC Policy is not applicable to the Facility. See Response Nos. 2 and 4. The Commenter has not provided any specific sections of Porter-Cologne that can facilitate a response.
111.	The Fact Sheet and other attachments regarding the discharge and dilution of the brine waste are void of any analysis of alternative discharge technologies that avoid the necessity to withdraw approximately 25% more seawater than is necessary for "source water." The additional volume of water withdrawn, and associated intake and mortality or marine life, is only for the purpose of meeting the dilution factor and other requirements in the Ocean Plan. Obviously, this additional withdrawal of seawater for what may be referred to as "in-plant dilution" would unnecessarily increase the intake and mortality of marine life, in violation of Water Code section 13142.5(b).	See Response Nos. 5 and 61.
112.	The language in the Ocean Plan suggests that the dilution occur between the "edge of the outfall structure" and the edge of the zone of initial dilution (ZID), or 10% of the ZID for acute toxicity. Obviously, "in-plant dilution" would be inconsistent with that language because the dilution would not occur outside the edge of the outfall structure.	See Response No. 61.

No.	Comment	Responses
113.	While the Fact Sheet and other attachments have done a cursory attempt at segregating the several streams of discharges (e.g., pre-treatment waste materials, filter cleansing and backwash materials, RO membrane concentrate, etc), the analysis has not adequately identified a suite of alternative disposal technologies and/or practices that would be best suited for the constituents in the segregated wastewater streams. A thorough analysis must list all potential disposal alternatives and match the best alternative to the potential adverse impacts from the constituents in the separate waste streams.	See Response Nos. 5 and 61.
114.	The permit must be denied until alternative technologies for waste disposal, and/or discharge dilution technologies that do not require additional seawater withdrawals, are fully documented and incorporated into the permit requirements. Further, there are superior "real time" monitoring technologies that should be evaluated and potentially mandated as a requirement in the permit.	See Response Nos. 5, 61 and 66.
115.	"After the fact" restoration in lieu of the best site, design, and technology is prohibited. Federal law, articulated in *Riverkeeper* I (new facilities withdrawing cooling water over 50 MGD), and re-stated in *Riverkeeper* II (existing facilities withdrawing 50 MGD or more) make perfectly clear that "after the fact" restoration is illegal as a substitute for minimizing adverse environmental impacts in the first place. These federal decisions were specifically addressing US EPA's draft regulations to enforce Clean Water Act Section 316(b). Nonetheless, the reasoning in the federal court opinions is instructive for interpreting California's Water Code.	See Response No. 15(a).
116.	The California equivalent of the federal Clean Water Act is the Porter-Cologne Act, which has been enacted in the Water Code section 13142.5(b). So the federal court ruling in *Riverkeeper* II, and the reasoning for the decision prohibiting "after the fact" restoration is relevant and binding on interpretation and enforcement of the Water Code.	See Response No. 15(a).
117.	The Water Code regulates withdrawals of seawater for cooling purposes, but expands the limited scope of the "technology forcing" policy in several distinct ways. First, the California Water Code is not limited to compelling the use of best technology available for cooling water intakes:	We agree that CWC Section 13142.5(b) applies to desalination plants. We disagree that wetlands restoration is prohibited as a form of the mitigation contemplated by CWC Section 13142.5(b). See Response No. 16(b). The OTC Policy is not applicable to the Facility. See Response Nos. 2 and 4.

No.	Comment	Responses
	the California Water Code expands those mandates and inherent protections of marine ecosystems to cover any withdrawal of seawater for industrial purposes. Withdrawals of seawater for ocean desalination would obviously be included. The Water Code makes no distinction between the regulation and protection of marine ecosystems from cooling water intakes or other industrial withdrawals of seawater. Therefore, any prohibitions on "after the fact restoration" would be equally applicable to cooling water intakes as it would be to other seawater withdrawals. This prohibition has already been included in the OTC Policy in provisions clearly restricting reliance on restoration projects on an interim basis until existing power plants come into compliance with the technology mandates in the Policy.	
118.	The Water Code differs from the Clean Water Act in that it expands the scope of the elements to be considered when achieving the underlying intent of the law to "minimize the intake and mortality of marine life." While the Clean Water Act narrowly mandates best technology available for the intake, the Water Code expands this mandate to cover the "site" and "design" of the Facility.	We agree that CWA Section 316(b) and CWC Section 13142.5(b) are different. See Response 15(a). We also agree that CWC Section 13142.5(b) mandates, "the best available site, design, technology, and mitigation measures feasible . . . to minimize the intake and mortality of all forms of marine life". The Facility, as proposed, will comply with CWC Section 13142.5(b).
119.	The Water Code includes "mitigation" measures to minimize the intake and mortality of marine life. There is some debate whether "mitigation" may be interpreted to include "after the fact restoration." However, a clear read of the language indicates that, however the Regional Board may interpret the term, it would have to be consistent with the operative language to minimize the "intake and mortality of marine life." (emphasis added). By definition, "after the fact restoration" does nothing to mitigate the intake of marine life.	See Response 16(b).
120.	The tentative Order relies exclusively on a restoration project that was mandated by the California Energy Commission in a conditional emergency permit to upgrade two of the existing generators at HBGS as "mitigation" for the admitted intake and mortality of marine life caused by the operation of the "new" Facility. This condition on the CEC license of the HBGS would clearly be illegal today under the law established in *"Riverkeeper II"*. This is also verified and codified in the State Water Board's OTC Policy.	To the extent the comment suggests that federal court decisions require retroactive invalidation of the CEC's permitting of the HBGS, the comment is not applicable to this proceeding and no response therefore is required. See Response Nos. 58(c) and 60. The OTC Policy is not applicable to the Facility. See Response Nos. 2 and 4.
121.	The tentative Order must be denied as written, with instructions to the staff to delete any inclusion of "after the	See Response 16(b).

No.	Comment	Responses
	fact restoration" as a means of complying with the mandates of the Water Code section 13142.5(b). After the fact restoration would only be an attempt to "replace" the loss of marine life, and consequently would not minimize the intake at all.	
122.	The analysis in the tentative Order, Fact Sheet and other supporting documents fails to document and consider State policy mandating a preference for the use of recycled water, as expressed in Water Code Section 13142.5(e) (1).	By co-locating with the HBGS, the Facility will use the wastewater stream discharged by the HBGS as its first source of water. The Discharger's proposed beneficial reuse of the HBGS's discharge is a form of conservation of water resources through recycling expressly encouraged by the State of California. Consistent with CWC Section 13142.5(e), the Facility will recycle that waste for beneficial use to supplement existing surface and underground supplies in Orange County to assist in meeting future water supply requirements. This is consistent with CWC Section 13050(n)'s definition of recycled water as "water, which as a result of treatment of waste, is suitable for direct beneficial use that would not otherwise occur, and is therefore considered a valuable resource." See also Response No. 2.
123.	Orange County Sanitation District, in cooperation with Orange County Water District, is already producing recycled water through their "Groundwater Replenishment System" (GWRS), and there are current plans to marginally expand that production capacity. However, the GWRS, over time, can and should be expanded for even greater production. This is relevant to the analysis in the tentative Order because the expanded production of recycled water in the region would offset the pre-determined, yet unsubstantiated, assumed need for a 50 MGD seawater desalination Facility.	The comment is speculative as to any future expansion of the GWRS or the amount of potable water that such an expansion might at some time provide. Furthermore, it is unclear exactly how the Regional Board could respond to a request for an NPDES permit by citing to a project that might provide a somewhat similar product. The Regional Board does not have the authority to evaluate that kind of variable when issuing an NPDES permit. See Response Nos. 11, 20 and 106. The need for a reliable new local water supply in Orange County is great and desalination provides such a supply, as recognized by the California Department of Water Resources, Metropolitan Water District and the Municipal Water District of Orange County. SEIR, Section 3.5.
124.	The Fact Sheet asserts that there are several potential adverse impacts from the use of subsurface intakes on coastal wetlands and aquifers in the immediate area. For example, the Fact Sheet uses terms such as "the potential" long term effects of dewatering local marshes, "possible interception" of contaminated groundwater, "possible interception" of injection water for the seawater barrier, "potential subsidence" of roads and structures. These assertions appear to be speculative. But even accepting them as proven factual threats to the environment, which we do not, the analysis fails to identify methods to mitigate	See Response Nos. 41 and 123.

No.	Comment	Responses
	these asserted adverse impacts. In particular, there is no analysis of the benefits of expanding the GWRS to ensure against these asserted impacts.	

RESPONSES TO ORAL COMMENTS RECEIVED AT THE REGIONAL BOARD'S DECEMBER 9, 2011 HEARING

No.	Comment	Responses
ORAL COMMENTS		
Surfrider Foundation (Joe Geever)		
1.	"[A]ll the elements in that water code need to be taken as a holistic piece not segregated out into pieces of site, design, technology, mitigation, whatever. That's a comprehensive package, and so if you decide what the best intake technology is for minimizing marine life, then you would you know decide which site is consistent with that technology and what design capacity for the facility is consistent with the site and technology."	As drafted, the Order effectively and comprehensively addresses the elements set forth in Section 13142.5(b) of the California Water Code. See Response Nos. 3(a), 20 and 28. To the extent that this comment suggests that CWC Section 13142.5(b) requires the Regional Board to conduct this analysis by first identifying what is "the best intake technology for minimizing marine life," and then resolving the other factors in light of this initial finding, we disagree. The statute does not specify a hierarchy among the various factors, nor does it mandate the sequential approach suggested by the comment.
2.	"[T]hat case in San Diego is going to appeal. That trial decision is not law."	Commenter is apparently referencing Surfrider's appeal of Superior Court Judge Judith F. Hayes' ruling upholding the San Diego Regional Water Quality Control Board's approval of the Carlsbad Desalination Project's NPDES permit. *Surfrider Foundation v. California Regional Water Quality Control Board, San Diego Region, et al.*, Case No. 37-2010-00090436-CU-WM-CTL, Tentative Statement of Decision. It is appropriate for the Regional Board to include Judge Hayes' decision in the record for this matter. Comment noted that Surfrider has appealed Judge Hayes' decision, and that appeal is pending.
3.	"[O]ur interpretation is that the operative terms in that water code section are minimizing the intake and mortality of marine life and what the staff report and counsel or anybody else has failed to analyze or explain to us is how after the fact restoration mitigates the intake of marine life. It by definition does not minimize the intake of marine life. It accepts the intake and mortality of marine life and tries to replace it. That's been found illegal by the federal courts for cooling water intakes. By the way, the water code doesn't	The mitigation called for in the Order is not "after the fact." See Response No. 10(a).

No.	Comment	Responses
	distinguish between cooling water intakes and any other industrial intake. They're all treated the same. If it's illegal for cooling water intake, it's illegal for any intake."	
4.	The OTC policy is relevant to this consideration. "The OTC policy has provisions in it that mandate the generator to quit withdrawing water when they're not generating electricity."	See Response No. 4.
5.	"Those [flow] numbers that are in the staff report that cite how much water [AES has] been withdrawing over the past five years includes water that was withdrawn when they weren't generating. They can no longer do that after next year. Those numbers are irrelevant. You can't predict that there will be a discharge from the generator in volumes large enough to supply this facility. Most of the year that's not going to be true.	See Response Nos. 94(a), 95, 96, and 97.
6.	"[I]t should be clear that a re-opener would re-open consideration of all the elements of the water code – not just whether the mitigation is feasible or not. It would have to look at a new site, new technology and everything. That's what a re-opener is. So, if the re-opener doesn't include looking at all the elements in the water code what you've actually done by permitting this thing even if it were just for co-location operation, is you've enshrined that site…. The re-opener should be explicit about what's going to be considered and it should be everything in the water code is going to be reconsidered."	See Response No. 7.
7.	The in-plant dilution thing – you can look through our attachments and our argument, and I think what you'll find is that there are different technologies. What's there now is just an open pipe that they're going to discharge out of, and if you do that, then they're right. To make the dilution factor, you're going to have to withdraw additional seawater to mix it before you discharge it. That's going to cause additional marine life intake and mortality.	See Response Nos. 3(a), 5, and 61.
8.	What we've given you is papers that show different technologies that can mix the brine without the need for withdrawing additional seawater. If you go back to the water code, it says use the best technology for minimizing the intake and mortality of marine life. Open ocean discharges are not it. There are diffusors, several different ways that you can dilute that brine without withdrawing more seawater. So you can take that 26.7 million right off the table when you do the analysis of whether these sub-sea floor intakes are	See Response Nos. 3(a), 5, and 61.

No.	Comment	Responses
	feasible or not. You don't need to withdraw that 26.7 million gallons. If fact, you're not allowed to.	

Orange County Coastkeeper – Ray Heimstra		
9.	The Facility's proposed iron discharges " could have a big impact on our water quality….[The EIR says that] the project was planning on putting about 1,800 pounds – almost one ton of iron into the ocean every day. That's a huge amount of iron. One of the things that iron does is it can affect plankton bloom…. We really don't know what effect the addition of iron is going to have to our water whether risk plankton blooms."	See Response No. 67.
10.	"Now with this new method of I don't know whether they're going to put in this giant tank, we're talking about treating six million gallons a day of flocculated iron. So you know that tank was not on the map. So anyway, I don't know how we're going to treat that, but the bottom line is even the distil let that's going to be put back into the pipe is still going to have residual iron. We don't know that the level of that iron is going to be."	The current design and site layout contemplates a solids treatment and removal process that will remove added iron, if a media filtration treatment process is employed. This process will operate on a continuous basis, obviating the need for a large storage tank. The water recovered from this process will be returned to the head of the Facility and reused. The solids removal process will consist of a storage tank, pumps, clarifiers or thickeners, and sludge dewatering technology, which will be located in the pretreatment and solids handling buildings. The solids removed from the backwash of the media filtration process will be hauled to landfill via truck. The volume of iron discharged to the ocean for either the media pretreatment and solids handling process or the membrane pretreatment process will be no greater than the volume of iron withdrawn from the ocean. Accordingly, the Facility's operations will cause no net iron increases.
Desal Response Group – Conner Everts		
11.	We have now at least four years of water supply. We have reservoirs that are spilling. We have groundwater that is refilling. Even the Colorado River which looked like it might go dry has come up over 65 feet and their snowpack to build on this year as well. So, we do have time to breathe and think about this because when this decision is made it will be the first large scale plant in the Pacific coast and the largest in the western hemisphere.	The comment refers to conditions relevant to a wet climatic period. California is known to experience periodic wet and dry cycles. An objective of this project is to provide a drought-proof, reliable water supply. The decision on this Order has been the subject of due deliberation.
12.	"Our water demand is down about 20% across the state and we expect at least a portion of that to stay at that level."	See Response No. 135.

Jonathon Sim		
13.	"Tidewater gobies are federally endangered. These fish are actually washed out during the winter storms and stuff. And it's untrue that most of them die out there. They actually use this as a mechanism for migration to other estuaries where they reproduce."	No state or federal threatened or endangered species were collected during impingement and entrainment sampling at the HBGS intake. *See* Entrainment and Impingement Effects from Operation of the Huntington Beach Desalination Facility in Stand-alone Mode (Tenera Environmental; February 2011). The most abundant taxon of larval fish entrained (33% of all entrained species) was CIQ gobies - a small, bottom-dwelling fish that is common in bays and lagoons. The tidewater goby referenced by the commenter is a different species of goby and was not observed during the HBGS' entrainment sampling. Nearby adult populations of CIQ gobies are concentrated in localized habitats, such as Alamitos Bay, Anaheim Bay, and Talbert Marsh, and their larvae are dispersed in these environs and transported out into coastal waters by tidal flushing and prevailing currents. These larvae would experience higher rates of natural mortality than larvae that are retained in shallow bay habitats where they sustain resident adult populations.
14.	"[T]he numbers that they give on impingement and entrainment are …you can't take the biomass at a face value because they like this biomass that they refer to actually provides for a future stock of animals, fish like invertebrates. You know key word is future. You can't take it at a face value as what your biomass that you look at right now. Basically my point is that we can say for a fact that desalination intake or discharge does not have an impact on the environment because simply that we don't know enough about it and I urge that more is looked into it before we make a decision."	The comment provides no evidentiary basis that might place the impingement and entrainment estimates in doubt. Nor does the comment provide any rational basis to justify more study. The Discharger has conducted extensive analysis of the potential entrainment and impingement effects that might be associated with the Facility, and these findings have been well documented and incorporated in the Project application and Order.