Item No. 8

November 1, 2013

ERRATA SHEET

CHANGES TO TENTATIVE ORDER NO. R8-2013-0016, NPDES No. CA0105350

WASTE DISCHARGE AND WATER RECLAMATION REQUIREMENTS
FOR THE
CITY OF RIVERSIDE, DEPARTMENT OF PUBLIC WORKS
RIVERSIDE REGIONAL WATER QUALITY CONTROL PLANT
RIVERSIDE COUNTY

(Language deleted is ~~struck through~~)
(Language added is **bold and shaded)**

1. Order No. R8-2013-0016, page 16, modify Effluent Limitation A.1.f., as follows:

    f. Total Chlorine Residual:

        1) The total time during which the total chlorine residual values are above 0.1 mg/L (instantaneous maximum value) shall not exceed 7 hours and 26 minutes in any calendar month;
        2) No individual excursion above 0.1 mg/L shall exceed ~~5~~ **30** minutes; and
        3) No individual excursion shall exceed 5.0 mg/L.

California Regional Water Quality Control Board
Santa Ana Region

November 1, 2013

ITEM: *8

SUBJECT: Renewal of Waste Discharge and Producer/User Reclamation Requirements for the City of Riverside's Regional Water Quality Control Plant, Order No. R8-2013-0016, NPDES No. CA0105350, Riverside County

DISCUSSION:

See attached Fact Sheet

RECOMMENDATIONS:

Adopt Order No. R8-2013-0016, NPDES No. CA0105350 as presented.

COMMENT SOLICITATION:

Comments were solicited from the discharger and the following agencies:

U.S. Environmental Protection Agency (WTR-5) – Peter Kozelka, Ph.D
U.S. Army District, Los Angeles, Corps of Engineers - Regulatory Branch
U.S. Fish and Wildlife Service, Carlsbad
State Water Resources Control Board, Office of the Chief Counsel – David Rice
State Department of Fish and Wildlife, Ontario
California Department of Health Services, San Diego – Steve Williams
Riverside County Environmental Health Services – Sandy Bunchek
Riverside County Flood Control and Water Conservation District – Jason Uhley
Santa Ana Watershed Project Authority – Celeste Cantu
Orange County Water District - Nira Yamachika, Marsha Westropp
Inland Empire Waterkeeper - Meagan Brousseau
Orange County Coastkeeper - Garry Brown
Lawyers for Clean Water – Daniel Cooper

Table 2 - Discharge Locations

Discharge Points	Effluent Description	Discharge Point (Latitude)	Discharge Point (Longitude)	Receiving Water
001	Tertiary wastewater discharged directly to the Santa Ana River	33° 57' 55"N	117° 27' 28"W	Reach 3 of Santa Ana River
002	Tertiary wastewater commingled with Hole Lake effluent and then to the Santa Ana River	33° 57' 44"N	117° 29' 7"W	Reach 3 of Santa Ana River
003	Recycled water for irrigation of Toro turf.	33° 57' 47"N	117° 27' 41"W	Chino-South Groundwater Management Zone
004	Recycled water for Riverside Public Utilities distribution system	33° 57' 43"N	117° 27' 42"W	Various Groundwater Management Zones

Table 3 - Administrative Information

This Order was adopted by the Regional Water Board on:	November 1, 2013
This Order shall become effective on:	November 1, 2013
This Order shall expire on:	October 31, 2018
The U.S. Environmental Protection Agency (U.S. EPA) and the Regional Water Board have classified this discharge as a **major** discharge.	
The Discharger shall file a Report of Waste Discharge in accordance with Title 23, California Code of Regulations, not later than 180 days in advance of the Order expiration date as application for issuance of new waste discharge requirements.	

IT IS HEREBY ORDERED, that this Order supersedes Order No. R8-2006-0009 except for enforcement purposes, and, in order to meet the provisions contained in Division 7 of the California Water Code (CWC) and regulations adopted thereunder, and the provisions of the federal Clean Water Act (CWA) and regulations and guidelines adopted thereunder, the Discharger shall comply with the requirements in this Order.

I, Kurt V. Berchtold, Executive Officer, do hereby certify that Order No. R8-2013-0016 with all attachments is a full, true, and correct copy of an Order adopted by the California Regional Water Quality Control Board, Santa Ana Region, on November 1, 2013.

Kurt V. Berchtold, Executive Officer

Table of Contents

I. Discharger/Facility Information 6
II. Findings 6
III. Discharge Prohibitions 12
IV. Effluent Limitations and Discharge Specifications 13
A. Effluent Limitations – Discharge Points 001 and 002 13
1. Effluent Limitations for Discharges Under Conditions Without 20:1 Dilution in the Receiving Water 13
2. Effluent Limitations for Discharges Under Conditions With 20:1 or More Dilution in the Receiving Water 17
3. Toxicity Requirements 18
B. Recycled Water Specifications – Discharge Points 003 and 004 18
V. Receiving Water Limitations and Specifications 23
A. Surface Water Limitations 23
B. Groundwater Limitations 24
VI. Provisions 24
A. Standard Provisions 24
B. Monitoring and Reporting Program Requirements 26
C. Special Provisions 27
1. Reopener Provisions 27
2. Special Studies, Technical Reports and Additional Monitoring Requirements 27
3. Best Management Practices and Pollution Prevention 29
4. Construction, Operation and Maintenance Specifications 30
5. Special Provisions for Municipal Facilities (POTWs Only) 31
VII. Compliance Determination 34

LIST OF TABLES

Table 1 – Discharger/Facility Information 1
Table 2 - Discharge Locations 2
Table 3 - Administrative Information 2
Table 4 - Discharger/Facility Information 6
Table 5 - Basin Plan Beneficial Uses 9
Table 6 - Effluent Limitations Without 20:1 Dilution 13
Table 7 - Effluent Limitations With 20:1 Dilution 17
Table 8 - Recycled Water Limitations 18

LIST OF ATTACHMENTS

Attachment A – Definitions
Attachment B – Plant Location Map
Attachment C – Flow Schematic
Attachment D – Standard Provisions
Attachment E – Monitoring and Reporting Program
Attachment F – Fact Sheet
Attachment G – EPA Priority Pollutant List
Attachment H – Minimum Levels
Attachment I – Triggers for Monitoring of Priority Pollutants

I. DISCHARGER/FACILITY INFORMATION

The following Discharger is subject to waste discharge requirements as set forth in this Order:

Table 4 – Discharger/Facility Information

Discharger	City of Riverside-Department of Public Works
Discharger Contact	Tom Boyd, Public Works Director (951) 826-5575
Mailing Address	3900 Main St., Riverside, CA 92522
Facility	Riverside Regional Water Quality Control Plant
Facility Address	5950 Acorn Street, Riverside, CA 92504
Facility Contacts	Gary Valladao, Wastewater Systems Manager, (951) 351-6140 Edward Filadelfia, Regulatory Affairs & Compliance, (951) 351- 6080 Kevin Street, Regulatory Programs and Compliance Manager, (951) 351- 6007
Mailing Address	Same as Facility Address
Type of Facility	Publicly Owned Treatment Works (POTW)
Facility Design Flow	46 million gallons per day

II. FINDINGS

The California Regional Water Quality Control Board, Santa Ana Region (hereinafter Regional Water Board), finds:

A. **Background.** The City of Riverside, Department of Public Works (hereinafter Discharger) is currently discharging pursuant to Order No. R8-2006-0009 and National Pollutant Discharge Elimination System (NPDES) Permit No. CA0105350. The Discharger submitted a Report of Waste Discharge, dated September 27, 2010, and applied for a NPDES permit renewal to discharge from the Riverside Regional Water Quality Control Plant (hereinafter RWQCP, or Facility) up to 46 million gallons per day (mgd) of tertiary treated wastewater to Reach 3 of the Santa Ana River. The application was deemed complete on August 18, 2011.

For the purposes of this Order, references to the "Discharger" or "permittee" in applicable federal and State laws, regulations, plans, or policy are held to be equivalent to references to the Discharger herein.

B. **Facility Description**. The Discharger operates the Riverside Regional Water Quality Control Plant (RRWQCP). The RRWQCP is a municipal wastewater treatment plant located on a 121-acre site at 5950 Acorn Street in the City of Riverside, south of the Santa Ana River near the intersection of Van Buren Boulevard. The RRWQCP discharges tertiary treated wastewater to Reach 3 of the Santa Ana River. The RRWQCP is designed to tertiary treat 46 million gallons per day (mgd) of wastewater. The annual average daily flow for 2012 was 29 mgd.

C. **Legal Authorities.** This Order serves as Waste Discharge Requirements (WDRs) pursuant to Article 4, Chapter 4 of California Water Code (CWC) commencing with Section 13260. This Order shall also serve as an NPDES permit pursuant to Section 402 of the federal Clean Water Act (CWA) and implementing regulations adopted by the U.S. Environmental Protection Agency (USEPA) and Chapter 5.5, Division 7 of the CWC for point source discharges from this facility to the surface waters.

D. **Background and Rationale for Requirements.** The Regional Water Board developed the requirements in this Order based on information submitted as part of the application, through monitoring and reporting programs, and other available information. The Fact Sheet (Attachment F), which contains background information and rationale for Order requirements, is hereby incorporated into this Order and constitutes part of the Findings for this Order. Attachments A through E and G through I are also incorporated into this Order.

E. **Pretreatment Requirements.** The Discharger has established an approved regional pretreatment program. The approved pretreatment program and its components and control mechanisms, among others, are hereby made an enforceable condition of this Order.

F. **California Environmental Quality Act (CEQA).** Under CWC section 13389, the action to adopt these waste discharge requirements is exempt from the provisions of CEQA, Public Resources Code section 21000 et seq. (County of Los Angeles v. California State Water Resources Control Board (2006) 143 Ca. App.4th 985. Mod. (Nov 6, 2006, B184034) 50 Cal.Rptr.3d 619, 632-636). This action also involves the re-issuance of waste discharge requirements for an existing facility that discharges treated wastewater and as such, is exempt from the provisions of the California Environmental Quality Act (Commencing with Section 21100)pursuant to Title 14 of the California Code of Regulations Section 15301.

G. **Technology-based Effluent Limitations.** Section 301(b) of the CWA and implementing USEPA permit regulations at 40 CFR[1] 122.44, require that permits include conditions meeting applicable technology-based requirements at a minimum, and any more stringent effluent limitations necessary to meet applicable water quality standards. The discharge authorized by this Order must meet minimum federal technology-based requirements based on Secondary Treatment Standards at 40 CFR Part 133 and/or Best Professional Judgment (BPJ) in accordance with 40 CFR 125.3. A detailed discussion of the technology-based effluent limitations development is included in the Fact Sheet (Attachment F).

H. **Water Quality-Based Effluent Limitations.** Section 301(b) of the CWA and 40 CFR 122.44(d) require that permits include limitations more stringent than applicable federal technology-based requirements where necessary to achieve applicable water quality standards. This Order contains requirements, expressed as a technology equivalence requirement, more stringent than secondary treatment requirements that are necessary to meet applicable water quality standards. The rationale for these requirements, which consist of tertiary treatment or equivalent requirements or other provisions, is discussed in the Fact Sheet.

40 CFR 122.44(d)(1)(i) mandates that permits include effluent limitations for all pollutants that are or may be discharged at levels that have a reasonable potential to cause or contribute to an exceedance of a water quality standard, including numeric and narrative objectives within a standard. Where reasonable potential has been established for a pollutant, but there is no numeric criterion or objective for the pollutant, water quality-based effluent limitations (WQBELs) must be established using: (1) USEPA criteria guidance under CWA section 304(a), supplemented where necessary by other relevant information; (2) an indicator parameter for the pollutant of concern; or (3) a calculated numeric water quality criterion, such as a proposed state criterion or policy interpreting the state's narrative criterion, supplemented with other relevant information, as provided in 40 CFR 122.44(d)(1)(vi).

I. **Water Quality Control Plans.** The Regional Water Board adopted a revised Water Quality Control Plan for the Santa Ana Region (hereinafter Basin Plan) that became effective on January 24, 1995. The Basin Plan designates beneficial uses, establishes water quality objectives, and contains implementation programs and policies to achieve those objectives for all waters in the Santa Ana Region addressed through the plan.

[1] Title 40 of the Code of Federal Regulations

More recently, the Basin Plan was amended significantly to incorporate revised boundaries for groundwater subbasins, now termed "management zones", new nitrate-nitrogen and TDS objectives for the new management zones, and new nitrogen and TDS management strategies applicable to both surface and ground waters. The Regional Water Board adopted this Basin Plan Amendment on January 22, 2004. The State Water Resources Control Board (State Water Board) and Office of Administrative Law (OAL) approved the Amendment on September 30, 2004 and December 23, 2004, respectively. EPA approved the surface water standards components of the N/TDS Amendment on June 20, 2007.

In addition, the Basin Plan implements State Water Resources Control Board (State Water Board) Resolution No. 88-63, which established State policy that all waters, with certain exceptions, should be considered suitable or potentially suitable for municipal or domestic supply. Based on the criteria specified in the State Water Board Resolution, the Basin Plan specifies that Reach 3 of the Santa Ana River and downstream reaches, as well as most of its tributaries, are excepted from the municipal and domestic supply beneficial use.

As discussed in detail in the Fact Sheet (Attachment F), beneficial uses applicable to Reach 3 of Santa Ana River are as follows:

Table 5 - Basin Plan Beneficial Uses

Discharge Point	Receiving Water Name	Beneficial Use(s)
001 and 002	Reach 3 of Santa Ana River, near Van Buren Blvd Bridge	Present or Potential: Agricultural supply, groundwater recharge, water contact recreation, non-contact water recreation, warm freshwater habitat, wildlife habitat, and rare, threatened or endangered species.
001, 002, and 003	Chino-South Groundwater Management Zone	Present or Potential: Municipal and domestic supply, agricultural supply, industrial service supply, and industrial process supply.
004	Chino-South; Arlington; Riverside-A, D, E, and F; and Temescal Groundwater Management Zones	Present or Potential: Municipal and domestic supply, agricultural supply, industrial service supply, and industrial process supply.

Requirements of this Order implement the applicable provisions of the Basin Plan.

J. **National Toxics Rule (NTR) and California Toxics Rule (CTR).** USEPA adopted the NTR on December 22, 1992, and later amended it on May 4, 1995 and November 9, 1999. About forty criteria in the NTR were applicable in California. On May 18, 2000, USEPA adopted the CTR, which incorporated the NTR criteria that were applicable in California. The CTR was amended on February 13, 2001. The NTR and the CTR contain water quality criteria for priority pollutants.

K. **State Implementation Policy.** On March 2, 2000, the State Water Board adopted the Policy for Implementation of Toxics Standards for Inland Surface Waters, Enclosed Bays, and Estuaries of California (State Implementation Policy or SIP). The SIP became effective on April 28, 2000 with respect to the priority pollutant criteria promulgated for California by the USEPA through the NTR and to the priority pollutant objectives established by the Regional Water Board in the Basin Plan. The SIP became effective on May 18, 2000 with respect to the priority pollutant criteria promulgated by the USEPA through the CTR. The State Water Board adopted amendments to the SIP on February 24, 2005 that became effective on July 13, 2005. The SIP establishes implementation provisions for priority pollutant criteria and objectives and provisions for chronic toxicity control. Requirements of this Order implement the SIP.

L. **Alaska Rule.** On March 30, 2000, USEPA revised its regulation that specifies when new and revised State and Tribal water quality standards (WQS) become effective for CWA purposes (40 CFR 131.21, 65 FR 24641, April 27, 2000). Under the revised regulation (also known as the Alaska Rule), new and revised standards submitted to USEPA after May 30, 2000, must be approved by USEPA before being used for CWA purposes. The final rule also provides that standards already in effect and submitted to USEPA by May 30, 2000, may be used for CWA purposes, whether or not approved by USEPA.

M. **Antidegradation Policy.** 40 CFR 131.12 requires that State water quality standards include an antidegradation policy consistent with the federal policy. The State Water Board established California's antidegradation policy in State Water Board Resolution No. 68-16. Resolution No. 68-16 incorporates the federal antidegradation policy where the federal policy applies under federal law. Resolution No. 68-16 requires that existing quality of waters be maintained unless degradation is justified based on specific findings. The Regional Water Board's Basin Plan implements, and incorporates by reference, both the State and federal antidegradation policies. As discussed in detail in the Fact Sheet the permitted discharge is consistent with the antidegradation provision of 40 CFR Section 131.12 and State Water Board Resolution No. 68-16.

N. **Anti-Backsliding Requirements.** Sections 402(o)(2) and 303(d)(4) of the CWA and federal regulations at 40 CFR 122.44(l) prohibit backsliding in NPDES permits. These anti-backsliding provisions require effluent limitations in a reissued permit to be as stringent as those in the previous permit. As discussed in the Fact Sheet, all effluent limitations in this Order are at least as stringent as the effluent limitations in the previous Order. Therefore, this Order conforms to the anti-backsliding requirements of the CWA.

O. **Monitoring and Reporting.** Water Code Sections 13267 and 13383 authorize the Regional Water Board to require technical and monitoring reports. 40 CFR 122.48 requires that all NPDES permits specify requirements for recording and reporting monitoring results. The Monitoring and Reporting Program establishes monitoring and reporting requirements to implement State and federal requirements. This Monitoring and Reporting Program is provided in Attachment E.

P. **Biosolids Requirements.** On February 19, 1993, the USEPA issued a final rule for the use and disposal of sewage sludge, 40 CFR, Part 503. This rule requires that producers of sewage sludge meet certain reporting, handling, and disposal requirements. The State of California has not been delegated the authority to implement this program, therefore, the U.S. Environmental Protection Agency is the implementing agency. However, this Order includes biosolids monitoring requirements.

Q. **State General Waste Discharge Requirements for Sanitary Sewer Systems.** The State Water Board issued General Waste Discharge Requirements for Sanitary Sewer Systems, Water Quality Order No. 2006-0003 on May 2, 2006, requiring public agencies that own sanitary sewer systems, comprised of more than one mile of pipes or sewer lines, to enroll for coverage under the General Order. The General Order requires agencies to develop sanitary sewer management plans (SSMPs) and report all sanitary sewer overflows (SSOs). This Order requires the Discharger to continue its enrollment under the General Order.

R. **Standard and Special Provisions.** Standard Provisions, which apply to all NPDES permits in accordance with 40 CFR Sections 122.41 and additional conditions applicable to specified categories of permits in accordance with 40 CFR 122.42, are provided in Attachment D. The Discharger must comply with all standard provisions and with those additional conditions that are applicable under 40 CFR 122.42. The Regional Water Board has also included in this Order special provisions applicable to the Discharger. A rationale for the special provisions contained in this Order is provided in the attached Fact Sheet (Attachment F).

S. **Provisions and Requirements Implementing State Law.** The provisions/requirements in subsections IV.B. and V.B. of this Order are included to implement state law only. These provisions/requirements are not required or authorized under the federal CWA; consequently, violations of these provisions/requirements are not subject to the enforcement remedies that are available for NPDES violations.

T. **Notification of Interested Parties.** The Regional Water Board has notified the Discharger and interested agencies and persons of its intent to prescribe Waste Discharge Requirements for the discharge and has provided them with an opportunity to submit their written comments and recommendations. Details of notification are provided in the Fact Sheet (Attachment F) of this Order.

U. **Consideration of Public Comment.** The Regional Water Board, in a public meeting, heard and considered all comments pertaining to the discharge. Details of the Public Hearing are provided in the Fact Sheet (Attachment F) of this Order.

III. DISCHARGE PROHIBITIONS

A. The discharge of wastewater at a location or in a manner different from those described in this Order is prohibited.

B. The bypass or overflow of untreated wastewater or wastes to surface waters or surface water drainage courses is prohibited, except as allowed in Standard Provisions (Attachment D), section I. G.

C. The discharge of any substances in concentrations toxic to animal or plant life is prohibited.

D. The discharge of any radiological, chemical, or biological warfare agent or high level radiological waste is prohibited.

E. The injection of fats, oil, and grease and food processing waste directly into an anaerobic digester is prohibited, unless the discharger has developed and is implementing standard operating procedures for this activity. The standard operating procedures shall address spill prevention, spill response, vector control, traffic control, feed quality control, and process control. The discharger shall provide training to its staff on these standard operating procedures.

IV. EFFLUENT LIMITATIONS AND DISCHARGE SPECIFICATIONS

A. Effluent Limitations – Discharge Points 001 and 002

Unless otherwise specifically specified herein, compliance with the following effluent limitations is measured at monitoring location M-001A as described in the attached Monitoring and Reporting Program (Attachment E).

1. Effluent Limitations for Discharges Under Conditions Without 20:1 Dilution in the Receiving Water

Except as specified in Effluent Limitation IV.A.2., below, the Discharger shall comply with the following at Discharge Points 001 and 002:

a. Effluent Limitations:

Table 6 - Effluent Limitations Without 20:1 Dilution

Parameter	Units	Effluent Limitations		
		Average Monthly	Average Weekly	Maximum Daily
Biochemical Oxygen Demand 5-day @ 20°C	mg/L	20	30	--
Total Suspended Solids	mg/L	20	30	--
Ammonia-Nitrogen	mg/L	5.0	--	--
Cyanide (Free)	µg/l	4.2	--	8.5

b. Percent Removal:

The average monthly percent removal of BOD 5-day at 20^0C and total suspended solids shall not be less than 85 percent.

c. Total Dissolved Solids:

1) The 12-month flow weighted running average total dissolved solids constituent concentration shall not exceed 650 mg/l, unless the discharger demonstrates to the satisfaction of the Regional Board's Executive Officer that:

i. Discharges in excess of the TDS limits are due to the quality of water supply sources utilized in the Discharger's service area, and that all reasonable steps, as agreed upon by Executive Officer, have been taken to ensure that the best quality supplies are obtained and utilized in the Dischargers service area; and/or

ii. Discharges in excess of the TDS limits are due to chemical additions in the treatment process needed to meet waste discharge requirements, and the Discharger has taken all reasonable steps to optimize chemical additions so as to minimize the increases; and

iii. The Discharger implements a plan, with the approval of the Executive Officer, to offset TDS discharges in excess of the 650 mg/L limit.

2) The 12-month flow weighted running average total dissolved solids concentration shall not exceed the 12-month flow weighted running average total dissolved solids concentration in the water supply by more than 250 mg/l, unless the Discharger demonstrates to the satisfaction of the Regional Board's Executive Officer that TDS discharge in excess of 250 mg/l mineral increment are due solely to chemical additions in the treatment process needed to meet waste discharge requirements, and the discharger has taken all reasonable steps to optimize chemical additions so as to minimize the TDS increases.

d. Total Inorganic Nitrogen (TIN):

The 12-month flow weighted running average TIN concentration shall not exceed 10 mg/l. unless the Discharger implements a plan, with the approval of the Executive Officer, to offset TIN discharges in excess of the TIN limits.

e. Disinfected Tertiary Treated Wastewater:

The discharge shall at all times be adequately oxidized, filtered, and disinfected tertiary treated wastewater and shall meet the following limitations:

1) Turbidity:
   a) When filtration is through natural undisturbed soils or a bed of filter media, the turbidity of the filter effluent shall not exceed any of the following:
      i. Average of 2 Nephelometric Turbidity Unit (NTU) within any 24-hour period;
      ii. 5 NTU more than 5 percent of the time in any 24-hour period; and
      iii. 10 NTU more than one minute.

   b) When filtration is through microfiltration, the turbidity of the filter effluent shall not exceed any of the following:
      i. 0.2 Nephelometric Turbidity Unit (NTU) more than 5 % of the time within a 24-hour period; and
      ii. 0.5 NTU at any time.

2) Disinfection:

   a) When a chlorine disinfection process is utilized following filtration, a CT (the product of total chlorine residual and modal contact time measured at the same point) value of not less than 450 milligram-minutes per liter at all times with a modal contact time of at least 90 minutes[2], based on peak dry weather design flow[3]; shall be provided[4].

   b) When a disinfection process combined with the filtration process is utilized, the combined process shall demonstrate inactivation and/or removal of 99.999 percent of the plaque-forming units of F-specific bacteriophage MS2, or polio virus in the wastewater. A virus that is at least as resistant to disinfection as polio virus may be used for purposes of the demonstration.

[2] The modal contact time requirement is applicable only to the use of recycled water and not to surface water discharges, provided the receiving water provides a 1:1 dilution. The receiving water considered here shall exclude upstream POTW effluent flow.
[3] "Peak Dry Weather Flow" means the arithmetic mean of the maximum peak flow rates sustained over some period of time (for example three hours) during the maximum 24-hour dry weather period. Dry weather period is defined as period of little or no rainfall.
[4] Modal contact time and CT shall be calculated based on the minimum one-hour average value in a 24-hr period.

c) Where ultraviolet (UV) disinfection is solely used for disinfection, UV disinfection shall meet the requirements specified in the Ultraviolet Disinfection Guidelines for Drinking Water and Water Reuse, published by the National Water Research Institute, Second Edition, unless otherwise approved by the California Department of Public Health. The Discharger's UV disinfection system shall not be utilized as the sole source of disinfection except under emergency conditions unless it is re-commissioned under CDPH oversight.

3) Coliform:

a) The weekly average concentration of total coliform bacteria shall not exceed a Most Probable Number (MPN) of 2.2 total coliform bacteria per 100 milliliters (ml).
To comply with this limit, the 7-day median MPN must not exceed 2.2 per 100 milliliters on any day during a calendar week. However, only one violation is to be recorded for each calendar week, even if the 7-day median MPN value is greater than 2.2 for more than one day in the week.

b) The MPN of total coliform bacteria shall not exceed 23 per 100 ml in more than one sample during in any 30-day period.

c) No total coliform bacteria sample shall exceed an MPN of 240 per 100 ml.

4) Total Chlorine Residual:

a) The total time during which the total chlorine residual values are above 0.1 mg/L (instantaneous maximum value) shall not exceed 7 hours and 26 minutes in any calendar month;

b) No individual excursion above 0.1 mg/L shall exceed 5 minutes; and

c) No individual excursion shall exceed 5.0 mg/L.

f. pH:

The pH of the discharge shall be within 6.5 to 8.5 pH units at all times. Compliance with pH limits shall be determined as follows:

1) The total time during which the pH is outside the range of 6.5 - 8.5 pH units shall not exceed 7 hours and 26 minutes in any calendar month; and
2) No individual excursion from the range of 6.5 – 8.5 pH units shall exceed 60 minutes.

2. Effluent Limitations for Discharges Under Conditions With 20:1 or More Dilution in the Receiving Water

Whenever the flow[5] in Santa Ana River, as measured at monitoring location R-001U results in a dilution of 20:1 (receiving water flow : wastewater flow) or more, the Discharger shall comply with the following effluent limitations in lieu of those specified in Effluent Limitation IV.A.1., above :

a. Physical/Biological Limitations:

Table 7 - Effluent Limitations With 20:1 Dilution

Parameter	Units	Effluent Limitations	
		Average Monthly	Average Weekly
Biochemical Oxygen Demand 5-day @ 20°C	mg/L	30	45
Total Suspended Solids	mg/L	30	45

b. Percent Removal:

The average monthly percent removal of BOD 5-day at 20°C and total suspended solids shall not be less than 85 percent.

c. Coliform:

The weekly average number of coliform bacteria does not exceed a median of 23 per 100 milliliters as determined from the daily coliform bacteria values for the last seven (7) days. To comply with the limit, the 7-day median MPN must not exceed 23 per 100 milliliters on any day during the week. However, only one violation is recorded for each calendar week, even if the 7-day median MPN value is greater than 23 for more than one day in the week.

d. pH:

The pH of the discharge shall be within 6.5 to 8.5 pH units at all times. Compliance with pH limits shall be determined as follows:

1) The total time during which the pH is outside the range of 6.5 - 8.5 pH units shall not exceed 7 hours and 26 minutes in any calendar month; and
2) No individual excursion from the range of 6.5 – 8.5 pH units shall exceed 60 minutes.

[5] Exclusive of discharges to surface waters from upstream publicly owned treatment works.

3. Toxicity Requirements

Compliance with toxicity requirements shall be measured at monitoring location M-001A (including Van Buren Bridge location) or M-002.

a. There shall be no acute or chronic toxicity in the plant effluent nor shall the plant effluent cause any acute or chronic toxicity in the receiving water. All waters shall be maintained free of toxic substances in concentrations which are toxic to, or which produce detrimental physiological responses in human, plant, animal, or indigenous aquatic life. This Order contains no numeric limitation for toxicity. However, the Discharger shall conduct chronic toxicity monitoring.

b. The Discharger shall implement the accelerated monitoring as specified in Attachment E when the result of any single chronic toxicity test of the effluent exceeds 1.0 TUc.

c. The Discharger shall implement the IITRE work plan required by Provision VI.C.2.c., below whenever the results of chronic toxicity tests of the effluent exceed:

1) A two month median value of 1.0 TUc for survival or reproduction endpoint or,
2) Any single test value of 1.7 TUc for survival endpoint.

B. Recycled Water Specifications – Discharge Points 003 and 004

1. The Discharger shall comply with the following limitations for the production of recycled water.

a. Physical/Biological Limitations:

Table 8 - Recycled Water Limitations

Parameter	Units	Recycled Water Limitations	
		Average Monthly	Average Weekly
Biochemical Oxygen Demand 5-day @ 20°C	mg/L	20	30
Total Suspended Solids	mg/L	20	30

b. Total Dissolved Solids:

1). The 12-month flow weighted running average total dissolved solids concentration of the discharge shall not exceed 650 mg/l unless the Discharger demonstrates to the satisfaction of the Regional Water Board's Executive Officer that:

a) Discharges in excess of the TDS limits are due to the quality of water supply sources utilized in the Discharger's service area, and that all reasonable steps, as agreed upon by the Executive Officer, have been taken to ensure that the best quality supplies are obtained and utilized in the Discharger's service area; and/or

b) Discharges in excess of the TDS limits are due solely to chemical additions in the treatment process needed to meet waste discharge requirements, and the Discharger has taken all reasonable steps to optimize chemical additions so as to minimize the increases; and

c) The Discharger implements an acceptable plan to offset discharges in excess of the TDS limit.

2). The 12-month flow weighted running average total dissolved solids concentration of the discharge shall not exceed the 12-month flow weighted running average total dissolved solids concentration in the water supply by more than 250 mg/L unless the Discharger demonstrates to the satisfaction of the Regional Water Board's Executive Officer that TDS discharges in excess of the 250 mg/L mineral increment are due solely to chemical additions in the treatment process needed to meet waste discharge requirements, and the Discharger has taken all reasonable steps to optimize chemical additions so as to minimize the TDS increases.

c. Tertiary Treated Recycled Water:

Recycled water, as described in Section 60307(a) of Division 4, Chapter 3, Title 22, California Code of Regulations, supplied for irrigation of food crops, parks and playground, school yards, residential landscaping and other irrigation uses not specified in Section 60304(a) of Division 4, Chapter 3, Title 22, California Code of Regulations or not prohibited in other Sections of the California Code of Regulations shall at all times be adequately oxidized, filtered, and disinfected tertiary treated wastewater and shall meet the following limitations:

1) Turbidity:

a) When filtration is through natural undisturbed soils or a bed of filter media, the turbidity of the filter effluent shall not exceed any of the following:

i. Average of 2 Nephelometric Turbidity Unit (NTU) within any 24-hour period;

ii. 5 NTU more than 5 percent of the time in any 24-hour period; and
iii. 10 NTU more than one minute.

b) When filtration is through microfiltration, the turbidity of the filter effluent shall not exceed any of the following:
   i. 0.2 Nephelometric Turbidity Unit (NTU) more than 5 % of the time within a 24-hour period; and
   ii. 1) 0.5 NTU at any time

2) Disinfection: The discharge shall meet the following:

a. When a chlorine disinfection process following filtration that provides a CT (the product of total chlorine residual and modal contact time measured at the same point) value of not less than 450 milligram-minutes per liter at all times with a modal contact time of at least 90 minutes, based on peak dry weather design flow.

b. When a disinfection process combined with the filtration process is utilized, the combined process shall demonstrate inactivation and/or removal of 99.999 percent of the plaque-forming units of F-specific bacteriophage MS2, or polio virus in the wastewater. A virus that is at least as resistant to disinfection as polio virus may be used for purposes of the demonstration.

c. Where ultraviolet (UV) disinfection is solely used for disinfection, UV disinfection shall meet the requirements specified in the Ultraviolet Disinfection Guidelines for Drinking Water and Water Reuse, published by the National Water Research Institute, Second Edition, unless otherwise approved by the CDPH. The Discharger's UV disinfection system shall not be utilized as the sole source of disinfection except under emergency conditions unless it is re-commissioned under CDPH oversight.

3) <u>Coliform</u>:

The disinfected wastewater shall meet the following:

a) The average weekly[6] number of total coliform shall not exceed a Most Probable Number (MPN) of 2.2 total coliform bacteria per 100 milliliters (ml).

b) The number of total coliform organism shall not exceed an MPN of 23 total coliform bacteria per 100 ml in more than one sample in any 30-day period.

[6] To comply with the average weekly limit, the 7-day median MPN must not exceed 2.2 per 100 milliliters on any day during the week. However, only one violation is recorded for each calendar week, even if the 7-day median MPN value is greater than 2.2 for more than one day in the week.

c) No total coliform sample shall exceed an MPN of 240 total coliform bacteria per 100 ml.

d. Recycled water used for irrigation of food crops where the edible portion is produced above ground and not contacted by the recycled water shall at all times be adequately oxidized and disinfected so that the average weekly[6] concentration of total coliform bacteria in the disinfected effluent does not exceed a most probable number (MPN) of 2.2 per 100 milliliters utilizing the bacteriological results of the last seven days for which analyses have been completed, and the number of total coliform bacteria does not exceed an MPN of 23 per 100 milliliters in more than one sample during any 30-day period.

e. Recycled water supplied for the uses listed below shall be an oxidized and disinfected water so that:

1) The average weekly[6] total coliform bacteria in the disinfected effluent does not exceed a most probable number (MPN) of 23 per 100 milliliters utilizing the bacteriological results of the last seven days for which analyses have been completed. To comply with the limit, the 7-day median MPN must not exceed 23 per 100 milliliters on any day during the week. However, only one violation is recorded for each calendar week, even if the average weekly[6] MPN value is greater than 23 for more than one day in the week, and

2) The number of total coliform bacteria does not exceed an MPN of 240 per 100 milliliters in more than one sample in any 30 day period.

3) The uses are:

a) Industrial boiler feed, nonstructural fire-fighting, backfill consolidation around nonpotable piping, soil compaction, mixing concrete, dust control on roads and streets, cleaning roads, sidewalks and outdoor work areas and industrial process water that will not come into contact with workers.

b) Irrigation of cemeteries, freeway landscaping, restricted access golf courses, ornamental nursery stock and sod farms where access by the general public is restricted, pasture for animals producing milk for human consumption, and any nonedible vegetation where access is controlled so that irrigated area cannot be used as if it were part of a park, playground or school yard.

2. The Discharger shall be responsible for assuring that recycled water is delivered and utilized in conformance with this Order, the recycling criteria contained in Title 22, Division 4, Chapter 3, Sections 60301 through 60355, California Code of Regulations. The Discharger shall conduct periodic inspections of the facilities of the recycled water users to monitor compliance by the users with this Order.

3. The storage, delivery, or use of recycled water shall not individually or collectively, directly or indirectly, result in a pollution or nuisance, or adversely affect water quality, as defined in the California Water Code.

4. Prior to delivering recycled water to any new user, the Discharger shall submit to the Regional Water Board and CDPH a report containing the following information for review and approval:

   a. The specific boundaries of the proposed use site area, including a map showing the location of each facility, drinking water fountain, and impoundment to be used.

   b. The average number of persons estimated to be served at each use site area on a daily basis.

   c. The person or persons responsible for operation of the recycled water system at each use area.

   d. The specific use to be made of the recycled water at each use area.

   e. The methods to be used to assure that the installation and operation of the recycled system will not result in cross connections between the recycled water and potable water piping systems. This shall include a description of the pressure, dye or other test methods to be used to test the system.

   f. Plans and specifications which include following:
      1. Proposed piping system to be used.
      2. Pipe locations of both the recycled and potable systems.
      3. Type and location of the outlets and plumbing fixtures that will be accessible to the public.
      4. The methods and devices to be used to prevent backflow of recycled water into the potable water system.
      5. Plan notes relating to specific installation and use requirements.

5. The Discharger shall establish and enforce Rules and Regulations for Recycled Water users, governing the design and construction of recycled water use facilities and the use of recycled water in accordance with the uniform statewide recycling criteria established pursuant to the California Water Code Section 13521.

   a. Use of recycled water by the Discharger shall be consistent with its Rules and Regulations for Recycled Water Use.

   b. Any revisions made to the Rules and Regulations shall be subject to the review and approval of the Regional Water Board and CDPH. The revised Rules and Regulations or a letter certifying that the Discharger's Rules and Regulations are in conformance with this Order, shall be submitted to the Regional Water Board within 60 days of adoption of this Order.

6. The Discharger shall submit a Title 22 Engineering Report for review and approval by the Regional Water Board and CDPH before making any changes to treatment processes. The Engineering Report shall be in compliance with the California Code of Regulations, Title 22, Chapter 3.

V. RECEIVING WATER LIMITATIONS AND SPECIFICATIONS

A. Surface Water Limitations

1. Receiving water limitations are based upon water quality objectives contained in the Basin Plan. As such, they are a required part of this Order. The discharge shall not cause the following in the Santa Ana River, Reach 3, or in downstream Reaches of the Santa Ana River:

    a. Coloration of the receiving waters, which causes a nuisance or adversely affects beneficial uses.
    b. Deposition of oil, grease, wax or other materials in the receiving waters in concentrations which result in a visible film or in coating objects in the water, or which cause a nuisance or affect beneficial uses.
    c. An increase in the amounts of suspended or settleable solids in the receiving waters, which will cause a nuisance or adversely affect beneficial uses as a result of controllable water quality factors.
    d. Taste or odor-producing substances in the receiving waters at concentrations, which cause a nuisance or adversely affect beneficial uses.
    e. The presence of radioactive materials in the receiving waters in concentrations, which are deleterious to human, plant or animal life.
    f. The depletion of the dissolved oxygen concentration below 5.0 mg/l.
    g. The temperature of the receiving waters to be raised above 90°F (32°C) during the period of June through October, or above 78°F (26°C) during the rest of the year.
    h. The concentration of pollutants in the water column, sediments, or biota to adversely affect the beneficial uses of the receiving water. The discharge shall not result in the degradation of inland surface water communities and populations, including vertebrate, invertebrate, and plant species.

2. The discharge of wastes shall not cause a violation of any applicable water quality standards for receiving waters adopted by the Regional Water Board or State Water Board, as required by the Clean Water Act and regulations adopted thereunder.

3. Pollutants not specifically mentioned and limited in this Order shall not be discharged at levels that will bioaccumulate in aquatic resources to levels, which are harmful to human health.

4. The discharge shall not contain constituent concentrations of mercury that will result in the bioaccumulation of methylmercury in fish flesh tissue greater than 0.3 milligram methylmercury/kilogram. (See also Section VI.C.1.b. and VI.C.2., below).

B. Groundwater Limitations

1. The discharge of waste or the use of recycled water shall not cause the underlying groundwater to be degraded, to exceed water quality objectives, unreasonably affect beneficial uses, or cause a condition of pollution or nuisance.

VI. PROVISIONS

A. Standard Provisions

1. The Discharger shall comply with all Standard Provisions included in Attachment D of this Order.

2. The Discharger shall comply with the following provisions:

   a. Neither the treatment nor the discharge of waste shall create, or threaten to create, a nuisance or pollution as defined by Section 13050 of the California Water Code.

   b. The Discharger shall maintain a copy of this Order at the site so that it is available to site operating personnel at all times. Key operating personnel shall be familiar with its content.

   c. The Discharger shall take all reasonable steps to minimize any adverse impact to receiving waters resulting from noncompliance with any requirements specified in this Order, including such accelerated or additional monitoring as necessary to determine the nature and impact of the noncomplying discharge.

   d. The Discharger shall optimize chemical additions needed in the treatment process to meet waste discharge requirements so as to minimize total dissolved solid increases in the treated wastewater.

   e. The provisions of this Order are severable, and if any provision of this Order, or the application of any provisions of this Order to any circumstance, is held invalid, the application of such provision to other circumstances, and the remainder of this Order shall not be affected thereby.

   f. Collected screenings, sludge, and other solids removed from liquid wastes shall be disposed of in a manner approved by the Regional Water Board's Executive Officer.

g. If the Discharger demonstrates a correlation between the biological oxygen demand (BOD_5) and total organic carbon (TOC) concentrations in the effluent to the satisfaction of the Executive Officer, compliance with the BOD_5 limits contained in this Order may be determined based on analyses of the TOC of the effluent.

h. In the event of any change in control or ownership of land or waste discharge facility presently owned or controlled by the Discharger, the Discharger shall notify the succeeding owner or operator of the existence of this Order by letter, a copy of which shall be forwarded to the Regional Water Board.

i. By September 1, 2017, the treatment facilities shall be designed, constructed, operated, and maintained to prevent inundation or washout due to floods with a 100-year return frequency. The Discharger shall provide progress reports regarding its efforts to achieve compliance with this provision in the monitoring reports that are due in January and July of each year until compliance is achieved.

j. Failure to comply with provisions or requirements of this Order, or violation of other applicable laws or regulations governing discharges from this facility, may subject the Discharger to administrative or civil liabilities, criminal penalties, and/or other enforcement remedies to ensure compliance. Additionally, certain violations may subject the Discharger to civil or criminal enforcement from appropriate local, state, or federal law enforcement entities.

k. In the event the Discharger does not comply or will be unable to comply for any reason, with any prohibition, maximum daily effluent limitation, or receiving water limitation of this Order, the Discharger shall notify the Regional Water Board. All noncompliance that may have an immediate impact on human health or the environment shall be reported by telephone (951) 782-4130 within 24 hours of having knowledge of such noncompliance, and shall confirm this notification in writing within five days, unless the Regional Water Board waives confirmation. The written notification shall state the nature, time, duration, and cause of noncompliance, and shall describe the measures being taken to remedy the current noncompliance and, prevent recurrence including, where applicable, a schedule of implementation. Other noncompliance requires written notification as above at the time of the normal monitoring report.

l. This Order may be modified, revoked and reissued, or terminated for cause including, but not limited to, the following.

1) Violation of any terms or conditions of this Order;
2) Obtaining this Order by misrepresentation or failure to disclose fully all relevant facts, or;
3) In addition to any other grounds specified herein, this Order may be modified or revoked at any time if, on the basis of any data, the Regional Water Board determines that continued discharges may cause unreasonable degradation of water quality.

m. If an effluent standard or discharge prohibition (including any schedule of compliance specified in such effluent standard or prohibition) is established under Section 307 (a) of the Clean Water Act for a toxic pollutant which is present in the discharge, and such standard or prohibition is more stringent than any limitation for that pollutant in this Order, this Order may be modified or revoked and reissued to conform to the effluent standard or discharge prohibition.

n. The Discharger shall file with the Regional Water Board a Report of Waste Discharge at least 180 days before making any material change in the character, location, or volume of the discharge. A material change includes, but is not limited to, the following:

1) Adding a major industrial waste discharge to a discharge of essentially domestic sewage, or adding a new process or product by an industrial facility resulting in a change in the character of the waste.
2) Significantly changing the disposal method or location, such as changing the disposal to another drainage area or water body.
3) Significantly changing the method of treatment.
4) Increasing the treatment plant design capacity beyond that specified in this Order.

B. Monitoring and Reporting Program Requirements

The Discharger shall comply with the Monitoring and Reporting Program, and future revisions thereto, in Attachment E of this Order. This monitoring and reporting program may be modified by the Executive Officer at any time during the term of this Order, and may include an increase in the number of parameters to be monitored, the frequency of the monitoring or the number and size of samples to be collected. Any increase in the number of parameters to be monitored, the frequency of the monitoring or the number and size of samples to be collected may be reduced back to the levels specified in the original monitoring and reporting program at the discretion of the Executive Officer.

C. Special Provisions

1. Reopener Provisions

a. This Order may be reopened to address any changes in State or federal plans, policies or regulations that would affect the quality requirements for the discharges.

b. This Order may be reopened to include effluent limitations for pollutants determined to be present in the discharge in concentrations that pose a reasonable potential to cause or contribute to violations of water quality objectives.

c. This Order may be reopened and modified in accordance with the requirements set forth at 40 CFR 122 and 124, to include the appropriate conditions or limits to address demonstrated effluent toxicity based on newly available information, or to implement any EPA-approved new State water quality standards applicable to effluent toxicity.

d. This Order may be reopened for modification, or revocation and reissuance, as a result of the detection of a reportable priority pollutant generated by special conditions included in this Order. These special conditions may be, but are not limited to, fish tissue sampling, whole effluent toxicity, monitoring requirements on internal waste stream(s), and monitoring for surrogate parameters. Additional requirements may be included in this Order as a result of the special condition monitoring data.

e. This Order may be reopened to include an appropriate bioaccumulation based effluent limit for mercury if test results (as required in Attachment E of this Order) show that the concentration levels of methylmercury in the fish tissue are at or above 0.3 milligrams per kilogram.

f. This Order may be reopened to incorporate appropriate biosolids requirements if the State Water Resources Control Board and the Regional Water Quality Control Board are given the authority to implement regulations contained in 40 CFR 503.

2. Special Studies, Technical Reports and Additional Monitoring Requirements

a. The Discharger is an active participant in the comprehensive mercury investigation program currently being conducted by a group of Santa Ana River system dischargers. If the Discharger discontinues its involvement with this comprehensive program, the Discharger shall, within 60 days of that date, submit for the approval of the Executive Officer its plan for the annual testing of mercury levels in fish flesh samples collected from the Santa Ana River, upstream of, at, and downstream of the point of the discharge point. Upon approval, the Discharger shall implement the plan.

b. Within 60-days of the effective date of this Order, the Discharger shall review and update, if necessary, its report that details the manner in which sampling, monitoring and reporting will be performed as required in the Order.

c. Toxicity Reduction Requirements.

1) Within 60-days of the effective date of this Order, the Discharger shall review and update, if necessary, its Initial Investigation Toxicity Reduction Evaluation (IITRE) work plan that describes the steps the Discharger intends to follow if required by subsection 2), below. The work plan shall include at a minimum:

a) A description of the investigation and evaluation techniques that will be used to identify potential causes/sources of the exceedance, effluent variability, and/or efficiency of the treatment system in removing toxic substances. This shall include a description of an accelerated chronic toxicity testing program.
b) A description of the methods to be used for investigating and maximizing in-house treatment efficiency and good housekeeping practices.
c) A description of the evaluation process to be used to determine if implementation of a more detailed TRE\TIE is necessary.

2) The Discharger shall implement the IITRE work plan whenever the results of chronic toxicity tests of the effluent exceed:

a) A two month median value of 1.0 TUc for survival or reproduction endpoint or,
b) Any single test value of 1.7 TUc for survival endpoint.

3) Within 60-days of the effective date of this Order, the Discharger shall review and update, if necessary, its detailed Toxicity Reduction Evaluation and Toxicity Identification Evaluation (TRE/TIE) work plan that describes the steps the Discharger intends to follow if the implemented IITRE fails to identify the cause of, or to rectify, the toxicity.

4) The Discharger shall use as guidance, at a minimum, EPA manuals EPA/600/2-88/070 (industrial), EPA/600/4-89-001A (municipal), EPA/600/6-91/005F (Phase I), EPA/600/R-92/080 (Phase II), and EPA-600/R-92/081 (Phase III) to identify the cause(s) of toxicity. If during the life of this Order the aforementioned EPA manuals are revised or updated, the revised/updated manuals may also be used as guidance. The detailed TRE/TIE work plan shall include:

a) Further actions to investigate and identify the cause of toxicity;

b) Actions the Discharger will take to mitigate the impact of the discharge and to prevent the recurrence of toxicity; and

c) A schedule for these actions.

5) The Discharger shall implement the TRE/TIE workplan if the IITRE fails to identify the cause of, or rectify, the toxicity, or if in the opinion of the Executive Officer the IITRE does not adequately address an identified toxicity problem.

6) The Discharger shall assure that adequate resources are available to implement the required TRE/TIE.

3. Best Management Practices and Pollution Prevention

a. Pollutant Minimization Program

1) The Discharger shall develop and conduct a Pollutant Minimization Program (PMP) as further described below when there is evidence (e.g., sample results reported as DNQ when the effluent limitation is less than the MDL, sample results from analytical methods more sensitive than those methods required by this Order, presence of whole effluent toxicity, health advisories for fish consumption, results of benthic or aquatic organism tissue sampling) that a priority pollutant is present in the effluent above an effluent limitation and either:

a) A sample result is reported as DNQ and the effluent limitation is less than the RL; or

b) A sample result is reported as ND and the effluent limitation is less than the MDL.

2) The PMP shall include, but not be limited to, the following actions and submittals acceptable to the Regional Water Board:

a) An annual review and semi-annual monitoring of potential sources of the reportable priority pollutant(s), which may include fish tissue monitoring and other bio-uptake sampling;

b) Quarterly monitoring for the reportable priority pollutant(s) in the influent to the wastewater treatment system;

c) Submittal of a control strategy designed to proceed toward the goal of maintaining concentrations of the reportable priority pollutant(s) in the effluent at or below the effluent limitation;

d) Implementation of appropriate cost-effective control measures for the reportable priority pollutant(s), consistent with the control strategy; and

e) An annual status report that shall be sent to the Regional Water Board including:

(1) All PMP monitoring results for the previous year;
(2) A list of potential sources of the reportable priority pollutant(s);
(3) A summary of all actions undertaken pursuant to the control strategy; and
(4) A description of actions to be taken in the following year.

4. Construction, Operation and Maintenance Specifications

a. The Discharger's wastewater treatment plant shall be supervised and operated by persons possessing certificates of appropriate grade pursuant to Title 23, Division 3, Chapter 14, California Code of Regulations.

b. The Discharger shall provide safeguards to assure that should there be reduction, loss, or failure of electric power, the Discharger will comply with the requirements of this Order.

c. The Discharger shall update as necessary, the "Operation and Maintenance Manual (O&M Manual)" which it has developed for the treatment facility to conform to latest plant changes and requirements. The O&M Manual shall be readily available to operating personnel onsite. The O&M Manual shall include the following:

1) Description of the treatment plant table of organization showing the number of employees, duties and qualifications and plant attendance schedules (daily, weekends and holidays, part-time, etc). The description should include documentation that the personnel are knowledgeable and qualified to operate the treatment facility so as to achieve the required level of treatment at all times.
2) Detailed description of safe and effective operation and maintenance of treatment processes, process control instrumentation and equipment.
3) Description of laboratory and quality assurance procedures.
4) Process and equipment inspection and maintenance schedules.
5) Description of safeguards to assure that, should there be reduction, loss, or failure of electric power, the Discharger will be able to comply with requirements of this Order.
6) Description of preventive (fail-safe) and contingency (response and cleanup) plans for controlling accidental discharges, and for minimizing the effect of such events. These plans shall identify the possible sources (such as loading and storage areas, power outage, waste treatment unit failure, process equipment failure, tank and piping failure) of accidental discharges, untreated or partially treated waste bypass, and polluted drainage.

5. Special Provisions for Municipal Facilities (POTWs Only)

a. Sewer Collection System Requirements: The Discharger's collection system is part of the system that is subject to this Order. As such, the Discharger must properly operate and maintain its collection system (40 CFR 122.41(e)). The Discharger must report any non-compliance (40 CFR 122.41(l)(6) and (7)) and mitigate any discharge from the collection system in violation of this Order (40 CFR 122.41(d)). See the Order at Standard Provision VI.A.2.b. and Attachment D, sections I.D, V.E, V.H, and I.C.

   Furthermore, the General Waste Discharge Requirements for Collection System Agencies (Order No. 2006-0003 DWQ) contains requirements for operation and maintenance of collection systems and for reporting and mitigating sanitary sewer overflows. While the Discharger must comply with both Order No. 2006-0003 DWQ and this Order, the General Collection System WDR more clearly and specifically stipulates requirements for operation and maintenance and for reporting and mitigating sanitary sewer overflows. The Discharger and other governmental agencies that are discharging wastewater into the facility are required to obtain enrollment for regulation under Order No. 2006-0003-DWQ.

b. Biosolids Disposal Requirements

   1) Collected screenings, sludge, and other solids removed from liquid wastes shall be disposed of in a manner that is consistent with State Water Resources Control Board and Integrated Waste Management Board's joint regulations (Title 27) of the California Code of Regulations and approved by the Water Board's Executive Officer.

   2) The use and disposal of biosolids shall comply with existing Federal and State laws and regulations, including permitting requirements and technical standards included in 40 CFR 503.

   3) Any proposed change in biosolids use or disposal practice from a previously approved practice should be reported to the Executive Officer and EPA Regional Administrator at least 90 days in advance of the change.

   4) The Discharger shall take all reasonable steps to minimize or prevent any discharge or biosolids use or disposal that has the potential of adversely affecting human health or the environment.

c. Pretreatment Program

1) The Discharger shall update as necessary and implement an acceptable pretreatment program.

2) The Discharger shall update as necessary the appropriate contractual agreements with all governmental agencies[7]. The contractual agreements shall give the Discharger the authority to implement and enforce the EPA approved pretreatment program within the sewer service areas of the treatment facility. The Discharger shall assure that any other steps necessary to provide this implementation and enforcement authority (e.g. adoption of ordinances, etc.) are taken by all governmental agencies. If a governmental agency has an EPA approved pretreatment program for any portion of the service area of the treatment facility, the Discharger's pretreatment program shall contain provisions ensuring that that governmental agency's program is implemented. In the event that any agency discharging to Discharger's facility fails to effectively implement its individual EPA approved pretreatment program, the Discharger shall implement and enforce its approved program within that agency's service area.

3) The Discharger shall ensure that the pretreatment programs for all contributory agencies discharging to the Discharger's treatment facility are implemented and enforced. The Discharger shall be responsible and liable for the performance of all Control Authority pretreatment requirements contained in 40 CFR 403, including any subsequent regulatory revisions to Part 403. Where Part 403 or subsequent revisions place mandatory actions upon the Discharger as Control Authority but does not specify a timetable for completion of the actions, the Discharger shall submit for approval of the Regional Water Board's Executive Officer, a schedule for implementation of the required actions and shall implement the approved schedule. The schedule for implementation shall be submitted within six months from the date that such mandatory actions are established. For violations of pretreatment requirements, the Discharger shall be subject to enforcement actions, penalties, fines and other remedies by the EPA, or other appropriate parties, as provided in the CWA, as amended (33 USC 1351 et seq.). The EPA or the Regional Water Board may also initiate enforcement action against an industrial user (IU) for non-compliance with applicable standards and requirements as provided in the CWA.

7 *Member agencies and sewering agencies discharging wastewater into the facility.*

4) The Discharger shall perform the pretreatment functions as required in 40 CFR Part 403 including, but not limited to:

   a) Enforce the pretreatment requirements under 40 CFR 403.5 and 403.6;

   b) Implement the necessary legal authorities as provided in 40 CFR 403.8(f)(1);

   c) Implement the programmatic functions as provided in 40 CFR 403.8(f)(2);

   d) Publish a list of significant non-compliance as required by 40 CFR 403.8(f)(2)(vii); and

   e) Provide the requisite funding and personnel to implement the pretreatment program as provided in 40 CFR 403.8(f)(3).

5) The following wastes shall not be introduced into the treatment works:

   a) Wastes which create a fire or explosion hazard in the treatment works;

   b) Wastes which will cause corrosive structural damage to treatment works, but, in no case, wastes with a pH lower than 5.0 unless the works are designed to accommodate such wastes;

   c) Wastes at a flow rate and/or pollutant discharge rate which is excessive over relatively short time periods so that there is a treatment process upset and subsequent loss of treatment efficiency;

   d) Solid or viscous wastes in amounts that would cause obstruction to the flow in sewers or otherwise interfere with the proper operation of the treatment works.

6) The Discharger shall ensure compliance with any existing or future pretreatment standard promulgated by EPA under Section 307 of the CWA or amendments thereto for any discharge to the municipal system.

7) The Discharger shall comply with effluent standards or prohibitions established under Section 307(a) of the CWA for toxic pollutants within the time provided in the regulations that establish these standards or prohibitions, even if this Order has not yet been modified to incorporate the requirement.

8) The Discharger shall require each user not in compliance with any pretreatment standard to submit periodic notice (over intervals not to exceed nine months) of progress toward compliance with applicable toxic and pretreatment standards developed pursuant to the CWA or amendments thereto. The Discharger shall forward a copy of such notice to the Regional Water Board and to the EPA Regional Administrator.

II. COMPLIANCE DETERMINATION

Compliance with the effluent limitations contained in Section IV of this Order will be determined as specified below:

A. General.
Compliance with effluent limitations for priority pollutants shall be determined using sample reporting protocols defined in the MRP and Appendix A of this Order. For purposes of reporting and administrative enforcement by the Regional and State Water Boards, Dischargers shall be deemed out of compliance with effluent limitations if the concentration of the priority pollutant in the monitoring sample is greater than the effluent limitation and greater than or equal to the minimum level (ML).

B. Average Monthly Effluent Limitation (AMEL).
If the average (or when applicable, the median determined by subsection B above for multiple sample data) of daily discharges over a calendar month exceeds the AMEL for a given parameter, this will represent a single violation, though the Discharger may be considered out of compliance for each day of that month for that parameter (e.g., resulting in 31 days of non-compliance in a 31-day month). If only a single sample is taken during the calendar month and the analytical result for that sample exceeds the AMEL, the Discharger may be considered out of compliance for that calendar month. The Discharger will only be considered out of compliance for days when the discharge occurs. For any one calendar month during which no sample (daily discharge) is taken, no compliance determination can be made for that calendar month.

C. Average Weekly Effluent Limitation (AWEL).
If the average (or when applicable, the median determined by subsection B above for multiple sample data) of daily discharges over a calendar week exceeds the AWEL for a given parameter, this will represent a single violation, though the Discharger may be considered out of compliance for each day of that week for that parameter, resulting in 7 days of non-compliance. If only a single sample is taken during the calendar week and the analytical result for that sample exceeds the AWEL, the Discharger may be considered out of compliance for that calendar week. The Discharger will only be considered out of compliance for days when the discharge occurs. For any one calendar week during which no sample (daily discharge) is taken, no compliance determination can be made for that calendar week.

D. Maximum Daily Effluent Limitation (MDEL).
If a daily discharge exceeds the MDEL for a given parameter, the Discharger will be considered out of compliance for that parameter for that 1 day only within the reporting period. For any 1 day during which no sample is taken, no compliance determination can be made for that day.

E. Instantaneous Minimum Effluent Limitation.
If the analytical result of a single grab sample is lower than the instantaneous minimum effluent limitation for a parameter, the Discharger will be considered out of compliance for that parameter for that single sample. Non-compliance for each sample will be considered separately (e.g., the results of two grab samples taken within a calendar day that both are lower than the instantaneous minimum effluent limitation would result in two instances of non-compliance with the instantaneous minimum effluent limitation).

F. Instantaneous Maximum Effluent Limitation.
If the analytical result of a single grab sample is higher than the instantaneous maximum effluent limitation for a parameter, the Discharger will be considered out of compliance for that parameter for that single sample. Non-compliance for each sample will be considered separately (e.g., the results of two grab samples taken within a calendar day that both exceed the instantaneous maximum effluent limitation would result in two instances of non-compliance with the instantaneous maximum effluent limitation).

G. Multiple Sample Data.
When determining compliance with an AMEL for priority pollutants and more than one sample result is available in a month, the Discharger shall compute the arithmetic mean unless the data set contains one or more reported determinations of "Detected, but Not Quantified" (DNQ) or "Not Detected" (ND). In those cases, the Discharger shall compute the median in place of the arithmetic mean in accordance with the following procedure:

1. The data set shall be ranked from low to high, ranking the reported ND determinations lowest, DNQ determinations next, followed by quantified values (if any). The order of the individual ND or DNQ determinations is unimportant.

2. The median value of the data set shall be determined. If the data set has an odd number of data points, then the median is the middle value. If the data set has an even number of data points, then the median is the average of the two values around the middle unless one or both of the points are ND or DNQ, in which case the median value shall be the lower of the two data points where DNQ is lower than a value and ND is lower than DNQ.

H. 12-Month Running Average Effluent Limitation.
Compliance with the 12-month running average limit under Effluent Limitations and Discharge Specification IV.A.1.c., IV.A.1.d., and IV.B.1.b. shall be determined by the arithmetic mean of the last twelve monthly averages.

I. TDS Increment Limit.
Compliance with Effluent Limitations and Discharge Specifications IV.A.1.c.2., and IV.B.1.b. may be determined by comparing the flow weighted TDS quality of the influent or secondary effluent to the flow weighted TDS water supply quality.

J. Priority Pollutants.

The Discharger shall be deemed out of compliance with an effluent limitation if the concentration of the priority pollutant in the monitoring sample is greater than the effluent limitation. Compliance determination shall be based on the reporting level selected from minimum level (ML)[8] specified in Attachment "I" of this Order, unless an alternative reporting level is approved by the Regional Water Board's Executive Officer. When there is more than one ML value for a given substance, the Discharger shall select the ML value that is below the calculated effluent limitation, and use its associated analytical method, listed in Attachment "I" of this Order. If no ML value is below the effluent limitation, then the Regional Water Board will select as the reporting level the lowest ML value and its associated analytical method.

K. Non-Priority Pollutants.

The discharge shall be considered to be in compliance with an effluent limitation that is less than or equal to the PQL specified in Attachment H of this Order if the arithmetic mean of all test results for the monitoring period is less than the constituent effluent limitation. Analytical results that are less than the specified PQL shall be assigned a value of zero.

L. Compliance Determination

Compliance determinations shall be based on available analyses for the time interval associated with the effluent limitation. Where only one sample analysis is available in a specified time interval (e. g., monthly or weekly average), that sample shall serve to characterize the discharge for the entire interval. If quarterly sample results show noncompliance with the average monthly limit and that sample result is used for compliance determinations for each month of the quarter, then three separate violations of the average monthly limit shall be deemed to have occurred.

Compliance with a single effluent limitation which applies to a group of chemicals (e.g., PCBs), based on a single sample shall be determined by considering the concentrations of individual members of the group to be zero if the analytical response for the individual chemical falls below the method detection limit (MDL or PQL) for that chemical.

---

8 *Minimum level is the concentration at which the entire analytical system must give a recognizable signal and acceptable point. The ML is the concentration in a sample that is equivalent to the concentration of the lowest calibration standard analyzed by a specific analytical procedure, assuming that all the method specified sample weights, volumes, and processing steps have been followed.*

ATTACHMENT A – DEFINITIONS

Arithmetic Mean (μ), also called the average, is the sum of measured values divided by the number of samples. For ambient water concentrations, the arithmetic mean is calculated as follows:

Arithmetic mean = $\mu = \Sigma x / n$ where: Σx is the sum of the measured ambient water concentrations, and
n is the number of samples.

Average Monthly Effluent Limitation (AMEL): the highest allowable average of daily discharges over a calendar month, calculated as the sum of all daily discharges measured during a calendar month divided by the number of daily discharges measured during that month.

Average Weekly Effluent Limitation (AWEL): the highest allowable average of daily discharges over a calendar week (Sunday through Saturday), calculated as the sum of all daily discharges measured during a calendar week divided by the number of daily discharges measured during that week.

Best Management Practices (BMPs) are methods, measures, or practices designed and selected to reduce or eliminate the discharge of pollutants to surface waters from point and nonpoint source discharges including storm water. BMPs include structural and non-structural controls, and operation and maintenance procedures, which can be applied before, during, and/or after pollution producing activities.

Bioaccumulative pollutants are those substances taken up by an organism from its surrounding medium through gill membranes, epithelial tissue, or from food and subsequently concentrated and retained in the body of the organism.

Carcinogenic pollutants are substances that are known to cause cancer in living organisms.

Coefficient of Variation (*CV*) is a measure of the data variability and is calculated as the estimated standard deviation divided by the arithmetic mean of the observed values.

Criteria Continuous Concentration (CCC) equals the highest concentration of a pollutant to which aquatic life can be exposed for an extended period of time (4 days) without deleterious effects.

Criteria Maximum Concentration (CMC) equals the highest concentration of a pollutant to which aquatic life can be exposed for a short period of time without deleterious effects.

Daily Discharge: Daily Discharge is defined as either: (1) the total mass of the constituent discharged over the calendar day (12:00 am through 11:59 pm) or any 24-hour period that reasonably represents a calendar day for purposes of sampling (as specified in the permit), for a constituent with limitations expressed in units of mass or; (2) the unweighted arithmetic mean

measurement of the constituent over the day for a constituent with limitations expressed in other units of measurement (e.g., concentration).

The daily discharge may be determined by the analytical results of a composite sample taken over the course of one day (a calendar day or other 24-hour period defined as a day) or by the arithmetic mean of analytical results from one or more grab samples taken over the course of the day.

Detected, but Not Quantified (DNQ) are those sample results less than the RL, but greater than or equal to the laboratory's MDL.

Dilution Credit is the amount of dilution granted to a discharge in the calculation of a water quality-based effluent limitation, based on the allowance of a specified mixing zone. It is calculated from the dilution ratio or determined through conducting a mixing zone study or modeling of the discharge and receiving water.

Dilution Ratio is the critical low flow of the upstream receiving water divided by the flow of the effluent discharged.

Effluent Concentration Allowance (ECA) is a value derived from the water quality criterion/objective, dilution credit, and ambient background concentration that is used, in conjunction with the coefficient of variation for the effluent monitoring data, to calculate a long-term average (LTA) discharge concentration. The ECA has the same meaning as waste load allocation (WLA) as used in U.S. EPA guidance (Technical Support Document For Water Quality-based Toxics Control, March 1991, second printing, EPA/505/2-90-001).

Estimated Chemical Concentration is the estimated chemical concentration that results from the confirmed detection of the substance by the analytical method below the ML value.

Existing Discharger means any discharger that is not a new discharger. An existing discharger includes an "increasing discharger" (i.e., an existing facility with treatment systems in place for its current discharge that is or will be expanding, upgrading, or modifying its existing permitted discharge after the effective date of this Policy).

Infeasible means not capable of being accomplished in a successful manner within a reasonable period of time, taking into account economic, environmental, legal, social, and technological factors.

Inland Surface Waters are all surface waters of the State that do not include the ocean, enclosed bays, or estuaries.

Instantaneous Maximum Effluent Limitation: the highest allowable value for any single grab sample or aliquot (i.e., each grab sample or aliquot is independently compared to the instantaneous maximum limitation).

Instantaneous Minimum Effluent Limitation: the lowest allowable value for any single grab sample or aliquot (i.e., each grab sample or aliquot is independently compared to the instantaneous minimum limitation).

Load Allocation (LA) is the portion of receiving water's total maximum daily load that is allocated to one of its nonpoint sources of pollution or to natural background sources.

Maximum Daily Effluent Limitation (MDEL) means the highest allowable daily discharge of a pollutant, over a calendar day (or 24-hour period). For pollutants with limitations expressed in units of mass, the daily discharge is calculated as the total mass of the pollutant discharged over the day. For pollutants with limitations expressed in other units of measurement, the daily discharge is calculated as the arithmetic mean measurement of the pollutant over the day.

MEC: Maximum Effluent Concentration.

Median is the middle measurement in a set of data. The median of a set of data is found by first arranging the measurements in order of magnitude (either increasing or decreasing order). If the number of measurements (n) is odd, then the median = $X_{(n+1)/2}$. If n is even, then the median = $(X_{n/2} + X_{(n/2)+1})/2$ (i.e., the midpoint between the $n/2$ and $n/2+1$).

Method Detection Limit (MDL) is the minimum concentration of a substance that can be measured and reported with 99 percent confidence that the analyte concentration is greater than zero, as defined in 40 CFR 136, Appendix B, revised as of May 14, 1999.

Minimum Level (ML) is the concentration at which the entire analytical system must give a recognizable signal and acceptable calibration point. The ML is the concentration in a sample that is equivalent to the concentration of the lowest calibration standard analyzed by a specific analytical procedure, assuming that all the method specified sample weights, volumes, and processing steps have been followed.

Mixing Zone is a limited volume of receiving water that is allocated for mixing with a wastewater discharge where water quality criteria can be exceeded without causing adverse effects to the overall water body.

New Discharger includes any building, structure, facility, or installation from which there is, or may be, a discharge of pollutants, the construction of which commenced after the effective date of this Policy.

Not Detected (ND) are those sample results less than the laboratory's MDL.

Objectionable Bottom Deposits are an accumulation of materials or substances on or near the bottom of a water body, which creates conditions that adversely impact aquatic life, human health, beneficial uses, or aesthetics. These conditions include, but are not limited to, the accumulation of pollutants in the sediments and other conditions that result in harm to benthic organisms, production of food chain organisms, or fish egg development. The presence of such deposits shall be determined by RWQCB(s) on a case-by-case basis.

Persistent pollutants are substances for which degradation or decomposition in the environment is nonexistent or very slow.

Pollutant Minimization Program (PMP) means waste minimization and pollution prevention actions that include, but are not limited to, product substitution, waste stream recycling, alternative waste management methods, and education of the public and businesses. The goal of the PMP shall be to reduce all potential sources of a priority pollutant(s) through pollutant minimization (control) strategies, including pollution prevention measures as appropriate, to maintain the effluent concentration at or below the water quality-based effluent limitation. Pollution prevention measures may be particularly appropriate for persistent bioaccumulative priority pollutants where there is evidence that beneficial uses are being impacted. The Regional Water Board may consider cost-effectiveness when establishing the requirements of a PMP. The completion and implementation of a Pollution Prevention Plan, if required pursuant to CWC Section 13263.3(d), shall be considered to fulfill the PMP requirements.

Pollution Prevention means any action that causes a net reduction in the use or generation of a hazardous substance or other pollutant that is discharged into water and includes, but is not limited to, input change, operational improvement, production process change, and product reformulation (as defined in Water Code Section 13263.3). Pollution prevention does not include actions that merely shift a pollutant in wastewater from one environmental medium to another environmental medium, unless clear environmental benefits of such an approach are identified to the satisfaction of the SWRCB or RWQCB.

Process Optimization means minor changes to the existing facility and treatment plant operations that optimize the effectiveness of the existing treatment processes.

Public Entity includes the federal government or a state, county, city and county, city, district, public authority, or public agency.

Reporting Level (RL) is the ML corresponding to an approved analytical method for reporting a sample result that is selected either from Appendix 4 of the SIP by the Regional Water Board in accordance with Section 2.4.2 of the SIP or established in accordance with Section 2.4.3 of the SIP. The ML is based on the proper application of method-based analytical procedures for sample preparation and the absence of any matrix interferences. Other factors may be applied to the ML depending on the specific sample preparation steps employed. For example, the treatment typically applied in cases where there are matrix-effects is to dilute the sample or sample aliquot by a factor of ten. In such cases, this additional factor must be applied to the ML in the computation of the RL.

Source of Drinking Water is any water designated as municipal or domestic supply (MUN) in a RWQCB basin plan.

Standard Deviation (σ) is a measure of variability that is calculated as follows:

$$\sigma = (\Sigma[(x - \mu)^2]/(n - 1))^{0.5}$$

where:

x is the observed value;

μ is the arithmetic mean of the observed values; and

n is the number of samples.

Toxicity Reduction Evaluation (TRE) is a study conducted in a step-wise process designed to identify the causative agents of effluent or ambient toxicity, isolate the sources of toxicity, evaluate the effectiveness of toxicity control options, and then confirm the reduction in toxicity. The first steps of the TRE consist of the collection of data relevant to the toxicity, including additional toxicity testing, and an evaluation of facility operations and maintenance practices, and best management practices. A Toxicity Identification Evaluation (TIE) may be required as part of the TRE, if appropriate. (A TIE is a set of procedures to identify the specific chemical(s) responsible for toxicity. These procedures are performed in three phases (characterization, identification, and confirmation) using aquatic organism toxicity tests.)

Use Attainability Analysis is a structured scientific assessment of the factors affecting the attainment of the use which may include physical, chemical, biological and economic factors as described in 40 CFR 131.10(g) (40 CFR 131.3, revised as of July 1, 1997).

Water Effect Ratio (WER) is an appropriate measure of the toxicity of a material obtained in a site water divided by the same measure of the toxicity of the same material obtained simultaneously in a laboratory dilution water.

12-Month Running Average Effluent Limitation (12-MRAEL): the highest allowable average of monthly discharges over last twelve months, calculated as the sum of all monthly discharges measured during last twelve months divided by the number of monthly discharges measured during that time period.

ATTACHMENT B – PLANT LOCATION MAP

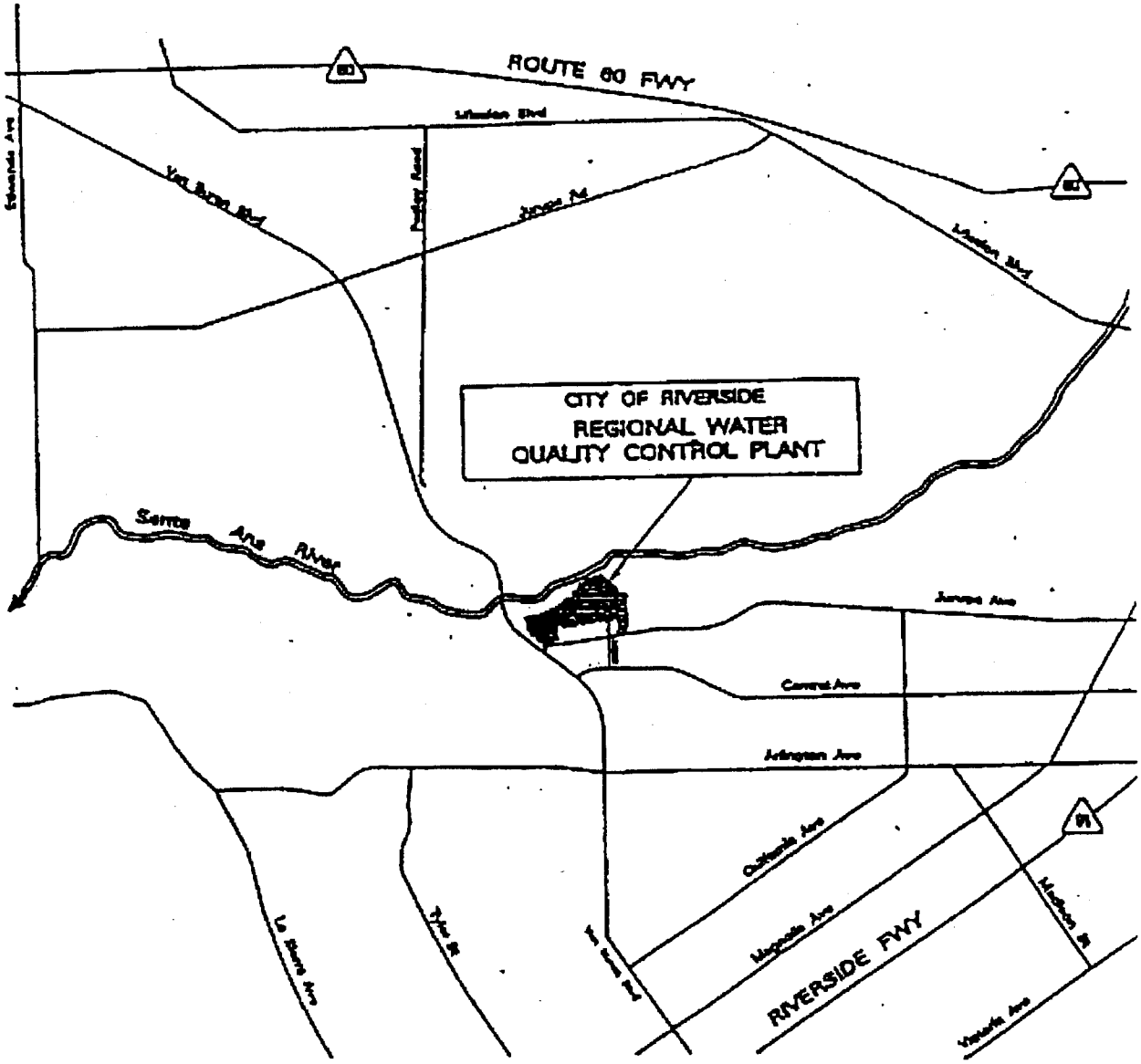

CITY OF RIVERSIDE

REGIONAL WATER
QUALITY CONTROL PLANT

VICINITY MAP

ATTACHMENT C – FLOW SCHEMATIC

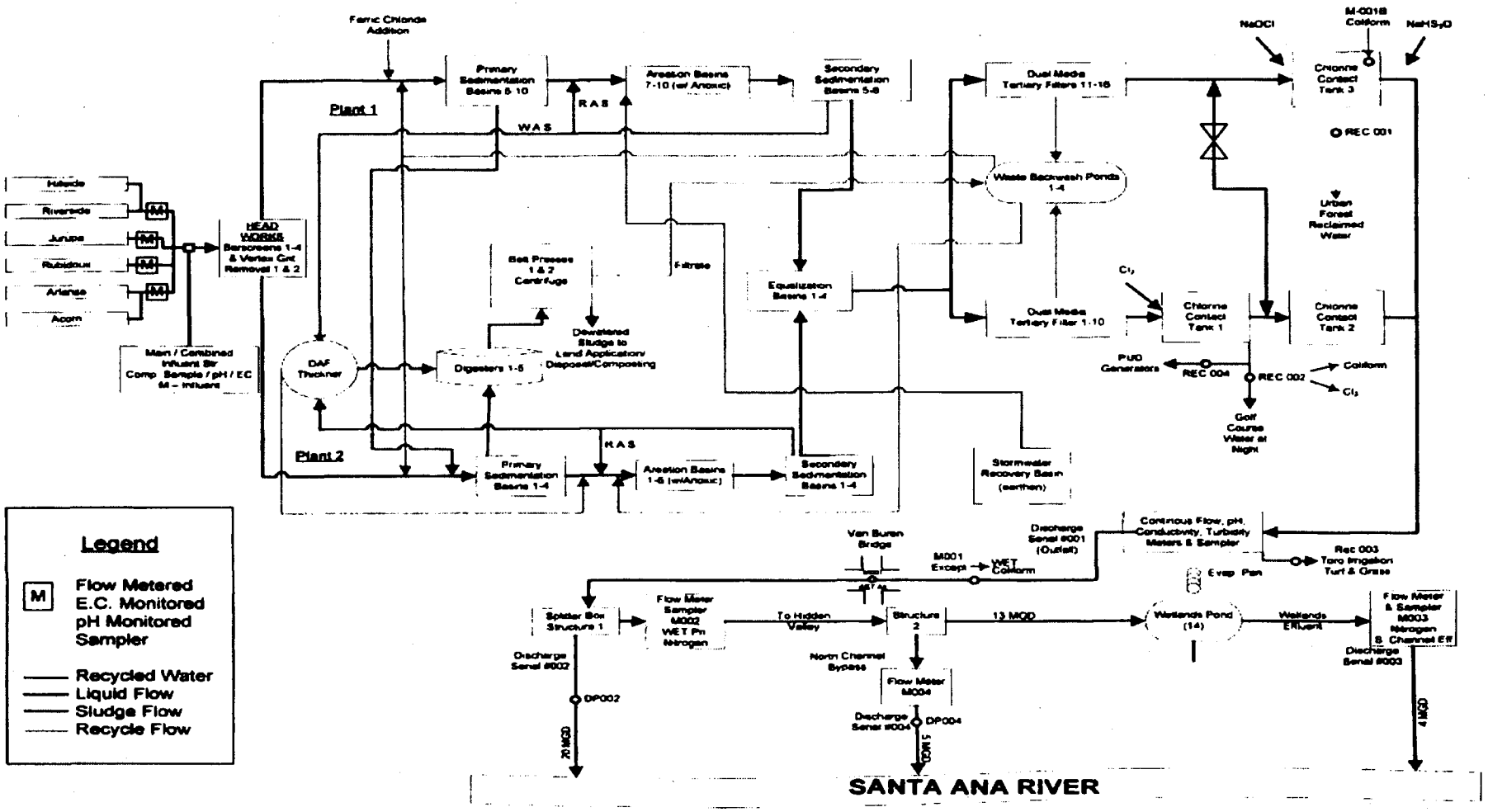

ATTACHMENT D – STANDARD PROVISIONS

I. STANDARD PROVISIONS – PERMIT COMPLIANCE

A. Duty to Comply

1. The Discharger must comply with all of the conditions of this Order. Any noncompliance constitutes a violation of the Clean Water Act (CWA) and the California Water Code (CWC) and is grounds for enforcement action, for permit termination, revocation and reissuance, or modification; or denial of a permit renewal application [*40 CFR §122.41(a)*].

2. The Discharger shall comply with effluent standards or prohibitions established under Section 307(a) of the CWA for toxic pollutants and with standards for sewage sludge use or disposal established under Section 405(d) of the CWA within the time provided in the regulations that establish these standards or prohibitions, even if this Order has not yet been modified to incorporate the requirement [*40 CFR §122.41(a)(1)*].

B. Need to Halt or Reduce Activity Not a Defense

It shall not be a defense for a Discharger in an enforcement action that it would have been necessary to halt or reduce the permitted activity in order to maintain compliance with the conditions of this Order [*40 CFR §122.41(c)*].

C. Duty to Mitigate

The Discharger shall take all reasonable steps to minimize or prevent any discharge or sludge use or disposal in violation of this Order that has a reasonable likelihood of adversely affecting human health or the environment [*40 CFR §122.41(d)*].

D. Proper Operation and Maintenance

The Discharger shall at all times properly operate and maintain all facilities and systems of treatment and control (and related appurtenances) which are installed or used by the Discharger to achieve compliance with the conditions of this Order. Proper operation and maintenance also includes adequate laboratory controls and appropriate quality assurance procedures. This provision requires the operation of backup or auxiliary facilities or similar systems that are installed by a Discharger only when necessary to achieve compliance with the conditions of this Order [*40 CFR §122.41(e)*].

E. Property Rights

1. This Order does not convey any property rights of any sort or any exclusive privileges [*40 CFR §122.41(g)*].

2. The issuance of this Order does not authorize any injury to persons or property or invasion of other private rights, or any infringement of State or local law or regulations [*40 CFR §122.5(c)*].

F. Inspection and Entry

The Discharger shall allow the Regional Water Quality Control Board (RWQCB), State Water Resources Control Board (SWRCB), United States Environmental Protection Agency (USEPA), and/or their authorized representatives (including an authorized contractor acting as their representative), upon the presentation of credentials and other documents, as may be required by law, to [*40 CFR §122.41(i)*] [*CWC 13383(c)*]:

1. Enter upon the Discharger's premises where a regulated facility or activity is located or conducted, or where records are kept under the conditions of this Order [*40 CFR §122.41(i)(1)*];

2. Have access to and copy, at reasonable times, any records that must be kept under the conditions of this Order [*40 CFR §122.41(i)(2)*];

3. Inspect and photograph, at reasonable times, any facilities, equipment (including monitoring and control equipment), practices, or operations regulated or required under this Order [*40 CFR §122.41(i)(3)*];

4. Sample or monitor, at reasonable times, for the purposes of assuring Order compliance or as otherwise authorized by the CWA or the CWC, any substances or parameters at any location [*40 CFR §122.41(i)(4)*].

G. Bypass

1. Definitions

   a. "Bypass" means the intentional diversion of waste streams from any portion of a treatment facility [*40 CFR §122.41(m)(1)(i)*].

   b. "Severe property damage" means substantial physical damage to property, damage to the treatment facilities, which causes them to become inoperable, or substantial and permanent loss of natural resources that can reasonably be expected to occur in the absence of a bypass. Severe property damage does not mean economic loss caused by delays in production [*40 CFR §122.41(m)(1)(ii)*].

2. Bypass not exceeding limitations – The Discharger may allow any bypass to occur which does not cause exceedances of effluent limitations, but only if it is for essential maintenance to assure efficient operation. These bypasses are not subject to the provisions listed in Standard Provisions – Permit Compliance I.G.3, I.G.4, and I.G.5 below [*40 CFR §122.41(m)(2)*].

3. Prohibition of bypass – Bypass is prohibited, and the Regional Water Board may take enforcement action against a Discharger for bypass, unless [*40 CFR §122.41(m)(4)(i)*]:

   a. Bypass was unavoidable to prevent loss of life, personal injury, or severe property damage [*40 CFR §122.41(m)(4)(A)*];

   b. There were no feasible alternatives to the bypass, such as the use of auxiliary treatment facilities, retention of untreated wastes, or maintenance during normal periods of equipment downtime. This condition is not satisfied if adequate back-up equipment should have been installed in the exercise of reasonable engineering judgment to prevent a bypass that occurred during normal periods of equipment downtime or preventive maintenance [*40 CFR §122.41(m)(4)(B)*]; and

   c. The Discharger submitted notice to the Regional Water Board as required under Standard Provisions – Permit Compliance I.G.5 below [*40 CFR §122.41(m)(4)(C)*].

4. The Regional Water Board may approve an anticipated bypass, after considering its adverse effects, if the Regional Water Board determines that it will meet the three conditions listed in Standard Provisions – Permit Compliance I.G.3 above [*40 CFR §122.41(m)(4)(ii)*].

5. Notice

   a. Anticipated bypass. If the Discharger knows in advance of the need for a bypass, it shall submit a notice, if possible at least 10 days before the date of the bypass [*40 CFR §122.41(m)(3)(i)*].

   b. Unanticipated bypass. The Discharger shall submit notice of an unanticipated bypass as required in Standard Provisions - Reporting V.E below (24-hour notice) [*40 CFR Section 122.41(m)(3)(ii)*].

H. Upset

Upset means an exceptional incident in which there is unintentional and temporary noncompliance with technology based permit effluent limitations because of factors beyond the reasonable control of the permittee. An upset does not include noncompliance to the extent caused by operational error, improperly designed treatment facilities, inadequate treatment facilities, lack of preventive maintenance, or careless or improper operation [*40 CFR §122.41(n)(1)*].

1. Effect of an upset. An upset constitutes an affirmative defense to an action brought for noncompliance with such technology based permit effluent limitations if the requirements of Standard Provisions – Permit Compliance I.H.2 below are met. No determination made during administrative review of claims that noncompliance was caused by upset, and before an action for noncompliance, is final administrative action subject to judicial review [*40 CFR Section 122.41(n)(2)*].

2. Conditions necessary for a demonstration of upset. A Discharger who wishes to establish the affirmative defense of upset shall demonstrate, through properly signed, contemporaneous operating logs or other relevant evidence that [*40 CFR §122.41(n)(3)*]:

   a. An upset occurred and that the Discharger can identify the cause(s) of the upset [*40 CFR §122.41(n)(3)(i)*];

   b. The permitted facility was, at the time, being properly operated [*40 CFR §122.41(n)(3)(i)*];

   c. The Discharger submitted notice of the upset as required in Standard Provisions – Reporting V.E.2.b below (24-hour notice) [*40 CFR Section 122.41(n)(3)(iii)*]; and

   d. The Discharger complied with any remedial measures required under Standard Provisions – Permit Compliance I.C above [*40 CFR §122.41(n)(3)(iv)*].

3. Burden of proof. In any enforcement proceeding, the Discharger seeking to establish the occurrence of an upset has the burden of proof [*40 CFR §122.41(n)(4)*].

II. STANDARD PROVISIONS – PERMIT ACTION

A. General

This Order may be modified, revoked and reissued, or terminated for cause. The filing of a request by the Discharger for modification, revocation and reissuance, or termination, or a notification of planned changes or anticipated noncompliance does not stay any Order condition [*40 CFR §122.41(f)*].

B. Duty to Reapply

If the Discharger wishes to continue an activity regulated by this Order after the expiration date of this Order, the Discharger must apply for and obtain a new permit [*40 CFR §122.41(b)*].

C. Transfers

This Order is not transferable to any person except after notice to the Regional Water Board. The Regional Water Board may require modification or revocation and reissuance of the Order to change the name of the Discharger and incorporate such other requirements as may be necessary under the CWA and the CWC [*40 CFR §122.41(l)(3)*] [*40 CFR §122.61*].

III. STANDARD PROVISIONS – MONITORING

A. Samples and measurements taken for the purpose of monitoring shall be representative of the monitored activity [*40 CFR §122.41(j)(1)*].

B. Monitoring results must be conducted according to test procedures under 40 CFR Part 136 or, in the case of sludge use or disposal, approved under 40 CFR Part 136 unless otherwise specified in 40 CFR Part 503 unless other test procedures have been specified in this Order [*40 CFR §122.41(j)(4)*] [*40 CFR §122.44(i)(1)(iv)*].

IV. STANDARD PROVISIONS – RECORDS

A. Except for records of monitoring information required by this Order related to the Discharger's sewage sludge use and disposal activities, which shall be retained for a period of at least five years (or longer as required by 40 CFR Part 503), the Discharger shall retain records of all monitoring information, including all calibration and maintenance records and all original strip chart recordings for continuous monitoring instrumentation, copies of all reports required by this Order, and records of all data used to complete the application for this Order, for a period of at least three (3) years from the date of the sample, measurement, report or application. This period may be extended by request of the Regional Water Board Executive Officer at any time [*40 CFR §122.41(j)(2)*].

B. Records of monitoring information shall include:

1. The date, exact place, and time of sampling or measurements [*40 CFR §122.41(j)(3)(i)*];

2. The individual(s) who performed the sampling or measurements [*40 CFR §122.41(j)(3)(ii)*];

3. The date(s) analyses were performed [*40 CFR §122.41(j)(3)(iii)*];

4. The individual(s) who performed the analyses [*40 CFR §122.41(j)(3)(iv)*];

5. The analytical techniques or methods used [*40 CFR §122.41(j)(3)(v)*]; and

6. The results of such analyses [*40 CFR §122.41(j)(3)(vi)*].

C. Claims of confidentiality for the following information will be denied [*40 CFR §122.7(b)*]:

1. The name and address of any permit applicant or Discharger [*40 CFR §122.7(b)(1)*]; and

2. Permit applications and attachments, permits and effluent data [*40 CFR §122.7(b)(2)*].

V. STANDARD PROVISIONS – REPORTING

A. Duty to Provide Information

The Discharger shall furnish to the Regional Water Board, SWRCB, or USEPA within a reasonable time, any information which the Regional Water Board, SWRCB, or USEPA may request to determine whether cause exists for modifying, revoking and reissuing, or terminating this Order or to determine compliance with this Order. Upon request, the Discharger shall also furnish to the Regional Water Board, SWRCB, or USEPA copies of records required to be kept by this Order [*40 CFR §122.41(h)*] [*CWC 13267*].

B. Signatory and Certification Requirements

1. All applications, reports, or information submitted to the Regional Water Board, State Water Board, and/or USEPA shall be signed and certified in accordance with Standard Provisions – Reporting V.B.2, V.B.3, V.B.4, and V.B.5 below [*40 CFR Section 122.41(k)*].

2. All permit applications shall be signed by either a principal executive officer or ranking elected official. For purposes of this provision, a principal executive officer of a federal agency includes: (i) the chief executive officer of the agency, or (ii) a senior executive officer having responsibility for the overall operations of a principal geographic unit of the agency (e.g., Regional Administrators of USEPA) [40 CFR Section 122.22(a)(3)].

3. All reports required by this Order and other information requested by the Regional Water Board, State Water Board, or USEPA shall be signed by a person described in Standard Provisions – Reporting V.B.2 above, or by a duly authorized representative of that person. A person is a duly authorized representative only if:

   a. The authorization is made in writing by a person described in Standard Provisions – Reporting V.B.2 above [*40 CFR Section 122.22(b)(1)*];

   b. The authorization specified either an individual or a position having responsibility for the overall operation of the regulated facility or activity such as the position of plant manager, operator of a well or a well field, superintendent, position of equivalent responsibility, or an individual or position having overall responsibility for environmental matters for the company (a duly authorized representative may thus be either a named individual or any individual occupying a named position) [*40 CFR Section 122.22(b)(2)*]; and

   c. The written authorization is submitted to the Regional Water Board, State Water Board, or USEPA [*40 CFR Section 122.22(b)(3)*].

4. If an authorization under Standard Provisions – Reporting V.B.3 above is no longer accurate because a different individual or position has responsibility for the overall operation of the facility, a new authorization satisfying the requirements of Standard Provisions – Reporting V.B.3 above must be submitted to the Regional Water Board, State Water Board or USEPA prior to or together with any reports, information, or applications, to be signed by an authorized representative [40 CFR Section 122.22(c)].

5. Any person signing a document under Standard Provisions – Reporting V.B.2 or V.B.3 above shall make the following certification:

   "I certify under penalty of law that this document and all attachments were prepared under my direction or supervision in accordance with a system designed to assure that qualified personnel properly gather and evaluate the information submitted. Based on my inquiry of the person or persons who manage the system or those persons directly responsible for gathering the information, the information submitted is, to the best of my knowledge and belief, true, accurate, and complete. I am aware that there are significant penalties for submitting false information, including the possibility of fine and imprisonment for knowing violations" [*40 CFR Section 122.22(d)*].

C. Monitoring Reports

1. Monitoring results shall be reported at the intervals specified in the Monitoring and Reporting Program in this Order [*40 CFR §122.41(l)(4)*].

2. Monitoring results must be reported on a Discharge Monitoring Report (DMR) form or forms provided or specified by the Regional Water Board or SWRCB for reporting results of monitoring of sludge use or disposal practices [*40 CFR §122.41(l)(4)(i)*].

3. If the Discharger monitors any pollutant more frequently than required by this Order using test procedures approved under 40 CFR Part 136 or, in the case of sludge use or disposal, approved under 40 CFR Part 136 unless otherwise specified in 40 CFR Part 503, or as specified in this Order, the results of this monitoring shall be included in the calculation and reporting of the data submitted in the DMR or sludge reporting form specified by the Regional Water Board [*40 CFR §122.41(l)(4)(ii)*].

4. Calculations for all limitations, which require averaging of measurements, shall utilize an arithmetic mean unless otherwise specified in this Order [*40 CFR §122.41(l)(4)(iii)*].

D. Compliance Schedules

Reports of compliance or noncompliance with, or any progress reports on, interim and final requirements contained in any compliance schedule of this Order, shall be submitted no later than 14 days following each schedule date [*40 CFR §122.41(l)(5)*].

E. Twenty-Four Hour Reporting

1. The Discharger shall report any noncompliance that may endanger health or the environment. Any information shall be provided orally within 24 hours from the time the Discharger becomes aware of the circumstances. A written submission shall also be provided within five (5) days of the time the Discharger becomes aware of the circumstances. The written submission shall contain a description of the noncompliance and its cause; the period of noncompliance, including exact dates and times, and if the noncompliance has not been corrected, the anticipated time it is expected to continue; and steps taken or planned to reduce, eliminate, and prevent reoccurrence of the noncompliance [*40 CFR §122.41(l)(6)(i)*].

2. The following shall be included as information that must be reported within 24 hours under this paragraph [*40 CFR §122.41(l)(6)(ii)*]:

   a. Any unanticipated bypass that exceeds any effluent limitation in this Order [*40 CFR §122.41(l)(6)(ii)(A)*].

   b. Any upset that exceeds any effluent limitation in this Order [*40 CFR §122.41(l)(6)(ii)(B)*].

3. The Regional Water Board may waive the above-required written report under this provision on a case-by-case basis if an oral report has been received within 24 hours [*40 CFR §122.41(l)(6)(iii)*].

F. Planned Changes

The Discharger shall give notice to the Regional Water Board as soon as possible of any planned physical alterations or additions to the permitted facility. Notice is required under this provision only when [*40 CFR §122.41(l)(1)*]:

1. The alteration or addition to a permitted facility may meet one of the criteria for determining whether a facility is a new source in 40 CFR §122.29(b) [*40 CFR §122.41(l)(1)(i)*]; or

2. The alteration or addition could significantly change the nature or increase the quantity of pollutants discharged. This notification applies to pollutants which are subject neither to effluent limitations in this Order nor to notification requirements under 40 CFR Part 122.42(a)(1) (see Additional Provisions—Notification Levels VII.A.1) [*40 CFR §122.41(l)(1)(ii)*].

3. The alteration or addition results in a significant change in the Discharger's sludge use or disposal practices, and such alteration, addition, or change may justify the application of permit conditions that are different from or absent in the existing permit, including notification of additional use or disposal sites not reported during the permit application process or not reported pursuant to an approved land application plan [*40 CFR §122.41(l)(1)(iii)*].

G. Anticipated Noncompliance

The Discharger shall give advance notice to the Regional Water Board or SWRCB of any planned changes in the permitted facility or activity that may result in noncompliance with General Order requirements [*40 CFR §122.41(l)(2)].*

H. Other Noncompliance

The Discharger shall report all instances of noncompliance not reported under Standard Provisions – Reporting V.C, V.D, and V.E above at the time monitoring reports are submitted. The reports shall contain the information listed in Standard Provision – Reporting V.E above [*40 CFR Section 122.41(l)(7)*].

I. Other Information

When the Discharger becomes aware that it failed to submit any relevant facts in a permit application, or submitted incorrect information in a permit application or in any report to the Regional Water Board, SWRCB, or USEPA, the Discharger shall promptly submit such facts or information [*40 CFR §122.41(l)(8)*].

VI. STANDARD PROVISIONS – ENFORCEMENT

A. The Regional Water Board is authorized to enforce the terms of this permit under several provisions of the CWC, including, but not limited to, Sections 13385, 13386, and 13387.

VII. ADDITIONAL PROVISIONS – NOTIFICATION LEVELS

A. Publicly-Owned Treatment Works (POTWs)

All POTWs shall provide adequate notice to the Regional Water Board of the following [*40 CFR Section 122.42(b)*]:

1. Any new introduction of pollutants into the POTW from an indirect discharger that would be subject to Sections 301 or 306 of the CWA if it were directly discharging those pollutants [*40 CFR Section 122.42(b)(1)*]; and

2. Any substantial change in the volume or character of pollutants being introduced into that POTW by a source introducing pollutants into the POTW at the time of adoption of the Order [*40 CFR Section 122.42(b)(2)*].

3. Adequate notice shall include information on the quality and quantity of effluent introduced into the POTW as well as any anticipated impact of the change on the quantity or quality of effluent to be discharged from the POTW [*40 CFR Section 122.42(b)(3)*].

Attachment E – Monitoring and Reporting Program

Table of Contents

I. General Monitoring Provisions 2
II. Monitoring Locations 7
III. Influent Monitoring Requirements 8
IV. Effluent Monitoring Requirements – DP 001 and 002 9
V. Whole Effluent Toxicity Testing Requirements 11
VI. Land Discharge Monitoring Requirements – Not Applicable 13
VII. Recycled Water Monitoring Requirements – DP 003 and 004 14
VIII. Receiving Water Monitoring Requirements – Surface Water and Groundwater 14
C. Regional Monitoring for Fish Flesh Testing 15
IX. Other Monitoring Requirements 16
A. Biosolids Monitoring at B-001 16
B. Water Supply Monitoring: 16
C. Pretreatment Monitoring and Reporting: 17
X. Reporting Requirements 20
A. General Monitoring and Reporting Requirements 20
B. Self-Monitoring Reports (SMRs) 21
C. Discharge Monitoring Reports (DMRs) 23
D. Other Reports 24

ATTACHMENT E – MONITORING AND REPORTING PROGRAM (MRP)

California Water Code sections 13267 and 13383 authorize the Regional Water Board to require technical and monitoring reports. The Code of Federal Regulations (CFR) at 40 CFR 122.48 requires that all NPDES permits specify monitoring and reporting requirements. This Monitoring and Reporting Program establishes monitoring and reporting requirements that implement the state and federal regulations.

I. GENERAL MONITORING PROVISIONS

1. All sampling and sample preservation shall be in accordance with the current edition of "*Standard Methods for the Examination of Water and Wastewater*" (American Public Health Association).

2. All laboratory analyses shall be performed in accordance with test procedures under 40 CFR 136 "Guidelines Establishing Test Procedures for the Analysis of Pollutants," promulgated by the United States Environmental Protection Agency (EPA), unless otherwise specified in this MRP. In addition, the Regional Water Board and/or EPA, at their discretion, may specify test methods that are more sensitive than those specified in 40 CFR 136. (See also I.6., below).

3. Chemical, bacteriological, and bioassay analyses shall be conducted at a laboratory certified for such analyses by the California Department of Health Services in accordance with the provision of Water Code Section 13176, and must include quality assurance/quality control data with their reports, or EPA or at laboratories approved by the Regional Water Board's Executive Officer.

4. Whenever the Discharger monitors any pollutant more frequently than is required by this Order, the results of this monitoring shall be included in the calculation and reporting of the data submitted in the discharge monitoring report specified by the Executive Officer.

5. In conformance with federal regulations 40 CFR 122.45(c), analyses to determine compliance with the effluent limitations for metals shall be conducted using the total recoverable method. For Chromium (VI), the dissolved method in conformance with 40 CFR 136 may be used to measure compliance with the Chromium (VI) limitation.

6. For effluent monitoring:

   a. The Discharger shall require its testing laboratory to calibrate the analytical system down to the minimum level (ML)[1] specified in Attachment H for priority pollutants, unless an alternative minimum level is approved by the Regional Water Board's Executive Officer. When there is more than one ML value for a given substance, the discharger shall use the ML values, and their associated analytical methods listed in Attachment H that are below the effluent limitation. For analysis of priority pollutants without effluent limitations, the Discharger shall use an ML value that is below the trigger values listed in Attachment I. If no ML value is below the effluent limitation, or the trigger value listed in Attachment I, then the lowest ML and associated analytical method shall be used. Any internal quality control data associated with the sample must be reported when requested by the Executive Officer. The Regional Water Board will reject the quantified laboratory data if quality control data is unavailable or unacceptable.

   b. The discharger shall report the results of analytical determinations for the presence of chemical constituents in a sample using the following reporting protocols:

      1) Sample results greater than or equal to the reported ML shall be reported as measured by the laboratory (i.e., the measured chemical concentration in the sample).

      2) Sample results less than the reported ML, but greater than or equal to the laboratory's current Method Detection Limit (MDL)[2], shall be reported as "Detected, but Not Quantified," or "DNQ." The estimated chemical concentration of the sample shall also be reported.

      3) Sample results not detected above the laboratory's MDL shall be reported as "not detected" or "ND."

   c. The Discharger shall submit to the Regional Water Board reports necessary to determine compliance with effluent limitations in this Order and shall follow the chemical nomenclature and sequential order of priority pollutant constituents shown in Attachment G – Priority Pollutant List. The Discharger shall report with each sample result:

      1) The minimum level achieved by the testing laboratory; and

---

1 *Minimum level is the concentration at which the entire analytical system must give a recognizable signal and acceptable point. The ML is the concentration in a sample that is equivalent to the concentration of the lowest calibration standard analyzed by a specific analytical procedure, assuming that all the method specified sample weights, volumes, and processing steps have been followed.*

2 *MDL is the minimum concentration of a substance that can be measured and reported with 99 percent confidence that the analytical concentration is greater than zero, as defined in 40 CFR 136, Appendix B.*

2) The laboratory's current MDL, as determined by the procedure found in 40 CFR 136.

d. For receiving water monitoring and for those priority pollutants without effluent limitations, the Discharger shall require its testing laboratory to quantify constituent concentrations to the lowest achievable MDL as determined by the procedure found in 40 CFR 136. In situations where the most stringent applicable receiving water objective (freshwater or human health (consumption of organisms only), as specified for that pollutant in 40 CFR 131.38 is below the minimum level value specified in Attachment H and the Discharger cannot achieve an MDL value for that pollutant below the ML value, the Discharger shall submit justification why a lower MDL value cannot be achieved. Justification shall be submitted together with monthly monitoring reports.

7. The Discharger shall have, and implement an acceptable written quality assurance (QA) plan for laboratory analyses. Duplicate chemical analyses must be conducted on a minimum of ten percent (10%) of the samples, or at least one sample per month, whichever is greater. A similar frequency shall be maintained for analyzing spiked samples. When requested by the Regional Water Board or EPA, the Discharger will participate in the NPDES discharge monitoring report QA performance study.

8. Monitoring and reporting shall be in accordance with the following:

a. Samples and measurements taken for the purpose of monitoring shall be representative of the monitored activity.

b. The monitoring and reporting of influent, effluent, and sludge shall be done more frequently as necessary to maintain compliance with this Order and or as specified in this Order.

c. Whenever the Discharger monitors any pollutant more frequently than is required by this Order, the results of this monitoring shall be included in the calculation and reporting of the data submitted in the discharge monitoring report specified by the Regional Water Board's Executive Officer.

d. A "grab" sample is defined as any individual sample collected in less than 15 minutes.

e. A composite sample is defined as a combination of no fewer than eight individual grab samples obtained over the specified sampling period. The volume of each individual grab sample shall be proportional to the discharge flow rate at the time of sampling. The compositing period shall equal the specific sampling period, or 24 hours, if no period is specified.

f. Daily samples shall be collected on each day of the week.

g. Monthly samples shall be collected on any representative day of each month.

h. Quarterly samples: A representative grab sample shall be taken on any representative day of January, April, July, and October and test results shall be reported in micrograms/liter (ug/L) by the last day of the month following the month that the sample was taken.

i. Semi-annual samples shall be collected in January and July.

j. Annual samples shall be collected in accordance with the following schedule:

Table 1. Annual Sampling Schedule

Year	Annual Samples
2013	July
2014	October
2015	January
2016	April
2017	July
2018	October

9. The Discharger shall assure that records of all monitoring information are maintained and accessible for a period of at least five years (this retention period supersedes the retention period specified in Section IV.A. of Attachment D) from the date of the sample, report, or application. This period of retention shall be extended during the course of any unresolved litigation regarding this discharge or by the request of the Regional Water Board at any time. Records of monitoring information shall include:

   a. The information listed in Attachment D- IV Standard Provisions – Records, subparagraph B. of this Order;

   b. The laboratory which performed the analyses;

   c. The date(s) analyses were performed;

   d. The individual(s) who performed the analyses;

   e. The modification(s) to analytical techniques or methods used;

   f. All sampling and analytical results, including

      1) Units of measurement used;
      2) Minimum reporting level for the analysis (minimum level, practical quantitation level (PQL));
      3) Results less than the reporting level but above the method detection limit (MDL);
      4) Data qualifiers and a description of the qualifiers;
      5) Quality control test results (and a written copy of the laboratory quality assurance plan);
      6) Dilution factors, if used; and
      7) Sample matrix type.

g. All monitoring equipment calibration and maintenance records;

h. All original strip charts from continuous monitoring devices;

i. All data used to complete the application for this Order; and,

j. Copies of all reports required by this Order.

k. Electronic data and information generated by the Supervisory Control And Data Acquisition (SCADA) System.

10. The flow measurement system shall be calibrated at least once per year or more frequently, to ensure continued accuracy.

11. All monitoring instruments and devices used by the Discharger to fulfill the prescribed monitoring program shall be properly maintained and calibrated as necessary to ensure their continued accuracy. In the event that continuous monitoring equipment is out of service for greater than a 24-hour period, the Discharger shall obtain a representative grab sample each day the equipment is out of service. The Discharger shall correct the cause(s) of failure of the continuous monitoring equipment as soon as practicable. In its monitoring report, the Discharger shall specify the period(s) during which the equipment was out of service and if the problem has not been corrected, shall identify the steps which the Discharger is taking or proposes to take to bring the equipment back into service and the schedule for these actions.

II. MONITORING LOCATIONS

The Discharger shall establish the following monitoring locations to demonstrate compliance with the effluent limitations, discharge specifications, and other requirements in this Order:

Table 1. Monitoring Station Locations

Discharge Point Name	Monitoring Location Name	Monitoring Location Description	Latitude	Longitude
--	M-INFA	Combined influent monitoring and sampling station	33° 57' 52.33" N	117° 27' 13.58" W
001, 002	M-001A	Effluent to Reach 3 of Santa Ana River, close to the end of effluent pipeline	33° 57' 48.30" N	117° 27' 40.95" W
001,002	M-001B	At the end of the chlorine contact tank 3. This station is used for coliform testing.	33° 57' 42.24" N	117° 27' 40.98" W
003	REC-001	Recycled water for irrigation of Toro turf, at the end of the chlorine contact tank 3	33° 57' 42.15" N	117° 27' 41.49" W
004	REC-002	Recycled water for RPU Distribution system	33° 57' 47.24" N	117° 27' 42.18" W
--	R-001U	Receiving surface water, upstream of Santa Ana River at the Metropolitan Water District pipeline crossing.	33° 58' 4.53" N	117° 26' 52.93" W
--	R-001D	Santa Ana river, downstream of the most downstream point of discharge	33° 56' 48.27" N	117° 33' 56.15" W
--	R-002	Santa Ana River	--	--
--	B-001	Biosolids monitoring at end of dewatering	33° 57' 44.24" N	117° 27' 27.67" W

III. INFLUENT MONITORING REQUIREMENTS

1. Sampling stations shall be established for the points of inflow to the treatment plant. The sampling station(s) shall be located upstream of any in-plant return flows and where representative sample(s) of the influent of the treatment plant can be obtained.

2. The Discharger shall monitor the combined influent into the facility at M-INFas follows:

Table 2. Influent Monitoring

Parameter	Units	Sample Type	Minimum Sampling Frequency (See Section I.13., above)	Required Analytical Test Method
Flow	mgd	Recorder/ Totalizer	Continuous	--
Specific Conductance	µmhos/cm	Recorder	"	See Sections I.2. & I.3., above
pH	pH units	"	"	"
BOD_5	mg/L	24-hr Composite	Weekly	"
Suspended Solids	"	"	"	"
Ammonia-Nitrogen	"	Grab	"	"
Total Inorganic Nitrogen	"	24-hr Composite	"	"
Total Dissolved Solids	"	"	"	"
Boron	"	"	Quarterly	"
Chloride	"	"	"	"
Fluoride	"	"	"	"
Sulfate	"	"	"	"
Total Hardness	"	"	"	"
Arsenic	µg/L	"	"	See Sections I.2., I.3. & I.6.., above
Cadmium	"	"	"	"
Chromium, VI or Total Chromium	"L	"	"	"
Copper	"	"	"	"
Cyanide (Free)	"	Grab	"	"
Lead	"	24-hr Composite	"	"
Mercury	"	"	"	"
Nickel	"	"	"	"
Silver	"	"	"	"
Zinc	"	"	"	"
Volatile organic portion of EPA Priority Pollutants (See Attachment G)	"	Grab	Annually	"
Remaining EPA Priority Pollutants[8] (See Attachment G)	µg/L	24-hr Composite	"	"

[8] *Remaining EPA priority pollutants are those pollutants listed in Attachment G which are not volatile organics and pollutants not specifically listed in this monitoring program table.*

IV. EFFLUENT MONITORING REQUIREMENTS – DP 001 AND 002

1. The Discharger shall monitor the discharge at monitoring location M-001A as follows:

Table 3. Effluent Monitoring at M-001A

Parameter	Units	Sample Type	Minimum Sampling Frequency (See Section I.13., above)	Required Analytical Test Method and Reporting Level as noted herein
Flow	mgd	Recorder/ Totalizer	Continuous	---
pH	pH units	Recorder	"	See Sections I.2. & I.3., above
Specific Conductance	µmhos/cm	"	"	"
Total Chlorine Residual	mg/L	"	"	"
Turbidity	NTU[10]	Recorder/Turbidimeter	Continuous[11]	"
Ammonia-Nitrogen	mg/L	24-hr Composite	Daily	"
BOD_5	"	"	"	"
Suspended Solids	"	"	"	"
Temperature	^0C	Grab	Weekly	"
Total Dissolved Solids	mg/L	24-hr Composite	Monthly	"
Total Inorganic Nitrogen	"	"	"	"
Nitrate Nitrogen	"	"	"	"
Total Hardness	"	"	"	"
Toxicity Monitoring	TU	24-hr Composite (see Section V.A.3., below)	Monthly (see Section V.4., below)	"
Cyanide (Free)	µg/L	Grab	Monthly	See Sections I.2., I.3. & I.6., above
Chromium (VI)/ or Total Chromium	"	Grab/24-hr Composite	Quarterly	"
Mercury	"	24-hr Composite	"	"
Cadmium	"	"	"	"
Copper	"	"	"	"
Lead	"	"	"	"
Selenium	"	"	"	"
Silver	"	"	"	"
Aluminum	mg/L	"	"	"
Boron	"	"	"	See Sections I.2. & I.3., above

10 *NTU = Nephelometric Turbidity Units*

11 *Turbidity analysis shall be continuous, performed by a continuous recording turbidimeter. Compliance with the daily average operating filter effluent turbidity shall be determined by averaging the levels of recorded turbidity taken at a minimum of four-hour intervals over a 24-hour period. The results of the daily average turbidity determinations shall be reported monthly.*

5. The presence of chronic toxicity shall be estimated as specified in Short Term Methods for Estimating the Chronic Toxicity of Effluents and Receiving Waters to Freshwater Organisms. Fourth Edition. EPA-821-R-02-013.

6. Results for both survival and reproduction endpoints shall be reported in TUc, where TUc = 100/NOEC or 100/ICp or ECp (p is the percent effluent). The no observed effect concentration (NOEC) is the highest concentration of toxicant to which organisms are exposed in a chronic test, that causes no observable adverse effect on the tests organisms (e.g., the highest concentration of toxicant to which the values for the observed responses are not statistically significant different from the controls). The inhibition concentration (IC) is a point estimate of the toxicant concentration that causes a given percent reduction in a non-quantal biological measurement (e.g., reproduction or growth) calculated from a continuous model (the EPA Interpolation Method). The effective concentration (EC) is a point estimate of the toxicant concentration that would cause a given percent reduction in quantal biological measurement (e.g., larval development, survival) calculated from a continuous model (e.g., probit).

7. Additional Testing Requirements.

   a. A series of at least five dilutions and a control will be tested. Five dilutions of the series shall be within 60% to 100% effluent concentration.

   b. If organisms are not cultured in-house, concurrent testing with reference toxicants shall be conducted. Where organisms are cultured in-house, monthly reference toxicant testing is sufficient. Reference toxicants shall also be conducted using the same test conditions as the effluent toxicity test (e.g., same test duration, etc).

   c. If either of the reference toxicant test or the effluent tests do not meet all test acceptability criteria as specified in the manual[22], then the Discharger must re-sample and re-test within 14 days or as soon as the Discharger receives notification of failed tests.

   d. Control and dilution water should be receiving water or lab water. If the dilution water used is different from the culture water, a second control, using culture water shall also be used.

[22] *Refers to USEPA Manual "Short-Term Methods for Estimating the Chronic Toxicity of Effluents and Receiving Waters to Freshwater Organisms. Fourth Edition. EPA-821-R-02-013.*

8. Quality Assurance/Control:

   a. A quality assurance/quality control (QA/QC) program shall be instituted to verify the results of the effluent toxicity-monitoring program. The QA/QC program shall include but shall not be limited to the following: (1) Selection of an independent testing laboratory; (2) Approval by the Regional Board's Executive Officer or Executive Officer's designee of the independent testing laboratory; (3) Once during the year, the Discharger shall split samples with the independent laboratory for conducting chronic toxicity testing; (4) Results from the independent laboratory shall be submitted to the Regional Board and the Discharger for evaluation; (5) The Discharger shall review the test acceptability criteria in accordance with the EPA test protocols, EPA/600/4-91/002.

   b. Results from the independent laboratory of the annual QA/QC split samples are to be used for Quality Assurance/Quality Control (QA/QC) purposes only and not for purposes of determining compliance with other requirements of this Order.

9. The use of alternative methods for measuring chronic toxicity may be considered by the Executive Officer on a case–by-case basis. The use of a different test species, in lieu of conducting the required test species may be considered/approved by the Executive Officer on a case-by case basis upon submittal of the documentation supporting Discharger's determination that a different species is more sensitive and appropriate.

10. Reporting: Results of all toxicity testing conducted within the month following the reporting period shall be submitted monthly in accordance with "Short-term Methods for Estimating the Chronic Toxicity of Effluents and Receiving Waters to Freshwater Organisms", third edition, Environmental Monitoring Systems Laboratory, U.S. Environmental Protection Agency 2002, Cincinnati, Ohio (October 2002, EPA-821-R-02-013). The report shall include a determination of the median value of all chronic toxicity testing results conducted during the two previous months.

11. Whenever an Initial Investigation Reduction Evaluation is conducted, the results of the evaluation shall be submitted upon completion. In addition, monthly status reports shall be submitted as part of the Discharger's monitoring report.

VI. LAND DISCHARGE MONITORING REQUIREMENTS – Not Applicable

VII. RECYCLED WATER MONITORING REQUIREMENTS – DP 003 AND 004

The Discharger shall monitor recycled water at REC-001, and REC-002, as follows, unless samples collected at M-001A and M-001B are representative of the recycled water at DPs 003 and 004. Then, only flow and CT shall be required to be monitored at REC-001 and REC-002.

Table 5. Recycled Water Monitoring at REC-001, REC-002

Parameter	Units	Sample Type	Minimum Sampling & Testing Frequency (See Section I.13., above)	Required Analytical Test Method
Flow	mgd	Recorder/Totalizer	Continuous	---
pH	pH units	Recorder	"	"
CT	mg/L-min	"	"	"
Turbidity	NTU	"	"	"
BOD_5	mg/L	Composite	Daily	See Section I.2., above
Total Suspended Solids	"	"	"	"
Coliform Organisms	MPN per 100 mL	Grab	"	"
Total Inorganic Nitrogen	"	"	Monthly	"
TDS	"	"	"	"

VIII. RECEIVING WATER MONITORING REQUIREMENTS – SURFACE WATER AND GROUNDWATER

1. The Discharger shall make measurement of the receiving water flow at R-001U in the Santa Ana River and determine whether a 20:1 dilution exists at the point of discharge before discharging secondary treated effluent. A dilution of 20:1 or more is required at the point of discharge. Flow measurements shall be made prior to any direct discharge to the river and shall continue on a daily basis until the discharged is terminated.

2. The Discharger shall monitor the receiving water at R-001U as follows:

Table 6. Receiving Water Monitoring at R-001U

Parameter	Units	Sample Type	Minimum Sampling & Testing Frequency	Required Analytical Test Method
Dissolved Oxygen	mg/L	Grab	Weekly	See Sections I.2. & I.3., above
Temperature	^0C	"	"	"
pH	pH unit	Grab	"	"
EPA Priority Pollutants	µg/L	"	Annually	"

3. The Discharger shall monitor the receiving water at R-001D as follows:

Table 7. Receiving Water Monitoring at R-001D

Parameter	Units	Sample Type	Minimum Sampling & Testing Frequency	Required Analytical Test Method
Dissolved Oxygen	mg/L	Grab	Weekly	See Sections I.2. & I.3., above
Temperature	^0C	"	"	"
pH	pH unit	Grab	"	"
Color change, foam, deposition of material, odor	--	observe	Weekly	"

C. Regional Monitoring for Fish Flesh Testing

Unless otherwise directed by the Regional Water Board Executive Officer, the Discharger shall implement the approved plan for the annual sampling and testing of mercury levels in fish flesh samples collected from the Santa Ana River. The frequency of monitoring and submission of reports shall be as stipulated in the approved plan.

IX. OTHER MONITORING REQUIREMENTS

A. Biosolids Monitoring at B-001

1. Biosolids monitoring shall be conducted as follows:

Table 8. Biosolids Monitoring at B-001

Parameter	Units	Sample Type	Minimum Sampling & Testing Frequency
Priority Pollutants	mg/kg	A composite of six grab samples	Semi-annually
Moisture Content (% solid)	mg/kg	Grab	Quarterly

2. The Discharger shall maintain a permanent log of solids hauled away from the treatment facilities for use/disposal elsewhere, including the date hauled, the volume or weight (in dry tons), type (screening, grit, raw sludge, biosolids), application (agricultural, composting, etc), and destination. This information shall be reported semi-annually.

B. Water Supply Monitoring:

1. At least once per year, a sample of each source of the water supplied to the sewered area shall be obtained and analyzed for total dissolved solids.

2. Monthly reports shall be submitted stating the amount (in percentage or acre-feet) supplied to the sewered area from each source of water and the resulting flow-weighted water supply quality for total dissolved solids.

C. Pretreatment Monitoring and Reporting:

1. The Discharger shall submit to the Regional Water Board and the EPA Region 9, a quarterly compliance status report. The quarterly compliance status reports shall cover the periods January 1 - March 31, April 1 - June 30, July 1 - September 30, and October 1 -December 31. Each report shall be submitted by the end of the month following the quarter, except that the report for October 1 - December 31 may be included in the annual report. This quarterly reporting requirement shall commence for the first full quarter following issuance of this Order. The reports shall identify:

   a. All significant industrial users (SIUs) which violated any standards or reporting requirements during that quarter;
   b. The violations committed (distinguish between categorical and local limits);
   c. The enforcement actions undertaken; and
   d. The status of active enforcement actions from previous periods, including closeouts (facilities under previous enforcement actions which attained compliance during the quarter).

2. Annually, the Discharger shall submit a report to the Regional Water Board, the State Water Resources Control Board and the EPA Region 9 describing the pretreatment activities within the service area during the previous year. In the event that any control authority within the service area is not in compliance with any conditions or requirements of this Order or their approved pretreatment program (such as due to industrial user discharges, interjurisdictional agency agreement implementation issues, or other causes,) then the Discharger shall also include the reasons for non-compliance and state how and when the Discharger and the control authority shall comply with such conditions and requirements. This annual report shall cover operations from January 1 through December 31 of each fiscal year and is due on April 1 of each year. The report shall contain, but not be limited to, the following information:

   a. A summary of analytical results from representative, flow-proportioned, 24-hour composite sampling of the POTW's influent and effluent wastewaters for those pollutants which are known or suspected to be discharged by industrial users (IUs) as identified by EPA under Section 307(a) of the CWA. The summary will include the result of annual full priority pollutant scan, with quarterly samples analyzed only for those pollutants[24] detected in the full scan. The Discharger shall also provide any influent or effluent monitoring data for non-priority pollutants which the Discharger believes may be causing or contributing to Interference, Pass Through or adversely impacting sludge quality. Sampling and analysis shall be performed in accordance with the techniques prescribed in 40 CFR 136 and amendments thereto.

---

24 *The Discharger is not required to analyze for asbestos.*

b. A discussion of any upset, interference, or pass-through incidents at the treatment plant (if any), which the Discharger knows or suspects were caused by IUs of the POTW system. The discussion shall include the following:

   1) The reasons why the incidents occurred, the corrective actions taken, and, if known, the name and address of the IU(s) responsible.

   2) A review of the applicable pollutant limitations to determine whether any additional limitations, or changes to existing requirements, may be necessary to prevent pass through, interference or noncompliance with sludge disposal requirements.

c. A complete and updated list of the Discharger's significant industrial users (SIUs), including names, North American Industry Classification System (NAICS) and addresses, and a list of any SIU deletions and/or additions. The Discharger shall provide a brief explanation for each deletion. The SIU list shall identify the SIUs subject to Federal Categorical Standards by specifying which set(s) of standards are applicable to each SIU. The list shall also indicate which SIUs are subject to local limitations more stringent than Federal Categorical Standards and those, which are not subject to local limits.

d. A list or table characterizing the industrial compliance status of each SIU, including:

   1) SIU name;
   2) Industrial category;
   3) The type (processes) of wastewater treatment in place;
   4) Number of samples taken by the POTW during the year;
   5) Number of samples taken by the SIU during the year;
   6) Whether all needed certifications (if allowed) were provided by SIUs which have limits for total toxic organics;
   7) Federal and Regional Standards violated during the year, reported separately;
   8) Whether the SIU at any time in the year was in Significant Noncompliance (SNC)[25], as defined by 40 CFR 403.12 (f)(2)(vii); and
   9) A summary of enforcement actions against the SIU taken during the year, including the type of action, final compliance date, and amount of fines assessed/collected (if any). Proposed actions, if known, should be included.
   10) Number of inspections conducted at each SIU during the year.

e. A compliance summary table which includes:

   1) SIU's which were in SNC at any time during the year;
   2) The total number of SIUs which are in SNC with pretreatment compliance schedules during the year;

[25] *SNC is determined at the beginning of each quarter based on data of the previous six months.*

3) The total number of notices of violation and administrative orders issued against SIUs during the year;
4) The total number of civil and criminal judicial actions filed against SIUs during the year;
5) The number of SIUs which were published as being in SNC during the year; and
6) The number of IUs from which penalties were collected during the year.

f. A short description of any significant changes in operating the pretreatment program which differ from the previous year including, but not limited to changes concerning:

1) The program's administrative structure;
2) Local industrial discharge limitations;
3) Monitoring program or monitoring frequencies;
4) Legal authority or enforcement policy;
5) Funding mechanisms; and
6) Resource requirements and/or staffing levels.

g. A summary of the annual pretreatment budget, including the cost of pretreatment program functions and equipment purchases.

h. A summary of public participation activities to involve and inform the public.

i. A description of any changes in sludge disposal methods and a discussion of any concerns not described elsewhere in the report.

3. The cumulative number of industrial users that the Discharger has notified regarding Baseline Monitoring Reports and the cumulative number of industrial user responses.

4. The Discharger shall submit the quarterly compliance status reports and the annual pretreatment report to EPA Region 9, the State Board and the Regional Water Board.

D. TDS Offset Program Monitoring and Reporting:

If the discharger is offsetting exceedances of the TDS limit pursuant to Effluent Limitations IV.A.1.c of Order No. R8-2013-0016, the Discharger shall report the total salt removal accomplished pursuant to the offset program to demonstrate whether offset requirements are being met. The Discharger shall report quarterly the running balance of salt discharges compared to TDS removal. If offset in not occurring during the quarterly monitoring period, the quarterly report shall so state and identify when the offset will be achieved.

X. REPORTING REQUIREMENTS

A. General Monitoring and Reporting Requirements

1. The Discharger shall comply with all Standard Provisions (Attachment D) related to monitoring, reporting, and recordkeeping.

2. Any internal quality control data associated with the sample must be reported when requested by the Executive Officer. The Regional Water Board will reject the quantified laboratory data if quality control data is unavailable or unacceptable.

3. Discharge monitoring data shall be submitted in a format acceptable by the Regional Water Board. Specific reporting format may include preprinted forms and/or electronic media. The results of all monitoring required by this Order shall be reported to the Regional Water Board, and shall be submitted in such a format as to allow direct comparison with the limitations and requirements of this order.

4. The Discharger shall submit to the Regional Water Board reports necessary to determine compliance with effluent limitations in this Order and shall follow the chemical nomenclature and sequential order of priority pollutant constituents shown in Attachment G – Priority Pollutant Lists. The Discharger shall report with each sample result:

   a) The minimum level achieved by the testing laboratory; and
   b) The laboratory's current MDL, as determined by the procedure found in 40 CFR 136.
   c) For those priority pollutants without effluent limitations, the Discharger shall require its testing laboratory to quantify constituent concentrations to the lowest achievable MDL as determined by the procedure found in 40 CFR 136. In situations where the trigger value listed in Attachment I is below the minimum level value specified in Attachment H and the Discharger cannot achieve an MDL value for that pollutant below or equal to the ML value, the Discharger shall submit justification why a lower MDL value cannot be achieved. Justification shall be submitted together with monthly monitoring reports.

5. For every item of monitoring data where the requirements are not met, the monitoring report shall include a statement discussing the reasons for noncompliance, and of the actions undertaken or proposed which will bring the discharge into full compliance with requirements at the earliest time, and an estimate of the date when the Discharger will be in compliance. The Discharger shall notify the Regional Water Board by letter when compliance with the time schedule has been achieved.

6. The reports for June and December shall include a roster of plant personnel, including job titles, duties, and level of State certification for each individual.

7. The Discharger shall report monitoring results for specific parameters in accordance with the following table:

Table 9. Reporting Requirements

Parameter	Measurement
Flow	Daily total flow
pH	Daily high and daily low
Total Chlorine Residual	Daily Maximum
Electrical Conductivity	Daily High
Turbidity	Daily maximum

8. The Discharger shall file a written report with the Regional Board within ninety (90) days after the average dry-weather waste flow for any month equals or exceeds 75 percent of the design capacity of the waste treatment and/or disposal facilities. The Discharger's senior administrative officer shall sign a letter that which transmits that report and certifies that the policy making body is adequately informed about it. The report shall include:

   a. Average daily flow for the month, the date on which the instantaneous peak flow occurred, the rate of that peak flow, and the total flow for the day.

   b. The Discharger's best estimate of when the average daily dry-weather flow rate will equal or exceed the design capacity of the treatment facilities.

   c. The Discharger's intended schedule for studies, design, and other steps needed to provide additional capacity for the waste treatment and/or disposal facilities before the waste flow rate equals the capacity of present units.

B. Self-Monitoring Reports (SMRs)

1. The Discharger shall submit Self-Monitoring Reports (SMRs) electronically using the State Water Board's California Integrated Water Quality System (CIWQS) Program Web site (http://www.waterboards.ca.gov/ciwqs/index.html). The CIWQS Web site will provide additional directions for SMR submittal in the event there will be service interruption for electronic submittal.

2. The Discharger shall report in the SMR the results for all monitoring specified in this MRP under sections III through IX. Additionally, the Discharger shall report in the SMR the results of any special studies, acute and chronic toxicity testing, TRE/TIE, PMP, and Pollution Prevention Plan required by Special Provisions – VI.C. list of this Order. The Discharger shall submit monthly, quarterly, and annual SMRs including the results of all required monitoring using USEPA-approved test methods or other test methods specified in this Order. If the Discharger monitors any pollutant more frequently than required by this Order, the results of this monitoring shall be included in the calculations and reporting of the data submitted in the SMR.

3. Monitoring periods and reporting for all required monitoring shall be completed according to the following schedule:

Table 10. Monitoring and Reporting Schedule

Sampling Frequency	Monitoring Period Begins On	Monitoring Period	SMR Due Date[29]
Continuous	The effective date of this Order	All	Submit with monthly SMR
Daily	The effective date of this Order	(Midnight through 11:59 PM) or any 24-hour period that reasonably represents a calendar day for purposes of sampling.	Submit with monthly SMR
Weekly	The effective date of this Order	Sunday through Saturday	Submit with monthly SMR
Monthly	First day of calendar month following permit effective date or on permit date if that date is first day of the month	1st day of calendar month through last day of calendar month	First day of the second month following the reporting period, submit as monthly SMR
Quarterly	Closest of January 1, April 1, July 1, or October 1 following permit effective date	January 1 through March 31, samples are collected in January; April 1 through June 30; samples are collected in April; July 1 through September 30; samples are collected in July; October 1 through December 31; samples are collected in October	First day of the second month following the reporting period, submit with monthly SMR
Semiannually	Closest of January 1 or July 1 following permit effective date	January 1 through June 30 July 1 through December 31	First day of the second month following the reporting period, submit with monthly SMR
Annually	The effective day of this Order	1st day of calendar month through last day of calendar month (See Section I.A.13.j, above)	First day of the second month following the reporting period, submit with monthly SMR
Pretreatment Annual Report	July 1, 2013	July 1 through June 30	September 1

4. Reporting Protocols. The Discharger shall report with each sample result the applicable Minimum Level (ML) and the current Method Detection Limit (MDL), as determined by the procedure in 40 CFR Part 136.

   The Discharger shall report the results of analytical determinations for the presence of chemical constituents in a sample using the following reporting protocols:

   a. Sample results greater than or equal to the ML shall be reported as measured by the laboratory (i.e., the measured chemical concentration in the sample).

   b. Sample results less than the ML, but greater than or equal to the laboratory's MDL, shall be reported as "Detected, but Not Quantified," or DNQ. The estimated chemical concentration[30] of the sample shall also be reported.

29 *Should the due date fall on a weekend or holiday, the due date shall be extended to the next work day.*

30 *See definition in Attachment A*

For the purposes of data collection, the laboratory shall write the estimated chemical concentration next to DNQ as well as the words "Estimated Concentration" (may be shortened to "Est. Conc."). The laboratory may, if such information is available, include numerical estimates of the data quality for the reported result. Numerical estimates of data quality may be percent accuracy (± a percentage of the reported value), numerical ranges (low to high), or any other means considered appropriate by the laboratory.

c. Sample results less than the laboratory's MDL shall be reported as "Not Detected," or ND.

d. Dischargers are to instruct laboratories to establish calibration standards so that the ML value (or its equivalent if there is differential treatment of samples relative to calibration standards) is the lowest calibration standard. At no time is the Discharger to use analytical data derived from extrapolation beyond the lowest point of the calibration curve.

5. The Discharger shall attach a cover letter to the SMR. The information contained in the cover letter shall clearly identify violations of the WDRs; discuss corrective actions taken or planned; and the proposed time schedule for corrective actions. Identified violations must include a description of the requirement that was violated and a description of the violation.

C. Discharge Monitoring Reports (DMRs)

1. At any time during the term of this permit, the State or Regional Water Board may notify the Discharger to electronically submit SMRs that will satisfy federal requirements for submittal of Discharge Monitoring Reports (DMRs). Until such notification is given, the Discharger shall submit DMRs in accordance with the requirements described below.

2. DMRs must be signed and certified as required by the standard provisions (Attachment D). The Discharger shall submit the original DMR and one copy of the DMR to the address listed below:

Standard Mail	FedEx/UPS/ Other Private Carriers
State Water Resources Control Board Division of Water Quality c/o DMR Processing Center PO Box 100 Sacramento, CA 95812-1000	State Water Resources Control Board Division of Water Quality c/o DMR Processing Center 1001 I Street, 15th Floor Sacramento, CA 95814

3. All discharge-monitoring results must be reported on the official USEPA pre-printed DMR forms (EPA Form 3320-1). Forms that are self-generated or modified cannot be accepted.

D. Other Reports

The Discharger shall report the results of any special studies, acute and chronic toxicity testing, TRE/TIE, PMP, and Pollution Prevention Plan required by Special Provisions – VI.C. of this Order. The Discharger shall submit reports with the first monthly SMR scheduled to be submitted on or immediately following the report due date in compliance with SMR reporting requirements described in subsection X.B.3 above.

ATTACHMENT F – FACT SHEET

Table of Contents

I. Discharger/Facility Information 3
II. Facility Description 4
A. Wastewater and Biosolids Treatment or Controls 4
B. Discharge Points and Receiving Waters 5
1. Discharge Points 5
2. Receiving Waters 6
C. Compliance Summary 6
III. Applicable Plans, Policies, and Regulations 6
A. Legal Authorities 6
B. California Environmental Quality Act (CEQA) 6
C. State and Federal Regulations, Policies, and Plans 7
D. Impaired Water Bodies on CWA 303(d) List 9
IV. Rationale For Effluent Limitations and Discharge Specifications for Surface Water Discharges 10
A. Discharge Prohibitions 10
B. Technology-Based Effluent Limitations 10
1. Scope and Authority 10
2. Applicable Technology-Based Effluent Limitations 11
C. Water Quality-Based Effluent Limitations (WQBELs) 12
1. Scope and Authority 12
2. Applicable Beneficial Uses and Water Quality Criteria and Objectives 13
3. Determining the Need for WQBELs 15
4. WQBEL Calculations 16
5. Whole Effluent Toxicity (WET) 16
D. Summary of Effluent Limitations 16
1. Satisfaction of Anti-Backsliding Requirements 16
2. Satisfaction of Antidegradation Policy 16
3. Stringency of Requirements for Individual Pollutants 17
4. Summary of Water Quality Based Effluent Limitations 17
V. Rationale For Recycled Water Specifications 18
VI. Rationale for Receiving Water Limitations 18
A. Surface Water 18
B. Groundwater 18
VII. Rationale for Monitoring and Reporting Requirements 19
A. Influent Monitoring 19
B. Effluent Monitoring 19
C. Whole Effluent Toxicity Testing Requirements 19
D. Receiving Water Monitoring 20
1. Surface Water 20
2. Groundwater – Not Applicable 20
E. Other Monitoring Requirements 20

VIII. Rationale for Provisions 21
A. Standard Provisions 21
B. Special Provisions 21
1. Reopener Provisions 21
2. Special Studies and Additional Monitoring Requirements 22
3. Best Management Practices and Pollution Prevention 22
4. Construction, Operation, and Maintenance Specifications 22
5. Special Provisions for Municipal Facilities (POTWs Only) 22
IX. Public Participation 23
A. Notification of Interested Parties 23
B. Written Comments 23
C. Public Hearing 23
D. Waste Discharge Requirements Petitions 24
E. Information and Copying 24
F. Register of Interested Persons 24
G. Additional Information 24

ATTACHMENT F – FACT SHEET

As described in Section II of this Order, this Fact Sheet includes the legal requirements and technical rationale that serve as the basis for the requirements of this Order.

This Order has been prepared under a standardized format to accommodate a broad range of discharge requirements for dischargers in California. Only those sections or subsections of this Order that are specifically identified as "not applicable" have been determined not to apply to this Discharger. Sections or subsections of this Order not specifically identified as "not applicable" are fully applicable to this Discharger.

I. DISCHARGER/FACILITY INFORMATION

The following table summarizes administrative information related to the facility.

Table 1. Discharger/Facility Information

WDID	8 330117003
Discharger	City of Riverside, Department of Public Works
Discharger Legally Responsible Officer	Tom Boyd, Public Works Director (951)826-5575
Mailing Address	3900 Main St., Riverside, CA 92522
Name of Facility	Riverside Regional Water Quality Control Plant, City of Riverside
Facility Address	5950 Acorn Street, Riverside, CA 92504
Facility Contacts	Gary Valladao, Wastewater Systems Manager, (951) 351-6140 Edward Filadelfia, Regulatory Affairs & Compliance, (951) 351- 6080 Kevin Street, Regulatory Programs and Compliance Manager, (951) 351- 6007
Billing Address	Same as Facility Address
Type of Facility	Publicly Owned Treatment Works (POTW)
Major or Minor Facility	Major
Threat to Water Quality	1
Complexity	A
Pretreatment Program	Y
Reclamation Requirements	Y
Facility Design Flow	46 mgd
Facility Permitted Flow	46 mgd

The City of Riverside, Department of Public Works (hereinafter Discharger) is the owner and operator of the Riverside Regional Water Quality Control Plant (hereinafter RRWQCP or Facility), a publicly owned wastewater treatment plant that produces tertiary treatment water.

The Facility discharges wastewater to Reach 3 of the Santa Ana River, a water of the United States, and is currently regulated by Order No. R8-2006-0009, which was adopted on April 21, 2006 and expired on April 21, 2011. The Discharger filed a report of waste discharge and submitted an application for renewal of its Waste Discharge Requirements (WDRs) and National Pollutant Discharge Elimination System (NPDES) permit on September 27, 2010. Since the Discharger submitted a timely application for renewal of the Order, the terms and conditions of Order R8-2006-0009 have been automatically continued and remain in effect until new Waste Discharge Requirements and NPDES permit are adopted pursuant to this Order.

II. FACILITY DESCRIPTION

A. Wastewater and Biosolids Treatment or Controls

The RRWQCP is a municipal wastewater treatment plant located on a 121-acre site at 5950 Acorn Street in the City of Riverside, south of the Santa Ana River near the intersection of Van Buren Boulevard. The RRWQCP discharges tertiary treated wastewater to Reach 3 of the Santa Ana River.

The RRWQCP treats wastewater from the City of Riverside and from Edgemont Community Services District, Jurupa Community Services District, and Rubidoux Community Services District. The RRWQCP serves a population of 303,871.

The RRWQCP is currently designed to tertiary treat 46 million gallons per day (mgd) of wastewater. The annual average daily flow discharged from this plant in 2012 was approximately 29 mgd.

The RRWQCP consists of two secondary treatment plants (Plants 1 and 2), one tertiary treatment plant that treats the flow from both Plants 1 and 2, and solids handling facilities that treat the biosolids produced from wastewater treatment. Preliminary treatment consists of fine bar screens and vortex grit removal. Secondary treatment consists of primary sedimentations basins, alum and/or polymer injection, aeration basins (11 basins), membrane bioreactors (8 MBRs will be installed by the end of 2015), and secondary sedimentation (4 clarifiers). Tertiary treatment consists of equalization basins, dual media filtration (16 filters), chlorine contact basins (3 basins) where chlorination by sodium hypochlorite, and dechlorination by sodium bisulfite occur. Solids handling includes dissolved air flotation (DAF) thickeners, anaerobic digestion (4 digesters), dewatering (2 belt presses and 2 centrifuges).

Tertiary treated wastewater is discharged from Discharge Points 001 and 002 to Reach 3 of the Santa Ana River, which is a water of the United States. When at least 20:1 dilution is provided by natural flows in the receiving water, the Discharger is authorized to discharge secondary treated wastewater to the Santa Ana River.

Currently, about 0.3 mgd of the tertiary treated and disinfected wastewater is recycled for irrigation by users near the RRWQCP. The City has determined that Riverside Public Utilities (RPU) is the appropriate agency for distribution of recycled water and has recently been issued a Master Reclamation Permit (Order No. R8-2013-0028) to that end. Existing Riverside Public Works customers will transfer to the RPU permit. Riverside Public Utilities is currently in the process of expanding its recycled water distribution system. As discussed in RPU's March 2011 Recycled Water Facility Plan, recycled water is expected to be used for irrigation and non-irrigation uses, such as for construction, commercial/industrial (including cooling), habitat development and maintenance, and recreational uses. RPU may convey recycled water to neighboring agencies, pending specific agreements and other permitting.

On-site storm water is collected and piped to the influent of Plant 1 aeration basins.

Attachment B provides a location map of the Facility. Attachment C provides a flow schematic of the Facility treatment systems.

B. Discharge Points and Receiving Waters

1. Discharge Points

RRWQCP discharges tertiary treated wastewater to the Santa Ana River, Reach 3 at two discharge points designated Discharge Point (DP) 001 and 002. Wastewater from the Facility is discharged at DP 001 into an earthen channel that merges with the SAR. Within the next five years RRWQCP may commingle up to 2 MGD with Hole lake effluent at DP 002. Recycled water is delivered to a nearby user at DP 003. Recycled water is also discharged into the RPU main recycled water distribution system at DP 004, where the water will be delivered to various users under Order No. R8-2013-0028.

Table 2. Summary of Discharge Points

Discharge Point	Latitude	Longitude	Description
001	33° 57' 55"N	117° 27' 28"W	Treated wastewater discharged directly to Reach 3 of the Santa Ana River
002	33° 57' 44"N	117° 29' 7"W	Treated wastewater commingled with Hole Lake effluent and then to Reach 3 of the Santa Ana River
003	33° 57' 47"N	117° 27' 41"W	Recycled water for irrigation of Toro turf.
004	33° 57' 43"N	117° 27' 42"W	Recycled water for Riverside Public Utilities distribution system

2. Receiving Waters

a. Surface Waters: Treated wastewater from the Facility is discharged into Reach 3 of the Santa Ana River.

b. Groundwater: The discharger plans to distribute recycled water throughout the City of Riverside. The recycled water use areas overlie a number of Groundwater Management Zones.

C. Compliance Summary

Based on a review of effluent monitoring data submitted by the Discharger, the wastewater discharged from the Facility was generally in compliance with the effluent limitations specified in the current waste discharge requirements.

III. APPLICABLE PLANS, POLICIES, AND REGULATIONS

The requirements contained in the proposed Order are based on the requirements and authorities described in this section.

A. Legal Authorities

This Order is issued pursuant to Chapter 5.5, Division 7 of the California Water Code (commencing with Section 13370) and section 402 of the federal Clean Water Act (CWA) and implementing regulations adopted by the U.S. Environmental Protection Agency (USEPA). This Order also serves as Waste Discharge Requirements (WDRs) pursuant to Article 4, Chapter 4, Division 7 of the Water Code (commencing with Section 13260). This Order shall also serve as an NPDES permit for point source discharges from this Facility to surface waters.

B. California Environmental Quality Act (CEQA)

Under Water Code Section 13389, this action to adopt waste discharge requirements that serve as an NPDES permit is exempt from the provisions of CEQA, Public Resources Code section 21000 et seq. (County of Los Angeles v. California State Water Resources Control Board (2006) 143 Cal.App.4th 985, mod. (Nov. 6, 2006, B184034) 50 Cal.Rptr.3d 619, 632-636.)

C. State and Federal Regulations, Policies, and Plans

1. **Water Quality Control Plans.** The Regional Water Board adopted a Water Quality Control Plan for the Santa Ana Basin (hereinafter Basin Plan) on January 24, 1995. The Basin Plan designates beneficial uses, establishes water quality objectives, and contains implementation programs and policies to achieve those objectives for all waters addressed through the plan. In addition, State Water Resources Control Board (State Water Board) Resolution No. 88-63 (Sources of Drinking Water Policy) requires that, with certain exceptions, the Regional Water Board assign the municipal and domestic water supply use to water bodies. Based on the exception criteria specified in Resolution No. 88-63, the Regional Board excepted Reach 3 of the Santa Ana River and downstream reaches from the municipal and domestic supply beneficial use.

   On January 22, 2004, the Regional Water Board adopted Resolution No. R8-2004-0001, amending the Basin Plan to incorporate revised boundaries for groundwater subbasins, now termed "management zones", new nitrate-nitrogen and TDS objectives for the new management zones, and new nitrogen and TDS management strategies applicable to both surface and groundwaters. The State Water Resources Control Board and Office of Administrative Law (OAL) approved the N/TDS Amendment on September 30, 2004 and December 23, 2004, respectively. The surface water standards components of the N/TDS Amendment were approved by the EPA on June 20, 2007. Effluent limitations for TDS and TIN in this Order are based on applicable surface water components of the N/TDS Amendment (i.e., N and TDS wasteload allocations) and are at least as stringent as the limits in the prior Order.

   As previously discussed, the Facility discharges into Reach 3 of the Santa Ana River. Also, recycled water from the Facility will be used over several groundwater management zones. The beneficial uses of these affected waterbodies are as follows:

Table 3 - Basin Plan Beneficial Uses

Discharge Point	Receiving Water Name	Beneficial Use(s)
001 and 002	Reach 3 of Santa Ana River	Present or Potential: Agricultural supply, groundwater recharge, water contact recreation, non-contact water recreation, warm freshwater habitat, wildlife habitat, and rare, threatened or endangered species.
001, 002, and 003	Chino-South Groundwater Management Zone	Present or Potential: Municipal and domestic supply, agricultural supply, industrial service supply, and industrial process supply.
004	Chino-South; Arlington; Riverside-A, D, E, and F; and Temescal Groundwater Management Zones	Present or Potential: Municipal and domestic supply, agricultural supply, industrial service supply, and industrial process supply.

The requirements of this Order implement the Basin Plan.

2. **National Toxics Rule (NTR) and California Toxics Rule (CTR).** USEPA adopted the NTR on December 22, 1992, and later amended it on May 4, 1995 and November 9, 1999. About forty criteria in the NTR applied in California. On May 18, 2000, USEPA adopted the CTR, which incorporated the NTR criteria that were applicable in California. The CTR was amended on February 13, 2001. The NTR and CTR contain water quality criteria for priority pollutants.

3. **State Implementation Policy.** On March 2, 2000, the State Water Board adopted the *Policy for Implementation of Toxics Standards for Inland Surface Waters, Enclosed Bays, and Estuaries of California* (State Implementation Policy or SIP). The SIP became effective on April 28, 2000 with respect to the priority pollutant criteria promulgated for California by the USEPA through the NTR and to the priority pollutant objectives established by the Regional Water Board in the Basin Plan. The SIP became effective on May 18, 2000 with respect to the priority pollutant criteria promulgated by the USEPA through the CTR. . The State Water Board adopted amendments to the SIP on February 24, 2005 that became effective on July 13, 2005. The SIP establishes implementation provisions for priority pollutant criteria and objectives and provisions for chronic toxicity control. Requirements of this Order implement the SIP.

4. **Alaska Rule.** On March 30, 2000, USEPA revised its regulation that specifies when new and revised State and Tribal water quality standards (WQS) become effective for CWA purposes (40 CFR 131.21, 65 FR 24641, April 27, 2000). Under the revised regulation (also known as the Alaska Rule), new and revised standards submitted to USEPA after May 30, 2000, must be approved by USEPA before being used for CWA purposes. The final rule also provides that standards already in effect and submitted to USEPA by May 30, 2000, may be used for CWA purposes, whether or not approved by USEPA.

5. **Antidegradation Policy.** Section 131.12 of 40 CFR requires that State water quality standards include an antidegradation policy consistent with the federal policy. The State Water Board established California's antidegradation policy in State Water Board Resolution 68-16, which incorporates the requirements of the federal antidegradation policy. Resolution 68-16 requires that existing water quality is maintained unless degradation is justified based on specific findings. As discussed in this Fact Sheet, the permitted discharge is consistent with the antidegradation provision of 40 CFR §131.12 and State Water Board Resolution 68-16.

   All effluent limitations in this Order are at least as stringent as those in prior waste discharge requirements for the Facility. Based on data currently available, discharges in compliance with the terms and conditions of this Order should not result in a lowering of water quality and are therefore consistent with antidegradation provisions.

6. **Anti-Backsliding Requirements.** Sections 402(o)(2) and 303(d)(4) of the CWA and 40 CFR §122.44(l) prohibit backsliding in NPDES permits. These anti-backsliding provisions require that effluent limitations in a reissued permit must be as stringent as those in the previous permit, with some exceptions in which limitations may be relaxed. All effluent limitations in the Order are at least as stringent as the effluent limitations in the previous Order.

7. **Monitoring and Reporting Requirements.** Section 122.48 of 40 CFR requires that all NPDES permits specify requirements for recording and reporting monitoring results. Sections 13267 and 13383 of the CWC authorizes the Regional Water Board to require technical and monitoring reports. The Monitoring and Reporting Program (MRP) establishes monitoring and reporting requirements to implement federal and State requirements. This MRP is provided in Attachment E.

8. **Pretreatment.** This Order contains requirements for the implementation of an effective pretreatment program pursuant to Section 307 of the Federal Clean Water Act; 40 CFR, Parts 35 and 403; and/or Section 2233, Title 23, California Code of Regulations. The Discharger has established an approved regional pretreatment program. The approved pretreatment program and its components, such as Ordinance No. 2330, local limits (adopted by the Discharger in April 18, 1985), and control mechanisms, among others, are an enforceable condition of this Order.

9. **Biosolids.** On February 19, 1993, the USEPA issued a final rule for the use and disposal of sewage sludge, 40 CFR, Part 503. This rule requires that producers of sewage sludge meet certain reporting, handling, and disposal requirements. The State of California has not been delegated the authority to implement this program, therefore, the USEPA is the implementing agency. However, this Order includes Biosolids monitoring requirements.

D. Impaired Water Bodies on CWA 303(d) List

Reach 3 of the Santa Ana River is included in the USEPA approved 2010 CWA 303(d) list due to pathogen indicators, resulting principally from dairy operations inputs during storm events. This Order requires that the wastewater discharged from the Facility be essentially free of pathogens/pathogen indicators for surface water discharges.

Reach 3 of the Santa Ana River is also included in the USEPA approved 2010 CWA 303(d) list for copper and lead. As noted below, discharges of copper and lead from the Facility do not pose a reasonable potential to cause or contribute to an exceedance of water quality objectives for these constituents.

IV. RATIONALE FOR EFFLUENT LIMITATIONS AND DISCHARGE SPECIFICATIONS FOR SURFACE WATER DISCHARGES

The CWA requires point source discharges to control the amount of conventional, non-conventional, and toxic pollutants that are discharged into the waters of the United States. The control of pollutants discharged is established through effluent limitations and other requirements in NPDES permits. There are two principal bases for effluent limitations; 40 CFR 122.44(a) requires that permits include applicable technology-based limitations and standards, and 40 CFR 122.44(d) requires that permits include water quality-based effluent limitations to attain and maintain applicable numeric and narrative water quality criteria to protect the beneficial uses of the receiving water.

A. Discharge Prohibitions

The discharge prohibitions are based on the Federal Clean Water Act, Basin Plan, State Water Resources Control Board's plans and policies, U.S. Environmental Protection Agency guidance and regulations, and previous waste discharge requirements, Order No. R8-2006-0009 and are consistent with the requirements set for other discharges regulated by waste discharge requirements adopted by the Regional Water Board.

B. Technology-Based Effluent Limitations

1. Scope and Authority

Section 301(b) of the CWA and implementing USEPA permit regulations at 40 CFR 122.44 require that permits include conditions meeting applicable technology-based requirements at a minimum, and any more stringent effluent limitations necessary to meet applicable water quality standards. The discharge authorized by this Order must meet minimum federal technology-based requirements based on Secondary Treatment Standards at 40 CFR Part 133 and/or Best Professional Judgment (BPJ) in accordance with 40 CFR 125.3.

Regulations promulgated in 40 CFR §125.3(a)(1) require technology-based effluent limitations for municipal Dischargers to be placed in waste discharge requirements based on Secondary Treatment Standards or Equivalent to Secondary Treatment Standards.

The Federal Water Pollution Control Act Amendments of 1972 (PL 92-500) established the minimum performance requirements for POTWs [defined in Section 304(d)(1)]. Section 301(b)(1)(B) of that Act requires that such treatment works must, as a minimum, meet effluent limitations based on secondary treatment as defined by the USEPA Administrator. Based on this statutory requirement, USEPA developed secondary treatment regulations, which are specified in 40 CFR Part 133. These technology-based regulations apply to all municipal wastewater treatment plants and identify the minimum level of effluent quality attainable by secondary treatment in terms of biochemical oxygen demand (BOD_5), total suspended solids (TSS), and pH.

2. Applicable Technology-Based Effluent Limitations

This facility meets the technology-based regulations for the minimum level of effluent quality attainable by secondary treatment in terms of BOD_5, total suspended solids and removal rate as summarized in Table 4, below. These effluent limitations have been carried over from the previous Order for secondary treated wastewater discharge under conditions of 20:1 dilution provided by natural flow in the river.

Table 4. Summary of Technology-based Effluent Limitations under 20:1 Dilution

Constituent	Average Weekly (mg/L)	Average Monthly (mg/L)	Average Monthly Removal Rate %
Biochemical Oxygen Demand, 5-day 20^{0}C	45	30	85
Total Suspended Solids	45	30	85

As noted in section V.C.2.c., below, tertiary treatment is required to protect beneficial uses of the Santa Ana River when 20:1 dilution conditions are not present. During these conditions, the technology-based limits, which are based on BPJ for levels achievable with tertiary treatment, are summarized in the Table below are applicable.

Table 5. Summary of Technology-Based Effluent Limits for Tertiary Treatment

Constituent	Average Weekly (mg/L)	Average Monthly (mg/L)	Average Monthly Removal Rate %
Biochemical Oxygen Demand, 5-day 20^{0}C	30	20	85
Total Suspended Solids	30	20	85

C. Water Quality-Based Effluent Limitations (WQBELs)

1. Scope and Authority

Section 301(b) of the CWA and 40 CFR 122.44(d) require that permits include limitations more stringent than applicable federal technology-based requirements where necessary to achieve applicable water quality standards.

40 CFR 122.44(d)(1)(i) mandates that permits include effluent limitations for all pollutants that are or may be discharged at levels that have a reasonable potential to cause or contribute to an exceedance of a water quality standard, including numeric and narrative objectives within a standard. Where reasonable potential has been established for a pollutant, but there is no numeric criterion or objective for the pollutant, water quality-based effluent limitations (WQBELs) must be established using: (1) USEPA criteria guidance under CWA section 304(a), supplemented where necessary by other relevant information; (2) an indicator parameter for the pollutant of concern; or (3) a calculated numeric water quality criterion, such as a proposed state criterion or policy interpreting the state's narrative criterion, supplemented with other relevant information, as provided in 40 CFR 122.44(d)(1)(vi).

The process for determining reasonable potential and calculating WQBELs when necessary is intended to protect the designated uses of the receiving water as specified in the Basin Plan, and achieve applicable water quality objectives and criteria that are contained in other state plans and policies, or any applicable water quality criteria contained in the CTR and NTR.

2. Applicable Beneficial Uses and Water Quality Criteria and Objectives

a. The Basin Plan

Table 3, above, lists the beneficial uses of the Santa Ana River, Reach 3. The Basin Plan specifies narrative and numeric water quality objectives for all inland surface waters, including the Santa Ana River. Some of those that applicable to these receiving waters are listed in the following table.

Table 6 Examples of Basin Plan Water Quality Objectives

Constituents	Basis for Limitations
Ammonia Nitrogen	Ammonia dissociates under certain conditions to the toxic un-ionized form. Thus ammonia discharges to the Santa Ana River pose a threat to aquatic life and instream beneficial uses, as well as to the beneficial uses of affected groundwater. The Basin Plan specifies un-ionized ammonia objectives and total ammonia nitrogen effluent limitations for discharges to the Santa Ana River. The total ammonia nitrogen effluent limit for discharges to the Santa Ana River, Reach 3, is 5.0 mg/L.
Hydrogen Ion (pH)	Hydrogen Ion (pH) is a measure of Hydrogen Ion concentration in the water. Extreme pH levels can have adverse effects on aquatic biota and can corrode pipes and concrete. The Basin Plan specifies that the pH in inland surface waters shall not be depressed below 6.5, nor raised above 8.5 as a result of controllable water quality factors.
Total Chlorine Residual	Chlorine and its reaction products are toxic to aquatic life. To protect aquatic life, the Basin Plan specifies that for wastewater discharged into inland surface waters, the chlorine residual should not exceed 0.1 mg/L
Total Dissolved Solids	TDS discharges to the Santa Ana River pose a threat to the beneficial uses of affected groundwater. The TDS limit for surface water discharges is based on the Basin Plan wasteload allocation of 650 mg/L at 46 mgd flow.
Total Inorganic Nitrogen	Nitrogen discharges to the Santa Ana River pose a threat to the beneficial uses of affected groundwater. The TIN limit for surface water discharges is based on the Basin Plan wasteload allocation of 10 mg/L at 46 mgd flow.

This Order also includes a TDS limit based on the quality of the water supplied to the service area plus a reasonable use increment for TDS of 250 mg/L. This reasonable use increment is discussed and authorized in the Basin Plan. The more restrictive of the TDS wasteload allocation-based limit or the TDS limit based on water quality plus a reasonable use increment applies to discharges from the facility.

In accordance with 40 CFR Section 122.45(d), there may be instances in which the basis for a limit for a particular continuous discharge may be impracticable to be stated as a maximum daily, average weekly, or average monthly effluent limitation. The Regional Water Board has determined that it is not practicable to express TDS and TIN effluent limitations as average weekly and average monthly effluent limitations because the TDS and TIN objectives in the Basin Plan were established primarily to protect the underlying groundwater. Consequently, a 12-month average period is believed to be more appropriate.

b. NTR, CTR and SIP

The National Toxics Rule, California Toxics Rule (CTR) and State Implementation Policy specify numeric objectives for toxic substances and the procedures whereby these objectives are to be implemented. The procedures include those used to conduct reasonable potential analysis to determine the need for effluent limitations for priority and non-priority pollutants.

c. Requirement to meet Title 22, Tertiary Treatment

Article 3, Section 60305 of Title 22, Chapter 3, "Use of Recycled water for impoundments" of the California Code of Regulations specifies that recycled water used as a source of supply in a nonrestricted recreational impoundment shall be at all times an adequately disinfected, oxidized, coagulated, clarified, filtered wastewater (tertiary treated). The degree of treatment specified represents an approximately 5-log reduction in the virus content of the water. The California State Department of Health Services (CDHS) has determined that this degree of virus removal is necessary to protect the health of people using these impoundments for water contact recreation. The CDHS has developed wastewater disinfection guidelines ("Wastewater Disinfection for Health Protection", Department of Health Services, Sanitary Engineering Branch, February 1987) for discharges of wastewater to surface waters where water contact recreation (REC-1) is a beneficial use. The disinfection guidelines recommend the same treatment requirements for wastewater discharges to REC-1 waters as those stipulated in Title 22 for supply of recycled water to nonrestricted recreational impoundments, since the public health risks under both scenarios are analogous. The disinfection guidelines are based on sound science and are widely used as guidance to assure public health and beneficial use protection.

Santa Ana River, Reach 3 is not a "nonrestricted recreational impoundment," nor is "recycled water[1]" being used as a supply source for the River pursuant to the definitions in Title 22. However, except during major storms, most of the flow in the River is composed of treated municipal wastewater discharges. The River is used for water contact recreation and, accordingly, is designated REC-1 (water contact beneficial use). People recreating in the River face an exposure similar to those coming in contact with recycled water in an impoundment. Therefore, to protect the water contact recreation beneficial use and to prevent nuisance and health risk, it is necessary and appropriate to require the same degree of treatment for wastewater discharges to the River as would be required for the use of recycled water in a nonrestricted recreational impoundment. Thus, this Order specifies requirements based on tertiary or equivalent treatment.

The Regional Water Board has consulted with the CDPH regarding the applicability of the process design standards (specifically filter rates, CT, and modal contact) for discharges of waste to flowing streams. CDPH has determined that although compliance with these standards is necessary to protect public health when recycled water is used, compliance with these standards is not necessary to protect public health for discharges into waterbodies that provide dilution of the wastewater, provided the performance standards are consistently met. During periods when the receiving water can provide a 1:1 dilution of the wastewater discharge, the Order provides that the specified filter rates, CT, and modal contact time do not apply to wastewater discharges to surface water. The specified filter rates, CT, and modal contact time applies to recycled water use.

3. Determining the Need for WQBELs

In accordance with Section 1.3 of the SIP, the Regional Water Board conducted a reasonable potential analysis (RPA) for each priority pollutant with an applicable criterion or objective to determine if a WQBEL is required in the Order. The Regional Water Board analyzed effluent data to determine if a pollutant in a discharge has the reasonable potential to cause or contribute to an excursion above a state water quality standard. For all parameters that have the reasonable potential to cause or contribute to an excursion above a water quality standard, numeric WQBELs are required. The RPA considers criteria from the CTR, and when applicable, water quality objectives specified in the Basin Plan.

Sufficient data are needed to conduct a complete RPA. If data are not sufficient, the Discharger will be required to gather the appropriate data for the Regional Water Board to conduct the RPA. Upon review of the data, and if the Regional Water Board determines that WQBELs are needed to protect the beneficial uses, the permit will be reopened for appropriate modification.

---

1 *As defined in the Reclamation Criteria, recycled water means water which, as a result of treatment of domestic wastewater, is suitable for a direct beneficial use or a controlled use that would not otherwise occur.*

The RPA was performed for the priority pollutants for which effluent data were available. Cyanide was determined to have a reasonable potential to exceed water quality objectives. Consequently, effluent limitations for that constituent are included in this Order. Table 7 is a summary of the RPA evaluation for cyanide using monitoring data submitted by the Discharger.

Table 7 RPA Evaluation

Parameter	Unit	Effluent	CTR		Is Effluent Limit Required?	
		MEC	CMC	CCC	CMC	CCC
Cyanide	µg/L	6.0	22	5.2	No	Yes

4. WQBEL Calculations

For priority pollutants, water quality based effluent limits are based on monitoring results and the calculation process outlined in Section 1.4 of the California Toxic Rule and the Policy for Implementation of Toxics Standards for Inland Surface Waters, Enclosed Bays and Estuaries of California. The calculation of the WQBEL for Cyanide is summarized in the following table:

Table 8 – Cyanide Effluent limit Calculation

					CV = 0.6			Aquatic		Human		Permit Limit	
	Caltoxics				Acute M	Chronic M	LTA	Objective/limits		Health Limits		Concentration Limit	
	Freshwater		Human Health		0.321	0.527		3.11	1.55	2.01			
Constituent	CMC	CCC	H2O+Org	Org only	Acute LTA	Chronic LTA		MDEL	AMEL	MDEL	AMEL	MDEL	AMEL
Cyanide	22.00	5.20			7.06	2.74	2.74	8.52	4.25			8.5	4.2

5. Whole Effluent Toxicity (WET)

This Order does not specify WET limits but requires continued chronic toxicity monitoring. Effluent monitoring data indicated that the two month median value of 1.0 TU_C for the survival or reproduction endpoint has never been exceeded.

D. Summary of Effluent Limitations

1. Satisfaction of Anti-Backsliding Requirements

All effluent limitations in this Order are at least as stringent as the effluent limitations in the previous Order.

2. Satisfaction of Antidegradation Policy

Discharges in conformance with the requirements of this Order will not result in a lowering of water quality and therefore conform to antidegradation requirements specified in Resolution No. 68-16, which incorporates the federal antidegradation policy at 40 CFR 131.12.

3. Stringency of Requirements for Individual Pollutants

Water quality-based effluent limitations have been scientifically derived to implement water quality objectives that protect beneficial uses. Both the beneficial uses and the water quality objectives have been approved pursuant to federal law and are the applicable federal water quality standards. To the extent that toxic pollutant water quality-based effluent limitations were derived from the CTR, the CTR is the applicable standard pursuant to 40 CFR131.38. The scientific procedures for calculating the individual water quality-based effluent limitations for priority pollutants are based on the CTR-SIP, which was approved by USEPA on May 18, 2000. Apart from certain surface water standards changes resulting from the N/TDS Basin Plan amendment that do not materially affect the quality requirements for the discharges regulated by this Order, all beneficial uses and water quality objectives contained in the Basin Plan were approved under state law and submitted to and approved by USEPA prior to May 30, 2000. Any water quality objectives and beneficial uses submitted to USEPA prior to May 30, 2000, but not approved by USEPA before that date, are nonetheless "applicable water quality standards for purposes of the CWA" pursuant to 40 CFR 131.21(c)(1). Collectively, this Order's restrictions on individual pollutants are no more stringent than required to implement the requirements of the CWA.

4. Summary of Water Quality Based Effluent Limitations

Table 9 Summary of Water Quality-based Effluent Limitations

Parameter	Units	Effluent Limitations					Basis
		Average Monthly or as noted herein	Average Weekly	Max Daily	Instantaneous Minimum	Instantaneous Maximum	
Ammonia-Nitrogen	mg/L	5.0					BP
pH	Std. unit	--	--	--	6.5	8.5	BP
TDS	mg/L	650 (12-M avg)					BP
TIN	mg/L	10 (12-M avg)					BP
Total Residual Chlorine	mg/L	--	--		--	0.1	BP
Cyanide	µg/L	4.2		8.5			CTR, SIP
Coliform	MPN/ 100mL		2.2				Title 22

Notes: BP= Basin Plan, Title 22= Section 60305, Article 3, Chapter 3, Title 22 of the California Code of Regulations

V. RATIONALE FOR RECYCLED WATER SPECIFICATIONS

1. Section 13523 of the California Water Code provides that a Regional Water Board, after consulting with and receiving the recommendations from the CDHS and any party who has requested in writing to be consulted, and after any necessary hearing, shall prescribe water reclamation requirements for water which is used or proposed to be used as recycled water, if, in the judgment of the Board, such requirements are necessary to protect the public health, safety, or welfare. Section 13523 further provides that such requirements shall include, or be in conformance with, the statewide uniform water recycling criteria established by the CDHS pursuant to California Water Code Section 13521.

2. Reclamation specifications in the Order are based on the recycling criteria contained in Title 22, Division 4, Chapter 3, Sections 60301 through 60355, California Code of Regulations and the California Water Code Section 13521.

3. Summary of Reclamation Effluent Limitations:

Table 10 Summary of Recycled Water Limitations

Parameter	Units	Effluent Limitations					Basis
		Average Monthly	Average Weekly	Maximum Daily	Instantaneous Minimum	Instantaneous Maximum	
BOD_5	mg/L	20	30	--	--	--	BPJ
Total Suspended Solids	mg/L	20	30	--	--	--	BPJ
TDS	mg/L	650					BP
CT	milligram-minutes per liter	--	--	--	450	--	Title 22
Coliform	MPN/100 mL	--	2.2 median in 7 days	--	--	--	Title 22
Turbidity	NTU	--	--	2 avg.		--	Title 22

Notes: BP= Basin Plan, Title 22= Section 60305, Article 3, Chapter 3, Title 22 of the California Code of Regulations

VI. RATIONALE FOR RECEIVING WATER LIMITATIONS

A. Surface Water

The surface water receiving water limitations in the Order are based upon the water quality objectives contained in the Basin Plan.

B. Groundwater

The groundwater water receiving water limitations in the Order are based upon the water quality objectives contained in the Basin Plan.

VII. RATIONALE FOR MONITORING AND REPORTING REQUIREMENTS

Sections 13267 and 13383 of the CWC authorize the Regional Water Boards to require technical and monitoring reports. 40 CFR 122.48 also requires all NPDES permits to specify recording and reporting of monitoring results. The Monitoring and Reporting Program (MRP), Attachment E of this Order, establishes monitoring and reporting requirements to implement federal and State requirements. The following provides the rationale for the monitoring and reporting requirements contained in the MRP for this facility.

A. Influent Monitoring

This Order carries forward the treatment plant influent monitoring requirements specified in the previous Order without change. Influent monitoring is required to help determine the effectiveness of the pretreatment program and assess treatment plant performance.

B. Effluent Monitoring

The Discharger is required to conduct monitoring of the permitted discharges in order to evaluate compliance with permit conditions. Pollutants to be monitored include all pollutants for which effluent limitations are specified. Further, in accordance with Section 1.3 of the SIP, periodic monitoring is required for all priority pollutants defined by the CTR, for which criteria apply and for which no effluent limitations have been established, to evaluate reasonable potential to cause or contribute to an excursion above a water quality standard.

This Order requires the Discharger to conduct a priority pollutant scan once annually. This Order also requires the Discharger to conduct accelerated monitoring for those constituents that are detected in the annual priority pollutant scan.

C. Whole Effluent Toxicity Testing Requirements

Whole effluent toxicity (WET) is an indicator of the toxic effects of the aggregate mixture of pollutants in the effluent on receiving waters. The WET approach allows for protection of the narrative "no toxics in toxic amounts" criterion while implementing numeric criteria for toxicity. There are two types of WET tests: acute and chronic. An acute toxicity test is conducted over shorter time period and measures mortality. A chronic toxicity test is conducted over a longer period of time and may measure mortality, reproduction, and growth.

The Basin Plan specifies a narrative objective for toxicity, requiring that all waters be maintained free of toxic substances in concentrations that are lethal to or produce other detrimental response on aquatic organisms. Detrimental response includes but is not limited to decreased growth rate, decreased reproductive success of resident or indicator species, and/or significant alterations in population, community ecology, or receiving water biota.

In addition to the Basin Plan requirements, Section 4 of the SIP states that a chronic toxicity effluent limitation is required in permits for all discharges that will cause, have the reasonable potential to cause, or contribute to chronic toxicity in receiving waters. Therefore, in accordance with the SIP, this Order requires the Discharger to conduct chronic toxicity testing. In addition, the Order establishes thresholds that when exceeded requires the Discharger to conduct accelerated toxicity testing and/or conduct toxicity identification evaluation (TIE) studies.

This Order requires the Discharger to conduct chronic toxicity testing of the effluent on a monthly basis. The Order also requires the Discharger to conduct an Initial Investigation Toxicity Reduction Evaluation (IITRE) program when either the two-month median of toxicity test results exceeds 1 TUc or any single test exceeds 1.7 TUc for survival endpoint. Based on the results of this investigation program and at the discretion of the Executive Officer, a more rigorous Toxicity Reduction Evaluation/Toxicity Identification Evaluation (TRE/TIE) may be required. A re-opener provision is included in the Order to incorporate a chronic toxicity effluent limitation if warranted by the toxicity test results.

D. Receiving Water Monitoring

1. Surface Water

a. For discharges of secondary treated and disinfected effluent when 20:1 or more dilution is provided by the Santa Ana River at the point of discharge, the Order requires the Discharger to establish a sampling station(s) at a suitable location(s) where the flow[2] in the River at the point of discharge can be determined. The Order also requires that flow measurements in the river are made prior to any direct discharge to the river and shall continue on a daily basis until the discharge is terminated.

b. Receiving water monitoring is required to determine compliance with receiving water limitations and to characterize the water quality of the receiving water. Requirements are based on the Basin Plan.

2. Groundwater – Not Applicable

E. Other Monitoring Requirements

1. **Water Supply Monitoring** - The Discharger will be required to collect a sample of each source of water supplied and analyze for total dissolved solids. The result of this monitoring will enable the discharger to show compliance with TDS incremental limitation in the Order.

2. **Biosolids Monitoring** - This Order continues the monitoring requirements specified in Order No. R8-2006-0009, with minor modification.

---

2 *Exclusive of discharges to surface waters from upstream publicly owned treatment works.*

3. **Pretreatment Monitoring** - These monitoring and reporting requirements are established pursuant EPA 40 CFR 403 regulations.

VIII. RATIONALE FOR PROVISIONS

A. Standard Provisions

Standard Provisions, which apply to all NPDES permits in accordance with 40 CFR 122.41, and additional conditions applicable to specified categories of permits in accordance with 40 CFR 122.42, are provided in Attachment D.

Title 40 CFR Section 122.41(a)(1) and (b) through (n) establish conditions that apply to all state-issued NPDES permits. These conditions must be incorporated into the permits either expressly or by reference. If incorporated by reference, a specific citation to the regulations must be included in the Order. 40 CFR Section 123.25(a)(12) allows the State to omit or modify conditions to impose more stringent requirements. In accordance with Section 123.25, this Order omits federal conditions that address enforcement authority specified in 40 CFR Sections 122.41(j)(5) and (k)(2) because the enforcement authority under the CWC is more stringent. In lieu of these conditions, this Order incorporates by reference CWC section 13387(e).

This Order also contains Standard Provisions that the Regional Water Board incorporates into NPDES permits in addition to the federal Standard Provisions included in Attachment D. One of these is a requirement that the Facility be protected from inundation or washout due to floods with a 100-year return frequency. Past studies showed that the levee that separates the Facility from the Santa Ana River provided such protection. However, a recent reevaluation of the levee indicates that it does not provide the necessary protection. The Discharger proposes to construct a floodwall on top of the existing levee to provide sufficient hydraulic protection for a 100-year flood event. The Discharger proposes to complete construction by August 1, 2017 and achieve full compliance by September 1, 2017. This Order requires compliance with the subject provision by September 1, 2017 and requires the submittal of semiannual progress reports until compliance is achieved.

B. Special Provisions

1. Reopener Provisions

The reopener provision is based on 40 CFR Part 123. The Regional Water Board may reopen the permit to modify permit conditions and requirements. Causes for modifications include the promulgation of new regulations, modification in sludge use or disposal practices, or adoption of new regulations by the State Board or Regional Water Board, including revisions to the Basin Plan.

2. Special Studies and Additional Monitoring Requirements

a. This Order requires the Discharger to submit a report that details the manner in which sampling, monitoring and reporting will be performed as required in the Order. This is a standard requirement for all POTW dischargers within the Region.

b. This Order requires the Discharger to develop procedures to conduct Toxicity Identification and Reduction Evaluations. This provision is based on the SIP, Section 4, Toxicity Control Provisions.

3. Best Management Practices and Pollution Prevention

The requirements are based on the Policy for Implementation of Toxics Standards for Inland Surface Waters, Enclosed Bays, and Estuaries of California, Section 2.4.5.1. and are applicable to POTW facilities including the Discharger.

4. Construction, Operation, and Maintenance Specifications

The requirements are based on requirements that were specified in the prior Order and industry standards.

5. Special Provisions for Municipal Facilities (POTWs Only)

a. Sewer Collection System Requirements: The State Water Board issued General Waste Discharge Requirements for Sanitary Sewer Systems, Order No. 2006-0003-DWQ on May 2, 2006. The General Order requires public agencies that own or operate sanitary sewer systems with greater than one mile of pipes or sewer lines to enroll for coverage under the General Order. The General Order requires agencies to develop sanitary sewer management plans (SSMPs) and report all sanitary sewer overflows (SSOs), among other requirements and prohibitions.

   Furthermore, the General Order contains requirements for operation and maintenance of collection systems and for reporting and mitigating sanitary sewer overflows. Inasmuch that the Discharger's collection system is part of the system that is subject to this Order, certain standard provisions are applicable as specified in Provisions, section VI.C.5. For instance, the 24-hour reporting requirements in this Order are not included in the General Order. The Discharger must comply with both the General Order and this Order. The Discharger and public agencies that are discharging wastewater into the facility were required to obtain enrollment for regulation under the General Order.

b. Biosolids Disposal Requirements: On February 19, 1993, the USEPA issued a final rule for the use and disposal of sewage sludge, 40 CFR, Part 503. This rule requires that producers of sewage sludge meet certain reporting, handling, and disposal requirements. The State of California has not been delegated the authority to implement this program, therefore, the U.S. Environmental Protection Agency is the implementing agency.

c. Pretreatment Requirements: The treatment plant capacity is 46 mgd and there are significant industrial users within the service areas. Consequently, this Order contains requirements for the implementation of an effective pretreatment program pursuant to Section 307 of the Federal Clean Water Act; Parts 35 and 403 of Title 40, Code of Federal Regulations (40 CFR 35 and 40 CFR 403); and/or Section 2233, Title 23, California Code of Regulations.

IX. PUBLIC PARTICIPATION

The California Regional Water Quality Control Board, Santa Ana Region (Regional Water Board) is considering the issuance of waste discharge requirements (WDRs) that will serve as a National Pollutant Discharge Elimination System (NPDES) permit for the Riverside Regional Water Quality Control Plant. As a step in the WDR adoption process, the Regional Water Board staff has developed tentative WDRs. The Regional Water Board encourages public participation in the WDR adoption process.

A. Notification of Interested Parties

The Regional Water Board has notified the Discharger and interested agencies and persons of its intent to prescribe waste discharge requirements for the discharges and has provided them with an opportunity to submit their written comments and recommendations. Notification was provided through the posting of a Notice of Public Hearing in the area of the discharge, in the local newspaper, and at the Regional Water Board website.

B. Written Comments

The staff determinations are tentative. Interested persons are invited to submit written comments concerning these tentative WDRs. Comments should be submitted either in person or by mail to the Executive Office at the Regional Water Board at the address above on the cover page of this Order.

To be fully responded to by staff and considered by the Regional Water Board, written comments should be received at the Regional Water Board offices by 5:00 p.m. on October 4, 2013.

C. Public Hearing

The Regional Water Board will hold a public hearing on the tentative WDRs during its regular Board meeting on the following date and time and at the following location:

Date:	November 1, 2013
Time:	9:00 A.M.
Location:	Irvine Ranch Water District 15600 Sand Canyon Avenue Irvine, CA

Interested persons are invited to attend. At the public hearing, the Regional Water Board will hear testimony, if any, pertinent to the discharge, WDRs, and permit. Oral testimony will be heard; however, for accuracy of the record, important testimony should be in writing.

Please be aware that dates and venues may change. Our web address http://www.waterboards.ca.gov/santaana where you can access the current agenda for changes in dates and locations.

D. Waste Discharge Requirements Petitions

Any aggrieved person may petition the State Water Resources Control Board to review the decision of the Regional Water Board regarding the final WDRs. The petition must be submitted within 30 days of the Regional Water Board's action to the following address:

State Water Resources Control Board
Office of Chief Counsel
P.O. Box 100, 1001 I Street
Sacramento, CA 95812-0100

E. Information and Copying

The Report of Waste Discharge (RWD), related documents, tentative effluent limitations and special provisions, comments received, and other information are on file and may be inspected at the address above at any time between 9:00 a.m. and 3:00 p.m. Monday through Friday. Copying of documents may be arranged through the Regional Water Board by calling (951) 782-4130.

F. Register of Interested Persons

Any person interested in being placed on the mailing list for information regarding the WDRs and NPDES permit should contact the Regional Water Board, reference this facility, and provide a name, address, and phone number.

G. Additional Information

Requests for additional information or questions regarding this Order should be directed to Najah N. Amin at (951) 320-6362

ATTACHMENT G - EPA PRIORITY POLLUTANT LIST

EPA PRIORITY POLLUTANT LIST					
Metals		**Acid Extractibles**		**Base/Neutral Extractibles (continuation)**	
1.	Antimony	45.	2-Chlorophenol	91.	Hexachloroethane
2.	Arsenic	46.	2,4-Dichlorophenol	92.	Indeno (1,2,3-cd) Pyrene
3.	Beryllium	47.	2,4-Dimethylphenol	93.	Isophorone
4.	Cadmium	48.	2-Methyl-4,6-Dinitrophenol	94.	Naphthalene
5a.	Chromium (III)	49.	2,4-Dinitrophenol	95.	Nitrobenzene
5b.	Chromium (VI)	50.	2-Nitrophenol	96.	N-Nitrosodimethylamine
6.	Copper	51.	4-Nitrophenol	97.	N-Nitrosodi-N-Propylamine
7.	Lead	52.	3-Methyl-4-Chlorophenol	98.	N-Nitrosodiphenylamine
8.	Mercury	53.	Pentachlorophenol	99.	Phenanthrene
9.	Nickel	54.	Phenol	100.	Pyrene
10.	Selenium	55.	2, 4, 6 – Trichlorophenol	101.	1,2,4-Trichlorobenzene
11.	Silver		**Base/Neutral Extractibles**		**Pesticides**
12.	Thallium	56.	Acenaphthene	102.	Aldrin
13.	Zinc	57.	Acenaphthylene	103.	Alpha BHC
	Miscellaneous	58.	Anthracene	104.	Beta BHC
14.	Cyanide	59.	Benzidine	105.	Delta BHC
15.	Asbestos (not required unless requested)	60.	Benzo (a) Anthracene	106.	Gamma BHC
16.	2,3,7,8-Tetrachlorodibenzo-P-Dioxin (TCDD)	61.	Benzo (a) Pyrene	107.	Chlordane
	Volatile Organics	62.	Benzo (b) Fluoranthene	108.	4, 4' - DDT
17.	Acrolein	63.	Benzo (g,h,i) Perylene	109.	4, 4' - DDE
18.	Acrylonitrile	64.	Benzo (k) Fluoranthene	110.	4, 4' - DDD
19.	Benzene	65.	Bis (2-Chloroethoxy) Methane	111.	Dieldrin
20.	Bromoform	66.	Bis (2-Chloroethyl) Ether	112.	Alpha Endosulfan
21.	Carbon Tetrachloride	67.	Bis (2-Chloroisopropyl) Ether	113.	Beta Endosulfan
22.	Chlorobenzene	68.	Bis (2-Ethylhexyl) Phthalate	114.	Endosulfan Sulfate
23.	Chlorodibromomethane	69.	4-Bromophenyl Phenyl Ether	115.	Endrin
24.	Chloroethane	70.	Butylbenzyl Phthalate	116.	Endrin Aldehyde
25.	2-Chloroethyl Vinyl Ether	71.	2-Chloronaphthalene	117.	Heptachlor
26.	Chloroform	72.	4-Chlorophenyl Phenyl Ether	118.	Heptachlor Epoxide
27.	Dichlorobromomethane	73.	Chrysene	119.	PCB 1016
28.	1,1-Dichloroethane	74.	Dibenzo (a,h) Anthracene	120.	PCB 1221
29.	1,2-Dichloroethane	75.	1,2-Dichlorobenzene	121.	PCB 1232
30.	1,1-Dichloroethylene	76.	1,3-Dichlorobenzene	122.	PCB 1242
31.	1,2-Dichloropropane	77.	1,4-Dichlorobenzene	123.	PCB 1248
32.	1,3-Dichloropropylene	78.	3,3'-Dichlorobenzidine	124.	PCB 1254
33.	Ethylbenzene	79.	Diethyl Phthalate	125.	PCB 1260
34.	Methyl Bromide	80.	Dimethyl Phthalate	126.	Toxaphene
35.	Methyl Chloride	81.	Di-n-Butyl Phthalate		
36.	Methylene Chloride	82.	2,4-Dinitrotoluene		
37.	1,1,2,2-Tetrachloroethane	83.	2-6-Dinitrotoluene		
38.	Tetrachloroethylene	84.	Di-n-Octyl Phthalate		
39.	Toluene	85.	1,2-Dipenylhydrazine		
40.	1,2-Trans-Dichloroethylene	86.	Fluoranthene		
41.	1,1,1-Trichloroethane	87.	Fluorene		
42.	1,1,2-Trichloroethane	88.	Hexachlorobenzene		
43.	Trichloroethylene	89.	Hexachlorobutadiene		
44.	Vinyl Chloride	90.	Hexachlorocyclopentadiene		

ATTACHMENT H – MINIMUM LEVELS

MINIMUM LEVELS IN PPB (µg/L)

Table 1- VOLATILE SUBSTANCES[1]	GC	GCMS
Acrolein	2.0	5
Acrylonitrile	2.0	2
Benzene	0.5	2
Bromoform	0.5	2
Carbon Tetrachloride	0.5	2
Chlorobenzene	0.5	2
Chlorodibromomethane	0.5	2
Chloroethane	0.5	2
Chloroform	0.5	2
Dichlorobromomethane	0.5	2
1,1 Dichloroethane	0.5	1
1,2 Dichloroethane	0.5	2
1,1 Dichloroethylene	0.5	2
1,2 Dichloropropane	0.5	1
1,3 Dichloropropylene (volatile)	0.5	2
Ethylbenzene	0.5	2
Methyl Bromide (*Bromomethane*)	1.0	2
Methyl Chloride (*Chloromethane*)	0.5	2
Methylene Chloride (*Dichloromethane*)	0.5	2
1,1,2,2 Tetrachloroethane	0.5	1
Tetrachloroethylene	0.5	2
Toluene	0.5	2
trans-1,2 Dichloroethylene	0.5	1
1,1,1 Trichloroethane	0.5	2
1,1,2 Trichloroethane	0.5	2
Trichloroethylene	0.5	2
Vinyl Chloride	0.5	2
1,2 Dichlorobenzene (volatile)	0.5	2
1,3 Dichlorobenzene (volatile)	0.5	2
1,4 Dichlorobenzene (volatile)	0.5	2

Selection and Use of Appropriate ML Value:

ML Selection: When there is more than one ML value for a given substance, the discharger may select any one of those ML values, and their associated analytical methods, listed in this Attachment that are below the calculated effluent limitation for compliance determination. If no ML value is below the effluent limitation, then the discharger shall select the lowest ML value, and its associated analytical method, listed in the PQL Table.

ML Usage: The ML value in this Attachment represents the lowest quantifiable concentration in a sample based on the proper application of all method-based analytical procedures and the absence of any matrix interferences. Assuming that all method-specific analytical steps are followed, the ML value will also represent, after the appropriate application of method-specific factors, the lowest standard in the calibration curve for that specific analytical technique. Common analytical practices sometimes require different treatment of the sample relative to calibration standards.
Note: chemical names in parenthesis and italicized is another name for the constituent.

[1] *The normal method-specific factor for these substances is 1, therefore, the lowest standard concentration in the calibration curve is equal to the above ML value for each substance.*

MINIMUM LEVELS IN PPB (µg/L)

Table 2 – Semi-Volatile Substances[2]	GC	GCMS	LC
2-Chloroethyl vinyl ether	1	1	
2 Chlorophenol	2	5	
2,4 Dichlorophenol	1	5	
2,4 Dimethylphenol	1	2	
4,6 Dinitro-2-methylphenol	10	5	
2,4 Dinitrophenol	5	5	
2- Nitrophenol		10	
4- Nitrophenol	5	10	
4 Chloro-3-methylphenol	5	1	
2,4,6 Trichlorophenol	10	10	
Acenaphthene	1	1	0.5
Acenaphthylene		10	0.2
Anthracene		10	2
Benzidine		5	
Benzo (a) Anthracene (*1,2 Benzanthracene*)	10	5	
Benzo(a) pyrene (*3,4 Benzopyrene*)		10	2
Benzo (b) Flouranthene (*3,4 Benzofluoranthene*)		10	10
Benzo(g,h,i)perylene		5	0.1
Benzo(k)fluoranthene		10	2
bis 2-(1-Chloroethoxyl) methane		5	
bis(2-chloroethyl) ether	10	1	
bis(2-Chloroisopropyl) ether	10	2	
bis(2-Ethylhexyl) phthalate	10	5	
4-Bromophenyl phenyl ether	10	5	
Butyl benzyl phthalate	10	10	
2-Chloronaphthalene		10	
4-Chlorophenyl phenyl ether		5	
Chrysene		10	5
Dibenzo(a,h)-anthracene		10	0.1
1,2 Dichlorobenzene (semivolatile)	2	2	
1,3 Dichlorobenzene (semivolatile)	2	1	
1,4 Dichlorobenzene (semivolatile)	2	1	
3,3' Dichlorobenzidine		5	
Diethyl phthalate	10	2	
Dimethyl phthalate	10	2	
di-n-Butyl phthalate		10	
2,4 Dinitrotoluene	10	5	
2,6 Dinitrotoluene		5	
di-n-Octyl phthalate		10	
1,2 Diphenylhydrazine		1	
Fluoranthene	10	1	0.05
Fluorene		10	0.1
Hexachloro-cyclopentadiene	5	5	
1,2,4 Trichlorobenzene	1	5	

MINIMUM LEVELS IN PPB (µg/L)

Table 2 - SEMI-VOLATILE SUBSTANCES[2]	GC	GCMS	LC	COLOR
Pentachlorophenol	1	5		
Phenol [3]	1	1		50
Hexachlorobenzene	5	1		
Hexachlorobutadiene	5	1		
Hexachloroethane	5	1		
Indeno(1,2,3,cd)-pyrene		10	0.05	
Isophorone	10	1		
Naphthalene	10	1	0.2	
Nitrobenzene	10	1		
N-Nitroso-dimethyl amine	10	5		
N-Nitroso -di n-propyl amine	10	5		
N-Nitroso diphenyl amine	10	1		
Phenanthrene		5	0.05	
Pyrene		10	0.05	

Table 3– INORGANICS[4]	FAA	GFAA	ICP	ICPMS	SPGFAA	HYDRIDE	CVAA	COLOR	DCP
Antimony	10	5	50	0.5	5	0.5			1000
Arsenic		2	10	2	2	1		20	1000
Beryllium	20	0.5	2	0.5	1				1000
Cadmium	10	0.5	10	0.25	0.5				1000
Chromium (total)	50	2	10	0.5	1				1000
Chromium VI	5							10	
Copper	25	5	10	0.5	2				1000
Lead	20	5	5	0.5	2				10000
Mercury				0.5			0.2		
Nickel	50	5	20	1	5				1000
Selenium		5	10	2	5	1			1000
Silver	10	1	10	0.25	2				1000
Thallium	10	2	10	1	5				1000
Zinc	20		20	1	10				1000
Cyanide								5	

2 *With the exception of phenol by colorimetric technique, the normal method-specific factor for these substances is 1000, therefore, the lowest standards concentration in the calibration curve is equal to the above ML value for each substance multiplied by 1000.*

3 *Phenol by colorimetric technique has a factor of 1.*

4 *The normal method-specific factor for these substances is 1, therefore, the lowest standard concentration in the calibration curve is equal to the above ML value for each substance.*

MINIMUM LEVELS IN PPB (µg/L)

Table 4- PESTICIDES – PCBs[5]	GC
Aldrin	0.005
alpha–BHC (*a-Hexachloro-cyclohexane*)	0.01
beta–BHC (*b-Hexachloro-cyclohexane*)	0.005
Gamma–BHC (*Lindane; g-Hexachloro-cyclohexane*)	0.02
Delta-BHC (*d-Hexachloro-cyclohexane*)	0.005
Chlordane	0.1
4,4'-DDT	0.01
4,4'-DDE	0.05
4,4'-DDD	0.05
Dieldrin	0.01
Alpha-Endosulfan	0.02
Beta-Endosulfan	0.01
Endosulfan Sulfate	0.05
Endrin	0.01
Endrin Aldehyde	0.01
Heptachlor	0.01
Heptachlor Epoxide	0.01
PCB 1016	0.5
PCB 1221	0.5
PCB 1232	0.5
PCB 1242	0.5
PCB 1248	0.5
PCB 1254	0.5
PCB 1260	0.5
Toxaphene	0.5

Techniques:
GC - Gas Chromatography
GCMS - Gas Chromatography/Mass Spectrometry
HRGCMS - High Resolution Gas Chromatography/Mass Spectrometry (i.e., EPA 1613, 1624, or 1625)
LC - High Pressure Liquid Chromatography
FAA - Flame Atomic Absorption
GFAA - Graphite Furnace Atomic Absorption
HYDRIDE - Gaseous Hydride Atomic Absorption
CVAA - Cold Vapor Atomic Absorption
ICP - Inductively Coupled Plasma
ICPMS - Inductively Coupled Plasma/Mass Spectrometry
SPGFAA - Stabilized Platform Graphite Furnace Atomic Absorption (i.e., EPA 200.9)
DCP - Direct Current Plasma
COLOR – Colorimetric

5 *The normal method-specific factor for these substances is 100, therefore, the lowest standard concentration in the calibration curve is equal to the above ML value for each substance multiplied by 100.*

ATTACHMENT I – TRIGGERS FOR QUARTERLY MONITORING OF PRIORITY POLLUTANTS

The values shown in the table below are fifty percent of the most stringent applicable receiving water objectives (freshwater or human health (consumption of organisms only) as specified for that pollutant in 40 CFR 131.38[6]). For hardness dependent metals, the hardness value used is 272 mg/L and for pentachlorophenol, the pH value used is 7.5 standard units.

	CONSTITUENT	µg/L
1	Antimony	7
2	Arsenic	75
3	Beryllium	--
4	Cadmium	3.7
5a	Chromium III	120
5b	Chromium VI	5.5
6	Copper	14.2
7	Lead	12.2
8	Mercury	0.026
9	Nickel	30
10	Selenium	2.5
11	Silver	11.2
12	Thallium	2.8
13	Zinc	70
14	Cyanide	2.6
15	Asbestos	--
16	2,3,7,8-TCDD (Dioxin)	0.000000007
17	Acrolein	160
18	Acrylonitrile	0.03
19	Benzene	0.6
20	Bromoform	2.2
21	Carbon Tetrachloride	0.13
22	Chlorobenzene	340
23	Chlorodibromomethane	0.22
24	Chloroethane	--
25	2-Chloroethyl vinyl ether	--
26	Chloroform	--
27	Dichlorobromomethane	0.28
28	***1,1-Dichloroethane***	***5***
29	1,2-Dichloroethane	0.19
30	1,1-Dichloroethylene	0.029
31	1,2-Dichloropropane	0.26
32	1,3-Dichloropropylene	5
33	***Ethylbenzene***	***0.3***
34	Methyl Bromide	24
35	Methyl Chloride	--
36	Methylene Chloride	2.4
37	1,1,2,2-Tetratchloroethane	0.085

	CONSTITUENT	µg/L
38	Tetratchloroethylene	0.4
39	***Toluene***	***0.15***
40	***1,2,-Trans-dichloroethylene***	***10***
41	***1,1,1-Trichloroethane***	***200***
42	1,1,2-Trichloroethane	0.3
43	Trichloroethylene	1.35
44	***Vinyl Chloride***	***0.5***
45	2-Chlorophenol	60
46	2,4-Dichlorophenol	46.5
47	2,4-Dimethylphenol	270
48	2-Methy-4,6-Dinitrophenol	6.7
49	2,4-Dinitrophenol	35
50	2-Nitrophenol	--
51	4-Nitrophenol	--
52	3-Methyl-4-Chlorophenol	--
53	Pentachlorophenol	0.14
54	Phenol	10500
55	2,4,6-Trichlorophenol	1.05
56	Acenapthene	600
57	Acenapthylene	--
58	Anthracene	4800
59	Benzidine	0.00006
60	Benzo (a) anthracene	0.0022
61	Benzo (a) pyrene	0.0022
62	Benzo (b) fluoranthene	0.0022
63	Benzo (g,h,i) pyrylene	--
64	Benzo (k) fluorantene	0.0022
65	Bis (2-Chloroethoxy) methane	--
66	Bis (2-Chloroethyl) ether	0.016
67	Bis (2-Chloroisopropyl) ether	700
68	Bis (2-ethyhexyl) phthalate	0.9
69	4-Bromophenyl phenyl ether	--
70	Butyl benzyl phthalate	1500
71	2- Chloronapthalene	850
72	4-Chlrorphenyl phenyl ether	--
73	Chrysene	0.0022
74	Dibenzo (a,h) anthracene	0.0022
75	***1,2-Dichlorobenzene***	***0.6***

See notes below for italicized constituents.

6 *See Federal Register/ Vol. 65, No. 97 / Thursday, May 18, 2000 / Rules and Regulations*

ATTACHMENT I. -Continued

	CONSTITUENT	µg/L
76	1,3-Dichlorobenzene	200
77	***1,4-Dichlorobenzene***	***5***
78	3,3-Dichlorobenzidine	0.02
79	Diethyl phthalate	11,500
80	Dimethyl phthalate	156,500
81	Di-N-butyl phthalate	1,350
82	2,4-Dinitrotoluene	0.055
83	2,6-Dinitrotoluene	--
84	Di-N-octyl phthalate	--
85	1,2-Diphenylhydrazine	0.02
86	Fluoranthene	150
87	Fluorene	650
88	Hexachlorobenzene	0.00038
89	Hexachlorobutadiene	0.22
90	***Hexachlorocyclopentadiene***	***50***
91	Hexachloroethane	0.95
92	Indeno (1,2,3-cd) pyrene	0.0022
93	Isophorone	4.2
94	***Naphthalene***	***17***
95	Nitrobenzene	8.5
96	N-Nitrosodimethylamine	0.00035
97	N-Nitrosodi-N-propylamine	0.0025
98	N-Nitrosodiphenylamine	2.5
99	Phenantrene	--

	CONSTITUENT	µg/L
100	Pyrene	480
101	***1,2,4 -Trichlorobenzene***	***5***
102	Aldrin	0.00007
103	BHC Alpha	0.0020
104	BHC Beta	0.007
105	BHC Gamma	0.010
106	BHC Delta	--
107	Chlordane	0.00029
108	4,4-DDT	0.0003
109	4,4-DDE	0.0003
110	4,4-DDD	0.00042
111	Dieldrin	0.00007
112	Endosulfan Alpha	0.028
113	Endosulfan Beta	0.028
114	Endosulfan Sulfate	55
115	Endrin	0.018
116	Endrin Aldehyde	0.38
117	Heptachlor	0.00011
118	Heptachlor Epoxide	0.00005
119	PCB 1016	0.000085
120	PCB 1221	0.000085
125	PCB 1260	0.000085
126	Toxaphene	0.00037

Notes:

1. For constituents not shown italicized, the values shown in the Table are fifty percent of the most stringent applicable receiving water objectives (freshwater or human health (consumption of water and organisms) as specified for that pollutant in 40 CFR 131.38[7]).
2. For constituents shown bold and italicized, the values shown in the Table are based on the California Department of Health Services maximum contaminant levels (MCLs) or Notification Level. Notification Level based trigger is underlined.
3. For hardness dependent metals, the hardness value used is 120 mg/L and for pentachlorophenol, the pH value used is 7.5 standard units.

[7] *See Federal Register/ Vol. 65, No. 97 / Thursday, May 18, 2000 / Rules and Regulations.*