State of California
California Regional Water Quality Control Board
Santa Ana Region

March 14, 2014

ITEM: ***10**

SUBJECT: Renewal of Waste Discharge and Water Reclamation Requirements for the City of Corona, Department of Water and Power, Water Reclamation Facility No. 3, Order No. R8-2014-0015, NPDES No. CA8000395

DISCUSSION:

See attached Fact Sheet

RECOMMENDATIONS:

Adopt Order No. R8-2014-0015, NPDES No. CA8000395, as presented.

COMMENTS SOLICITATION:

Comments were solicited from the City of Corona and the following agencies:

US Environmental Protection Agency, Permits Issuance Section (WTR-5) – Peter Kozelka, Ph.D
US Army District, Los Angeles, Corps of Engineers – Regulatory Branch
US Fish and Wildlife Service, Carlsbad
State Water Resources Control Board, Office of the Chief Counsel – David Rice
State Water Resources Control Board, Division of Water Quality – Phil Isorena
State Department of Water Resources, Glendale
State Department of Fish and Game, Ontario
California Department of Public Health, San Diego – Steve Williams
Santa Ana Watershed Project Authority – Celeste Cantu
Santa Ana River Dischargers Association – Edward Filadelfia
Riverside County Flood Control and Water Conservation District – Jason Uhley
Riverside County Environmental Health – John Watkins
Orange County Water District – Nira Yamachika / Marsha Westropp
Inland Empire Waterkeeper – Megan Brousseau
Orange County Coastkeeper – Garry Brown
Lawyers for Clean Water - Daniel Cooper

State of California
California Regional Water Quality Control Board

Santa Ana Region

3737 Main Street, Suite 500, Riverside, California 92501-3348
Phone (951) 782-4130 - FAX (951) 781-6288– TDD (951) 782-3221

http://www.waterboards.ca.gov/santaana

ORDER NO. R8-2014-0015
NPDES NO. CA8000395

WASTE DISCHARGE AND WATER RECLAMATION REQUIREMENTS FOR THE CITY OF CORONA, DEPARTMENT OF WATER AND POWER WATER RECLAMATION FACILITY NO. 3 RIVERSIDE COUNTY

Draft

The following Discharger is subject to waste discharge requirements as set forth in this Order:

Table 1. Discharger/Facility Information

Discharger/Operator	City of Corona, Department of Water and Power
Name of Facility	Water Reclamation Facility No. 3
Facility Location	3997 Temescal Canyon Rd., Corona, CA 92883
The U.S. Environmental Protection Agency (USEPA) and the Regional Water Quality Control Board have classified this discharge as a **major** discharge.	

The discharge by the City of Corona, Department of Water and Power, from the discharge points identified below is subject to waste discharge requirements as set forth in this Order:

Table 2. Discharge Locations and Recycled Water Use Areas

Discharge Point	Effluent Description	Discharge Point (Latitude)	Discharge Point (Longitude)	Receiving Water
001	Up to 1 mgd of Tertiary treated wastewater	33° 49'24"	117°30'22"	Temescal Creek, Reach 2
002	Up to 1 mgd of Tertiary treated wastewater	33°49'20"	117°30'25"	Bedford and Temescal Groundwater Management Zones

Table 3. Administrative Information

This Order was adopted by the Regional Water Board on:	March 14, 2014
This Order shall become effective on:	April 1, 2014
This Order shall expire on:	March 31, 2019
The Discharger shall file a Report of Waste Discharge in accordance with Title 23, California Code of Regulations, as application for issuance of new waste discharge requirements no later than:	October 31, 2018

IT IS HEREBY ORDERED, that this Order supersedes and rescinds Order No. R8-2007-0007 except for enforcement purposes, and, in order to meet the provisions contained in Division 7 of the California Water Code (CWC) (commencing with section 13000) and regulations adopted thereunder, and the provisions of the federal Clean Water Act (CWA) and regulations and guidelines adopted thereunder, the Discharger shall comply with the requirements in this Order.

I, Kurt V. Berchtold, Executive Officer, do hereby certify that this Order with all attachments is a full, true, and correct copy of an Order adopted by the California Regional Water Quality Control Board, Santa Ana Region, on March 14, 2014.

Kurt V. Berchtold, Executive Officer

Table of Contents

I. Discharger/Facility information 5
II. Findings 5
III. Discharge Prohibitions 11
IV. Effluent Limitations and Discharge Specifications 12
A. Effluent Limitations – Discharge Point 001 12
1. Effluent Limitations 12
2. Toxicity Requirements 15
B. Recycled Water Specifications – Discharge Point 002 16
C. Stormwater Discharge Specifications 21
V. Receiving Water Limitations 21
A. Surface Water Limitations 21
B. Groundwater Limitations 22
VI. Provisions 22
A. Standard Provisions 22
B. Monitoring and Reporting Program Requirements 25
C. Special Provisions 25
1. Reopener Provisions 25
2. Special Studies, Technical Reports and Additional Monitoring Requirements 26
3. Best Management Practices and Pollution Prevention 28
4. Construction, Operation and Maintenance Specifications 29
5. Special Provisions for Municipal Facilities 30
VII. Compliance Determination 31

LIST OF TABLES

Table 1. Discharger/Facility Information 1
Table 2. Discharge Locations and Recycled Water Use Areas 1
Table 3. Administrative Information 2
Table 4. Discharger/Facility Information 5
Table 5. Basin Plan Beneficial Uses 8
Table 6. Effluent Limitations at DP-001 12
Table 7. Recycled Water Effluent Limitations at DP 002 16

LIST OF ATTACHMENTS

Attachment A – Definitions A-1
Attachment B – Vicinity Map B-1
Attachment C – Flow Schematic C-1
Attachment D – Standard Provisions D-1
Attachment E – Monitoring And Reporting Program E-1
Attachment F – Fact Sheet F-1
Attachment G – EPA Priority Pollutants List G-1
Attachment H – Minimum Levels H-1
Attachment I – Triggers for Monitoring Priority Pollutants I-1
Attachment J – Storm Water Pollution Prevention Plan Requirements J-1
Attachment K – Storm Water Monitoring and Reporting Requirements K-1

I. DISCHARGER/FACILITY INFORMATION

The following Discharger is subject to waste discharge requirements as set forth in this Order:

Table 4. Discharger/Facility Information

Discharger	City of Corona, Department of Water and Power
Discharger Contact	Jonathan Daly, General Manager; (951) 7362477
Mailing Address	755 Public Safety Way, Corona, CA 92880
Facility	Water Reclamation Facility No. 3
Facility Contact	Frank Garza, Chief Reclamation Operator, (951) 279-3665
Facility Location	3997 Temescal Canyon Rd. Corona, CA 92883
Type of Facility	POTW/Water Reclamation Facility
Facility Design Flow	1 mgd of tertiary treatment

II. FINDINGS

The California Regional Water Quality Control Board, Santa Ana Region (hereinafter Regional Water Board), finds:

A. Background. The City of Corona, Department of Water & Power (hereinafter Discharger) is currently discharging wastewater and producing recycled water pursuant to Order No. R8-2007-0007 and National Pollutant Discharge Elimination System (NPDES) Permit No. CA8000395. The Discharger submitted a Report of Waste Discharge on October 3, 2011 and applied for an NPDES permit renewal for the intermittent discharge of tertiary treated wastewater (up to 1 mgd) to Temescal Creek, Reach 2, a tributary to Reach 3 of the Santa Ana River.

For the purposes of this Order, references to the "discharger" or "permittee" in applicable federal and State laws, regulations, plans, or policies are held to be equivalent to references to the Discharger herein.

B. Facility Description. The Discharger owns and operates Water Reclamation Facility No. 3, a publicly owned treatment works and water reclamation facility. The facility consists of headworks structures, rotating drum screen, activated sludge aeration basins with nitrification and denitrification zones, microfiltration membrane system, chlorination and dechlorination. Biosolids are pumped to the Discharger's WRF Nos. 1 and 2. Attachment B provides a map of the area around the Facility. Attachment C provides a flow schematic of the Facility.

C. **Legal Authorities.** This Order serves as Waste Discharge Requirements (WDRs) and Water Reclamation Requirements, issued pursuant to Article 4, Chapter 4 of the California Water Code (CWC) commencing with Section 13260. This Order also serves as an NPDES permit pursuant to Section 402 of the federal Clean Water Act (CWA) and implementing regulations adopted by the U.S. Environmental Protection Agency (USEPA), and Chapter 5.5, Division 7 of the CWC for point source discharges from this Facility to surface waters.

D. **Background and Rationale for Requirements.** The Regional Water Board developed the requirements in this Order based on information submitted as part of the application, through monitoring and reporting programs, and other available information. The Fact Sheet (Attachment F), which contains background information and rationale for Order requirements, is hereby incorporated into this Order and, thus constitutes part of the Findings for this Order. Attachments A through E and G through I are also incorporated into this Order.

E. **Pretreatment Requirements.** Not applicable. There are no discharges of industrial waste to WRF-3.

F. **California Environmental Quality Act (CEQA).** Under Water Code Section 13389, this action to adopt waste discharge requirements that will serve as a NPDES permit is exempt from the provisions of CEQA, Public Resources Code Section 21100 through 21177.

G. **Technology-based Effluent Limitations.** Section 301(b) of the CWA and implementing USEPA permit regulations at 40 CFR[1] 122.44, require that permits include conditions meeting applicable technology-based requirements at a minimum, and any more stringent effluent limitations necessary to meet applicable water quality standards. The discharge authorized by this Order must meet minimum federal technology-based requirements based on Secondary Treatment Standards at 40 CFR Part 133 and/or Best Professional Judgment (BPJ) in accordance with 40 CFR 125.3. A detailed discussion of the technology-based effluent limitations development is included in the Fact Sheet (Attachment F).

[1] *Title 40 of the Code of Federal Regulations*

H. **Water Quality-Based Effluent Limitations.** Section 301(b) of the CWA and 40 CFR 122.44(d) require that permits include limitations more stringent than applicable federal technology-based requirements where necessary to achieve applicable water quality standards. This Order contains requirements, expressed as a technology equivalence requirement, more stringent than secondary treatment requirements that are necessary to meet applicable water quality standards. The rationale for these requirements, which consist of tertiary treatment requirements, is discussed in the Fact Sheet.

40 CFR 122.44(d)(1)(i) mandates that permits include effluent limitations for all pollutants that are or may be discharged at levels that have the reasonable potential to cause or contribute to an exceedance of a water quality standard, including numeric and narrative objectives within a standard. Where reasonable potential has been established for a pollutant, but there is no numeric criterion or objective for the pollutant, water quality-based effluent limitations (WQBELs) must be established using: (1) USEPA criteria guidance under CWA section 304(a), supplemented where necessary by other relevant information; (2) an indicator parameter for the pollutant of concern; or (3) a calculated numeric water quality criterion, such as a proposed state criterion or policy interpreting the state's narrative criterion, supplemented with other relevant information, as provided in 40 CFR 122.44(d)(1)(vi).

I. **Water Quality Control Plans.** The Regional Water Board adopted a revised Water Quality Control Plan for the Santa Ana Region (hereinafter Basin Plan) that became effective on January 24, 1995. The Basin Plan designates beneficial uses, establishes water quality objectives, and contains implementation programs and policies to achieve those objectives for all waters in the Santa Ana Region addressed through the plan.

More recently, the Basin Plan was amended significantly to incorporate revised boundaries for groundwater subbasins, now termed "management zones", new nitrate-nitrogen and TDS objectives for the new management zones, and new nitrogen and TDS management strategies applicable to both surface and ground waters. This Basin Plan Amendment was adopted by the Regional Water Board on January 22, 2004. The State Water Resources Control Board (State Water Board) and Office of Administrative Law (OAL) approved the Amendment on September 30, 2004 and December 23, 2004, respectively. EPA approved the surface water standards components of the N/TDS Amendment on June 20, 2007.

In addition, the Basin Plan implements State Water Board Resolution No. 88-63, which established State policy that all waters, with certain exceptions, should be considered suitable or potentially suitable for municipal or domestic supply. Based on the criteria specified in the State Water Board Resolution, the Basin Plan specifies that Temescal Creek and downstream reaches of the Santa Ana River are excepted from the municipal and domestic supply beneficial use.

As discussed in detail in the Fact Sheet (Attachment F), beneficial uses applicable to Temescal Creek, Reach 2, the Santa Ana River, Reach 3 and contiguous Groundwater Management Zones are as follows:

Table 5. Basin Plan Beneficial Uses

Discharge Point	Receiving Water Name	Beneficial Use(s)
001	Temescal Creek Reach 2	Intermittent agricultural supply, industrial supply, groundwater recharge, warm freshwater habitat, water contact recreation, and non-contact water recreation. Excepted from municipal and domestic supply
	Santa Ana River, Reach 3	Agricultural supply; ground water recharge; water contact recreation; non-contact water recreation; warm freshwater habitat; wildlife habitat; and rare, threatened or endangered species Excepted from municipal and domestic supply
002	Temescal and Bedford Groundwater Management Zones	Municipal and domestic water supply, agricultural supply, industrial service supply, and industrial process supply.

Requirements of this Order implement the Basin Plan.

J. **National Toxics Rule (NTR) and California Toxics Rule (CTR).** USEPA adopted the NTR on December 22, 1992, and later amended it on May 4, 1995 and November 9, 1999. About forty criteria in the NTR applied in California. On May 18, 2000, USEPA adopted the CTR. The CTR promulgated new toxics criteria for California and, in addition, incorporated the previously adopted NTR criteria that were applicable in the state. The CTR was amended on February 13, 2001. These rules contain water quality criteria for priority pollutants.

K. **State Implementation Policy.** On March 2, 2000, the State Water Board adopted the Policy for Implementation of Toxics Standards for Inland Surface Waters, Enclosed Bays, and Estuaries of California (State Implementation Policy or SIP). The SIP became effective on April 28, 2000 with respect to the priority pollutant criteria promulgated for California by the USEPA through the NTR and to the priority pollutant objectives established by the Regional Water Board in the Basin Plan. The SIP became effective on May 18, 2000 with respect to the priority pollutant criteria promulgated by the USEPA through the CTR. The State Water Board adopted amendments to the SIP on February 24, 2005 that became effective on July 13, 2005. The SIP establishes implementation provisions for priority pollutant criteria and objectives and provisions for chronic toxicity control. Requirements of this Order implement the SIP.

L. **State General Waste Discharge Requirements for Sanitary Sewer Systems.** The State Water Board issued General Waste Discharge Requirements for Sanitary Sewer Systems, Water Quality Order No. 2006-0003, on May 2, 2006, requiring public agencies that own sanitary sewer systems, comprised of more than one mile of pipes or sewer lines, to enroll for coverage under the General Order. The General Order requires agencies to develop sanitary sewer management plans (SSMPs) and report all sanitary sewer overflows (SSOs). This Order requires the Discharger to continue its enrollment under the General Order.

M. **Alaska Rule.** On March 30, 2000, USEPA revised its regulation that specifies when new and revised State and Tribal water quality standards (WQS) become effective for CWA purposes (40 CFR 131.21, 65 FR 24641, April 27, 2000). Under the revised regulation (also known as the Alaska rule), new and revised standards submitted to USEPA after May 30, 2000, must be approved by USEPA before being used for CWA purposes. The final rule also provides that standards already in effect and submitted to USEPA by May 30, 2000, may be used for CWA purposes, whether or not approved by USEPA.

N. **Stringency of Requirements for Individual Pollutants.** This Order contains both technology-based and water quality based effluent limitations for individual pollutants. The technology-based effluent limitations consist of restrictions on BOD_5, suspended solids, turbidity, and coliform bacteria. This Order's technology-based pollutant restrictions implement the minimum, applicable federal technology-based requirements. In addition, this Order contains effluent limitations more stringent than the minimum, federal technology-based requirements that are necessary to meet water quality standards. Water quality-based effluent limitations have been scientifically derived to implement water quality objectives that protect beneficial uses. Both the beneficial uses and the water quality objectives have been approved pursuant to federal law and are the applicable federal water quality standards. To the extent that toxic pollutant water quality-based effluent limitations were derived from the CTR, the CTR is the applicable standard pursuant to 40 CFR 131.38. The scientific procedures for calculating the individual water quality-based effluent limitations are based on the CTR-SIP, which was approved by USEPA on May 18, 2000. All beneficial uses and water quality objectives contained in the Basin Plan were approved under state law and submitted to and approved by USEPA prior to May 30, 2000. Any water quality objectives and beneficial uses submitted to USEPA prior to May 30, 2000, but not approved by USEPA before that date, are nonetheless "applicable water quality standards for purposes of the CWA" pursuant to 40 CFR 131.21(c)(1). Collectively, this Order's restrictions on individual pollutants are no more stringent than required to implement the technology-based requirements of the CWA and the applicable water quality standards for purposes of the CWA.

O. **Antidegradation Policy.** 40 CFR 131.12 requires that State water quality standards include an antidegradation policy consistent with the federal policy. The State Water Board established California's antidegradation policy in State Water Board Resolution No. 68-16. Resolution No. 68-16 incorporates the federal antidegradation policy, where the federal policy applies under federal law. Resolution No. 68-16 requires that existing quality of waters be maintained unless degradation is justified based on specific findings. The Regional Water Board's Basin Plan implements, and incorporates by reference, both the State and federal antidegradation policies. As discussed in detail in the Fact Sheet (Attachment F), the permitted discharge is consistent with the antidegradation provision of 40 CFR 131.12 and State Water Board Resolution No. 68-16.

P. **Anti-Backsliding Requirements.** Sections 402(o)(2) and 303(d)(4) of the CWA and federal regulations at 40 CFR122.44(l) prohibit backsliding in NPDES permits. These anti-backsliding provisions require effluent limitations in a reissued permit to be as stringent as those in the previous permit, with some exceptions where limitations may be relaxed. With the exceptions of mercury, bis(2-ethylhexyl)phthalate, selenium and zinc, all effluent limitations in this Order are at least as stringent as the effluent limitations in the previous Order. As discussed in the Fact Sheet (Attachment F), data collected since Order No. R8-2007-0007 was adopted show that mercury, bis(2-ethylhexyl)phthalate, selenium and zinc, no longer pose a reasonable potential to cause or create an exceedances of water quality standards. Therefore, pursuant to CWA Section 402(o)(2(B)(i), limits for mercury, bis(2-ethylhexyl)phthalate, selenium and zinc are no longer included in this Order. This Order conforms with the anti-backsliding requirements of the CWA and federal regulations.

Q. **Endangered Species Act.** This Order does not authorize any act that results in the taking of a threatened or endangered species or any act that is now prohibited, or becomes prohibited in the future, under either the California Endangered Species Act (Fish and Game Code sections 2050 to 2097) or the Federal Endangered Species Act (16 U.S.C.A. sections 1531 to 1544). This Order requires compliance with effluent limits, receiving water limits, and other requirements to protect the beneficial uses of waters of the state. The Discharger is responsible for meeting all requirements of the applicable Endangered Species Act.

R. **Monitoring and Reporting.** Water Code Sections 13267 and 13383 authorize the Regional Water Board to require technical and monitoring reports. 40 CFR 122.48 requires that all NPDES permits specify requirements for recording and reporting monitoring results. The Monitoring and Reporting Program establishes monitoring and reporting requirements to implement State and federal requirements. This Monitoring and Reporting Program is provided in Attachment E.

S. **Biosolids Requirements.** On February 19, 1993, the USEPA issued a final rule for the use and disposal of sewage sludge, 40 CFR, Part 503. This rule requires that producers of sewage sludge meet certain reporting, handling, and disposal requirements. The State of California has not been delegated the authority to implement this program, therefore, the U.S. Environmental Protection Agency is the implementing agency. However, this Order includes Biosolids monitoring requirements.

T. Standard and Special Provisions. Standard Provisions, which apply to all NPDES permits in accordance with 40 CFR 122.41, and additional conditions applicable to specified categories of permits in accordance with 40 CFR 122.42, are provided in Attachment D. The Discharger must comply with all standard provisions and with those additional conditions that are applicable under 40 CFR 122.42. The Regional Water Board has also included in this Order special provisions applicable to the Discharger. A rationale for the special provisions contained in this Order is provided in the attached Fact Sheet.

U. Provisions and Requirements Implementing State law. The provisions/requirements in sections IV.B and IV.C of this Order are included to implement State law only. These provisions are not required or authorized under the federal CWA; consequently, violations of these provisions are not subject to the enforcement remedies that are available for NPDES violations.

V. Notification of Interested Parties. The Regional Water Board has notified the Discharger and interested agencies and persons of its intent to prescribe Waste Discharge Requirements for the discharge and has provided them with an opportunity to submit their written comments and recommendations. Details of notification are provided in the Fact Sheet (Attachment F) of this Order.

W. Consideration of Public Comment. The Regional Water Board, in a public meeting, heard and considered all comments pertaining to the discharge. Details of the Public Hearing are provided in the Fact Sheet (Attachment F) of this Order.

III. DISCHARGE PROHIBITIONS

A. The discharge of wastewater at a location or in a manner different from those described in this Order is prohibited.

B. The bypass or overflow of untreated wastewater or wastes to surface waters or surface water drainage courses is prohibited, except as allowed in Standard Provision I. G. of Attachment D, Federal Standard Provisions.

C. The discharge of any substances in concentrations toxic to animal or plant life is prohibited.

D. The discharge of any radiological, chemical, or biological warfare agent or high level radiological waste is prohibited.

IV. EFFLUENT LIMITATIONS AND DISCHARGE SPECIFICATIONS

A. Effluent Limitations – Discharge Point 001

Unless otherwise specified hereinafter, compliance with the following effluent limitations shall be measured at monitoring location M-001 as described in the attached Monitoring and Reporting Program (Attachment E).

1. Effluent Limitations

The Discharger shall comply with the following:

a. Physical/Biological/Chemical Limitations:

Table 6. Effluent Limitations at DP-001

Parameter	Units	Effluent Limitations		
		Average Monthly	Average Weekly	Maximum Daily
Biochemical Oxygen Demand 5-day @ 20°C	mg/L (lbs/day)	20 (167)	30 (250)	--
Total Suspended Solids	mg/L (lbs/day)	20 (167)	30 (250)	--
Ammonia-Nitrogen	mg/L (lbs/day)	4.5 (38)	--	--
Copper	µg/l (lbs/day)	10.3 (0.09)		16.6 (0.14)
Lead	µg/l (lbs/day)	2.1 (0.018)		7.0 (0.058)
Bromodichloro methane	µg/l (lbs/day)	46 (0.38)	--	86 (0.72)

b. Percent Removal:

The average monthly percent removal of BOD 5-day 20°C and total suspended solids shall not be less than 85 percent.

c. Total Dissolved Solids (TDS):

1) The 12-month flow weighted running average TDS concentration of the discharge at DP-001 shall not exceed 700 mg/L, unless the Discharger demonstrates to the satisfaction of the Regional Board's Executive Officer that:

a) Discharges in excess of the TDS limit are due to the quality of water supply sources utilized in the Discharger's service area, and that all reasonable steps, as agreed upon by the Executive Officer, have been taken to ensure that the best quality supplies are obtained and utilized in the Discharger's service area; and/or

b) Discharges in excess of the TDS limits are due to chemical additions in the treatment process needed to meet waste discharge requirements, and the Discharger has taken all steps to optimize chemical additions so as to minimize the increases; and

c) The Discharger implements a plan, with the approval of the Executive Officer, to offset discharges in excess of the TDS limit[2].

2) The 12-month flow weighted running average TDS concentration of the discharge at DP-001 and DP-002 shall not exceed the 12-month flow weighted running average TDS concentration in the water supply by more than 250 mg/L, unless the Discharger demonstrates to the satisfaction of the Regional Board's Executive Officer that TDS discharges in excess of the 250 mg/l mineral increment are due solely to chemical additions in the treatment process needed to meet waste discharge requirements, and the Discharger has taken all steps to optimize chemical additions so as to minimize the TDS increases.

d. Total Inorganic Nitrogen (TIN):

The 12-month flow weighted running average Total Inorganic Nitrogen (TIN) concentration of the discharge from DP-001 shall not exceed 10 mg/L, unless the Discharger implements a plan, with the approval of the Executive Officer, to offset TIN discharges in excess of the TIN limits[2].

e. Disinfected Tertiary Treated Wastewater:

The discharge at DP-001 shall at all times be a filtered and subsequently disinfected wastewater and shall meet the following limitations:

f. Turbidity: When filtration is through microfiltration, ultrafiltration, nanofiltration, or reverse osmosis membrane the turbidity of the filtered wastewater shall not exceed any of the following:

1) 0.2 NTU more than 5 percent of the time within a 24-hour period; and
2) 0.5 NTU at any time

---

[2] *The Discharger operates the Temescal Desalter at full capacity, as an acceptable offset for discharges of TDS/TIN in excess of these limits.*

g. Disinfection: The discharge shall meet the following:

1) When a chlorine disinfection process is utilized following filtration, a CT (the product of total chlorine residual and modal contact time measured at the same point) value of not less than 450 milligram-minutes per liter shall be provided at all times, with a modal contact time[3] of at least 90 minutes[4], based on peak dry weather design flow[5].

2) When a disinfection process combined with the filtration process is utilized, the combined process shall demonstrate inactivation and/or removal of 99.999 percent of the plaque-forming units of F-specific bacteriophage MS2, or polio virus in the wastewater. A virus that is at least as resistant to disinfection as polio virus may be used for purposes of the demonstration.

h. Coliform: The disinfected wastewater shall meet the following:

1) The weekly median concentration of total coliform bacteria shall not exceed a Most Probable Number (MPN) of 2.2 total coliform bacteria per 100 milliliters (ml).

   To comply with the limit, the 7-day median MPN must not exceed 2.2 per 100 milliliters on any day during the week. However, only one violation is recorded for each calendar week, even if the 7-day median MPN value is greater than 2.2 for more than one day in the week.

2) The number of total coliform bacteria shall not exceed an MPN of 23 total coliform bacteria per 100 ml in more than one sample in any 30-day period.

3) No total coliform bacteria sample shall exceed an MPN of 240 total coliform bacteria per 100 ml.

---

[3] *Modal contact time and CT shall be calculated based on the minimum one-hour average value in a 24-hr period.*

[4] *The modal contact time requirement is applicable unless the receiving water provides at least a 1:1 dilution. The receiving water considered here shall exclude upstream POTW effluent flow.*

[5] *"Peak Dry Weather Flow" means the arithmetic mean of the maximum peak flow rates sustained over some period of time (for example three hours) during the maximum 24-hour dry weather period. Dry weather period is defined as period of little or no rainfall.*

i. Total Chlorine Residual:

The discharge shall not exceed any of the following:

1) The total time during which the total chlorine residual values are above 0.1 mg/L (instantaneous maximum value) shall not exceed 7 hours and 26 minutes in any calendar month;
2) No individual excursion above 0.1 mg/L shall exceed 30 minutes; and
3) No individual excursion shall exceed 5.0 mg/L.

j. pH:

The pH of the discharge at DP-001 shall be maintained between 6.5 to 8.5 pH units. Compliance with pH limits shall be determined as follows:

1) The total time during which the pH is outside the range of 6.5-8.5 pH units shall not exceed 7 hours and 26 minutes in any calendar month; and

2) No individual excursion from the above range shall exceed 60 minutes.

2. Toxicity Requirements

There shall be no acute or chronic toxicity in the discharge nor shall the discharge cause any acute or chronic toxicity in the receiving water. All waters shall be maintained free of substances in concentrations which are toxic to, or which produce detrimental physiological responses in human, plant, animal, or indigenous aquatic life. This Order contains no numeric limitation for toxicity. However, the Discharger shall conduct chronic toxicity monitoring.

The Discharger shall implement the accelerated monitoring as specified in Attachment E when the result of any single chronic toxicity test of the effluent exceeds 1.0 TUc.

B. Recycled Water Specifications – Discharge Point 002

Unless otherwise specified hereinafter, compliance with the following limitations shall be measured at monitoring location REC-001 as described in the attached Monitoring and Reporting Program (Attachment E).

1. The Discharger shall comply with the following limitations for the production and use of recycled water supplied for landscape irrigation, or other similar uses:

   a. Physical/Biological Limitations:

Table 7. Recycled Water Effluent Limitations at DP 002

Parameter	Units	Effluent Limitations	
		Average Monthly	Average Weekly
Biochemical Oxygen Demand 5-day @ 20°C	mg/L	20	30
Total Suspended Solids	mg/L	20	30

   b. Total Dissolved Solids (TDS)

      1) The 12-month flow weighted running average TDS constituent concentration shall not exceed 700 mg/L, unless the Discharger demonstrates to the satisfaction of the Regional Board's Executive Officer that:

         a. Discharges in excess of the TDS limit is due to the quality of water supply sources utilized in the Discharger's service area, and that all reasonable steps, as agreed upon by the Executive Officer, have been taken to ensure that the best quality supplies are obtained and utilized in the Discharger's service area; and/or

         b. Discharges in excess of the TDS limits are due to chemical additions in the treatment process needed to meet waste discharge requirements, and the Discharger has taken all steps to optimize chemical additions so as to minimize the increases; and

         c. The Discharger implements a plan, with the approval of the Executive Officer, to offset TDS discharges in excess of the 700 mg/L limit.

2) The 12-month flow weighted running average TDS concentration shall not exceed the 12-month flow weighted running average TDS concentration in the water supply by more than 250 mg/L, unless discharges in excess of the 250 mg/L TDS mineral increment are due to chemical additions in the treatment process needed to meet waste discharge requirements, and the Discharger has taken all steps to optimize chemical additions so as to minimize the TDS increases.

c. Recycled water, as described in Section 60307(a) of Division 4, Chapter 3, Title 22, California Code of Regulations, supplied for irrigation of food crops, parks and playground, school yards, residential landscaping and other irrigation uses not specified in Section 60304(a) of Division 4, Chapter 3, Title 22, California Code of Regulations or not prohibited in other Sections of the California Code of Regulations shall at all times be adequately oxidized, filtered, and disinfected tertiary treated wastewater and shall meet the following limitations:

1) Turbidity: When filtration is through microfiltration, ultrafiltration, nanofiltration, or reverse osmosis membrane, the turbidity of the filtered wastewater shall not exceed any of the following:

1) 0.2 NTU more than 5 percent of the time within a 24-hour period; and
2) 0.5 NTU at any time

2). Disinfection: The Discharger shall comply with the following:

a) When a chlorine disinfection process is utilized following filtration, a CT (the product of total chlorine residual and modal contact time measured at the same point) value of not less than 450 milligram-minutes per liter at all times with a modal contact time of at least 90 minutes, based on peak dry weather design flow; shall be provided.
b) When a disinfection process combined with the filtration process is utilized, the combined process shall demonstrate inactivation and/or removal of 99.999 percent of the plaque-forming units of F-specific bacteriophage MS2, or polio virus in the wastewater. A virus that is at least as resistant to disinfection as polio virus may be used for purposes of the demonstration.

3) Coliform: The Discharger shall comply with the following:

a) The weekly median concentration of total coliform bacteria shall not exceed a Most Probable Number (MPN) of 2.2 total coliform bacteria per 100 milliliters (ml).

To comply with the limit, the 7-day median MPN must not exceed 2.2 per 100 milliliters on any day during the week. However, only one violation is recorded for each calendar week, even if the 7-day median MPN value is greater than 2.2 for more than one day in the week.

b) The number of total coliform bacteria shall not exceed an MPN of 23 total coliform bacteria per 100 ml in more than one sample in any 30-day period.
c) No total coliform bacteria sample shall exceed an MPN of 240 total coliform bacteria per 100 ml.

d. Recycled water supplied for irrigation of food crops where the edible portion is produced above ground and not contacted by the recycled water shall at all times be adequately oxidized and disinfected so that average weekly total coliform bacteria in the disinfected effluent does not exceed a most probable number (MPN) of 2.2 per 100 milliliters utilizing the bacteriological results of the last seven days for which analyses have been completed, and the number of total coliform bacteria does not exceed an MPN of 23 per 100 milliliters in more than one sample.

e. Recycled water supplied for the uses listed below shall be an oxidized and disinfected water so that:

1) The average weekly total coliform bacteria in the disinfected effluent does not exceed a most probable number (MPN) of 23 per 100 milliliters utilizing the bacteriological results of the last seven days for which analyses have been completed. To comply with the limit, the 7-day median MPN must not exceed 23 per 100 milliliters on any day during the week. However, only one violation is recorded for each calendar week, even if the 7-day median MPN value is greater than 23 for more than one day in the week, and

2) The number of total coliform bacteria does not exceed an MPN of 240 per 100 milliliters in more than one sample in any 30 day period.

The uses are:

a) Industrial boiler feed, nonstructural fire-fighting, backfill consolidation around nonpotable piping, soil compaction, mixing concrete, dust control on roads and streets, cleaning roads, sidewalks and outdoor work areas and industrial process water that will not come into contact with workers.

b) Irrigation of cemeteries, freeway landscaping, restricted access golf courses, ornamental nursery stock and sod farms where access by the general public is not restricted, pasture for animals producing milk for human consumption, and any nonedible vegetation where access is controlled so that irrigated area cannot be used as if it were part of a park, playground or school yard.

f. Recycled water supplied for uses specified in Sections 60304 and 60307 of Title 22 where filtration is provided pursuant Section 60301.320(a) and coagulation is not used as part of the treatment process, shall at all times comply with the following:

   1) The turbidity of the influent to the filters is continuously measured and the influent turbidity does not exceed 5 NTU for more than 15 minutes and never exceeds 10 NTU;

   2) The filter effluent turbidity shall not exceed 2 NTU; and;

   3) Should the filter influent turbidity exceed 5 NTU for more than 15 minutes, chemical addition shall be automatically activated if available, if not, the wastewater shall be diverted.

2. The Discharger shall be responsible for assuring that recycled water is delivered and utilized in conformance with this Order and the recycling criteria contained in Title 22, Division 4, Chapter 3, Sections 60301 through 60355, California Code of Regulations. The Discharger shall conduct periodic inspections of the facilities of the recycled water users to monitor compliance by the users with this Order.

3. The Discharger shall establish and enforce the Rules and Regulations for Recycled Water Users, governing the design and construction of recycled water use facilities and the use of recycled water in accordance with the uniform statewide recycling criteria established pursuant to California Water Code Section 13521.

   a. Use of recycled water by the Discharger shall be consistent with its Rules and Regulations for Recycled Water Use.

   b. Any revisions made to the Rules and Regulations shall be subject to the review of the Regional Water Board, the California Department of Public Health, and the County Environmental Health Department. The revised Rules and Regulations or a letter certifying that the Discharger's Rules and Regulations contain the updated provisions in this Order, shall be submitted to the Regional Water Board within 60 days of adoption of this Order by the Regional Water Board.

4. The Discharger shall, within 60 days of the adoption of this Order, review and update as necessary its program to conduct compliance inspections of recycled water use sites. Inspections shall determine the status of compliance with the Discharger's Rules and Regulations for Recycled Water Use.

5. The storage, delivery, or use of recycled water shall not individually or collectively, directly or indirectly, result in a pollution or nuisance, or adversely affect water quality, as defined in the California Water Code

6. Prior to delivering recycled water to any new user, the Discharger shall submit to the Regional Water Board, the California Department of Public Health and the Riverside County Environmental Health Department a report containing the following information for review and approval:

    a. The average number of persons estimated to be served at each use site area on a daily basis.

    b. The specific boundaries of the proposed use site area, including a map showing the location of each facility, drinking water fountain, and impoundment to be used.

    c. The person or persons responsible for operation of the recycled water system at each use area.

    d. The specific use to be made of the recycled water at each use area.

    e. The methods to be used to assure that the installation and operation of the recycled system will not result in cross connections between the recycled water and potable water piping systems. This shall include a description of the pressure, dye or other test methods to be used to test the system.

    f. Plans and specifications which include following:

        1) Proposed piping system to be used.
        2) Pipe locations of both the recycled and potable systems.
        3) Type and location of the outlets and plumbing fixtures that will be accessible to the public.
        4) The methods and devices to be used to prevent backflow of recycled water into the potable water system.
        5) Plan notes relating to specific installation and use requirements.

7. The Discharger shall submit a Title 22 Engineering Report for review and approval by the California Department of Health Services prior to the use of reclaimed water at proposed reclaimed water use sites. The Engineering Report shall comply with California Code of Regulations, Title 22, Chapter 3.

8. The use of recycled water at new use sites shall only commence after the California Department of Public Health (CDPH) grants final approval for such use. The Discharger shall provide the Regional Water Board with a copy of the CDPH approval letter within 30 days of the approval notice.

9. The Discharger shall require each user of recycled water to designate an on-site supervisor responsible for the operation of the recycled water distribution system within the recycled water use area. The supervisor shall be responsible for enforcing this Order, prevention of potential hazards, the installation, operation and maintenance of the distribution system, maintenance of the distribution and irrigation system plans in "as-built" form, and for the distribution of the recycled wastewater in accordance with this Order.

10. Recycled water shall at all times be maintained within the property lines of any user. There shall be no direct or indirect discharge of recycled water into drainage systems that could affect surface water quality standards.

C. Stormwater Discharge Specifications

All stormwater runoff from the facility is collected and discharged into the treatment system. As such, no separate requirements are necessary for stormwater runoff.

V. RECEIVING WATER LIMITATIONS

A. Surface Water Limitations

1. Receiving water limitations are based upon water quality objectives contained in the Basin Plan. As such, they are a required part of this Order. The discharge shall not cause the following in Temescal Creek, or in downstream Reaches of the Santa Ana River:

   a. Coloration of the receiving waters, which causes a nuisance or adversely affects beneficial uses.

   b. Deposition of oil, grease, wax or other materials in the receiving waters in concentrations which result in a visible film or in coating objects in the water, or which cause a nuisance or affect beneficial uses.

   c. An increase in the amounts of suspended or settleable solids in the receiving waters, which will cause a nuisance or adversely affect beneficial uses as a result of controllable water quality factors.

   d. Taste or odor-producing substances in the receiving waters at concentrations, which cause a nuisance or adversely affect beneficial uses.

   e. The presence of radioactive materials in the receiving waters in concentrations, which are deleterious to human, plant or animal life.

   f. The depletion of the dissolved oxygen concentration below 5.0 mg/l.

g. The temperature of the receiving waters to be raised above 90°F (32°C) during the period of June through October, or above 78°F (26°C) during the rest of the year.

h. The concentration of pollutants in the water column, sediments, or biota to adversely affect the beneficial uses of the receiving water. The discharge shall not result in the degradation of inland surface water communities and populations, including vertebrate, invertebrate, and plant species.

2. The discharge of wastes shall not cause a violation of any applicable water quality standards for receiving waters adopted by the Regional Water Board or State Water Board, as required by the Clean Water Act and regulations adopted thereunder.

3. Pollutants not specifically mentioned and limited in this Order shall not be discharged at levels that will bioaccumulate in aquatic resources to levels, which are harmful to human health.

4. The discharge shall not contain constituent concentrations of mercury that will result in the bioaccumulation of methylmercury in fish flesh tissue greater than 0.3 milligram methylmercury/kilogram. (See also Section VI.C.1.e. and VI.C.2.a, below).

B. Groundwater Limitations

The discharge of waste or use of recycled water shall not cause the underlying groundwater to be degraded, to exceed water quality objectives, unreasonably affect beneficial uses, or cause a condition of pollution or nuisance.

VI. PROVISIONS

A. Standard Provisions

1. The Discharger shall comply with all Standard Provisions included in Attachment D of this Order.

2. The Discharger shall comply with the following provisions:

   a. Failure to comply with provisions or requirements of this Order, or violation of other applicable laws or regulations governing discharges from this facility, may subject the Discharger to administrative or civil liabilities, criminal penalties, and/or other enforcement remedies to ensure compliance. Additionally, certain violations may subject the Discharger to civil or criminal enforcement from appropriate local, state, or federal law enforcement entities.

b. In the event the Discharger does not comply or will be unable to comply for any reason, with any prohibition, discharge limitations (e.g., maximum daily effluent limitation), or receiving water limitation of this Order, the Discharger shall notify the Regional Water Board by telephone (951) 782-4130 within 24 hours of having knowledge of such noncompliance, and shall confirm this notification in writing within five days, and/or email within 24 hours. The email notifications allow for proper documentation and can help to outline the issue that has occurred, unless the Regional Water Board waives confirmation. The written notification shall state the nature, time, duration, and cause of noncompliance, and shall describe the measures being taken to remedy the current noncompliance and, prevent recurrence including, where applicable, a schedule of implementation. Other noncompliance requires written notification as above at the time of the normal monitoring report.

c. Neither the treatment nor the discharge of pollutants shall create a pollution, contamination, or nuisance as defined by Section 13050 of the CWC.

d. The Discharger shall take all reasonable steps to minimize or correct any adverse impact on the environment resulting from noncompliance with this Order, including such accelerated or additional monitoring as may be necessary to determine the nature and impact of the noncomplying discharge.

e. This Order may be modified, revoked and reissued, or terminated for cause including, but not limited to, the following.

    1) Violation of any terms or conditions of this Order;
    2) Obtaining this Order by misrepresentation or failure to disclose fully all relevant facts, or;
    3) In addition to any other grounds specified herein, this Order may be modified or revoked at any time if, on the basis of any data, the Regional Water Board determines that continued discharges may cause unreasonable degradation of water quality.

f. If an effluent standard or discharge prohibition (including any schedule of compliance specified in such effluent standard or prohibition) is established under Section 307 (a) of the Clean Water Act for a toxic pollutant which is present in the discharge, and such standard or prohibition is more stringent than any limitation for that pollutant in this Order, this Order may be modified or revoked and reissued to conform to the effluent standard or discharge prohibition.

g. The Discharger shall file with the Regional Water Board a Report of Waste Discharge at least 180 days before making any material change in the character, location, or volume of the discharge. A material change includes, but is not limited to, the following:

   1) Adding a major industrial waste discharge to a discharge of essentially domestic sewage, or adding a new process or product by an industrial facility resulting in a change in the character of the waste.
   2) Significantly changing the disposal method or location, such as changing the disposal to another drainage area or water body.
   3) Significantly changing the method of treatment.
   4) Increasing the treatment plant design capacity beyond that specified in this Order.

h. The provisions of this Order are severable, and if any provision of this Order, or the application of any provision of this Order to any circumstance, is held invalid, the application of such provision to other circumstances, and the remainder of this Order, shall not be affected thereby.

i. The Discharger shall maintain a copy of this Order at the site so that it is available to site operating personnel at all times. Key operating personnel shall be familiar with its content.

j. The Discharger shall optimize chemical additions needed in the treatment process to meet waste discharge requirements so as to minimize total dissolved solid increases in the treated wastewater.

k. Collected screenings, sludge, and other solids removed from liquid wastes shall be disposed of in a manner approved by the Regional Water Board's Executive Officer.

l. If the Discharger demonstrates a correlation between the biological oxygen demand (BOD^5) and total organic carbon (TOC) concentrations in the effluent to the satisfaction of the Executive Officer, compliance with the BOD5 limits contained in this Order may be determined based on analyses of the TOC of the effluent.

m. In the event of any change in control or ownership of land or waste discharge facility presently owned or controlled by the Discharger, the Discharger shall notify the succeeding owner or operator of the existence of this Order by letter, a copy of which shall be forwarded to the Regional Water Board.

n. The treatment facilities shall be designed, constructed, operated, and maintained to prevent inundation or washout due to floods with a 100-year return frequency.

o. The Discharger shall file a written report with the Regional Board within ninety (90) days after the average dry-weather waste flow for any month equals or exceeds 75 percent of the design capacity of the waste treatment and/or disposal facilities. The Discharger's senior administrative officer shall sign a letter which transmits that report and certifies that the policy making body is adequately informed about it. The report shall include:

1. Average daily flow for the month, the date on which instantaneous peak flow occurred, the rate of that peak flow, and the total flow for the day.

2. The Discharger's best estimate of when the average daily dry-weather flow rate will equal or exceed the design capacity of the treatment and/or disposal facilities.

3. The Discharger's intended schedule for studies, design, and/or other steps needed to provide additional capacity for the waste treatment and/or disposal facilities before the waste flow rate equals the capacity of present units.

B. Monitoring and Reporting Program Requirements

The Discharger shall comply with the Monitoring and Reporting Program, and future revisions thereto, in Attachment E of this Order. This monitoring and reporting program may be modified by the Executive Officer at any time during the term of this Order, and may include an increase in the number of parameters to be monitored, the frequency of the monitoring or the number and size of samples to be collected. Any increase in the number of parameters to be monitored, the frequency of the monitoring or the number and size of samples to be collected may be reduced back to the levels specified in the original monitoring and reporting program at the discretion of the Executive Officer.

C. Special Provisions

1. Reopener Provisions

a. This Order will be reopened to address any changes in State or federal statutes, plans, policies or regulations that would affect the quality requirements for the discharges.

b. This Order may be reopened to include effluent limitations for pollutants determined to be present in the discharge in concentrations that pose a reasonable potential to cause or contribute to violations of water quality objectives.

c. This Order may be reopened and modified in accordance with the requirements set forth at 40 CFR 122 and 124, to include the appropriate conditions or limits to address demonstrated effluent toxicity based on newly available information, or to implement any EPA-approved new State water quality standards applicable to effluent toxicity.

d. This Order may be reopened for modification, or revocation and reissuance, as a result of the detection of a reportable priority pollutant generated by special conditions included in this Order. These special conditions may be, but are not limited to, fish tissue sampling, whole effluent toxicity, monitoring requirements on internal waste stream(s), and monitoring for surrogate parameters. Additional requirements may be included in this Order as a result of the special condition monitoring data.

e. This Order may be reopened to include an appropriate bioaccumulation based effluent limit for mercury if test results (as required in Attachment E of this Order) show that the concentration levels of methylmercury in the fish tissue are at or above 0.3 milligrams per kilogram.

f. This Order may be reopened to incorporate appropriate biosolids requirements if the State Water Resources Control Board and the Regional Water Board are given the authority to implement regulations contained in 40 CFR 503.

2. Special Studies, Technical Reports and Additional Monitoring Requirements

a. Within 60 days of the effective date of this Order, the Discharger shall notify the Executive Officer of its continued involvement with the comprehensive mercury investigation program currently being conducted by a group of Santa Ana River system dischargers. If the Discharger discontinues its involvement with this comprehensive program, the Discharger shall, within 60 days of that date, submit for the approval of the Executive Officer its plan for the annual testing of mercury levels in fish flesh samples collected from the Santa Ana River, upstream of, at, and downstream of the point of the discharge point. Upon approval, the Discharger shall implement the plan.

b. Toxicity Reduction Requirements.

1) Within 60 day of the effective date of this Order, the Discharger shall develop an Initial Investigation Toxicity Reduction Evaluation (IITRE) work plan that describes the steps the Discharger intends to follow if required by Toxicity Reduction Requirement 2), below. The work plan shall include at a minimum:

a) A description of the investigation and evaluation techniques that will be used to identify potential causes/sources of the exceedance, effluent variability, and/or efficiency of the treatment system in removing toxic substances. This shall include a description of an accelerated chronic toxicity testing program.

b) A description of the methods to be used for investigating and maximizing in-house treatment efficiency and good housekeeping practices.
c) A description of the evaluation process to be used to determine if implementation of a more detailed TRE\TIE is necessary.

2) The Discharger shall implement the IITRE work plan whenever the results of chronic toxicity tests of the effluent exceed:

   a) A two month median value of 1.0 TUc for survival or reproduction endpoint or,
   b) Any single test value of 1.7 TUc for survival endpoint.

3) Within 60 days of the effective date of this Order, the Discharger shall develop a detailed Toxicity Reduction Evaluation and Toxicity Identification Evaluation (TRE/TIE) work plan that shall describe the steps the Discharger intends to follow if the implemented IITRE fails to identify the cause of, or to rectify, the toxicity.

4) The Discharger shall use as guidance, at a minimum, EPA manuals EPA/600/2-88/070 (industrial), EPA/600/4-89-001A (municipal), EPA/600/6-91/005F (Phase I), EPA/600/R-92/080 (Phase II), and EPA-600/R-92/081 (Phase III) to identify the cause(s) of toxicity. If during the life of this Order the aforementioned EPA manuals are revised or updated, the revised/updated manuals may also be used as guidance. The detailed TRE/TIE work plan shall include:

   a) Further actions to investigate and identify the cause of toxicity;
   b) Actions the Discharger will take to mitigate the impact of the discharge and to prevent the recurrence of toxicity; and
   c) A schedule for these actions.

5) The Discharger shall implement the TRE/TIE workplan if the IITRE fails to identify the cause of, or rectify, the toxicity, or if in the opinion of the Executive Officer the IITRE does not adequately address an identified toxicity problem.

6) The Discharger shall assure that adequate resources are available to implement the required TRE/TIE.

3. Best Management Practices and Pollution Prevention

a. Pollutant Minimization Program

1) The Discharger shall develop and conduct a Pollutant Minimization Program (PMP) as further described below when there is evidence (e.g., sample results reported as DNQ when the effluent limitation is less than the MDL, sample results from analytical methods more sensitive than those methods required by this Order, presence of whole effluent toxicity, health advisories for fish consumption, results of benthic or aquatic organism tissue sampling) that a priority pollutant is present in the effluent above an effluent limitation and either:

   a) A sample result is reported as DNQ and the effluent limitation is less than the RL; or
   b) A sample result is reported as ND and the effluent limitation is less than the MDL.

2) The PMP shall include, but not be limited to, the following actions and submittals acceptable to the Regional Water Board:

   a) An annual review and annual monitoring of potential sources of the reportable priority pollutant(s), which may include fish tissue monitoring and other bio-uptake sampling;

   b) Annual monitoring for the reportable priority pollutant(s) in the influent to the wastewater treatment system;

   c) Submittal of a control strategy designed to proceed toward the goal of maintaining concentrations of the reportable priority pollutant(s) in the effluent at or below the effluent limitation;

   d) Implementation of appropriate cost-effective control measures for the reportable priority pollutant(s), consistent with the control strategy; and

   e) An annual status report to be sent to the Regional Water Board that includes:

      (1) All PMP monitoring results for the previous year;
      (2) A list of potential sources of the reportable priority pollutant(s);
      (3) A summary of all actions undertaken pursuant to the control strategy; and
      (4) A description of actions to be taken in the following year.

4. Construction, Operation and Maintenance Specifications

a. The Discharger's wastewater treatment plant shall be supervised and operated by persons possessing certificates of appropriate grade pursuant to Title 23, Division 3, Chapter 14, California Code of Regulations.

b. The Discharger shall provide safeguards to assure that should there be reduction, loss, or failure of electric power, the Discharger will comply with the requirements of this Order.

c. The Discharger shall update as necessary, the "Operation and Maintenance Manual (O&M Manual)" which it has developed for the treatment facility to conform to latest plant changes and requirements. The O&M Manual shall be readily available to operating personnel onsite. The O&M Manual shall include the following:

1) Description of the treatment plant table of organization showing the number of employees, their duties and qualifications, and plant attendance schedules (daily, weekends and holidays, part-time, etc.). The description should include documentation that the personnel are knowledgeable and qualified to operate the treatment facility so as to achieve the required level of treatment at all times.
2) Detailed description of safe and effective operation and maintenance of treatment processes, process control instrumentation and equipment.
3) Description of laboratory and quality assurance procedures.
4) Process and equipment inspection and maintenance schedules.
5) Description of safeguards to assure that, should there be reduction, loss, or failure of electric power, the Discharger will be able to comply with requirements of this Order.

6) Description of preventive (fail-safe) and contingency (response and cleanup) plans for controlling accidental discharges, and for minimizing the effect of such events. These plans shall identify the possible sources (such as loading and storage areas, power outage, waste treatment unit failure, process equipment failure, tank and piping failure) of accidental discharges, untreated or partially treated waste bypass, and polluted drainage.

5. Special Provisions for Municipal Facilities

a. Sewer Collection System Requirements:

The Discharger's collection system is part of the system that is subject to this Order. As such, the Discharger must properly operate and maintain its collection system (40 CFR 122.41(e)). The Discharger must report any non-compliance (40 CFR 122.41(l)(6) and (7)) and mitigate any discharge from the collection system in violation of this Order (40 CFR 122.41(d)). See the Order at Standard Provision VI.A.2.b. and Attachment D, sections I.D, V.E, V.H, and I.C.

Furthermore, the General Waste Discharge Requirements for Collection System Agencies (Order No. 2006-0003 DWQ) contains requirements for operation and maintenance of collection systems and for reporting and mitigating sanitary sewer overflows. While the Discharger must comply with both Order No. 2006-0003 DWQ and this Order, the General Collection System WDR more clearly and specifically stipulates requirements for operation and maintenance and for reporting and mitigating sanitary sewer overflows. The Discharger and other governmental agencies that are discharging wastewater into the facility are required to obtain enrollment for regulation under Order No. 2006-0003-DWQ.

b. Biosolids Disposal Requirements

1) Collected screenings, sludge, and other solids removed from liquid wastes shall be disposed of in a manner that is consistent with State Water Resources Control Board and California Department of Resources Recycling and Recovery's joint regulations (Title 27) of the California Code of Regulations and approved by the Regional Water Board's Executive Officer.

2) The use and disposal of biosolids shall comply with existing Federal and State laws and regulations, including permitting requirements and technical standards included in 40 CFR 503.

3) Any proposed change in biosolids use or disposal practice from a previously approved practice should be reported to the Executive Officer and USEPA Regional Administrator at least 90 days in advance of the change.

4) The Discharger shall take all reasonable steps to minimize or prevent any discharge or biosolids use or disposal that has the potential of adversely affecting human health or the environment.

VII. COMPLIANCE DETERMINATION

Compliance with the effluent limitations contained in Section IV of this Order will be determined as specified below:

A. General.
Compliance with effluent limitations for priority pollutants shall be determined using sample reporting protocols defined in the MRP and Attachment A of this Order. For purposes of reporting and administrative enforcement by the Regional and State Water Boards, the Discharger shall be deemed out of compliance with effluent limitations if the concentration of the priority pollutant in the monitoring sample is greater than the effluent limitation and greater than or equal to the minimum (ML).

B. Average Monthly Effluent Limitation (AMEL).
If the average, or when applicable, the median for multiple sample data (see subsection G, below), of daily discharges over a calendar month exceeds the AMEL for a given parameter, this will represent a single violation, though the Discharger may be considered out of compliance for each day of that month for that parameter (e.g., resulting in 31 days of non-compliance in a 31-day month). If only a single sample is taken during the calendar month and the analytical result for that sample exceeds the AMEL, the Discharger may be considered out of compliance for that calendar month. The Discharger will only be considered out of compliance for days when the discharge occurs. For any one calendar month during which no sample (daily discharge) is taken, no compliance determination can be made for that calendar month.

C. Average Weekly Effluent Limitation (AWEL).
If the average, or when applicable, the median for multiple sample data (see subsection G, below), of daily discharges over a calendar week exceeds the AWEL for a given parameter, this will represent a single violation, though the Discharger may be considered out of compliance for each day of that week for that parameter, resulting in 7 days of non-compliance. If only a single sample is taken during the calendar week and the analytical result for that sample exceeds the AWEL, the Discharger may be considered out of compliance for that calendar week. The Discharger will only be considered out of compliance for days when the discharge occurs. For any one calendar week during which no sample (daily discharge) is taken, no compliance determination can be made for that calendar week.

D. Maximum Daily Effluent Limitation (MDEL).
If a daily discharge exceeds the MDEL for a given parameter, the Discharger will be considered out of compliance for that parameter for that 1 day only within the reporting period. For any 1 day during which no sample is taken, no compliance determination can be made for that day.

E. Instantaneous Minimum Effluent Limitation.
If the analytical result of a single grab sample is lower than the instantaneous minimum effluent limitation for a parameter, the Discharger will be considered out of compliance for that parameter for that single sample. Non-compliance for each sample will be considered separately (e.g., the results of two grab samples taken within a calendar day that both are lower than the instantaneous minimum effluent limitation would result in two instances of non-compliance with the instantaneous minimum effluent limitation).

F. Instantaneous Maximum Effluent Limitation.
If the analytical result of a single grab sample is higher than the instantaneous maximum effluent limitation for a parameter, the Discharger may be considered out of compliance for that parameter for that single sample. Non-compliance for each sample may be considered separately (e.g., the results of two grab samples taken within a calendar day that both exceed the instantaneous maximum effluent limitation would result in two instances of non-compliance with the instantaneous maximum effluent limitation).

G. Multiple Sample Data.
When determining compliance with an AMEL for priority pollutants and more than one sample result is available, the Discharger shall compute the arithmetic mean unless the data set contains one or more reported determinations of "Detected, but Not Quantified" (DNQ) or "Not Detected" (ND). In those cases, the Discharger shall compute the median in place of the arithmetic mean in accordance with the following procedure:

1. The data set shall be ranked from low to high, ranking the reported ND determinations lowest, DNQ determinations next, followed by quantified values (if any). The order of the individual ND or DNQ determinations is unimportant.

2. The median value of the data set shall be determined. If the data set has an odd number of data points, then the median is the middle value. If the data set has an even number of data points, then the median is the average of the two values around the middle unless one or both of the points are ND or DNQ, in which case the median value shall be the lower of the two data points where DNQ is lower than a value and ND is lower than DNQ.

H. 12-Month Running Average Effluent Limitation.
Compliance with the 12-month running average limits under Effluent Limitations and Discharge Specifications IV.A.1.c., IV.B.2., and IV.C.1.b. shall be determined by the arithmetic mean of the last twelve monthly averages.

I. TDS Increment Limit.
Compliance with Effluent Limitations and Discharge Specifications IV.A.1.c.2., IV.B.2.b., and IV.C.1.b.2. may be determined by comparing the flow weighted TDS quality of the influent or secondary effluent to the flow weighted TDS water supply quality.

J. Priority Pollutants.

The Discharger shall be deemed out of compliance with an effluent limitation if the concentration of the priority pollutant in the monitoring sample is greater than the effluent limitation.

1. Compliance determination shall be based on the reporting level selected from minimum level (ML)[6] specified in Attachment "I" of this Order, unless an alternative reporting level is approved by the Regional Water Board's Executive Officer. When there is more than one ML value for a given substance, the Discharger shall select the ML value that is below the calculated effluent limitation, and use its associated analytical method, listed in Attachment "I" of this Order. If no ML value is below the effluent limitation, then the Regional Water Board will select as the reporting level the lowest ML value and its associated analytical method.

2. When determining compliance with an average monthly limit and more than one sample result is available in a month, the Discharger shall compute the arithmetic mean unless the data set contains one or more reported determinations of detected but not quantified (DNQ) or not detected (ND). In those cases, the Discharger shall compute the median in place of the arithmetic mean in accordance with the following procedure:

   a. The data set shall be ranked from low to high, reported ND determinations lowest, DNQ determinations next, followed by quantified values (if any). The order of the individual ND or DNQ determinations is unimportant.

   b. The median value of the data set shall be determined. If the data set has an odd number of data points, then the median is the middle value. If the data set has an even number of data points, then the median is the average of the two values around the middle unless one or both of the points are ND or DNQ, in which case the median value shall be the lower of the two data points where DNQ is lower than a value and ND is lower than DNQ. If a sample result, or the arithmetic mean or median of multiple sample results, is below the reporting level, and there is evidence that the priority pollutant is present in the effluent above an effluent limitation and the Discharger conducts a pollutant minimization program (PMP)[7], the Discharger shall not be deemed out of compliance.

---

[6] *Minimum level is the concentration at which the entire analytical system must give a recognizable signal and acceptable point. The ML is the concentration in a sample that is equivalent to the concentration of the lowest calibration standard analyzed by a specific analytical procedure, assuming that all the method specified sample weights, volumes, and processing steps have been followed.*

[7] *The goal of the PMP shall be to reduce all potential sources of a priority pollutant(s) through pollutant minimization (control) strategies, including pollution prevention measures as appropriate, to maintain the effluent concentration at or below the water quality-based effluent limitation.*

K. Compliance Determination

Compliance determinations shall be based on available analyses for the time interval associated with the effluent limitation. Where only one sample analysis is available in a specified time interval (e. g., monthly or weekly average), that sample shall serve to characterize the discharge for the entire interval. If quarterly sample results show noncompliance with the average monthly limit and that sample result is used for compliance determinations for each month of the quarter, then three separate violations of the average monthly limit shall be deemed to have occurred.

Compliance with a single effluent limitation which applies to a group of chemicals (e.g., PCBs), based on a single sample shall be determined by considering the concentrations of individual members of the group to be zero if the analytical response for the individual chemical falls below the method detection limit (MDL) for that chemical.

ATTACHMENT A – DEFINITIONS

Arithmetic Mean (μ), also called the average, is the sum of measured values divided by the number of samples. For ambient water concentrations, the arithmetic mean is calculated as follows:

Arithmetic mean = $\mu = \Sigma x / n$
where: Σx is the sum of the measured ambient water concentrations, and
n is the number of samples.

Average Monthly Effluent Limitation (AMEL): the highest allowable average of daily discharges over a calendar month, calculated as the sum of all daily discharges measured during a calendar month divided by the number of daily discharges measured during that month.

Average Weekly Effluent Limitation (AWEL): the highest allowable average of daily discharges over a calendar week (Sunday through Saturday), calculated as the sum of all daily discharges measured during a calendar week divided by the number of daily discharges measured during that week.

Best Management Practices (BMPs) are methods, measures, or practices designed and selected to reduce or eliminate the discharge of pollutants to surface waters from point and nonpoint source discharges including storm water. BMPs include structural and non-structural controls, and operation and maintenance procedures, which can be applied before, during, and/or after pollution producing activities.

Bioaccumulative pollutants are those substances taken up by an organism from its surrounding medium through gill membranes, epithelial tissue, or from food and subsequently concentrated and retained in the body of the organism.

Carcinogenic pollutants are substances that are known to cause cancer in living organisms.

Daily Discharge: Daily Discharge is defined as either: (1) the total mass of the constituent discharged over the calendar day (12:00 am through 11:59 pm) or any 24-hour period that reasonably represents a calendar day for purposes of sampling (as specified in the permit), for a constituent with limitations expressed in units of mass or; (2) the unweighted arithmetic mean measurement of the constituent over the day for a constituent with limitations expressed in other units of measurement (e.g., concentration).

The daily discharge may be determined by the analytical results of a composite sample taken over the course of one day (a calendar day or other 24-hour period defined as a day) or by the arithmetic mean of analytical results from one or more grab samples taken over the course of the day.

Detected, but Not Quantified (DNQ) are those sample results less than the RL, but greater than or equal to the laboratory's MDL.

Estimated Chemical Concentration is the estimated chemical concentration that results from the confirmed detection of the substance by the analytical method below the ML value.

Existing Discharger means any discharger that is not a new discharger. An existing discharger includes an "increasing discharger" (i.e., an existing facility with treatment systems in place for its current discharge that is or will be expanding, upgrading, or modifying its existing permitted discharge after the effective date of this Policy).

Infeasible means not capable of being accomplished in a successful manner within a reasonable period of time, taking into account economic, environmental, legal, social, and technological factors.

Inland Surface Waters are all surface waters of the State that do not include the ocean, enclosed bays, or estuaries.

Instantaneous Maximum Effluent Limitation: the highest allowable value for any single grab sample or aliquot (i.e., each grab sample or aliquot is independently compared to the instantaneous maximum limitation).

Instantaneous Minimum Effluent Limitation: the lowest allowable value for any single grab sample or aliquot (i.e., each grab sample or aliquot is independently compared to the instantaneous minimum limitation).

Maximum Daily Flow is the maximum flow sample of all samples collected in a calendar day.

Maximum Daily Effluent Limitation (MDEL) means the highest allowable daily discharge of a pollutant, over a calendar day (or 24-hour period). For pollutants with limitations expressed in units of mass, the daily discharge is calculated as the total mass of the pollutant discharged over the day. For pollutants with limitations expressed in other units of measurement, the daily discharge is calculated as the arithmetic mean measurement of the pollutant over the day.

MEC: Maximum Effluent Concentration.

Median is the middle measurement in a set of data. The median of a set of data is found by first arranging the measurements in order of magnitude (either increasing or decreasing order). If the number of measurements (n) is odd, then the median = $X_{(n+1)/2}$. If n is even, then the median = $(X_{n/2} + X_{(n/2)+1})/2$ (i.e., the midpoint between the $n/2$ and $n/2+1$).

Method Detection Limit (MDL) is the minimum concentration of a substance that can be measured and reported with 99 percent confidence that the analyte concentration is greater than zero, as defined in 40 CFR 136, Appendix B, revised as of May 14, 1999.

Monthly Averages is the highest allowable average of daily discharges over a calendar month, calculated as the sum of all daily discharges measured during a calendar month divided by the number of daily discharges measured during that month. For TDS and TIN determination, the monthly averages shall be flow weighted.

Minimum Level (ML) is the concentration at which the entire analytical system must give a recognizable signal and acceptable calibration point. The ML is the concentration in a sample that is equivalent to the concentration of the lowest calibration standard analyzed by a specific analytical procedure, assuming that all the method specified sample weights, volumes, and processing steps have been followed.

Not Detected (ND) are those sample results less than the laboratory's MDL.

Persistent pollutants are substances for which degradation or decomposition in the environment is nonexistent or very slow.

Pollutant Minimization Program (PMP) means waste minimization and pollution prevention actions that include, but are not limited to, product substitution, waste stream recycling, alternative waste management methods, and education of the public and businesses. The goal of the PMP shall be to reduce all potential sources of a priority pollutant(s) through pollutant minimization (control) strategies, including pollution prevention measures as appropriate, to maintain the effluent concentration at or below the water quality-based effluent limitation. Pollution prevention measures may be particularly appropriate for persistent bioaccumulative priority pollutants where there is evidence that beneficial uses are being impacted. The Regional Water Board may consider cost-effectiveness when establishing the requirements of a PMP. The completion and implementation of a Pollution Prevention Plan, if required pursuant to CWC Section 13263.3(d), shall be considered to fulfill the PMP requirements. The following reporting protocols and definitions are used in determining the need to conduct a Pollution Minimization Program (PMP). Reporting protocols in the Monitoring and Reporting Program, Attachment E, Section X.B.4 describe sample results that are to be reported as Detected but Not Quantified (DNQ) or Not Detected (ND). Definitions for a Minimum Level (ML) and Method Detection Limit (MDL) are provided in Attachment A. A Reporting Level (RL) is the ML associated with an analytical method selected by the Discharger that is authorized for monitoring effluent limitations under this Order.

Pollution Prevention means any action that causes a net reduction in the use or generation of a hazardous substance or other pollutant that is discharged into water and includes, but is not limited to, input change, operational improvement, production process change, and product reformulation (as defined in Water Code Section 13263.3). Pollution prevention does not include actions that merely shift a pollutant in wastewater from one environmental medium to another environmental medium, unless clear environmental benefits of such an approach are identified to the satisfaction of the SWRCB or RWQCB.

Process Optimization means minor changes to the existing facility and treatment plant operations that optimize the effectiveness of the existing treatment processes.

Public Entity includes the federal government or a state, county, city and county, city, district, public authority, or public agency.

Reporting Level (RL) is the ML corresponding to an approved analytical method for reporting a sample result that is selected either from Appendix 4 of the SIP by the Regional Water Board in accordance with Section 2.4.2 of the SIP or established in accordance with Section 2.4.3 of the SIP. The ML is based on the proper application of method-based analytical procedures for sample preparation and the absence of any matrix interferences. Other factors may be applied to the ML depending on the specific sample preparation steps employed. For example, the treatment typically applied in cases where there are matrix-effects is to dilute the sample or sample aliquot by a factor of ten. In such cases, this additional factor must be applied to the ML in the computation of the RL.

Source of Drinking Water is any water designated as municipal or domestic supply (MUN) in a RWQCB basin plan.

ATTACHMENT B – VICINITY MAP

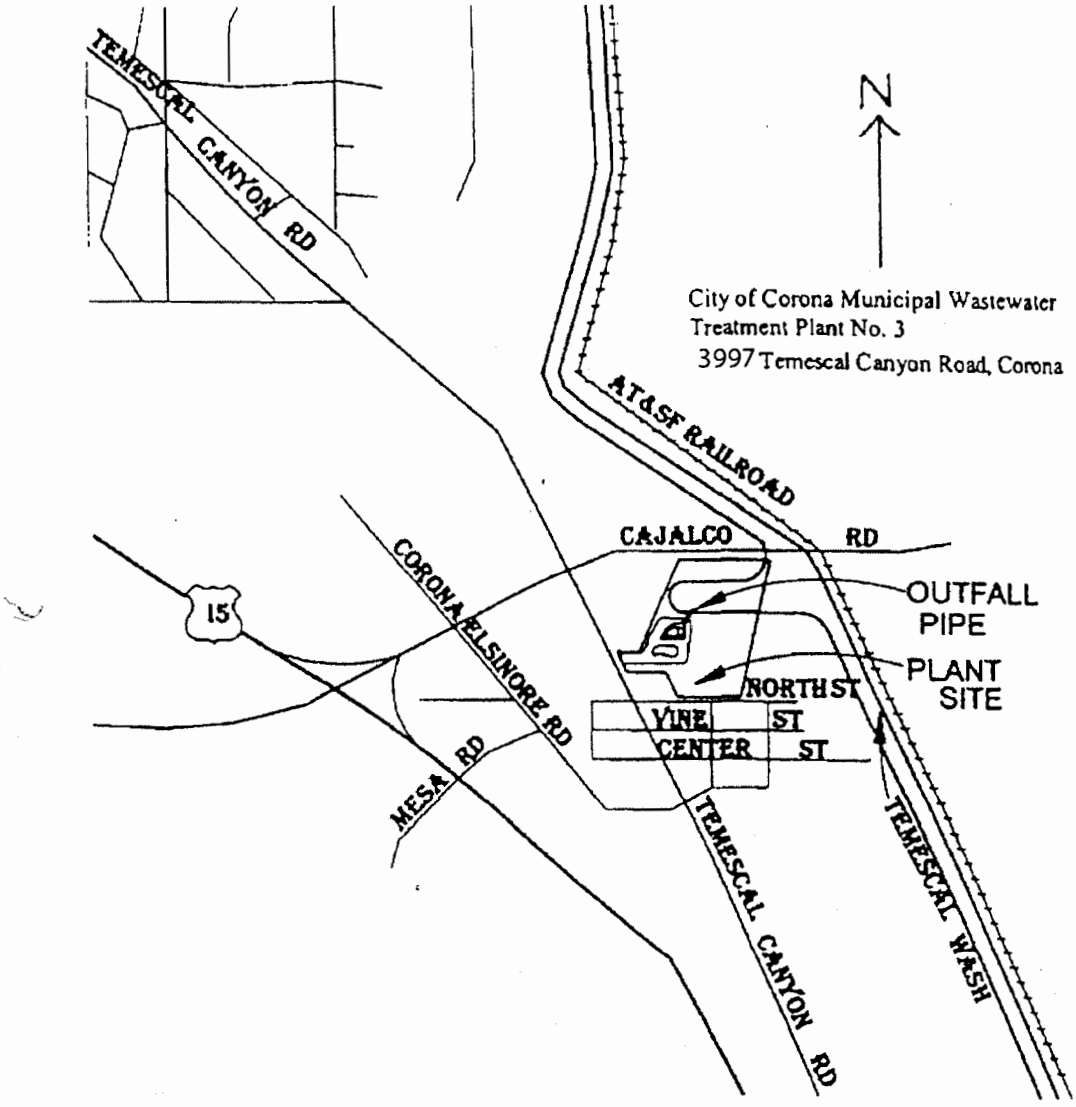

ATTACHMENT C – FLOW SCHEMATIC

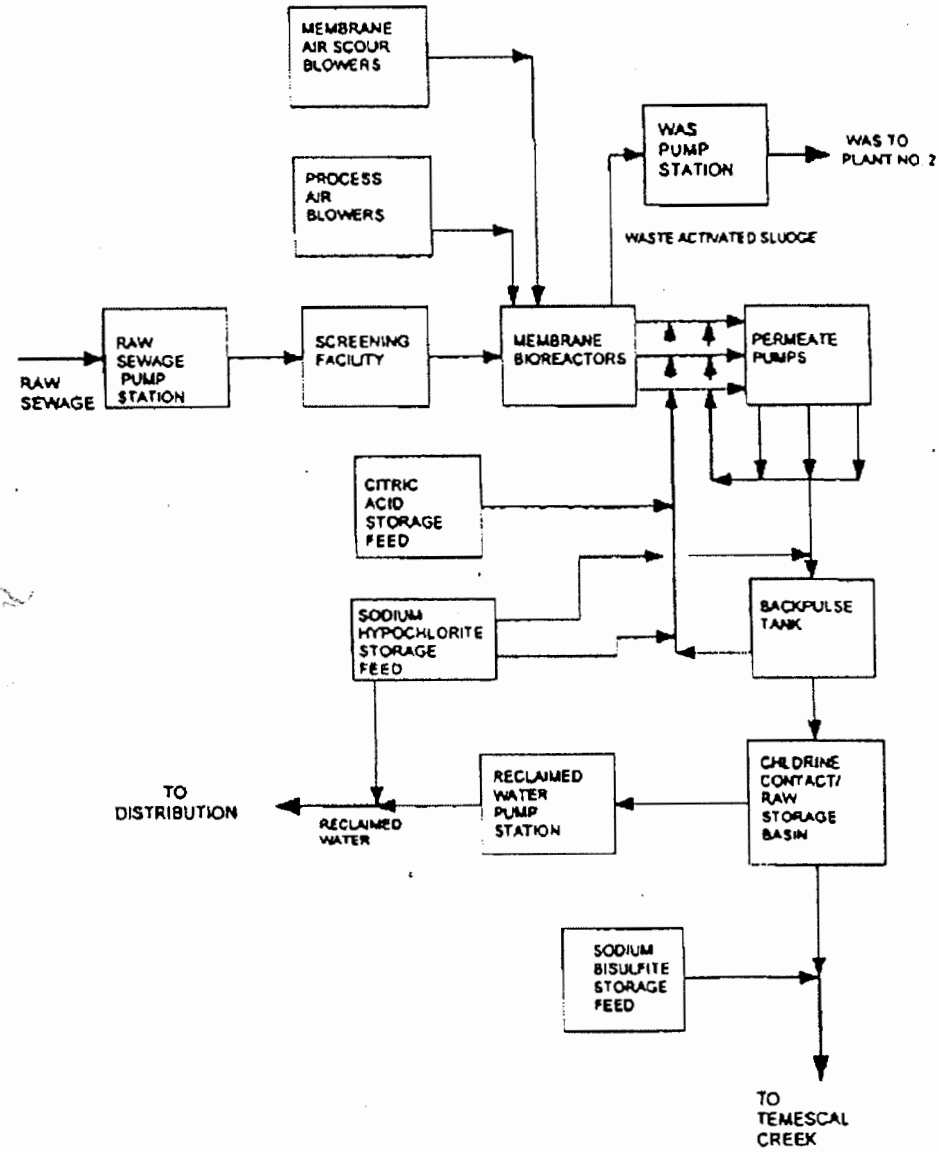

ATTACHMENT D – STANDARD PROVISIONS

I. STANDARD PROVISIONS – PERMIT COMPLIANCE

A. Duty to Comply

1. The Discharger must comply with all of the conditions of this Order. Any noncompliance constitutes a violation of the Clean Water Act (CWA) and the California Water Code (CWC) and is grounds for enforcement action, for permit termination, revocation and reissuance, or modification; or denial of a permit renewal application [*40 CFR §122.41(a)*].

2. The Discharger shall comply with effluent standards or prohibitions established under Section 307(a) of the CWA for toxic pollutants and with standards for sewage sludge use or disposal established under Section 405(d) of the CWA within the time provided in the regulations that establish these standards or prohibitions, even if this Order has not yet been modified to incorporate the requirement [*40 CFR §122.41(a)(1)*].

B. Need to Halt or Reduce Activity Not a Defense

It shall not be a defense for a Discharger in an enforcement action that it would have been necessary to halt or reduce the permitted activity in order to maintain compliance with the conditions of this Order [*40 CFR §122.41(c)*].

C. Duty to Mitigate

The Discharger shall take all reasonable steps to minimize or prevent any discharge or sludge use or disposal in violation of this Order that has a reasonable likelihood of adversely affecting human health or the environment [*40 CFR §122.41(d)*].

D. Proper Operation and Maintenance

The Discharger shall at all times properly operate and maintain all facilities and systems of treatment and control (and related appurtenances) which are installed or used by the Discharger to achieve compliance with the conditions of this Order. Proper operation and maintenance also includes adequate laboratory controls and appropriate quality assurance procedures. This provision requires the operation of backup or auxiliary facilities or similar systems that are installed by a Discharger only when necessary to achieve compliance with the conditions of this Order [*40 CFR §122.41(e)*].

E. Property Rights

1. This Order does not convey any property rights of any sort or any exclusive privileges [*40 CFR §122.41(g)*].

2. The issuance of this Order does not authorize any injury to persons or property or invasion of other private rights, or any infringement of State or local law or regulations [*40 CFR §122.5(c)*].

F. Inspection and Entry

The Discharger shall allow the Regional Water Quality Control Board (RWQCB), State Water Resources Control Board (SWRCB), United States Environmental Protection Agency (USEPA), and/or their authorized representatives (including an authorized contractor acting as their representative), upon the presentation of credentials and other documents, as may be required by law, to [*40 CFR §122.41(i)*] [*CWC 13383(c)*]:

1. Enter upon the Discharger's premises where a regulated facility or activity is located or conducted, or where records are kept under the conditions of this Order [*40 CFR §122.41(i)(1)*];

2. Have access to and copy, at reasonable times, any records that must be kept under the conditions of this Order [*40 CFR §122.41(i)(2)*];

3. Inspect and photograph, at reasonable times, any facilities, equipment (including monitoring and control equipment), practices, or operations regulated or required under this Order [*40 CFR §122.41(i)(3)*];

4. Sample or monitor, at reasonable times, for the purposes of assuring Order compliance or as otherwise authorized by the CWA or the CWC, any substances or parameters at any location [*40 CFR §122.41(i)(4)*].

G. Bypass

1. Definitions

   a. "Bypass" means the intentional diversion of waste streams from any portion of a treatment facility [*40 CFR §122.41(m)(1)(i)*].

   b. "Severe property damage" means substantial physical damage to property, damage to the treatment facilities, which causes them to become inoperable, or substantial and permanent loss of natural resources that can reasonably be expected to occur in the absence of a bypass. Severe property damage does not mean economic loss caused by delays in production [*40 CFR §122.41(m)(1)(ii)*].

2. Bypass not exceeding limitations – The Discharger may allow any bypass to occur which does not cause exceedances of effluent limitations, but only if it is for essential maintenance to assure efficient operation. These bypasses are not subject to the provisions listed in Standard Provisions – Permit Compliance I.G.3, I.G.4, and I.G.5 below [*40 CFR §122.41(m)(2)*].

3. Prohibition of bypass – Bypass is prohibited, and the Regional Water Board may take enforcement action against a Discharger for bypass, unless [*40 CFR §122.41(m)(4)(i)*]:

    a. Bypass was unavoidable to prevent loss of life, personal injury, or severe property damage [*40 CFR §122.41(m)(4)(A)*];

    b. There were no feasible alternatives to the bypass, such as the use of auxiliary treatment facilities, retention of untreated wastes, or maintenance during normal periods of equipment downtime. This condition is not satisfied if adequate back-up equipment should have been installed in the exercise of reasonable engineering judgment to prevent a bypass that occurred during normal periods of equipment downtime or preventive maintenance [*40 CFR §122.41(m)(4)(B)*]; and

    c. The Discharger submitted notice to the Regional Water Board as required under Standard Provisions – Permit Compliance I.G.5 below [*40 CFR §122.41(m)(4)(C)*].

4. The Regional Water Board may approve an anticipated bypass, after considering its adverse effects, if the Regional Water Board determines that it will meet the three conditions listed in Standard Provisions – Permit Compliance I.G.3 above [*40 CFR §122.41(m)(4)(ii)*].

5. Notice

    a. Anticipated bypass. If the Discharger knows in advance of the need for a bypass, it shall submit a notice, if possible at least 10 days before the date of the bypass [*40 CFR §122.41(m)(3)(i)*].

    b. Unanticipated bypass. The Discharger shall submit notice of an unanticipated bypass as required in Standard Provisions - Reporting V.E below (24-hour notice) [*40 CFR Section 122.41(m)(3)(ii)*].

H. Upset

Upset means an exceptional incident in which there is unintentional and temporary noncompliance with technology based permit effluent limitations because of factors beyond the reasonable control of the permittee. An upset does not include noncompliance to the extent caused by operational error, improperly designed treatment facilities, inadequate treatment facilities, lack of preventive maintenance, or careless or improper operation [*40 CFR §122.41(n)(1)*].

1. Effect of an upset. An upset constitutes an affirmative defense to an action brought for noncompliance with such technology based permit effluent limitations if the requirements of Standard Provisions – Permit Compliance I.H.2 below are met. No determination made during administrative review of claims that noncompliance was caused by upset, and before an action for noncompliance, is final administrative action subject to judicial review [*40 CFR Section 122.41(n)(2)*].

2. Conditions necessary for a demonstration of upset. A Discharger who wishes to establish the affirmative defense of upset shall demonstrate, through properly signed, contemporaneous operating logs or other relevant evidence that [*40 CFR §122.41(n)(3)*]:

   a. An upset occurred and that the Discharger can identify the cause(s) of the upset [*40 CFR §122.41(n)(3)(i)*];

   b. The permitted facility was, at the time, being properly operated [*40 CFR §122.41(n)(3)(i)*];

   c. The Discharger submitted notice of the upset as required in Standard Provisions – Reporting V.E.2.b below (24-hour notice) [*40 CFR Section 122.41(n)(3)(iii)*]; and

   d. The Discharger complied with any remedial measures required under Standard Provisions – Permit Compliance I.C above [*40 CFR §122.41(n)(3)(iv)*].

3. Burden of proof. In any enforcement proceeding, the Discharger seeking to establish the occurrence of an upset has the burden of proof [*40 CFR §122.41(n)(4)*].

II. STANDARD PROVISIONS – PERMIT ACTION

A. General

This Order may be modified, revoked and reissued, or terminated for cause. The filing of a request by the Discharger for modification, revocation and reissuance, or termination, or a notification of planned changes or anticipated noncompliance does not stay any Order condition [*40 CFR §122.41(f)*].

B. Duty to Reapply

If the Discharger wishes to continue an activity regulated by this Order after the expiration date of this Order, the Discharger must apply for and obtain a new permit [*40 CFR §122.41(b)*].

C. Transfers

This Order is not transferable to any person except after notice to the Regional Water Board. The Regional Water Board may require modification or revocation and reissuance of the Order to change the name of the Discharger and incorporate such other requirements as may be necessary under the CWA and the CWC [*40 CFR §122.41(l)(3)*] [*40 CFR §122.61*].

III. STANDARD PROVISIONS – MONITORING

A. Samples and measurements taken for the purpose of monitoring shall be representative of the monitored activity [*40 CFR §122.41(j)(1)*].

B. Monitoring results must be conducted according to test procedures under 40 CFR Part 136 or, in the case of sludge use or disposal, approved under 40 CFR Part 136 unless otherwise specified in 40 CFR Part 503 unless other test procedures have been specified in this Order [*40 CFR §122.41(j)(4)*] [*40 CFR §122.44(i)(1)(iv)*].

IV. STANDARD PROVISIONS – RECORDS

A. Except for records of monitoring information required by this Order related to the Discharger's sewage sludge use and disposal activities, which shall be retained for a period of at least five years (or longer as required by 40 CFR Part 503), the Discharger shall retain records of all monitoring information, including all calibration and maintenance records and all original strip chart recordings for continuous monitoring instrumentation, copies of all reports required by this Order, and records of all data used to complete the application for this Order, for a period of at least three (3) years from the date of the sample, measurement, report or application. This period may be extended by request of the Regional Water Board Executive Officer at any time [*40 CFR §122.41(j)(2)*].

B. Records of monitoring information shall include:

1. The date, exact place, and time of sampling or measurements [*40 CFR §122.41(j)(3)(i)*];
2. The individual(s) who performed the sampling or measurements [*40 CFR §122.41(j)(3)(ii)*];
3. The date(s) analyses were performed [*40 CFR §122.41(j)(3)(iii)*];
4. The individual(s) who performed the analyses [*40 CFR §122.41(j)(3)(iv)*];
5. The analytical techniques or methods used [*40 CFR §122.41(j)(3)(v)*]; and
6. The results of such analyses [*40 CFR §122.41(j)(3)(vi)*].

C. Claims of confidentiality for the following information will be denied [*40 CFR §122.7(b)*]:

1. The name and address of any permit applicant or Discharger [*40 CFR §122.7(b)(1)*]; and
2. Permit applications and attachments, permits and effluent data [*40 CFR §122.7(b)(2)*].

V. STANDARD PROVISIONS – REPORTING

A. Duty to Provide Information

The Discharger shall furnish to the Regional Water Board, SWRCB, or USEPA within a reasonable time, any information which the Regional Water Board, SWRCB, or USEPA may request to determine whether cause exists for modifying, revoking and reissuing, or terminating this Order or to determine compliance with this Order. Upon request, the Discharger shall also furnish to the Regional Water Board, SWRCB, or USEPA copies of records required to be kept by this Order [*40 CFR §122.41(h)*] [*CWC 13267*].

B. Signatory and Certification Requirements

1. All applications, reports, or information submitted to the Regional Water Board, State Water Board, and/or USEPA shall be signed and certified in accordance with Standard Provisions – Reporting V.B.2, V.B.3, V.B.4, and V.B.5 below [*40 CFR Section 122.41(k)*].

2. All permit applications shall be signed by either a principal executive officer or ranking elected official. For purposes of this provision, a principal executive officer of a federal agency includes: (i) the chief executive officer of the agency, or (ii) a senior executive officer having responsibility for the overall operations of a principal geographic unit of the agency (e.g., Regional Administrators of USEPA) [40 CFR Section 122.22(a)(3)].

3. All reports required by this Order and other information requested by the Regional Water Board, State Water Board, or USEPA shall be signed by a person described in Standard Provisions – Reporting V.B.2 above, or by a duly authorized representative of that person. A person is a duly authorized representative only if:

   a. The authorization is made in writing by a person described in Standard Provisions – Reporting V.B.2 above [*40 CFR Section 122.22(b)(1)*];

   b. The authorization specified either an individual or a position having responsibility for the overall operation of the regulated facility or activity such as the position of plant manager, operator of a well or a well field, superintendent, position of equivalent responsibility, or an individual or position having overall responsibility for environmental matters for the company (A duly authorized representative may thus be either a named individual or any individual occupying a named position.) [*40 CFR Section 122.22(b)(2)*]; and

   c. The written authorization is submitted to the Regional Water Board and State Water Board [*40 CFR Section 122.22(b)(3)*].

4. If an authorization under Standard Provisions – Reporting V.B.3 above is no longer accurate because a different individual or position has responsibility for the overall operation of the facility, a new authorization satisfying the requirements of Standard Provisions – Reporting V.B.3 above must be submitted to the Regional Water Board, State Water Board or USEPA prior to or together with any reports, information, or applications, to be signed by an authorized representative [40 CFR Section 122.22(c)].

5. Any person signing a document under Standard Provisions – Reporting V.B.2 or V.B.3 above shall make the following certification:

   "I certify under penalty of law that this document and all attachments were prepared under my direction or supervision in accordance with a system designed to assure that qualified personnel properly gather and evaluate the information submitted. Based on my inquiry of the person or persons who manage the system or those persons directly responsible for gathering the information, the information submitted is, to the best of my knowledge and belief, true, accurate, and complete. I am aware that there are significant penalties for submitting false information, including the possibility of fine and imprisonment for knowing violations" [*40 CFR Section 122.22(d)*].

C. Monitoring Reports

1. Monitoring results shall be reported at the intervals specified in the Monitoring and Reporting Program (Attachment E) in this Order [*40 CFR §122.41(l)(4)*].

2. Monitoring results must be reported on a Discharge Monitoring Report (DMR) form or forms provided or specified by the Regional Water Board or SWRCB for reporting results of monitoring of sludge use or disposal practices [*40 CFR §122.41(l)(4)(i)*].

3. If the Discharger monitors any pollutant more frequently than required by this Order using test procedures approved under 40 CFR Part 136 or, in the case of sludge use or disposal, approved under 40 CFR Part 136 unless otherwise specified in 40 CFR Part 503, or as specified in this Order, the results of this monitoring shall be included in the calculation and reporting of the data submitted in the DMR or sludge reporting form specified by the Regional Water Board [*40 CFR §122.41(l)(4)(ii)*].

4. Calculations for all limitations, which require averaging of measurements, shall utilize an arithmetic mean unless otherwise specified in this Order [*40 CFR §122.41(l)(4)(iii)*].

D. Compliance Schedules

Reports of compliance or noncompliance with, or any progress reports on, interim and final requirements contained in any compliance schedule of this Order, shall be submitted no later than 14 days following each schedule date [*40 CFR §122.41(l)(5)*].

E. Twenty-Four Hour Reporting

1. The Discharger shall report any noncompliance that may endanger health or the environment. Any information shall be provided orally within 24 hours from the time the Discharger becomes aware of the circumstances. A written submission shall also be provided within five (5) days of the time the Discharger becomes aware of the circumstances. The written submission shall contain a description of the noncompliance and its cause; the period of noncompliance, including exact dates and times, and if the noncompliance has not been corrected, the anticipated time it is expected to continue; and steps taken or planned to reduce, eliminate, and prevent reoccurrence of the noncompliance [*40 CFR §122.41(l)(6)(i)*].

2. The following shall be included as information that must be reported within 24 hours under this paragraph [*40 CFR §122.41(l)(6)(ii)*]:

   a. Any unanticipated bypass that exceeds any effluent limitation in this Order [*40 CFR §122.41(l)(6)(ii)(A)*].

   b. Any upset that exceeds any effluent limitation in this Order [*40 CFR §122.41(l)(6)(ii)(B)*].

3. The Regional Water Board may waive the above-required written report under this provision on a case-by-case basis if an oral report has been received within 24 hours [*40 CFR §122.41(l)(6)(iii)*].

F. Planned Changes

The Discharger shall give notice to the Regional Water Board as soon as possible of any planned physical alterations or additions to the permitted facility. Notice is required under this provision only when [*40 CFR §122.41(l)(1)*]:

1. The alteration or addition to a permitted facility may meet one of the criteria for determining whether a facility is a new source in 40 CFR §122.29(b) [*40 CFR §122.41(l)(1)(i)*]; or

2. The alteration or addition could significantly change the nature or increase the quantity of pollutants discharged. This notification applies to pollutants which are subject neither to effluent limitations in this Order nor to notification requirements under 40 CFR Part 122.42(a)(1) (see Additional Provisions—Notification Levels VII.A.1) [*40 CFR §122.41(l)(1)(ii)*].

3. The alteration or addition results in a significant change in the Discharger's sludge use or disposal practices, and such alteration, addition, or change may justify the application of permit conditions that are different from or absent in the existing permit, including notification of additional use or disposal sites not reported during the permit application process or not reported pursuant to an approved land application plan [*40 CFR §122.41(l)(1)(iii)*].

G. Anticipated Noncompliance

The Discharger shall give advance notice to the Regional Water Board or SWRCB of any planned changes in the permitted facility or activity that may result in noncompliance with General Order requirements [*40 CFR §122.41(l)(2)].*

H. Other Noncompliance

The Discharger shall report all instances of noncompliance not reported under Standard Provisions – Reporting V.C, V.D, and V.E above at the time monitoring reports are submitted. The reports shall contain the information listed in Standard Provision – Reporting V.E above [*40 CFR Section 122.41(l)(7)*].

I. Other Information

When the Discharger becomes aware that it failed to submit any relevant facts in a permit application, or submitted incorrect information in a permit application or in any report to the Regional Water Board, SWRCB, or USEPA, the Discharger shall promptly submit such facts or information [*40 CFR §122.41(l)(8)*].

VI. STANDARD PROVISIONS – ENFORCEMENT

A. The Regional Water Board is authorized to enforce the terms of this permit under several provisions of the CWC, including, but not limited to, sections 13385, 13386, and 13387.

VII. ADDITIONAL PROVISIONS – NOTIFICATION LEVELS

A. Publicly-Owned Treatment Works (POTWs)

All POTWs shall provide adequate notice to the Regional Water Board of the following [*40 CFR Section 122.42(b)*]:

1. Any new introduction of pollutants into the POTW from an indirect discharger that would be subject to Sections 301 or 306 of the CWA if it were directly discharging those pollutants [*40 CFR Section 122.42(b)(1)*]; and

2. Any substantial change in the volume or character of pollutants being introduced into that POTW by a source introducing pollutants into the POTW at the time of adoption of the Order [*40 CFR Section 122.42(b)(2)*].

3. Adequate notice shall include information on the quality and quantity of effluent introduced into the POTW as well as any anticipated impact of the change on the quantity or quality of effluent to be discharged from the POTW [*40 CFR Section 122.42(b)(3)*].

Attachment E – Monitoring and Reporting Program

Table of Contents

I. General Monitoring Provisions E-2
II. Monitoring Locations E-7
III. Influent Monitoring Requirements E-7
IV. Effluent Monitoring Requirements E-8
V. Whole Effluent Toxicity Testing Requirements E-9
VI. Land Discharge Monitoring Requirements - Not applicable E-11
VII. Recycled Water Monitoring Requirements E-11
A. Monitoring for Discharge Point 002 ..... E-11
B. Monitoring Reclaimed Water Users E-12
VIII. Receiving Water Monitoring Requirements E-12
A. Regional Monitoring for Fish Flesh Testing E-12
IX. Other Monitoring Requirements E-13
A. Biosolids Monitoring E-13
B. Water Supply Monitoring E-13
X. Reporting Requirements E-13
A. General Monitoring and Reporting Requirements E-13
B. Self-Monitoring Reports (SMRs) E-15
C. Discharge Monitoring Reports (DMRs) E-17
D. Other Reports E-18

Attachment E – Monitoring and Reporting Program

California Water Code sections 13267 and 13383 authorize the Regional Water Board to require technical and monitoring reports. The Code of Federal Regulations (CFR) at 40 CFR 122.48 requires that all NPDES permits specify monitoring and reporting requirements. This Monitoring and Reporting Program establishes monitoring and reporting requirements that implement the state and federal regulations.

I. GENERAL MONITORING PROVISIONS

1. All sampling and sample preservation shall be in accordance with the current edition of "*Standard Methods for the Examination of Water and Wastewater*" (American Public Health Association).

2. All laboratory analyses shall be performed in accordance with test procedures under 40 CFR 136 "Guidelines Establishing Test Procedures for the Analysis of Pollutants," promulgated by the United States Environmental Protection Agency (USEPA), unless otherwise specified in this MRP. In addition, the Regional Water Board and/or USEPA, at their discretion, may specify test methods that are more sensitive than those specified in 40 CFR 136. (See also I.7., below)

3. Chemical, bacteriological, and bioassay analyses shall be conducted at a laboratory certified for such analyses by the California Department of Public Health in accordance with Water Code Section 13176, and must include quality assurance/quality control data with the reports, or at laboratories approved by the Regional Water Board's Executive Officer or the USEPA.

4. Whenever the Discharger monitors any pollutant more frequently than is required by this Order, the results of this monitoring shall be included in the calculation and reporting of the data submitted in the discharge monitoring report specified by the Executive Officer.

5. In conformance with federal regulations 40 CFR 122.45(c), analyses to determine compliance with the effluent limitations for metals shall be conducted using the total recoverable method. For Chromium (VI), the dissolved method in conformance with 40 CFR 136 may be used to measure compliance with the Chromium (VI) limitation.

6. The Discharger shall have, and implement an acceptable written quality assurance plan (QAP) for laboratory analyses. Duplicate chemical analyses must be conducted on a minimum of ten percent (10%) of the samples, or at least one sample per month, whichever is greater. A similar frequency shall be maintained for analyzing spiked samples. When requested by the Regional Board of USEPA, the Discharger will participate in the NPDES discharge monitoring report Quality Assurance performance study.

7. For effluent monitoring:

   a. The Discharger shall require its testing laboratory to calibrate the analytical system down to the minimum level (ML)[1] specified in Attachment "H" for priority pollutants, unless an alternative minimum level is approved by the Regional Water Board's Executive Officer. When there is more than one ML value for a given substance, the discharger shall use the ML values, and their associated analytical methods listed in Attachment "H" that are below the effluent limitation. For analysis of priority pollutants without effluent limitations, the Discharger shall use an ML value that is below the trigger values listed in Attachment "I". If no ML value is below the effluent limitation, or the trigger value listed in Attachment "I", then the lowest ML and associated analytical method shall be used. Any internal quality control data associated with the sample must be reported when requested by the Executive Officer. The Regional Water Board will reject the quantified laboratory data if quality control data is unavailable or unacceptable.

   b. The discharger shall report the results of analytical determinations for the presence of chemical constituents in a sample using the following reporting protocols:

      1) Sample results greater than or equal to the reported ML shall be reported as measured by the laboratory (i.e., the measured chemical concentration in the sample).

      2) Sample results less than the reported ML, but greater than or equal to the laboratory's current Method Detection Limit (MDL)[2], shall be reported as "Detected, but Not Quantified," or "DNQ." The estimated chemical concentration of the sample shall also be reported.

      3) Sample results not detected above the laboratory's MDL shall be reported as "not detected" or "ND."

---

1 *Minimum level is the concentration at which the entire analytical system must give a recognizable signal and acceptable point. The ML is the concentration in a sample that is equivalent to the concentration of the lowest calibration standard analyzed by a specific analytical procedure, assuming that all the method specified sample weights, volumes, and processing steps have been followed.*

2 *MDL is the minimum concentration of a substance that can be measured and reported with 99 percent confidence that the analytical concentration is greater than zero, as defined in 40 CFR 136, Appendix B.*

c. The Discharger shall submit to the Regional Water Board reports necessary to determine compliance with effluent limitations in this Order and shall follow the chemical nomenclature and sequential order of priority pollutant constituents shown in Attachment "G" – Priority Pollutant Lists. The Discharger shall report with each sample result:

   1) The minimum level achieved by the testing laboratory; and

   2) The laboratory's current MDL, as determined by the procedure found in 40 CFR 136.

d. For receiving water monitoring and for those priority pollutants without effluent limitations, the Discharger shall require its testing laboratory to quantify constituent concentrations to the lowest achievable MDL as determined by the procedure found in 40 CFR 136. In situations where the most stringent applicable receiving water objective (freshwater or human health (consumption of organisms only), as specified for that pollutant in 40 CFR 131.38[3] is below the minimum level value specified in Attachment "G" and the Discharger cannot achieve an MDL value for that pollutant below the ML value, the Discharger shall submit justification why a lower MDL value cannot be achieved. Justification shall be submitted together with monthly monitoring reports.

7. For non-priority pollutants monitoring, all analytical data shall be reported with identification of practical quantitation levels and with method detection limits, as determined by the procedure found in 40 CFR 136.

8. The Discharger shall have, and implement, an acceptable written quality assurance (QA) plan for laboratory analyses. Duplicate chemical analyses must be conducted on a minimum of ten percent (10%) of the samples, or at least one sample per month, whichever is greater. A similar frequency shall be maintained for analyzing spiked samples. When requested by the Regional Water Board or USEPA, the Discharger will participate in the NPDES discharge monitoring report QA performance study.

9. For every item of monitoring data where the requirements are not met, the monitoring report shall include a statement discussing the reasons for noncompliance, the actions undertaken or proposed that will bring the discharge into full compliance with requirements at the earliest time, and an estimate of the date when the Discharger will be in compliance. The Discharger shall notify the Regional Water Board by letter when compliance with the time schedule has been achieved.

---

3 *See Federal Register/ Vol. 65, No. 97 / Thursday, May 18, 2000 / Rules and Regulations.*

10. The Discharger shall assure that records of all monitoring information are maintained and accessible for a period of at least five years (this retention period supercedes the retention period specified in Section IV.A. of Attachment D) from the date of the sample, report, or application. This period of retention shall be extended during the course of any unresolved litigation regarding this discharge or by the request of the Regional Water Board at any time. Records of monitoring information shall include:

    a. The information listed in Attachment D- IV Standard Provisions – Records, subparagraph B. of this Order;
    b. The laboratory which performed the analyses;
    c. The date(s) analyses were performed;
    d. The individual(s) who performed the analyses;
    e. The modification(s) to analytical techniques or methods used;
    f. All sampling and analytical results, including
        1) Units of measurement used;
        2) Minimum reporting level for the analysis (minimum level, practical quantitation level (PQL));
        3) Results less than the reporting level but above the method detection limit (MDL);
        4) Data qualifiers and a description of the qualifiers;
        5) Quality control test results (and a written copy of the laboratory quality assurance plan);
        6) Dilution factors, if used; and
        7) Sample matrix type.
    g. All monitoring equipment calibration and maintenance records;
    h. All original strip charts from continuous monitoring devices;
    i. All data used to complete the application for this Order; and,
    j. Copies of all reports required by this Order.
    k. Electronic data and information generated by the Supervisory Control And Data Acquisition (SCADA) System.

11. The flow measurement system shall be calibrated at least once per year or more frequently, to ensure continued accuracy.

12. All monitoring instruments and devices used by the Discharger to fulfill the prescribed monitoring program shall be properly maintained and calibrated as necessary to ensure their continued accuracy. In the event that continuous monitoring equipment is out of service for greater than a 24-hour period, the Discharger shall obtain a representative grab sample each day the equipment is out of service. The Discharger shall correct the cause(s) of failure of the continuous monitoring equipment as soon as practicable. In its monitoring report, the Discharger shall specify the period(s) during which the equipment was out of service and if the problem has not been corrected, shall identify the steps which the Discharger is taking or proposes to take to bring the equipment back into service and the schedule for these actions.

13. Monitoring and reporting shall be in accordance with the following:

    a. Samples and measurements taken for the purpose of monitoring shall be representative of the monitored activity.

    b. The monitoring and reporting of influent, effluent, and sludge shall be done more frequently as necessary to maintain compliance with this Order and or as specified in this Order.

    c. Whenever the Discharger monitors any pollutant more frequently than is required by this Order, the results of this monitoring shall be included in the calculation and reporting of the data submitted in the discharge monitoring report specified by the Regional Water Board's Executive Officer.

    d. A "grab" sample is defined as any individual sample collected in less than 15 minutes.

    e. A composite sample is defined as a combination of no fewer than eight individual grab samples obtained over the specified sampling period. The volume of each individual grab sample shall be proportional to the discharge flow rate at the time of sampling. The compositing period shall equal the specific sampling period, or 24 hours, if no period is specified.

    f. Daily samples shall be collected on each day of the week.

    g. Monthly samples shall be collected on any representative day of each month.

    h. Quarterly samples: A representative grab sample shall be taken on any representative day of January, April, July, and October and test results shall be reported in micrograms/liter (ug/L) by the last day of the month following the month that the sample was taken.

    i. Semi-annual samples shall be collected in January and July.

    j. Annual samples shall be collected in accordance with the following schedule:

Table 1. Annual Sampling Schedule

Year	Annual Samples
2014	April
2015	July
2016	October
2017	January
2018	April

II. MONITORING LOCATIONS

The Discharger shall establish the following monitoring locations to demonstrate compliance with the effluent limitations, discharge specifications, and other requirements in this Order:

Table 2. Monitoring Station Locations

Discharge Point Name	Monitoring Location Name	Monitoring Location Description	Latitude	Longitude
--	M-INF	RWRF influent at the headworks	33°49'10"	117°30'22"
001	M-001	Discharge to Temescal Creek	33°49'10"	117°30'22"
002	REC-001	Recycled Water use	33°49'10"	117°30'22"

III. INFLUENT MONITORING REQUIREMENTS

1. A sampling station shall be established for the point of inflow to the treatment plant. The sampling station shall be located upstream of any in-plant return flows and where representative samples of the influent of the treatment plant can be obtained.

2. The Discharger shall monitor the influent to the facility at Monitoring Location M-INF as follows. If more than one analytical test method is listed for a given parameter, the Discharger must select from the listed methods and corresponding Minimum Level:

Table 3. Influent Monitoring Requirements

Constituent	Units	Type of Sample	Minimum Frequency of Sampling & Analysis (See I.13., above)	Required Analytical Test Method
Flow	MGD	Recorder/Totalizer	Continuous	---
Specific Conductance	µmhos/cm	Recorder	"	"
pH	pH units	"	"	"
BOD_5	mg/L	Composite	Weekly	See Section I.2., above
Total Suspended Solids	"	"	"	"

IV. EFFLUENT MONITORING REQUIREMENTS

1. The Discharger shall monitor the wastewater discharged from Discharge Points 001 at Monitoring Locations M-001 as follows:

Table 4. Effluent Monitoring at M-001

Constituent	Units	Type of Sample	Minimum Frequency of Sampling & Analysis (See Section I.13., above)	Required Analytical Test Method
Flow	MGD	Recorder/ Totalizer	Continuous	---
Specific Conductance	µmhos/cm	Recorder	"	"
pH	pH units	"	"	"
Turbidity[4]	NTU	"	"	"
BOD_5	mg/L	Composite	Weekly	See Section I.2. and I.7,, above
Total Suspended Solids	"	"	"	"
Coliform Organisms	MPN per 100 mL	Grab	Daily	"
Ammonia-Nitrogen	"	Composite	Monthly	"
Total Dissolved Solids	"	"	"	"
Total Hardness	"	"	"	"
Total Inorganic Nitrogen	"	"	"	"
Nitrate Nitrogen	"	"	'	"
Total Recoverable Copper	"	"	"	"
Total Recoverable Lead	"	"	"	"
Bromodichloromethane [5]	"	"	"	"
Toxicity	TUc	"	"	See Section V., below
2,3,7,8-TCDD	pg/l	Grab	Annually	See Sections I.2. and I.7., above
Cyanide, Free	µg/L	Grab	"	"
Volatile organic portion of EPA Priority Pollutants (See Attachment "G")[5]	"	Grab	Annually (See Sections I.13.j., above, and IV.2., below)	"
Remaining EPA Priority Pollutants (See Attachment "G")	"	Composite	"	"

[4] *Turbidity analysis shall be continuous, performed by a continuous recording turbidimeter. Compliance with the daily average operating filter effluent turbidity shall be determined by averaging the levels of recorded turbidity taken at a minimum of four-hour intervals over a 24-hour period. The results of the daily average turbidity determinations shall be reported monthly.*

[5] *Samples for volatile organic constituents shall be collected at the end of the pipe at the point of discharge.*

2. The monitoring frequency for those priority pollutants that are detected during the required annual monitoring at a concentration greater than the concentration specified for that pollutant[6] in Attachment I shall be accelerated to quarterly. To return to the monitoring frequency specified, the Discharger shall request and receive approval from the Regional Water Board's Executive Officer or designee.

V. WHOLE EFFLUENT TOXICITY TESTING REQUIREMENTS

1. The Discharger shall conduct critical life stage chronic toxicity testing in accordance with Method 1002.0 - Survival and Reproduction test for water flea, *Ceriodaphnia dubia* as specified in "Short-term Methods for Estimating the Chronic Toxicity of Effluents and Receiving Waters to Freshwater Organisms", Fourth Edition, Environmental Monitoring Systems Laboratory, U.S. Environmental Protection Agency 2002, Cincinnati, Ohio (October 2002, EPA-821-R-02-013).

2. The Discharger shall establish procedures to ensure that the toxicity testing laboratory notifies the discharger of the results of toxicity testing within twenty-four hours of completing such tests.

3. The Discharger shall increase the frequency of chronic toxicity testing to every two weeks whenever any test result exceeds 1.0 TUc. The first test under the accelerated schedule shall be conducted within two weeks of receiving notice of the test which exceeds 1.0 TUc, and every two weeks thereafter. The discharger may resume the regular test schedule when two consecutive chronic toxicity tests result in 1.0 TUc, or when the results of the Initial Investigation Reduction Evaluation conducted by the discharger have adequately addressed the identified toxicity problem.

4. The presence of chronic toxicity shall be estimated as specified in Short-Term Methods for Estimating the Chronic Toxicity of Effluents and Receiving Waters to Freshwater Organisms. Fourth Edition. EPA-821-R-02-013.

5. Results for both survival and reproduction endpoints shall be reported in TUc, where TUc = 100/NOEC or 100/ICp or ECp (p is the percent effluent). The no observed effect concentration (NOEC) is the highest concentration of toxicant to which organisms are exposed in a chronic test, that causes no observable adverse effect on the test organisms (e.g., the highest concentration of toxicant to which the values for the observed responses are not statistically significant different from the controls). The inhibition concentration (IC) is a point estimate of the toxicant concentration that causes a given percent reduction in a non-quantal biological measurement (e.g., reproduction or growth) calculated from a continuous model (the EPA Interpolation Method). The effective concentration (EC) is a point estimate of the toxicant concentration that would cause a given percent reduction in quantal biological measurement (e.g., larval development, survival) calculated from a continuous model (e.g., probit).

---

6 *For those priority pollutants without specified criteria values, accelerated monitoring is not required.*

6. Additional Testing Requirements

   a. A series of at least five dilutions and a control will be tested. The series shall be within 60% to 100% effluent concentration.

   b. If organisms are not cultured in-house, concurrent testing with reference toxicants shall be conducted. Where organisms are cultured in-house, monthly reference toxicant testing is sufficient. Reference toxicants shall also be conducted using the same test conditions as the effluent toxicity test (e.g., same test duration, etc.).

   c. If either of the reference toxicant test or the effluent tests do not meet all test acceptability criteria as specified in the manual[7], then the discharger must re-sample and re-test within 14 days or as soon as the discharger receives notification of failed tests.

   d. Control and dilution water should be receiving water or lab water, as appropriate, as described in the manual. If the dilution water used is different from the culture water, a second control, using culture water shall also be used.

7. Quality Assurance/Control:

   a. A quality assurance/quality control (QA/QC) program shall be instituted to verify the results of the effluent toxicity monitoring program. The QA/QC program shall include but shall not be limited to the following: (1) Selection of an independent testing laboratory; (2) Approval by the Regional Water Board's Executive Officer or Executive Officer's designee of the independent testing laboratory; (3) Once during the year, the Discharger shall split samples with the independent laboratory for conducting chronic toxicity testing; (4) Results from the independent laboratory shall be submitted to the Regional Water Board and the Discharger for evaluation; (5) The discharger shall review the test acceptability criteria in accordance with the EPA test protocols, EPA/600/4-91/002.

   b. Results from the independent laboratory of the annual QA/QC split samples are to be used for Quality Assurance/Quality Control (QA/QC) purposes only and not for purposes of determining compliance with other requirements of this Order.

8. The use of alternative methods for measuring chronic toxicity may be considered by the Executive Officer on a case–by-case basis. The use of a different test species, in lieu of conducting the required test species may be considered/approved by the Regional Water Board Executive Officer on a case-by case basis upon submittal of the documentation supporting the Discharger's determination that a different species is more sensitive and appropriate.

---

7 *Refers to USEPA Manual "Short-Term Methods for Estimating the Chronic Toxicity of Effluents and Receiving Waters to Freshwater Organisms. 4th Edition. October 2002, EPA-821-R-02-013."*

9. Reporting: Results of all toxicity testing conducted within the month following the reporting period shall be submitted monthly in accordance with "Short-term Methods for Estimating the Chronic Toxicity of Effluents and Receiving Waters to Freshwater Organisms", third edition, Environmental Monitoring Systems Laboratory, U.S. Environmental Protection Agency 1994, Cincinnati, Ohio (July 1994, EPA/600/4-91/002). The report shall include a determination of the median value of all chronic toxicity testing results conducted during the two previous months.

10. Whenever an Initial Investigation Reduction Evaluation is conducted, the results of the evaluation shall be submitted upon completion. In addition, monthly status reports shall be submitted as part of the Discharger's monitoring report for the previous month.

VI. LAND DISCHARGE MONITORING REQUIREMENTS - NOT APPLICABLE

VII. RECYCLED WATER MONITORING REQUIREMENTS

A. Monitoring for Discharge Point 002

1. The Discharger shall monitor recycled water at REC-001 only when there is no effluent flow from DP-001. If monitoring is conducted at M-001 at the same time, then only the flow rate shall be measured at REC-001.

Table 8. Reclamation Monitoring at REC-001

Parameter	Units	Sample Type	Minimum Sampling & Testing Frequency (See Section I.13., above)	Required Analytical Test Method
Flow	mgd	Recorder/Totalizer	Continuous	---
pH	pH units	Recorder	"	"
CT	mg/L-min	"	"	"
Turbidity	NTU	"	"	"
BOD_5	mg/L	Composite	Weekly	See Section I.2., above
Total Suspended Solids	"	"	"	"
Coliform Organisms	MPN per 100 mL	Grab	Daily	"
Total Inorganic Nitrogen	"	"	Monthly	"

Table 8. Reclamation Monitoring at REC-001

Parameter	Units	Sample Type	Minimum Sampling & Testing Frequency (See Section I.13., above)	Required Analytical Test Method
TDS	"	"	"	"

B. Monitoring Reclaimed Water Users

Whenever recycled water is supplied to a user, the user's name, the dates and volumes of recycled water use, the location(s) of use (including the name of the groundwater management zone underlying the recycled water use site), and the type of use (e.g. irrigation, industrial, etc.) shall be recorded on a permanent log. A summary report of water use by groundwater management zone for the previous calendar year shall be submitted to the Regional Water Board by March 1 of each year.

VIII. RECEIVING WATER MONITORING REQUIREMENTS

A. Regional Monitoring for Fish Flesh Testing

Unless otherwise directed by the Regional Water Board Executive Officer, the Discharger shall implement the approved plan for the annual sampling and testing of mercury levels in fish flesh samples collected from the Santa Ana River. The frequency of monitoring and submission of reports shall be as stipulated in the approved plan.

IX. OTHER MONITORING REQUIREMENTS

A. Biosolids Monitoring

1. Biosolids monitoring shall be conducted as follows:

Table 13. Biosolids Monitoring Requirements

Biosolids Monitoring	Units	Type of Sample	Minimum Frequency of Sampling & Testing
Priority Pollutants	mg/kg	Grab	Semi-annually
Moisture Content (% solid)	%	"	Quarterly

2. The Discharger shall maintain a permanent log of solids hauled away from the treatment facilities for use/disposal elsewhere, including the date hauled, the volume or weight (in dry tons), type (screening, grit, raw sludge, biosolids), application (agricultural, composting, etc.), and destination. This information shall be reported quarterly.

B. Water Supply Monitoring

1. At least once per month a sample of each source of the water supplied to the sewered area shall be obtained and analyzed for total dissolved solids.

2. Monthly reports shall be submitted stating the amount (in percentage or acre-feet) supplied to the sewered area from each source of water and the resulting flow-weighted water supply quality for total dissolved solids.

X. REPORTING REQUIREMENTS

A. General Monitoring and Reporting Requirements

1. The Discharger shall comply with all Standard Provisions (Attachment D) related to monitoring, reporting, and recordkeeping.

2. Any internal quality control data associated with the sample must be reported when requested by the Executive Officer. The Regional Water Board will reject the quantified laboratory data if quality control data is unavailable or unacceptable.

3. Discharge monitoring data shall be submitted in a format acceptable by the Regional Water Board. Specific reporting format may include preprinted forms and/or electronic media. The results of all monitoring required by this Order shall be reported to the Regional Water Board, and shall be submitted in such a format as to allow direct comparison with the limitations and requirements of this order.

4. The Discharger shall submit to the Regional Water Board reports necessary to determine compliance with effluent limitations in this Order and shall follow the chemical nomenclature and sequential order of priority pollutant constituents shown in Attachment G – Priority Pollutant Lists. The Discharger shall report with each sample result:

   a. The minimum level achieved by the testing laboratory; and
   b. The laboratory's current MDL, as determined by the procedure found in 40 CFR 136.
   c. For those priority pollutants without effluent limitations, the Discharger shall require its testing laboratory to quantify constituent concentrations to the lowest achievable MDL as determined by the procedure found in 40 CFR 136. In situations where the trigger value listed in Attachment I is below the minimum level value specified in Attachment H and the Discharger cannot achieve an MDL value for that pollutant below or equal to the ML value, the Discharger shall submit justification why a lower MDL value cannot be achieved. Justification shall be submitted together with monthly monitoring reports.

5. For every item of monitoring data where the requirements are not met, the monitoring report shall include a statement discussing the reasons for noncompliance, and of the actions undertaken or proposed that will bring the discharge into full compliance with requirements at the earliest time, and an estimate of the date when the Discharger will be in compliance. The Discharger shall notify the Regional Water Board by letter when compliance with the time schedule has been achieved.

6. The reports for June and December shall include a roster of plant personnel, including job titles, duties, and level of State certification for each individual.

7. The Discharger shall report monitoring results for specific parameters in accordance with the following table:

Table 14. Reporting Requirements

Parameter	Measurement
Flow	Daily Total
pH	Daily High and Daily low
Total Residual Chlorine	Daily Maximum
Electrical Conductivity	Daily Maximum
Turbidity	Daily Maximum

8. The Discharger shall file a written report with the Regional Water Board within ninety (90) days after the average dry-weather wastewater flow for any month equals or exceeds 75 percent of the design capacity of the waste treatment and/or disposal facilities. The Discharger's senior administrative officer shall sign a letter which transmits that report and certifies that the policy making body is adequately informed about it. The report shall include:

   a. Average daily flow for the month, the date on which the instantaneous peak flow occurred, the rate of that peak flow, and the total flow for the day.

   b. The Discharger's best estimate of when the average daily dry-weather flow rate will equal or exceed the design capacity of the treatment facilities.

   c. The Discharger's intended schedule for studies, design, and other steps needed to provide additional capacity for the waste treatment and/or disposal facilities before the waste flow rate equals the capacity of present units.

B. Self-Monitoring Reports (SMRs)

1. The Discharger shall submit Self-Monitoring Reports (SMRs) electronically using the State Water Board's California Integrated Water Quality System (CIWQS) Program Web site (http://www.waterboards.ca.gov/ciwqs/index.html). The CIWQS Web site will provide additional directions for SMR submittal in the event there will be service interruption for electronic submittal.

2. The Discharger shall report in the SMR the results for all monitoring specified in this Monitoring and Reporting Program. Additionally, the Discharger shall report in the SMR the results of any special studies, acute and chronic toxicity testing, TRE/TIE, PMP, and Pollution Prevention Plan required by Special Provisions – VI.C. of this Order. The Discharger shall submit monthly, quarterly, and annual SMRs including the results of all required monitoring using USEPA-approved test methods or other test methods specified in this Order. If the Discharger monitors any pollutant more frequently than required by this Order, the results of this monitoring shall be included in the calculations and reporting of the data submitted in the SMR.

3. Monitoring periods and reporting for all required monitoring shall be completed according to the following schedule:

Table 15. Monitoring and Reporting Schedule

Sampling Frequency	Monitoring Period Begins On	Monitoring Period	SMR Due Date[8]
Continuous	The effective date of this Order	All	Submit with monthly SMR
Daily	The effective date of this Order	(Midnight through 11:59 PM) or any 24-hour period that reasonably represents a calendar day for purposes of sampling.	Submit with monthly SMR
Weekly	The effective date of this Order	Sunday through Saturday	Submit with monthly SMR
Monthly	First day of calendar month following permit effective date or on permit date if that date is first day of the month	1st day of calendar month through last day of calendar month	First day of the second month following the reporting period, submit as monthly SMR
Quarterly	Closest of January 1, April 1, July 1, or October 1 following permit effective date	January 1 through March 31, samples are collected in January; April 1 through June 30; samples are collected in April; July 1 through September 30; samples are collected in July; October 1 through December 31; samples are collected in October	First day of the second month following the reporting period, submit with monthly SMR
Semiannually	Closest of January 1 or July 1 following permit effective date	January 1 through June 30 July 1 through December 31	First day of the second month following the reporting period, submit with monthly SMR
Annually	The effective day of this Order	1st day of calendar month through last day of calendar month (See Section I.A.13.j, above)	First day of the second month following the reporting period, submit with monthly SMR

4. Reporting Protocols. The Discharger shall report with each sample result the applicable Minimum Level (ML) and the current Method Detection Limit (MDL), as determined by the procedure in 40 CFR Part 136.

   The Discharger shall report the results of analytical determinations for the presence of chemical constituents in a sample using the following reporting protocols:

   a. Sample results greater than or equal to the ML shall be reported as measured by the laboratory (i.e., the measured chemical concentration in the sample).

   b. Sample results less than the ML, but greater than or equal to the laboratory's MDL, shall be reported as "Detected, but Not Quantified," or DNQ. The estimated chemical concentration[9] of the sample shall also be reported.

      For the purposes of data collection, the laboratory shall write the estimated chemical concentration next to DNQ as well as the words "Estimated Concentration" (may be shortened to "Est. Conc."). The laboratory may, if such information is available, include numerical estimates of the data quality for the reported result. Numerical estimates of data quality may be percent accuracy (+ a percentage of the reported value), numerical ranges (low to high), or any other means considered appropriate by the laboratory.

[8] *Should the due date fall on a weekend or holiday, the due date shall be extended to the next work day.*
[9] See definition in Attachment A

c. Sample results less than the laboratory's MDL shall be reported as "Not Detected," or ND.

d. Dischargers are to instruct laboratories to establish calibration standards so that the ML value (or its equivalent if there is differential treatment of samples relative to calibration standards) is the lowest calibration standard. At no time is the Discharger to use analytical data derived from *extrapolation* beyond the lowest point of the calibration curve.

5. The Discharger shall attach a cover letter to the SMR. The information contained in the cover letter shall clearly identify violations of the WDRs; discuss corrective actions taken or planned; and the proposed time schedule for corrective actions. Identified violations must include a description of the requirement that was violated and a description of the violation.

C. Discharge Monitoring Reports (DMRs)

1. At any time during the term of this permit, the State or Regional Water Board may notify the Discharger to electronically submit USEPA Discharge Monitoring Reports (DMRs). Until such notification is given, the Discharger shall submit DMRs in accordance with the requirements described below.

2. DMRs must be signed and certified as required by the standard provisions (Attachment D). The Discharge shall submit the DMR to the address listed below:

Standard Mail	**FedEx/UPS/ Other Private Carriers**
State Water Resources Control Board Division of Water Quality c/o DMR Processing Center PO Box 100 Sacramento, CA 95812-1000	State Water Resources Control Board Division of Water Quality c/o DMR Processing Center 1001 I Street, 15th Floor Sacramento, CA 95814

3. All discharge monitoring results must be reported on the official USEPA pre-printed DMR forms (EPA Form 3320-1). Forms that are self-generated or modified cannot be accepted.

D. Other Reports

The Discharger shall report the results of any special studies, acute and chronic toxicity testing, TRE/TIE, PMP, and Pollution Prevention Plan required by Special Provisions – VI.C. of this Order. The Discharger shall submit reports with the first monthly SMR scheduled to be submitted on or immediately following the report due date in compliance with SMR reporting requirements described in subsection X.B.3 above.

ATTACHMENT F: FACT SHEET

Table of Contents

I. Discharger/Facility Information 3
II. Facility Description 4
A. Wastewater and Biosolids Treatment or Controls 4
B. Discharge Points and Receiving Waters 4
1. Discharge Points 4
2. Receiving Waters 5
C. Compliance Summary 5
III. Applicable Plans, Policies, and Regulations 7
A. Legal Authorities 7
B. California Environmental Quality Act (CEQA) 7
C. State Regulations, Policies, and Plans 7
1. Water Quality Control Plans 7
2. National Toxics Rule (NTR) and California Toxics Rule (CTR) 8
3. State Implementation Policy 9
4. Alaska Rule 9
5. Antidegradation Policy 9
6. Anti-Backsliding Requirements 10
7. Monitoring and Reporting Requirements 10
8. Pretreatment 10
9. Biosolids 10
IV. Rationale For Effluent Limitations and Discharge Specifications for Surface Water Limitations 11
A. Discharge Prohibitions 11
B. Technology-Based Effluent Limitations 11
1. Scope and Authority 11
2. Applicable Technology-Based Effluent Limitations 12
C. Water Quality-Based Effluent Limitations (WQBELs) 12
1. Scope and Authority 12
2. Applicable Beneficial Uses and Water Quality Criteria and Objectives 13
3. Determining the Need for WQBELs for Priority Pollutants 15
4. WQBEL Calculations 16
5. Whole Effluent Toxicity (WET) 17
D. Effluent Limitations 18
1. Satisfaction of Anti-Backsliding Requirements 18
2. Satisfaction of Antidegradation Policy 18
3. Stringency of Requirements for Individual Pollutants 18
4. Summary of Effluent Limitations 19
V. Rationale for Recycled Water Specificaitons 19
VI. Stormwater Discharge Requirements 20
VII. Rationale for Receiving Water Limitations 21
A. Surface Water 21

B. Groundwater 21
VIII. Rationale for Monitoring and Reporting Requirements 21
A. Influent Monitoring 21
B. Effluent Monitoring 22
C. Whole Effluent Toxicity Testing Requirements 22
D. Receiving Water Monitoring 23
1. Surface Water 23
2. Groundwater – Not Applicable 23
E. Other Monitoring Requirements 23
1. Biosolids Monitoring 23
2. Water Supply Monitoring 23
3. Pretreatment Monitoring 23
IX. Rationale for Provisions 24
A. Standard Provisions 24
B. Special Provisions 24
1. Reopener Provisions 24
2. Special Studies, Technical Reports and Additional Monitoring Requirements 24
3. Best Management Practices and Pollution Prevention 25
4. Construction, Operation, and Maintenance Specifications 25
5. Special Provisions for Municipal Facility - POTWs Only 25
X. Public Participation 26
A. Notification of Interested Parties 26
B. Written Comments 26
C. Public Hearing 26
D. Waste Discharge Requirements Petitions 27
E. Information and Copying 27
F. Register of Interested Persons 27
G. Additional Information 27

ATTACHMENT F: FACT SHEET

As described in Section II of this Order, this Fact Sheet includes the legal requirements and technical rationale that serve as the basis for the requirements of this Order.

This Order has been prepared under a standardized format to accommodate a broad range of discharge requirements for dischargers in California. Only those sections or subsections of this Order that are specifically identified as "not applicable" have been determined not to apply to this Discharger. Sections or subsections of this Order not specifically identified as "not applicable" are fully applicable to this Discharger.

I. DISCHARGER/FACILITY INFORMATION

The following table summarizes administrative information related to the Facility.

Table 1. Discharger/Facility Information

WDID	8 332476001
Discharger/Operator	City of Corona, Department of Water and Power
Discharger Legally Responsible Officer	Jonathan Daly, General Manager
Mailing Address	755 Public Safety Way, Corona, CA 92880
Name of Facility	Water Reclamation Facility No. 3
Facility Address	3997 Temescal Canyon Rd. Corona, CA 92883
Facility Contact	Frank Garza, Chief Water Reclamation Operator, (951) 279-3665
Billing Address	Same as Mailing Address
Type of Facility	POTW/Water Reclamation Facility
Threat to Water Quality	1
Complexity	A
Pretreatment Program	Y
Reclamation Requirements	Y
Facility Design Flow	1 million gallons per day (mgd)
Permitted Flow	1 mgd

The City of Corona, Department of Water and Power (hereinafter Discharger) is the owner and operator of Water Reclamation Facility No. 3 (WRF-3), a publicly owned treatment works that produces tertiary treated water which is used for irrigation by various recycled water users. Recycled water that cannot be used is discharged to Temescal Creek. The Discharger currently treats approximately 0.46 mgd of mainly domestic sewage at WRF-3. The design capacity of WRF-3 is 1 mgd.

The facility receives municipal wastewater from a service area that encompasses approximately 4,650 acres of primarily residential areas west and east of Interstate 15, including the Cunningham Baristic Project and Westerly Plateau area, the Eagle Glen area, Butterfield Station Area, Bedford Wash area, and the El Cerrito area. The facility receives and treats domestic wastewater.

The majority of the time recycled water from the Facility is used for irrigation in areas overlying the Bedford and Temescal Groundwater Management Zones. During low demand for recycled water, the excess water is discharged to Temescal Creek.

The discharge is currently regulated under Order No. R8-2007-0007, NPDES No. CA8000395. The Discharger filed a report of waste discharge and submitted an application for renewal of the NPDES permit on October 3, 2011. Although Order No. R8-2007-0007 expired on April 1, 2012, the terms and conditions of the Order have been automatically continued and remain in effect until new Waste Discharge Requirements, which will also serve as an NPDES permit, are adopted pursuant to this Order, since the Discharger submitted a timely application for renewal of the permit.

II. FACILITY DESCRIPTION

A. Wastewater and Biosolids Treatment or Controls

WRF-3 is an activated sludge plant with microfiltration. The treatment system includes two wet wells with two drum screens for preliminary treatment. Following screening the wastewater flows to an activated sludge tank that consists of 3 chambers with microfiltration. The wastewater is aerated and filtered in the same tanks and waste sludge is pumped to the sewer system to be treated at the City's WRF Nos. 1 and 2. Following the activated sludge/microfilters the wastewater flows to a chlorine contact tank. When there is a discharge to the creek, sodium bisulfite is used for dechlorination.

Stormwater runoff from the facility is collected in an onsite retention basin and pumped to the headworks for treatment. No stormwater from the facility is discharged to Temescal Creek.

Attachment B shows the location of the Facility.

Attachment C is a flow schematic of the treatment system.

B. Discharge Points and Receiving Waters

1. Discharge Points

Tertiary treated wastewater is discharged to Temescal Creek at Discharge Point (DP)-001. Recycled water from the WRF-3 is delivered to users for landscape and golf course irrigation at DP-002.

2. Receiving Waters

Tertiary treated recycled water is used for irrigation in areas overlying the Temescal and Bedford Groundwater Management Zones. Recycled water which is not used is discharged to Temescal Creek, Reach 2, which is tributary to the Santa Ana River, Reach 3.

C. Compliance Summary

Based on a review of effluent monitoring data submitted by the Discharger, the discharge from WRF-3 has been in compliance with the requirements of Order No. R8-2007-0007, with the exception of 3 violations of the chlorine residual limit and one violation of the turbidity limit. These violations lasted less than 3 minutes and do not show a chronic problem. Table 2 below provides a summary of compliance monitoring data submitted by the Discharger.

Table 2: Compliance Summary

MONTH	BOD mg/L	TSS mg/L	Ammonia mg/L	Bis(2-ethylhexyl) ug/L	Copper ug/L	Mercury ug/L	Selenium ug/L	Zinc ug/L	Cyanide (Free) ug/L	Arsenic ug/L
Ave. Mo. Limit	20	20	4.5	5.9	41.8	0.051	4.1	131	No Limit	No Limit
Ave. Weekly Limit	30	30		11.8	84	0.102	8.2	264	5.2 (4-day average)	150 (4-day average)
MDL	2.54	2.8	0.059	2.3	0.04	0.033	0.1	0.7	4.9	
RDL	5.0	5.0	0.1	5.0	0.5	0.2	1.0	1.0	5.0	
Jan-09	3.00	ND	3.35	2.5	2.8	ND	1.9	74.00	ND	0.8
Feb-09	4.10	ND	0.950		4	ND	1.3	51.00		
Mar-09	2.20	ND	0.223		3.10	ND	1.4	77.00		
Apr-09	3.20	ND	0.068	ND	3.00	ND	0.6	62.00	ND	ND
May-09	ND	0.225	0.283		3.8	ND	0.3	63.00		
Jun-09	2.7	1	ND		3.90	ND	0.3	60.00		
Jul-09	1.6	0.8	ND	ND	6.00	ND	1.2	68.00	ND	1.3
Aug-09	5.3	ND	ND		4.4	ND	1.3	64		
Sep-09	ND	ND	0.036		4.2	ND	1.6	75.00		
Oct-09	4.0	ND	0.043	ND	4.30	ND	1.5	63.00	ND	1.9
Nov-09	ND	ND	0.018		5.6	ND	1.1	69		
Dec-09	4.8	ND	1.012	ND	4.30	ND	1.5	57.00		
Jan-10	1.00	ND	2.2825	ND	2.6	ND	0.6	67.00	ND	1.1
Feb-10	1.50	ND	ND		5.5	ND	1.3	68.00		
Mar-10	1.40	ND	0.0186	1276.00	6.00	ND	0.9	73.00		
Apr-10	1.00	ND	0.07	ND	4.30	ND	1.2	45.00	ND	1.0
May-10	ND	ND	0.0165		4.5	ND	2	60.00		
Jun-10	2.2	ND	0.038		4.10	ND	2.1	65.00		
Jul-10	2.3	ND	ND	ND	4.80	ND	1.6	60.00	ND	1.7
Aug-10	4.3	ND	0.025		4.4	ND	0.9	ND		
Sep-10	ND	ND	0.064		5.1	ND	1	56.00		
Oct-10	2.5	ND	ND	ND	5.10	ND	1	52.00	ND	1.9
Nov-10	ND	ND	0.0875		5.9	ND	1.5	53		

Table 2: Compliance Summary, continued

	BOD	TSS	Ammonia	Bis(2-ethylhexyl)	Copper	Mercury	Selenium	Zinc	Cyanide (Free)	Arsenic
MONTH	mg/L	mg/L	mg/L	ug/L	ug/L	ug/L	ug/L	ug/L	ug/L	ug/L
Dec-10	1.4	ND	0.016		4.50	ND	0.9	46.00		
Jan-11	2.80	ND	0.04	ND	5.5	ND	0.9	53	ND	0.4
Feb-11	0.80	ND	0.02		5.7	ND	1.1	51		
Mar-11	1.20	0.8	0.37		4.3	ND	1.6	64		
Apr-11	0.80	ND	ND	ND	4.8	ND	0.4	52	ND	0.7
May-11	ND	ND	0.06		7.8	ND	0.6	57		
Jun-11	3.6	0.8	0.56		5.9	ND	0.9	57		
Jul-11	4.0	ND	ND	ND	4.3	ND	0.6	53	ND	1.0
Aug-11	1.6	ND	0.02		4.5	ND	0.9	65		
Sep-11	ND	ND	ND		5.8	ND	1.0	78		
Oct-11	0.8	ND	0.08	ND	6.6	ND	0.5	64	ND	1.1
Nov-11	ND	ND	ND		4.4	ND	0.9	58		
Dec-11	1.5	ND	ND		3.5	ND	1.0	62		
Jan-12	1.80	ND	ND	ND	4.8	ND	1.4	66	ND	0.9
Feb-12	1.60	4	ND		7.8	ND	2.4	68		
Mar-12	3.30	ND	ND		4.6	ND	2.2	70		
Apr-12	3.50	1.25	ND	ND	4.0	ND	1.4	59	ND	1.3
May-12	ND	ND	ND		3.6	ND	2.7	54		
Jun-12	2.0	ND	ND		5.3	ND	3.4	53		
Jul-12	0.8	ND	ND	ND	4.4	ND	0.8	63	ND	1.4
Aug-12	1.4	ND	ND		6.3	ND	1.0	77		
Sep-12	ND	1	ND		5.8	ND	1.0	79		
Oct-12	1.4	ND	ND	ND	5.5	ND	1.0	78	ND	1.4
Nov-12	ND	ND	ND		5.0	ND	0.8	59		
Dec-12	2.8	ND	ND		4.5	ND	1.1	65		
Jan-13	3.80	ND	ND	ND	5.3	ND	1.7	61	ND	1.3
Feb-13	4.80	ND	ND		11.0	ND	1.4	66		
Mar-13	2.50	ND	ND		5.8	ND	1.4	82		
Apr-13	4.30	ND	ND	ND	4.0	ND	1	62	ND	0.9
May-13	3.2	ND	ND		4.1	ND	0.6	63		
Jun-13	5.3	ND	ND		3.7	ND	1.4	72		
Jul-13	ND	ND	ND							
Aug-13	ND	2.8	0.02							
Sep-13	0.6	ND	ND							
Oct-13	ND	ND	0.01							
Nov-13	0.9	ND	0.01							
Dec-13	ND	ND	0.02							
Maximum	5.30	4.00	3.35	2.50	11.00	0.00	3.40	82.00	ND	1.9
Minimum	0.60	0.23	0.01	2.50	2.60	0.00	0.30	45.00	ND	ND
Average	2.49	1.41	0.34	2.50	4.90	#DIV/0!	1.22	63.00	ND	1.2
Mo. Limit	20	20	4.5	5.9	41.8	0.051	4.1	131		
Daily limit	30	30		11.8	84	0.102	8.2	264		
MDL	2.54	2.8	0.059	2.3	0.04	0.033	0.1	0.7		
RDL	5	5	0.1	5	0.5	0.2	1	1		

III. APPLICABLE PLANS, POLICIES, AND REGULATIONS

The requirements contained in the proposed Order are based on the requirements and authorities described in this section.

A. Legal Authorities

This Order is issued pursuant to Chapter 5.5, Division 7 of the California Water Code (commencing with Section 13370) and Section 402 of the federal Clean Water Act (CWA) and implementing regulations adopted by the U.S. Environmental Protection Agency (USEPA). This Order serves as Waste Discharge Requirements (WDRs) pursuant to Article 4, Chapter 4, Division 7 of the Water Code (commencing with Section 13260). This Order shall also serve as a NPDES permit for point source discharges from the WRF to surface waters.

B. California Environmental Quality Act (CEQA)

Under Water Code Section 13389, this action to adopt waste discharge requirements that serve as an NPDES permit is exempt from the provisions of CEQA, Public Resources Code section 21000 et seq. (County of Los Angeles v. California State Water Resources Control Board (2006) 143 Cal.App.4th 985, mod. (Nov. 6, 2006, B184034) 50 Cal.Rptr.3d 619, 632-636.)

C. State Regulations, Policies, and Plans

1. Water Quality Control Plans

The Regional Water Board adopted an updated Water Quality Control Plan for the Santa Ana Basin (hereinafter Basin Plan) that became effective on January 24, 1995. The Basin Plan designates beneficial uses, establishes water quality objectives, and contains implementation programs and policies to achieve those objectives for all waters addressed through the Plan. In addition, State Water Resources Control Board (State Water Board) Resolution No. 88-63 (Sources of Drinking Water Policy) requires that, with certain exceptions, the Regional Water Board assign the municipal and domestic water supply use to water bodies. Based on the exception criteria specified in Resolution No. 88-63, the Regional Water Board excepted Reach 5 (starting from Orange Avenue in Redlands) of the Santa Ana River and downstream reaches, Temescal Creek, and Lake Elsinore from the municipal and domestic supply beneficial use.

On January 22, 2004, the Regional Water Board adopted Resolution No. R8-2004-0001, amending the Basin Plan to incorporate revised boundaries for groundwater subbasins, now termed "management zones", new nitrate-nitrogen and TDS objectives for the new management zones, and new nitrogen and TDS management strategies applicable to both surface and ground waters. The State Water Board and Office of Administrative Law (OAL) approved the N/TDS Amendment on September 30, 2004 and December 23, 2004, respectively. Accordingly, these waste discharge requirements implement relevant, groundwater-related components of the N/TDS Amendment. Specifically, the total dissolved solids (TDS) and total inorganic nitrogen (TIN) limitations established in this Order are based on the Basin Plan.

As previously discussed, the WRF-3 discharges wastewater from two discharge points. The designated beneficial uses of receiving waters affected by the discharge are as follows:

Table 3. Basin Plan Beneficial Uses

Discharge Point	Receiving Water Name	Beneficial Use(s)
001	Temescal Creek, Reach 2, Santa Ana River Reach 3	Agriculture Supply, industrial supply, groundwater recharge, body contact and non-body contact recreation, and warm water aquatic habitat Excepted from municipal and domestic supply
002	Temescal and Bedford GMZs	Municipal Supply, agricultural supply, industrial service supply, and industrial process supply

Requirements of this Order implement the Basin Plan.

2. National Toxics Rule (NTR) and California Toxics Rule (CTR)

USEPA adopted the NTR on December 22, 1992, and later amended it on May 4, 1995 and November 9, 1999. About forty criteria in the NTR applied in California. On May 18, 2000, USEPA adopted the CTR. The CTR promulgated new toxics criteria for California and, in addition, incorporated the previously adopted NTR criteria that were applicable in the state. The CTR was amended on February 13, 2001. These rules contain water quality criteria for priority pollutants.

3. State Implementation Policy

On March 2, 2000, the State Water Board adopted the *Policy for Implementation of Toxics Standards for Inland Surface Waters, Enclosed Bays, and Estuaries of California* (State Implementation Policy or SIP). The SIP became effective on April 28, 2000 with respect to the priority pollutant criteria promulgated for California by the USEPA through the NTR and to the priority pollutant objectives established by the Regional Water Board in the Basin Plan. The SIP became effective on May 18, 2000 with respect to the priority pollutant criteria promulgated by the USEPA through the CTR. The State Water Board adopted amendments to the SIP on February 24, 2005 that became effective on July 13, 2005. The SIP establishes implementation provisions for priority pollutant criteria and objectives and provisions for chronic toxicity control. Requirements of this Order implement the SIP.

4. Alaska Rule

On March 30, 2000, USEPA revised its regulation that specifies when new and revised state and tribal water quality standards (WQS) become effective for CWA purposes (40 C.F.R. § 131.21, 65 Fed. Reg. 24641 (April 27, 2000)). Under the revised regulation (also known as the Alaska rule), new and revised standards submitted to USEPA after May 30, 2000, must be approved by USEPA before being used for CWA purposes. The final rule also provides that standards already in effect and submitted to USEPA by May 30, 2000, may be used for CWA purposes, whether or not approved by USEPA.

5. Antidegradation Policy

40 CFR 131.12 requires that state water quality standards include an antidegradation policy consistent with the federal policy. The State Water Board established California's antidegradation policy in State Water Board Resolution No. 68-16. Resolution No. 68-16 incorporates the federal antidegradation policy where the federal policy applies under federal law. Resolution No. 68-16 requires that existing water quality be maintained unless degradation is justified based on specific findings. The Regional Water Board's Basin Plan implements, and incorporates by reference, both the State and federal antidegradation policies. The permitted discharge must be consistent with the antidegradation provision of 40 CFR 131.12 and State Water Board Resolution No. 68-16.

All effluent limitations in this Order are at least as stringent as those in prior waste discharge requirements for the Facility. Based on data currently available, discharges in compliance with the terms and conditions of this Order should not result in a lowering of water quality and are therefore consistent with antidegradation provisions.

6. Anti-Backsliding Requirements

Sections 402(o)(2) and 303(d)(4) of the CWA and federal regulations at 40 CFR 122.44(l) prohibit backsliding in NPDES permits. These anti-backsliding provisions require that effluent limitations in a reissued permit must be as stringent as those in the previous permit, with some exceptions in which limitations may be relaxed or eliminated. Section 402(o) allows for backsliding when there is information available that wasn't available when the original effluent limits were set. The Discharger has provided over 5 years of monitoring data that wasn't available when the limits were first set in Order No. R8-2007-0007. Data collected since Order No. R8-2007-0007 was adopted show that mercury, bis(2-ethylhexyl)phthalate, selenium and zinc, no longer pose a reasonable potential to cause or create an exceedances of water quality standards. Therefore, pursuant to CWA Section 402(o)(2(B)(i), limits for mercury, bis(2-ethylhexyl)phthalate, selenium and zinc are no longer included in this Order. This Order conforms with the anti-backsliding requirements of the CWA and federal regulations.

7. Monitoring and Reporting Requirements

Sections 13267 and 13383 of the CWC authorize the Regional Water Board to require technical and monitoring reports. 40 CFR 122.48 requires that all NPDES permits specify requirements for recording and reporting monitoring results. The Monitoring and Reporting Program (MRP) establishes monitoring and reporting requirements to implement State and federal requirements. This MRP is provided in Attachment E.

8. Pretreatment

Not applicable. There are no categorical or significant industrial discharges to this facility.

9. Biosolids

On February 19, 1993, the USEPA issued a final rule for the use and disposal of sewage sludge, 40 CFR, Part 503. This rule requires that producers of sewage sludge meet certain reporting, handling, and disposal requirements. The State of California has not been delegated the authority to implement this program, therefore, the U.S. Environmental Protection Agency is the implementing agency. However, this Order includes Biosolids monitoring requirements.

IV. RATIONALE FOR EFFLUENT LIMITATIONS AND DISCHARGE SPECIFICATIONS FOR SURFACE WATER LIMITATIONS

The CWA requires point source dischargers to control the amount of conventional, non-conventional, and toxic pollutants that are discharged into the waters of the United States. The control of pollutants discharged is established through effluent limitations and other requirements in NPDES permits. There are two principal bases for effluent limitations; 40 CFR 122.44(a) requires that permits include applicable technology-based limitations and standards, and 40 CFR 122.44(d) requires that permits include water quality-based effluent limitations to attain and maintain applicable numeric and narrative water quality criteria to protect the beneficial uses of the receiving water

A. Discharge Prohibitions

The discharge prohibitions are based on the Federal Clean Water Act, Basin Plan, State Water Board's plans and policies, U.S. Environmental Protection Agency guidance and regulations, and the previous waste discharge requirements, Order No. R8-2007-0007, and are consistent with the discharge prohibitions set for other discharges regulated by waste discharge requirements adopted by the Regional Water Board.

B. Technology-Based Effluent Limitations

1. Scope and Authority

Section 301(b) of the CWA and implementing USEPA permit regulations at 40 CFR122.44 require that permits include conditions meeting applicable technology-based requirements at a minimum, and any more stringent effluent limitations necessary to meet applicable water quality standards. The discharge authorized by this Order must meet minimum federal technology-based requirements based on Secondary Treatment Standards at 40 CFR Part 133 and/or Best Professional Judgment (BPJ) in accordance with 40 CFR125.3.

Regulations promulgated in 40 CFR 125.3(a)(1) require technology-based effluent limitations for municipal dischargers to be placed in waste discharge requirements based on Secondary Treatment Standards or Equivalent to Secondary Treatment Standards.

The Federal Water Pollution Control Act Amendments of 1972 (PL 92-500) established the minimum performance requirements for POTWs [defined in Section 304(d)(1)]. Section 301(b)(1)(B) of that Act requires that such treatment works must, as a minimum, meet effluent limitations based on secondary treatment as defined by the USEPA Administrator. Based on this statutory requirement, USEPA developed secondary treatment regulations, which are specified in 40 CFR Part 133. These technology-based regulations apply to all municipal wastewater treatment plants and identify the minimum level of effluent quality attainable by secondary treatment in terms of biochemical oxygen demand (BOD_5), total suspended solids (TSS), and pH.

2. Applicable Technology-Based Effluent Limitations

WRF-3 meets the technology-based regulations for the minimum level of effluent quality attainable by secondary treatment in terms of BOD_5, total suspended solids and removal rates as summarized in the Table below. These effluent limitations are applicable for discharges to Discharge Point 001 under conditions of 20:1 dilution provided by natural flow in Temescal Creek.

Table 4. Summary of Technology-Based Effluent Limits for Secondary Treatment

Constituent	Average Weekly (mg/L)	Average Monthly (mg/L)	Average Monthly Removal Rate %
Biochemical Oxygen Demand, 5-day 20°C	45	30	85
Total Suspended Solids	45	30	85

As noted in section V.C.2.d., below, tertiary treatment is required to protect beneficial uses of Temescal Creek for discharges from Discharge Point 001. The technology-based limits, which are based on BPJ for levels achievable with tertiary treatment, summarized in the Table below are applicable.

Table 5. Summary of Technology-Based Effluent Limits for Tertiary Treatment

Constituent	Average Weekly (mg/L)	Average Monthly (mg/L)	Average Monthly Removal Rate %
Biochemical Oxygen Demand, 5-day 20°C	30	20	85
Total Suspended Solids	30	20	85

C. Water Quality-Based Effluent Limitations (WQBELs)

1. Scope and Authority

Section 301(b) of the CWA and 40 CFR 122.44(d) require that permits include limitations more stringent than applicable federal technology-based requirements where necessary to achieve applicable water quality standards.

40 CFR 122.44(d)(1)(i) mandates that permits include effluent limitations for all pollutants that are or may be discharged at levels that have the reasonable potential to cause or contribute to an exceedance of a water quality standard, including numeric and narrative objectives within a standard. Where reasonable potential has been established for a pollutant, but there is no numeric criterion or objective for the

pollutant, water quality-based effluent limitations (WQBELs) must be established using: (1) USEPA criteria guidance under CWA section 304(a), supplemented where necessary by other relevant information; (2) an indicator parameter for the pollutant of concern; or (3) a calculated numeric water quality criterion, such as a proposed state criterion or policy interpreting the state's narrative criterion, supplemented with other relevant information, as provided in 40 CFR 122.44(d)(1)(vi).

The process for determining reasonable potential and calculating WQBELs when necessary is intended to protect the designated uses of the receiving water as specified in the Basin Plan, and achieve applicable water quality objectives and criteria that are contained in other state plans and policies, or any applicable water quality criteria contained in the CTR and NTR.

2. Applicable Beneficial Uses and Water Quality Criteria and Objectives

a. **The Basin Plan.** Table 3, above, lists the beneficial uses of Temescal Creek, Santa Ana River Reach 3, and the Temescal and Bedford GMZs. The Basin Plan specifies narrative and numeric water quality objectives for all inland surface waters, including Temescal Creek and the Santa Ana River. Some of those applicable to these receiving waters are listed in the following table.

Table 6. Examples of Basin Plan Surface Water Quality Objectives

Constituents	Basis for Limitations
Ammonia Nitrogen	"Un-ionized ammonia (NH_3 or UIA) is toxic to Fish and other aquatic organisms. In water, UIA exists in equilibrium with ammonium (NH_4^+) and hydroxide (OH^-) ions. The proportions of each change with temperature, pH and salinity of the water.". Thus, ammonia discharges to surface water pose a threat to aquatic life and instream beneficial uses, as well as to the beneficial uses of affected groundwater. The Basin Plan specifies total ammonia and un-ionized ammonia objectives and an effluent limit of 4.5 mg/L for discharges to Temescal Creek, listed in Table 5-6.
Hydrogen Ion (pH)	Hydrogen Ion (pH) is a measure of the Hydrogen Ion concentration in the water. Extreme pH levels can have adverse effects on aquatic biota and can corrode pipes and concrete. The Basin Plan specifies that the pH in inland surface waters shall not be depressed below 6.5, nor raised above 8.5 as a result of controllable water quality factors.
Total Chlorine Residual	Chlorine and its reaction products are toxic to aquatic life. To protect aquatic life, the Basin Plan specifies that for wastewater discharged into inland surface waters, the chlorine residual should not exceed 0.1 mg/L.
Total Dissolved Solids	The Basin Plan specifies a wasteload allocation of 700 mg/L for Total Dissolved Solids for discharges from WRF-3 that may affect the Santa Ana River
Total Inorganic Nitrogen	The Basin Plan specifies a wasteload allocation of 10 mg/L for Total Inorganic Nitrogen for discharges from WRF-3 that may affect the Santa Ana River

In accordance with 40 CFR Section 122.45(d), there may be instances in which the basis for a limit for a particular continuous discharge may be impracticable to be stated as a maximum daily, average weekly, or average monthly effluent limitation. The Regional Water Board has determined that it is not practicable to express TDS and TIN effluent limitations as average weekly and average monthly effluent limitations because the TDS and TIN objectives in the Basin Plan were established primarily to protect the underlying groundwater. Consequently, a 12-month average period is more appropriate.

b. **TDS and TIN Limits.** As noted above, the TDS and TIN limits in this order are based on a waste load allocation (WLA) that protects the Santa Ana River. It is assumed that the WLA is also protective of the downgradient GMZs, as a significant amount of the water discharged to Temescal Creek recharges those GMZs. This Order requires the Discharger to implement a TDS/TIN Offset Plan for discharges in excess of these limits. The Discharger removes TDS and TIN from groundwater at a reverse osmosis facility, and operates the facility at full capacity, to provide the required offsets.

c. **NTR, CTR and SIP**. The National Toxics Rule, California Toxics Rule, and State Implementation Policy specify numeric objectives for toxic substances and the procedures whereby these objectives are to be implemented. The procedures include those used to conduct reasonable potential analysis to determine the need for effluent limitations for priority and non-priority pollutants.

d. **Requirement to Meet Title 22, Tertiary Treatment**. Article 3, Section 60305 of Title 22, Chapter 3, "Use of Recycled Water for Impoundments" of the California Code of Regulations specifies that recycled water used as a source of supply in a nonrestricted recreational impoundment shall be at all times an adequately disinfected, oxidized, coagulated, clarified, filtered wastewater (tertiary treated). The degree of treatment specified represents an approximately 5-log reduction in the virus content of the water. The California Department of Public Health (CDPH) has determined that this degree of virus removal is necessary to protect the health of people using these impoundments for water contact recreation. The CDPH has developed wastewater disinfection guidelines ("Wastewater Disinfection for Health Protection", Department of Health Services, Sanitary Engineering Branch, February 1987) for discharges of wastewater to surface waters where water contact recreation (REC-1) is a beneficial use. The disinfection guidelines recommend the same treatment requirements for wastewater discharges to REC-1 waters as those stipulated in Title 22 for supply of recycled water to nonrestricted recreational impoundments, since the public health risks under both scenarios are analogous. The disinfection guidelines are based on sound science and are widely used as guidance to assure public health and beneficial use protection.

Neither Temescal Creek nor the Santa Ana River are "nonrestricted recreational impoundments," nor is "recycled water[1]" being used as a supply source to these receiving waters, pursuant to the definitions in Title 22. The Creek and River are used for water contact recreation and, accordingly, are designated REC-1 (water contact beneficial use). People recreating in the Creek and/or River face an exposure similar to those coming in contact with recycled water in an impoundment. Therefore, to protect the water contact recreation beneficial use and to prevent nuisance and health risk, it is necessary and appropriate to require the same degree of treatment for wastewater discharges to the Creek and River as would be required for the use of recycled water in a nonrestricted recreational impoundment. Thus, this Order specifies requirements based on tertiary or equivalent treatment.

3. Determining the Need for WQBELs for Priority Pollutants

In accordance with Section 1.3 of the SIP, the Regional Water Board conducted a reasonable potential analysis (RPA) for each priority pollutant with an applicable criterion or objective to determine if a WQBEL is required in the Order. The Regional Water Board analyzed effluent data submitted by the Discharger for the past several years to determine if a pollutant has the reasonable potential to cause or contribute to an excursion above a state water quality standard. For all parameters that have the reasonable potential to cause or contribute to an excursion above a water quality standard, numeric WQBELs are required. The RPA considered criteria from the CTR, and when applicable, water quality objectives specified in the Basin Plan. For hardness dependent metals, a fixed hardness value of 130 mg/L was used, which is based on the CWA 303(d) listing documents for copper and lead in Reach 3 of the Santa Ana River.

The results of the RPA are summarized in Table 7, below. Bromodichloromethane was determined to have reasonable potential to exceed water quality objectives. Consequently, effluent limits for this pollutant are included in the Order. Since, Selenium, Mercury, Zinc, and Bis(2-Ethylhexyl)Phthalate were not detected, or were detected well below the water quality objective, during the past several years, effluent limits for these constituents are no longer needed, as there is no reasonable potential for the discharge to cause an exceedance of the water quality objectives for these constituents.

Although data indicate that there is no reasonable potential for the discharge to cause or contribute to an exceedance of the copper or lead objectives in the receiving water, the Order still must include effluent limits for copper and lead, because the Santa Ana River Reach 3 is listed on the CWA 303(d) List as being impaired for these constituents.

---

[1] *As defined in the Reclamation Criteria, recycled water means water which, as a result of treatment of domestic wastewater, is suitable for a direct beneficial use or a controlled use that would not otherwise occur.*

This Order continues to require monitoring for all priority pollutants, and accelerated monitoring for those priority pollutants that are detected in the effluent.

Table 7. RPA Evaluation

Parameter	Unit	Effluent	CTR			Is Effluent Limit Required?
		MEC	CMC	CCC	Human Health for consumption of organisms	
Copper	µg/l	7.8	13	9		Yes*
Mercury	µg/L	ND**			0.051	No
Selenium	µg/l	3.4		5		No
Zinc	µg/l	79	120	120		No
Bis(2-Ethylhexyl) Phthalate	µg/l	2.5			5.9	No
Bromodichloro methane	µg/l	49			46	Yes

* Effluent limits for copper are included due to antidegradation procedures based on discharges into an impaired waterbody.
**ND-non-detection, based on lab information provided by the discharge

4. WQBEL Calculations

For priority pollutants, water quality based effluent limits are based on monitoring results and the calculation process outlined in Section 1.4 of the California Toxic Rule and the Policy for Implementation of Toxics Standards for Inland Surface Waters, Enclosed Bays and Estuaries of California. The calculation of the WQBELs for Copper, Lead, and Bromodichloromethane are summarized in the following table:

Table 8: WQBEL Calculations

Parameter	Units	Most Stringent Criteria			Dilution Factors			HH Calculations		
		Human Health$_{HH}$	CMC	CCC	HH	CMC	CCC	ECA$_{HH}$ = AMEL$_{HH}$	AMEL/MDEL Multiplier$_{HH}$	MDEL$_{HH}$
Copper	ug/L		17.9	11.7	0					
Lead	ug/L		114	4.4	0					
Bromodichloromethane	ug/L	46	-	-	0	-	-	46	1.88	86

Parameter	Aquatic Life Calculations									Final Effluent Limitations	
	ECA Multiplier$_{acute}$	LTA$_{acute}$	ECA Multiplier$_{chronic}$	LTA$_{chronic}$	Lowest LTA	AMEL Multiplier$_{95}$	AMEL$_{AL}$	MDEL Multiplier$_{99}$	MDEL$_{AL}$	Lowest AMEL	Lowest MDEL
Copper	0.47	8.64	0.61	8.64						10.3	16.6
Lead	0.21	23.1	0.39	23.1						2.1	7.0
Bromodichloromethane	-	-	-	-	*	-	-	-	-	46	86

5. Whole Effluent Toxicity (WET)

This Order does not specify WET limits but requires chronic toxicity monitoring. The discharge has not exceeded the Chronic Toxicity trigger in Order No. R8-2007-0007, since the adoption of the Order. Therefore, there is not a reasonable potential for the discharge to cause or contribute to toxicity in the receiving waters. This Order, follows Order No. R8-2007-0007, for the regulation of chronic toxicity in the discharge. If there is toxicity found greater than 1.0 TUc, the Order requires the Discharger to accelerate toxicity monitoring from monthly to twice per month. If the toxicity is verified, then the Order requires the Discharge to implement an Initial Investigation Toxicity Identification/Reduction Evaluation.

D. Effluent Limitations

1. Satisfaction of Anti-Backsliding Requirements

With the exception of bis(2-ethylhexyl)phthalate, mercury, selenium, and zinc, all effluent limitations in this order are at least as stringent as the effluent limitations in the previous order. As noted above, data collected since the previous order was adopted show that these four pollutants no longer pose a reasonable potential to cause or create an exceedances of water quality standards. Therefore, pursuant to CWA Section 402(o)(2)(B)(i), limits for these four pollutants are no longer included in this Order.

2. Satisfaction of Antidegradation Policy

Discharges in conformance with the requirements of this Order will not result in a lowering of water quality and therefore conform to antidegradation requirements specified in Resolution No. 68-16, which incorporates the federal antidegradation policy at 40 CFR 131.12. Discharges in excess of the TDS and/or TIN limits are being offset by the operation of a reverse osmosis facility and removing TDS from groundwater, according to a plan approved by the previous Order.

3. Stringency of Requirements for Individual Pollutants

Water quality-based effluent limitations have been scientifically derived to implement water quality objectives that protect beneficial uses. Both the beneficial uses and the water quality objectives have been approved pursuant to federal law and are the applicable federal water quality standards. To the extent that toxic pollutant water quality-based effluent limitations were derived from the CTR, the CTR is the applicable standard pursuant to 40 CFR131.38. The scientific procedures for calculating the individual water quality-based effluent limitations for priority pollutants are based on the CTR-SIP, which was approved by USEPA on May 18, 2000. Apart from certain surface water standards changes resulting from the N/TDS Basin Plan amendment that do not materially affect the quality requirements for the discharges regulated by this Order, all beneficial uses and water quality objectives contained in the Basin Plan were approved under state law and submitted to and approved by USEPA prior to May 30, 2000. Any water quality objectives and beneficial uses submitted to USEPA prior to May 30, 2000, but not approved by USEPA before that date, are nonetheless "applicable water quality standards for purposes of the CWA" pursuant to 40 CFR 131.21(c)(1). Collectively, this Order's restrictions on individual pollutants are no more stringent than required to implement the requirements of the CWA.

4. Summary of Effluent Limitations

Table 9. Summary of Effluent Limits for DP 001

Parameter	Units	Effluent Limitations					Basis
		Average Monthly	Average Weekly	Max Daily	Instantaneous Minimum	Instantaneous Maximum	
Ammonia Nitrogen	mg/L	4.5	--	--	--	--	BP
TDS	mg/L	700	--	--	--	--	BP
TIN	mg/L	10	--	--	--	--	BP
pH	Std. unit	--	--	--	6.5	8.5	BP
Coliform	MPN	--	2.2 Median of last 7 days	--	--	--	Title 22
Copper	µg/l	10.3		16.6			CTR,SIP
Lead	µg/l	2.1		7.0			CTR,SIP
Bromodichloro -methane	µg/l	46	--	86	--	--	CTR,SIP

Notes: BP= Basin Plan, Title 22= Section 60305, Article 3, Chapter 3, Title 22 of the California Code of Regulations

V. RATIONALE FOR RECYCLED WATER SPECIFICAITONS

1. Section 13523 of the California Water Code provides that a Regional Water Board, after consulting with and receiving the recommendations from the CDPH and any party who has requested in writing to be consulted, and after any necessary hearing, shall prescribe water reclamation requirements for water which is used or proposed to be used as recycled water, if, in the judgment of the Board, such requirements are necessary to protect the public health, safety, or welfare. Section 13523 further provides that such requirements shall include, or be in conformance with, the statewide uniform water recycling criteria established by the CDPH pursuant to California Water Code Section 13521.

2. Reclamation specifications in the proposed Order are based on the recycling criteria contained in Title 22, Division 4, Chapter 3, Sections 60301 through 60355, California Code of Regulations, and the California Water Code Section 13521.

3. Summary of Reclamation Effluent Limitations:

Table 10. Summary of Reclamation Effluent Limitations at DP 002

Parameter	Units	Effluent Limitations					Basis
		Average Monthly	Average Weekly	Maximum Daily	Instantaneous Minimum	Instantaneous Maximum	
BOD_5	mg/L	20	30	--	--	--	BPJ
Total Suspended Solids	mg/L	20	30	--	--	--	BPJ
TDS	mg/L	700					BP
CT	milligram-minutes per liter	--	--	--	450	--	Title 22
Coliform	MPN/100 mL	--	2.2 median in 7 days	--	--	--	Title 22
Turbidity	NTU	--	--	2 avg.		--	Title 22

Notes: BP= Basin Plan, Title 22= Section 60305, Article 3, Chapter 3, Title 22 of the California Code of Regulations

4. The current recycled water use areas overlie the Temescal and Bedford GMZs. Generally, the water quality objectives listed in Table 5-3 of the Basin Plan are the basis for TDS limits. However, there are insufficient groundwater data to establish TDS/TIN objectives for the Bedford GMZ. As noted above, the TDS and TIN limits in this order are based on a waste load allocation (WLA) that protects the Santa Ana River. It is assumed that the WLA is also protective of the Temescal GMZ and downgradient GMZs, as a significant amount of the water discharged to Temescal Creek recharges those GMZs. This Order requires the Discharger to implement a TDS Offset Plan (discussed above) for any recycled water in excess of this limit.

5. This Order does not specify a nitrogen limit for recycled water when it is used for irrigation, since it is assumed that all of the nitrogen will be used by plants and the lack of nitrogen in the water that percolates beyond the root zone will not adversely affect water quality.

VI. STORMWATER DISCHARGE REQUIREMENTS

Stormwater that falls on the treatment facility area is collected in a concrete lined retention basin and is pumped to the headworks for treatment. Therefore, no Stormwater Discharge Requirements are needed.

VII. RATIONALE FOR RECEIVING WATER LIMITATIONS

A. Surface Water

The surface water receiving water limitations in this Order are based on the water quality objectives contained in the Basin Plan.

B. Groundwater

Not applicable at this time. However, this Order may be reopened if it is found that the receiving water limitations are not protective of underlying groundwater.

VIII. RATIONALE FOR MONITORING AND REPORTING REQUIREMENTS

Sections 13267 and 13383 of the CWC authorize the Regional Water Boards to require technical and monitoring reports. 40 CFR 122.48 also requires all NPDES permits to specify recording and reporting of monitoring results. The Monitoring and Reporting Program (MRP), Attachment E of this Order, establishes monitoring and reporting requirements to implement federal and State requirements. The following provides the rationale for the monitoring and reporting requirements contained in the MRP for this facility.

In the previous MRP, the influent and effluent monitoring requirements that were imposed were intended to evaluate the performance of the Microfiltration combined with an activated sludge process. The monitoring required was more extensive than needed. The 5 years of extended monitoring has shown that the treatment plant can meet waste discharge, water reclamation, and Basin Plan requirements. Therefore, the proposed monitoring is a significant reduction from the previous monitoring program. The proposed monitoring is sufficient to continue to evaluate the performance of the treatment plant and ensure compliance with the effluent limits established in the Order. The monitoring also requires annual scans for all priority pollutants, accelerated monitoring for those pollutants that are detected above specific triggers, and includes reopener provisions that allow for future changes to add effluent limits and more frequent monitoring.

A. Influent Monitoring

The monitoring includes constituents and frequencies sufficient to evaluate the performance of the treatment plant, and pretreatment requirements.

B. Effluent Monitoring

The Discharger is required to conduct monitoring of the permitted discharges in order to evaluate compliance with permit conditions. Pollutants to be monitored include all pollutants for which effluent limitations are specified. Further, in accordance with Section 1.3 of the SIP, periodic monitoring is required for all priority pollutants defined by the CTR, for which criteria apply and for which no effluent limitations have been established, to evaluate reasonable potential to cause or contribute to an excursion above a water quality standard.

This Order modifies the monitoring requirements specified in previous Order and adds and/or deletes monitoring requirements corresponding to those pollutants for which limits were added or removed from the previous Order. This Order also requires the Discharger to conduct accelerated monitoring for those priority pollutants that are detected in the annual analyses.

C. Whole Effluent Toxicity Testing Requirements

Whole effluent toxicity (WET) tests provide an indicator for potential adverse effects on the receiving water quality from the aggregate toxic effect of a mixture of pollutants in the effluent. WET tests measure the degree of response of exposed aquatic test organisms to an effluent. The WET test implements the narrative "no toxics in toxic amounts" criterion. There are two types of WET tests: acute and chronic. An acute toxicity test is conducted over a shorter time period and measures mortality. A chronic toxicity test is conducted over a longer period of time and may measure mortality, reproduction, and growth.

The Basin Plan specifies a narrative objective for toxicity, requiring that all waters be maintained free of toxic substances in concentrations that are lethal to or produce other detrimental response on aquatic organisms. Detrimental response includes but is not limited to decreased growth rate, decreased reproductive success of resident or indicator species, and/or significant alterations in population, community ecology, or receiving water biota.

In addition to the Basin Plan requirements, Section 4 of the SIP states that a chronic toxicity effluent limitation is required in permits for all discharges that will cause, have the reasonable potential to cause, or contribute to chronic toxicity in receiving waters. Therefore, in accordance with the SIP, this Order requires the Discharger to conduct chronic toxicity testing. In addition, the Order establishes thresholds that when exceeded requires the Discharger to conduct accelerated toxicity testing and/or conduct toxicity identification evaluation (TIE) studies.

This Order requires the Discharger to conduct chronic toxicity testing of the effluent on a monthly basis for discharges to Temescal Creek. The Order also requires the Discharger to conduct an Initial Investigation Toxicity Reduction Evaluation (IITRE) program when either the two-month median of toxicity test results exceeds 1 TUc or any single test exceeds 1.7 TUc for survival endpoint. Based on the results of this investigation program and at the discretion of the Executive Officer, a more rigorous Toxicity Reduction Evaluation/Toxicity Identification Evaluation (TRE/TIE) may be required. A re-opener provision is included in the Order to incorporate a chronic toxicity effluent limitation if warranted by the toxicity test results.

D. Receiving Water Monitoring

1. Surface Water

The Order requires the Discharger to establish a sampling station at a suitable location where the flow[2] in Temescal Creek at the point of discharge can be determined. The Order also requires flow measurements in the Creek to be made prior to any discharge of secondary treated wastewater to the Creek and daily measurements until the discharge is terminated.

2. Groundwater – Not Applicable

E. Other Monitoring Requirements

1. Biosolids Monitoring

This Order continues the monitoring requirements specified in previous Orders.

2. Water Supply Monitoring

The Discharger is required to collect a sample of each source of water supplied and analyze for total dissolved solids. The result of this monitoring will enable the Discharger to show compliance with TDS limitations in the Order.

3. Pretreatment Monitoring

Not applicable.

---

2 Exclusive of discharges to surface waters from upstream publicly owned treatment works.

IX. RATIONALE FOR PROVISIONS

A. Standard Provisions

Standard Provisions, which apply to all NPDES permits in accordance with 40 CFR 122.41, and additional conditions applicable to specified categories of permits in accordance with 40 CFR 122.42, are provided in Attachment D.

40 CFR 122.41(a)(1) and (b) through (n) establish conditions that apply to all State-issued NPDES permits. These conditions must be incorporated into the permits either expressly or by reference. If incorporated by reference, a specific citation to the regulations must be included in the Order. 40 CFR 123.25(a)(12) allows the state to omit or modify conditions to impose more stringent requirements. In accordance with 40 CFR 123.25, this Order omits federal conditions that address enforcement authority specified in 40 CFR 122.41(j)(5) and (k)(2) because the enforcement authority under the California Water Code is more stringent. In lieu of these conditions, this Order incorporates by reference Water Code section 13387(e).

B. Special Provisions

1. Reopener Provisions

The reopener provisions are based on 40 CFR 122.44(c) and 123. The Regional Water Board may reopen the permit to modify permit conditions and requirements. Causes for modifications include the promulgation of new regulations, modification in sludge use or disposal practices, or adoption of new regulations by the State Water Board or Regional Water Board, including revisions to the Basin Plan.

2. Special Studies, Technical Reports and Additional Monitoring Requirements

a. This Order requires the Discharger's to notify the Executive Officer of the its continued involvement with the comprehensive mercury investigation program currently being conducted by a group of Santa Ana River system Dischargers. If the Discharger discontinues its involvement with this comprehensive program, the Discharger is required, within 60 days of that date, to submit for the approval of the Executive Officer its plan for the annual testing of mercury levels in fish flesh samples collected from the Santa Ana River, upstream of, at, and downstream of the point of discharge. Upon approval, the Discharger is required to implement the plan.

b. This Order requires the Discharger to develop procedures to conduct Toxicity Identification and Reduction Evaluations. This provision is based on the SIP, Section 4, Toxicity Control Provisions.

3. Best Management Practices and Pollution Prevention

The requirements are based on the Policy for Implementation of Toxics Standards for Inland Surface Waters, Enclosed Bays, and Estuaries of California, Section 2.4.5.1. and are applicable to POTW facilities including the Discharger.

4. Construction, Operation, and Maintenance Specifications

The requirements are based on requirements that were specified in the prior Order.

5. Special Provisions for Municipal Facility - POTWs Only

a. Sewer Collection System Requirements: The State Water Board issued General Waste Discharge Requirements for Sanitary Sewer Systems, Order No. 2006-0003-DWQ on May 2, 2006. The General Order requires public agencies that own or operate sanitary sewer systems with greater than one mile of pipes or sewer lines to enroll for coverage under the General Order. The General Order requires agencies to develop sanitary sewer management plans (SSMPs) and report all sanitary sewer overflows (SSOs), among other requirements and prohibitions.

   Furthermore, the General Order contains requirements for operation and maintenance of collection systems and for reporting and mitigating sanitary sewer overflows. Inasmuch that the Discharger's collection system is part of the system that is subject to this Order, certain standard provisions are applicable as specified in Provisions, section VI.C.5. For instance, the 24-hour reporting requirements in this Order are not included in the General Order. The Discharger must comply with both the General Order and this Order. The Discharger and public agencies that are discharging wastewater into the facility were required to obtain enrollment for regulation under the General Order.

b. Biosolids Disposal Requirements: On February 19, 1993, the USEPA issued a final rule for the use and disposal of sewage sludge, 40 CFR, Part 503. This rule requires that producers of sewage sludge meet certain reporting, handling, and disposal requirements. The State of California has not been delegated the authority to implement this program, therefore, the U.S. Environmental Protection Agency is the implementing agency.

c. Pretreatment Requirements: The treatment plant capacity is 1 mgd and there are no significant industrial users within the service areas. Consequently, this Order contains requirements for the implementation of an effective pretreatment program pursuant to Section 307 of the Federal Clean Water Act; Parts 35 and 403 of Title 40, Code of Federal Regulations (40 CFR 35 and 40 CFR 403); and/or Section 2233, Title 23, California Code of Regulations.

X. PUBLIC PARTICIPATION

The California Regional Water Quality Control Board, Santa Ana Region is considering the issuance of waste discharge requirements (WDRs) that will serve as a National Pollutant Discharge Elimination System (NPDES) permit for City of Corona, Department of Water and Power's Water Reclamation Facility No. 3. As a step in the WDR adoption process, the Regional Water Board staff has developed tentative WDRs. The Regional Water Board encourages public participation in the WDR adoption process.

A. Notification of Interested Parties

The Regional Water Board has notified the Discharger and interested agencies and persons of its intent to prescribe waste discharge requirements for the discharges and has provided them with an opportunity to submit their written comments and recommendations. Notification was provided through the posting of a Notice of Public Hearing in the area of the discharge, in the local newspaper, and at the Regional Water Board website.

B. Written Comments

The staff determinations are tentative. Interested persons are invited to submit written comments concerning these tentative WDRs. Comments must be submitted either in person or by mail to the Executive Office at the Regional Water Board at the address above on the cover page of this Order.

To be fully responded to by staff and considered by the Regional Water Board, written comments should be received at the Regional Water Board offices by 5:00 p.m. on February 14, 2014.

C. Public Hearing

The Regional Water Board will hold a public hearing on the tentative WDRs during its regular Board meeting on the following date and time and at the following location:

Date:	March 14, 2014
Time:	9:00 A.M.
Location:	Loma Linda City Council Chambers 25541 Barton Road Loma Linda, CA

Interested persons are invited to attend. At the public hearing, the Regional Water Board will hear testimony, if any, pertinent to the discharge, WDRs, and permit. Oral testimony will be heard; however, for accuracy of the record, important testimony should be in writing.

Please be aware that dates and venues may change. Our web address http://www.waterboards.ca.gov/santaana where you can access the current agenda for changes in dates and locations.

D. Waste Discharge Requirements Petitions

Any aggrieved person may petition the State Water Board to review the decision of the Regional Water Board regarding the final WDRs. The petition must be submitted within 30 days of the Regional Water Board's action to the following address:

State Water Resources Control Board
Office of Chief Counsel
P.O. Box 100, 1001 I Street
Sacramento, CA 95812-0100

E. Information and Copying

Documents related to this Order, including comments received, are on file and may be inspected at the Regional Water Board's office at any time between 9:00 a.m. and 3:00 p.m., Monday through Friday. Copying of documents may be arranged through the Regional Water Board by calling (951) 782-4130.

F. Register of Interested Persons

Any person interested in being placed on the mailing list for information regarding this Order should contact the Regional Water Board, reference this order, and provide a name, address, and phone number.

G. Additional Information

Requests for additional information or questions regarding this Order should be directed to Ken Theisen at (951) 320-2028.

ATTACHMENT G - EPA PRIORITY POLLUTANT LIST

EPA PRIORITY POLLUTANT LIST					
Metals		**Acid Extractibles**		**Base/Neutral Extractibles (continuation)**	
1.	Antimony	45.	2-Chlorophenol	91.	Hexachloroethane
2.	Arsenic	46.	2,4-Dichlorophenol	92.	Indeno (1,2,3-cd) Pyrene
3.	Beryllium	47.	2,4-Dimethylphenol	93.	Isophorone
4.	Cadmium	48.	2-Methyl-4,6-Dinitrophenol	94.	Naphthalene
5a.	Chromium (III)	49.	2,4-Dinitrophenol	95.	Nitrobenzene
5b.	Chromium (VI)	50.	2-Nitrophenol	96.	N-Nitrosodimethylamine
6.	Copper	51.	4-Nitrophenol	97.	N-Nitrosodi-N-Propylamine
7.	Lead	52.	3-Methyl-4-Chlorophenol	98.	N-Nitrosodiphenylamine
8.	Mercury	53.	Pentachlorophenol	99.	Phenanthrene
9.	Nickel	54.	Phenol	100.	Pyrene
10.	Selenium	55.	2, 4, 6 – Trichlorophenol	101.	1,2,4-Trichlorobenzene
11.	Silver		**Base/Neutral Extractibles**		**Pesticides**
12.	Thallium	56.	Acenaphthene	102.	Aldrin
13.	Zinc	57.	Acenaphthylene	103.	Alpha BHC
	Miscellaneous	58.	Anthracene	104.	Beta BHC
14.	Cyanide	59.	Benzidine	105.	Delta BHC
15.	Asbestos (not required unless requested)	60.	Benzo (a) Anthracene	106.	Gamma BHC
16.	2,3,7,8-Tetrachlorodibenzo-P-Dioxin (TCDD)	61.	Benzo (a) Pyrene	107.	Chlordane
	Volatile Organics	62.	Benzo (b) Fluoranthene	108.	4, 4' - DDT
17.	Acrolein	63.	Benzo (g,h,i) Perylene	109.	4, 4' - DDE
18.	Acrylonitrile	64.	Benzo (k) Fluoranthene	110.	4, 4' - DDD
19.	Benzene	65.	Bis (2-Chloroethoxy) Methane	111.	Dieldrin
20.	Bromoform	66.	Bis (2-Chloroethyl) Ether	112.	Alpha Endosulfan
21.	Carbon Tetrachloride	67.	Bis (2-Chloroisopropyl) Ether	113.	Beta Endosulfan
22.	Chlorobenzene	68.	Bis (2-Ethylhexyl) Phthalate	114.	Endosulfan Sulfate
23.	Chlorodibromomethane	69.	4-Bromophenyl Phenyl Ether	115.	Endrin
24.	Chloroethane	70.	Butylbenzyl Phthalate	116.	Endrin Aldehyde
25.	2-Chloroethyl Vinyl Ether	71.	2-Chloronaphthalene	117.	Heptachlor
26.	Chloroform	72.	4-Chlorophenyl Phenyl Ether	118.	Heptachlor Epoxide
27.	Dichlorobromomethane	73.	Chrysene	119.	PCB 1016
28.	1,1-Dichloroethane	74.	Dibenzo (a,h) Anthracene	120.	PCB 1221
29.	1,2-Dichloroethane	75.	1,2-Dichlorobenzene	121.	PCB 1232
30.	1,1-Dichloroethylene	76.	1,3-Dichlorobenzene	122.	PCB 1242
31.	1,2-Dichloropropane	77.	1,4-Dichlorobenzene	123.	PCB 1248
32.	1,3-Dichloropropylene	78.	3,3'-Dichlorobenzidine	124.	PCB 1254
33.	Ethylbenzene	79.	Diethyl Phthalate	125.	PCB 1260
34.	Methyl Bromide	80.	Dimethyl Phthalate	126.	Toxaphene
35.	Methyl Chloride	81.	Di-n-Butyl Phthalate		
36.	Methylene Chloride	82.	2,4-Dinitrotoluene		
37.	1,1,2,2-Tetrachloroethane	83.	2-6-Dinitrotoluene		
38.	Tetrachloroethylene	84.	Di-n-Octyl Phthalate		
39.	Toluene	85.	1,2-Dipenylhydrazine		
40.	1,2-Trans-Dichloroethylene	86.	Fluoranthene		
41.	1,1,1-Trichloroethane	87.	Fluorene		
42.	1,1,2-Trichloroethane	88.	Hexachlorobenzene		
43.	Trichloroethylene	89.	Hexachlorobutadiene		
44.	Vinyl Chloride	90.	Hexachlorocyclopentadiene		

ATTACHMENT H – MINIMUM LEVELS

MINIMUM LEVELS IN PPB (µg/l)

Table 1- VOLATILE SUBSTANCES[1]	GC	GCMS
Acrolein	2.0	5
Acrylonitrile	2.0	2
Benzene	0.5	2
Bromoform	0.5	2
Carbon Tetrachloride	0.5	2
Chlorobenzene	0.5	2
Chlorodibromomethane	0.5	2
Chloroethane	0.5	2
Chloroform	0.5	2
Dichlorobromomethane	0.5	2
1,1 Dichloroethane	0.5	1
1,2 Dichloroethane	0.5	2
1,1 Dichloroethylene	0.5	2
1,2 Dichloropropane	0.5	1
1,3 Dichloropropylene (volatile)	0.5	2
Ethylbenzene	0.5	2
Methyl Bromide (*Bromomethane*)	1.0	2
Methyl Chloride (*Chloromethane*)	0.5	2
Methylene Chloride (*Dichloromethane*)	0.5	2
1,1,2,2 Tetrachloroethane	0.5	1
Tetrachloroethylene	0.5	2
Toluene	0.5	2
trans-1,2 Dichloroethylene	0.5	1
1,1,1 Trichloroethane	0.5	2
1,1,2 Trichloroethane	0.5	2
Trichloroethylene	0.5	2
Vinyl Chloride	0.5	2
1,2 Dichlorobenzene (volatile)	0.5	2
1,3 Dichlorobenzene (volatile)	0.5	2
1,4 Dichlorobenzene (volatile)	0.5	2

Selection and Use of Appropriate ML Value:

ML Selection: When there is more than one ML value for a given substance, the discharger may select any one of those ML values, and their associated analytical methods, listed in this Attachment that are below the calculated effluent limitation for compliance determination. If no ML value is below the effluent limitation, then the discharger shall select the lowest ML value, and its associated analytical method, listed in the PQL Table.

ML Usage: The ML value in this Attachment represents the lowest quantifiable concentration in a sample based on the proper application of all method-based analytical procedures and the absence of any matrix interferences. Assuming that all method-specific analytical steps are followed, the ML value will also represent, after the appropriate application of method-specific factors, the lowest standard in the calibration curve for that specific analytical technique. Common analytical practices sometimes require different treatment of the sample relative to calibration standards.
Note: chemical names in parenthesis and italicized is another name for the constituent.

---

1 *The normal method-specific factor for these substances is 1, therefore, the lowest standard concentration in the calibration curve is equal to the above ML value for each substance.*

MINIMUM LEVELS IN PPB (µg/l)

Table 2 – Semi-Volatile Substances[2]	GC	GCMS	LC
2-Chloroethyl vinyl ether	1	1	
2 Chlorophenol	2	5	
2,4 Dichlorophenol	1	5	
2,4 Dimethylphenol	1	2	
4,6 Dinitro-2-methylphenol	10	5	
2,4 Dinitrophenol	5	5	
2- Nitrophenol		10	
4- Nitrophenol	5	10	
4 Chloro-3-methylphenol	5	1	
2,4,6 Trichlorophenol	10	10	
Acenaphthene	1	1	0.5
Acenaphthylene		10	0.2
Anthracene		10	2
Benzidine		5	
Benzo (a) Anthracene (*1,2 Benzanthracene*)	10	5	
Benzo(a) pyrene (*3,4 Benzopyrene*)		10	2
Benzo (b) Flouranthene (*3,4 Benzofluoranthene*)		10	10
Benzo(g,h,i)perylene		5	0.1
Benzo(k)fluoranthene		10	2
bis 2-(1-Chloroethoxyl) methane		5	
bis(2-chloroethyl) ether	10	1	
bis(2-Chloroisopropyl) ether	10	2	
bis(2-Ethylhexyl) phthalate	10	5	
4-Bromophenyl phenyl ether	10	5	
Butyl benzyl phthalate	10	10	
2-Chloronaphthalene		10	
4-Chlorophenyl phenyl ether		5	
Chrysene		10	5
Dibenzo(a,h)-anthracene		10	0.1
1,2 Dichlorobenzene (semivolatile)	2	2	
1,3 Dichlorobenzene (semivolatile)	2	1	
1,4 Dichlorobenzene (semivolatile)	2	1	
3,3' Dichlorobenzidine		5	
Diethyl phthalate	10	2	
Dimethyl phthalate	10	2	
di-n-Butyl phthalate		10	
2,4 Dinitrotoluene	10	5	
2,6 Dinitrotoluene		5	
di-n-Octyl phthalate		10	
1,2 Diphenylhydrazine		1	
Fluoranthene	10	1	0.05
Fluorene		10	0.1
Hexachloro-cyclopentadiene	5	5	
1,2,4 Trichlorobenzene	1	5	

MINIMUM LEVELS IN PPB (µg/l)

Table 2 - SEMI-VOLATILE SUBSTANCES[2]	GC	GCMS	LC	COLOR
Pentachlorophenol	1	5		
Phenol [3]	1	1		50
Hexachlorobenzene	5	1		
Hexachlorobutadiene	5	1		
Hexachloroethane	5	1		
Indeno(1,2,3,cd)-pyrene		10	0.05	
Isophorone	10	1		
Naphthalene	10	1	0.2	
Nitrobenzene	10	1		
N-Nitroso-dimethyl amine	10	5		
N-Nitroso -di n-propyl amine	10	5		
N-Nitroso diphenyl amine	10	1		
Phenanthrene		5	0.05	
Pyrene		10	0.05	

Table 3– INORGANICS[4]	FAA	GFAA	ICP	ICPMS	SPGFAA	HYDRIDE	CVAA	COLOR	DCP
Antimony	10	5	50	0.5	5	0.5			1000
Arsenic		2	10	2	2	1		20	1000
Beryllium	20	0.5	2	0.5	1				1000
Cadmium	10	0.5	10	0.25	0.5				1000
Chromium (total)	50	2	10	0.5	1				1000
Chromium VI	5							10	
Copper	25	5	10	0.5	2				1000
Lead	20	5	5	0.5	2				10000
Mercury				0.5			0.2		
Nickel	50	5	20	1	5				1000
Selenium		5	10	2	5	1			1000
Silver	10	1	10	0.25	2				1000
Thallium	10	2	10	1	5				1000
Zinc	20		20	1	10				1000
Cyanide								5	

2 *With the exception of phenol by colorimetric technique, the normal method-specific factor for these substances is 1000, therefore, the lowest standards concentration in the calibration curve is equal to the above ML value for each substance multiplied by 1000.*

3 *Phenol by colorimetric technique has a factor of 1.*

4 *The normal method-specific factor for these substances is 1, therefore, the lowest standard concentration in the calibration curve is equal to the above ML value for each substance.*

MINIMUM LEVELS IN PPB (µg/l)

Table 4- PESTICIDES – PCBs[5]	GC
Aldrin	0.005
alpha–BHC (*a-Hexachloro-cyclohexane*)	0.01
beta–BHC (*b-Hexachloro-cyclohexane*)	0.005
Gamma–BHC (*Lindane; g-Hexachloro-cyclohexane*)	0.02
Delta-BHC (*d-Hexachloro-cyclohexane*)	0.005
Chlordane	0.1
4,4'-DDT	0.01
4,4'-DDE	0.05
4,4'-DDD	0.05
Dieldrin	0.01
Alpha-Endosulfan	0.02
Beta-Endosulfan	0.01
Endosulfan Sulfate	0.05
Endrin	0.01
Endrin Aldehyde	0.01
Heptachlor	0.01
Heptachlor Epoxide	0.01
PCB 1016	0.5
PCB 1221	0.5
PCB 1232	0.5
PCB 1242	0.5
PCB 1248	0.5
PCB 1254	0.5
PCB 1260	0.5
Toxaphene	0.5

Techniques:
GC - Gas Chromatography
GCMS - Gas Chromatography/Mass Spectrometry
HRGCMS - High Resolution Gas Chromatography/Mass Spectrometry (i.e., EPA 1613, 1624, or 1625)
LC - High Pressure Liquid Chromatography
FAA - Flame Atomic Absorption
GFAA - Graphite Furnace Atomic Absorption
HYDRIDE - Gaseous Hydride Atomic Absorption
CVAA - Cold Vapor Atomic Absorption
ICP - Inductively Coupled Plasma
ICPMS - Inductively Coupled Plasma/Mass Spectrometry
SPGFAA - Stabilized Platform Graphite Furnace Atomic Absorption (i.e., EPA 200.9)
DCP - Direct Current Plasma
COLOR - Colorimetric

---

5 *The normal method-specific factor for these substances is 100, therefore, the lowest standard concentration in the calibration curve is equal to the above ML value for each substance multiplied by 100.*

ATTACHMENT I – TRIGGERS FOR MONITORING PRIORITY POLLUTANTS

	CONSTITUENT	µg/L
1	Antimony	7
2	Arsenic	75
3	Beryllium	--
4	Cadmium	3.7
5a	Chromium III	120
5b	Chromium VI	5.5
6	Copper	14.2
7	Lead	12.2
8	Mercury	0.026
9	Nickel	30
10	Selenium	2.5
11	Silver	11.2
12	Thallium	2.8
13	Zinc	70
14	Cyanide	2.6
15	Asbestos	--
16	2,3,7,8-TCDD (Dioxin)	0.000000007
17	Acrolein	160
18	Acrylonitrile	0.03
19	Benzene	0.6
20	Bromoform	2.2
21	Carbon Tetrachloride	0.13
22	Chlorobenzene	340
23	Chlorodibromomethane	0.22
24	Chloroethane	--
25	2-Chloroethyl vinyl ether	--
26	Chloroform	--
27	Dichlorobromomethane	0.28
28	***1,1-Dichloroethane***	***5***
29	1,2-Dichloroethane	0.19
30	1,1-Dichloroethylene	0.029
31	1,2-Dichloropropane	0.26
32	1,3-Dichloropropylene	5
33	***Ethylbenzene***	***0.3***
34	Methyl Bromide	24
35	Methyl Chloride	--
36	Methylene Chloride	2.4
37	1,1,2,2-Tetratchloroethane	0.085

	CONSTITUENT	µg/L
38	Tetratchloroethylene	0.4
39	***Toluene***	***0.15***
40	***1,2,-Trans-dichloroethylene***	***10***
41	***1,1,1-Trichloroethane***	***200***
42	1,1,2-Trichloroethane	0.3
43	Trichloroethylene	1.35
44	***Vinyl Chloride***	***0.5***
45	2-Chlorophenol	60
46	2,4-Dichlorophenol	46.5
47	2,4-Dimethylphenol	270
48	2-Methy-4,6-Dinitrophenol	6.7
49	2,4-Dinitrophenol	35
50	2-Nitrophenol	--
51	4-Nitrophenol	--
52	3-Methyl-4-Chlorophenol	--
53	Pentachlorophenol	0.14
54	Phenol	10500
55	2,4,6-Trichlorophenol	1.05
56	Acenapthene	600
57	Acenapthylene	--
58	Anthracene	4800
59	Benzidine	0.00006
60	Benzo (a) anthracene	0.0022
61	Benzo (a) pyrene	0.0022
62	Benzo (b) fluoranthene	0.0022
63	Benzo (g,h,i) pyrylene	--
64	Benzo (k) fluorantene	0.0022
65	Bis (2-Chloroethoxy) methane	--
66	Bis (2-Chloroethyl) ether	0.016
67	Bis (2-Chloroisopropyl) ether	700
68	Bis (2-ethyhexyl) phthalate	0.9
69	4-Bromophenyl phenyl ether	--
70	Butyl benzyl phthalate	1500
71	2- Chloronapthalene	850
72	4-Chlrorphenyl phenyl ether	--
73	Chrysene	0.0022
74	Dibenzo (a,h) anthracene	0.0022
75	***1,2-Dichlorobenzene***	***0.6***

See notes below for italicized constituents.

ATTACHMENT I. -Continued

	CONSTITUENT	µg/L
76	1,3-Dichlorobenzene	200
77	***1,4-Dichlorobenzene***	***5***
78	3,3-Dichlorobenzidine	0.02
79	Diethyl phthalate	11,500
80	Dimethyl phthalate	156,500
81	Di-N-butyl phthalate	1,350
82	2,4-Dinitrotoluene	0.055
83	2,6-Dinitrotoluene	--
84	Di-N-octyl phthalate	--
85	1,2-Diphenylhydrazine	0.02
86	Fluoranthene	150
87	Fluorene	650
88	Hexachlorobenzene	0.00038
89	Hexachlorobutadiene	0.22
90	***Hexachlorocyclopentadiene***	***50***
91	Hexachloroethane	0.95
92	Indeno (1,2,3-cd) pyrene	0.0022
93	Isophorone	4.2
94	***Naphthalene***	***17***
95	Nitrobenzene	8.5
96	N-Nitrosodimethylamine	0.00035
97	N-Nitrosodi-N-propylamine	0.0025
98	N-Nitrosodiphenylamine	2.5
99	Phenantrene	--

	CONSTITUENT	µg/L
100	Pyrene	480
101	***1,2,4 -Trichlorobenzene***	***5***
102	Aldrin	0.00007
103	BHC Alpha	0.0020
104	BHC Beta	0.007
105	BHC Gamma	0.010
106	BHC Delta	--
107	Chlordane	0.00029
108	4,4-DDT	0.0003
109	4,4-DDE	0.0003
110	4,4-DDD	0.00042
111	Dieldrin	0.00007
112	Endosulfan Alpha	0.028
113	Endosulfan Beta	0.028
114	Endosulfan Sulfate	55
115	Endrin	0.018
116	Endrin Aldehyde	0.38
117	Heptachlor	0.00011
118	Heptachlor Epoxide	0.00005
119	PCB 1016	0.000085
120	PCB 1221	0.000085
125	PCB 1260	0.000085
126	Toxaphene	0.00037

Notes:

1. For constituents not shown italicized, the values shown in the Table are fifty percent of the most stringent applicable receiving water objectives (freshwater or human health (consumption of water and organisms) as specified for that pollutant in 40 CFR 131.38[1]).
2. For constituents shown bold and italicized, the values shown in the Table are based on the California Department of Health Services maximum contaminant levels (MCLs) or Notification Level. Notification Level based trigger is underlined.
3. For hardness dependent metals, the hardness value used is 120 mg/L and for pentachlorophenol, the pH value used is 7.5 standard units

[1] *See Federal Register/ Vol. 65, No. 97 / Thursday, May 18, 2000 / Rules and Regulations.*