State of California
California Regional Water Quality Control Board
Santa Ana Region

June 19, 2015

ITEM: *8

SUBJECT: Renewal of Waste Discharge Requirements and Master Reclamation Permit for the Irvine Ranch Water District, Order No. R8-2015-0024, NPDES No. CA8000326, Orange County

DISCUSSION:

See attached Fact Sheet

RECOMMENDATION:

Adopt Order No. R8-2015-0024, NPDES No. CA8000326 as presented.

COMMENT SOLICITATION:

Comments were solicited from the discharger and the following agencies:

U.S. Environmental Protection Agency (WTR-5) – Peter Kozelka, Ph.D
U.S. Army District, Los Angeles, Corps of Engineers - Regulatory Branch
U.S. Fish and Wildlife Service, Carlsbad
State Water Resources Control Board, Division of Water Quality – Phil Isorena
State Water Resources Control Board, Office of the Chief Counsel – David Rice
State Water Resources Control Board, Division of Drinking Water – Oliver Pacifico
California Regional Water Quality Control Board, San Diego Region, Brandi Outwin-Beals
State Department of Fish and Wildlife - Los Alamitos
State Department of Water Resources - Glendale
South Orange County Wastewater Authority – Brennon Flahive
Orange County Health Care Agency, Larry Brennler
Orange County Water District – Jason Dadakis
Orange County Sanitation District – Robert Ghirelli
El Toro Water District – Dennis Cafferty
Southern California Association of Governments – Hasan Ikhrata
The Irvine Company – Dean Kirk
Orange County, Public Works – Chris Crompton
City of Newport Beach – City Manager
City of Irvine – City Manager
Orange County Coastkeeper - Garry Brown
Lawyers for Clean Water – Daniel Cooper

STATE OF CALIFORNIA

CALIFORNIA REGIONAL WATER QUALITY CONTROL BOARD

SANTA ANA REGION

3737 Main Street, Suite 500, Riverside, California 92501-3348
Phone (951) 782-4130 - FAX (951) 781-6288– TDD (951) 782-3221

http://www.waterboards.ca.gov/santaana

ORDER NO. R8-2015-0024
NPDES NO. CA8000326

WASTE DISCHARGE REQUIREMENTS AND MASTER RECLAMATION PERMIT FOR THE IRVINE RANCH WATER DISTRICT WATER RECYCLING PLANTS SURFACE WATER DISCHARGES AND RECYCLED WATER USE

The following Discharger is subject to waste discharge requirements as set forth in this Order:

Table 1. Discharger Information

Discharger/Operator	Irvine Ranch Water District	
Names of Facilities	Michelson Water Recycling Plant (MWRP)	Los Alisos Water Recycling Plant (LAWRP)
Facility Addresses	3512 Michelson Drive	22312 Muirlands Boulevard
	Irvine, CA 92612	Lake Forest, CA 92630
	Orange County	

The discharge by the Irvine Ranch Water District from the discharge points identified below is subject to waste discharge requirements as set forth in this Order:

Table 2. Discharge Locations

Discharge Point	Effluent Description	Discharge Point Latitude	Discharge Point Longitude	Receiving Water
001	Recycled water from MWRP to distribution system	33°39'50"N	117°50'17"W	Irvine GMZ
002	Recycled water from MWRP to San Joaquin Reservoir	33°37'12"N	117°50'39"W	San Joaquin Reservoir & Irvine GMZ
003	Tertiary treated effluent from MWRP	33°43'37"N	117°44'27"W	Rattlesnake Reservoir & Irvine GMZ
004	Tertiary treated effluent	33°38'55"N	117°47'47"W	Sand Canyon Reservoir &

Table 2. Discharge Locations

Discharge Point	Effluent Description	Discharge Point Latitude	Discharge Point Longitude	Receiving Water
	from MWRP			Irvine GMZ
007	Tertiary treated effluent from MWRP	33°42'36"N	117°43'56"W	Syphon Reservoir & Irvine GMZ
008	Recycled water from LAWRP to distribution system	33°38'16"N	117°42'50"W	Irvine GMZ
Storm-007	Pumped stormwater (emergency) from MWRP	33°39'47"N	117°50'16"W	San Diego Creek Reach 1 tributary to Upper Newport Bay
Storm-008	Pumped stormwater (emergency) from MWRP	33°39'51"N	117°50'27"W	San Joaquin Freshwater Marsh tributary to Upper Newport Bay

Table 3. Administrative Information

This Order was adopted by the Regional Water Quality Control Board on:	**June 19, 2015**
This Order shall become effective on:	**July 1, 2015**
This Order shall expire on:	**June 30, 2020**
The Discharger shall file a Report of Waste Discharge in accordance with title 23, California Code of Regulations, as application for issuance of new waste discharge requirements no later than:	**December 29, 2019**
The U.S. Environmental Protection Agency (U.S. EPA) and the California Regional Water Quality Control Board, Santa Ana Region, have classified this discharge as follows:	**Major discharge**

IT IS HEREBY ORDERED, that this Order supersedes Order No. R8-2007-0003 as amended by Order No. R8-2008-0072 and Order No. R8-2012-0014 except for enforcement purposes, and, in order to meet the provisions contained in division 7 of the Water Code (commencing with section 13000) and regulations adopted thereunder, and the provisions of the federal Clean Water Act (CWA) and regulations and guidelines adopted thereunder, the Discharger shall comply with the requirements in this Order.

I, Kurt V. Berchtold, Executive Officer, do hereby certify that this Order with all attachments is a full, true, and correct copy of an Order adopted by the California Regional Water Quality Control Board, Santa Ana Region, on **June 19, 2015**.

Kurt V. Berchtold, Executive Officer

Table of Contents

I. Facility Information 5
II. Findings 5
III. Discharge Prohibitions 13
IV. Effluent Limitations and Discharge Specifications 14
A. Tertiary Treated Effluent Limitations – Discharge Points 003, 004, & 007 14
1. Final Effluent Limitations – Discharge Point 003, 004, and 007 14
2. Interim Effluent Limitations – Not Applicable. 16
3. Toxicity Requirements/Discharge Specifications 16
B. Land Discharge Specifications – Not Applicable 16
C. Reclamation Specifications – Discharge Points 001, 002, & 008 ..... 17~~16~~
D. Dewatered Groundwater Discharge Specifications – Not Applicable. 21
E. Stormwater Discharge Specifications – Storm-007 and Storm-008 21
V. Receiving Water Limitations ..... 22~~21~~
A. Surface Water Limitations ..... 22~~21~~
B. Groundwater Limitations ..... 23~~22~~
VI. Provisions 23
A. Standard Provisions 23
B. Monitoring and Reporting Program (MRP) Requirements 25
C. Special Provisions ..... 26~~25~~
1. Reopener Provisions ..... 26~~25~~
2. Special Studies, Technical Reports and Additional Monitoring Requirements 26
3. Best Management Practices and Pollution Prevention ..... 28~~27~~
4. Construction, Operation and Maintenance Specifications ..... 29~~28~~
5. Special Provisions for Municipal Facilities (POTWs Only) ..... 29~~28~~
6. Other Special Provisions ..... 32~~31~~
7. Compliance Schedules – Not Applicable. ..... 33~~31~~
VII. Compliance Determination ..... 33~~31~~

List of Tables

Table 1. Discharger Information 1
Table 2. Discharge Locations 1
Table 3. Administrative Information 2
Table 4. Facility Information 5
Table 5. Basin Plan Beneficial Uses 9
Table 6. Effluent Limitations at DPs 003, 004, and 007 14
Table 7. Recycled Water Effluent Limitations at DPs 001, 002, & 008 ..... 17~~16~~
Table 8. Stormwater Discharge Limits at Storm-007 & Storm-008 ..... 22~~21~~

List of Attachments

Attachment A – Definitions A-1
Attachment B – Map B-1
Attachment C – Flow Schematic C-1
Attachment D – Standard Provisions D-1
Attachment E – Monitoring and Reporting Program E-1
Attachment F – Fact Sheet F-1
Attachment G – EPA PPL Table G-1
Attachment H – ML Table H-1
Attachment I – Triggers for Monitoring Priority Pollutants I-1
Attachment J – Stormwater Pollution Prevention Plan J-1
Attachment K – Stormwater Monitoring and Reporting Requirements K-1
Attachment L – Acceptance Conditions for UV Disinfection System L-1
Attachment M – Reasonable Potential Analysis M-1
Attachment N – Water Quality Based Effluent Limits Calculation N-1
Attachment O – Total Ammonia-Nitorgen Limit Calculation O-1

I. FACILITY INFORMATION

The following Discharger is subject to waste discharge requirements as set forth in this Order:

Table 4. Facility Information

Discharger/Operator	**Irvine Ranch Water District**	
Names of Facilities	**Michelson Water Recycling Plant (MWRP)**	**Los Alisos Water Recycling Plant (LAWRP)**
Facility Addresses	**3512 Michelson Drive**	**22312 Muirlands Boulevard**
	Irvine, CA 92612	**Lake Forest, CA 92630**
	Orange County	
Facility Contact, Title, and Phone	**Randy C. Lee, Assistant Director of Recycling Operations, Phone: (949) 453-5780**	
Mailing Address	**15600 Sand Canyon Avenue, Irvine, CA 92618**	
Type of Facility	**POTW**	
Facilities Permitted Flow	**28 million gallons per day (mgd)**	**7.5 mgd - secondary treatment and 5.5 mgd - tertiary treatment**
Type of Permitted Flow	**NPDES**	**WDR (Tertiary treated recycled water only)**
Facility Design Flow	**28 mgd - tertiary treatment**	**7.5 mgd secondary treatment and 5.5 mgd - tertiary treatment**

II. FINDINGS

The California Regional Water Quality Control Board, Santa Ana Region (hereinafter Regional Water Board), finds:

A. Background. The Irvine Ranch Water District (hereinafter Discharger or IRWD) owns and operates a sanitary sewer system, two water recycling plants (hereinafter, the Facilities), and a recycled water distribution system. IRWD's service area includes the City of Irvine and portions of Newport Beach, Costa Mesa, Santa Ana, Tustin, Orange, Lake Forest, and unincorporated areas in Orange County. The Discharger owns the Michelson Water Recycling Plant (MWRP) and Los Alisos Water Recycling Plant (LAWRP). The Discharger is currently discharging from these Facilities pursuant to the following waste discharge and producer/user water reclamation requirements:

1. Order No. R8-2007-0003, National Pollutant Discharge Elimination System (NPDES) Permit No. CA8000326, as amended by Order No. R8-2008-0072 and Order No. R8-2012-0004, for tertiary treated wastewater discharges from MWRP. Order No. R8-2007-0003 also regulated discharges of dewatered groundwater from MWRP's on-site wells to Reach 1 of San Diego Creek and San Joaquin Freshwater Marsh.

2. Order No. 94-3 regulates tertiary treated recycled water discharges from LAWRP. Order No. 94-3 was issued to the South Orange County Wastewater Authority

(SOCWA, previously South Orange County Reclamation Authority or SOCRA) by this Regional Water Board to regulate recycled water discharges in this region from IRWD's LAWRP and El Toro Water District's Water Reclamation Plants. Both IRWD and El Toro Water District are members of SOCWA. The Discharger submitted a Report of Waste Discharge, dated April 3, 2012, and applied for NPDES permit renewal to discharge up to 28 million gallons per day (mgd) of tertiary treated wastewater from its MWRP to Rattlesnake Reservoir, Sand Canyon Reservoir, and Syphon Reservoir. Regional Water Board staff requested and received additional information from the Discharger until January 29, 2014. Also, IRWD agreed to consolidate the regulation of the discharges from the Facilities into one permit and discontinue the regulation of the groundwater dewatering discharges from the MWRP under this Order.

For the purposes of this Order, references to the "discharger" or "permittee" in applicable federal and state laws, regulations, plans, or policy are held to be equivalent to references to the Discharger herein.

B. Facility Description. The Discharger owns and operates the MWRP and its wastewater treatment systems consist of preliminary, primary, secondary, and tertiary treatment. Recycled water is directly delivered from Discharge Point 001 (DP-001) to customers for irrigation and other recycled water reuse, except for indirect or direct potable water reuse. Recycled water from MWRP is discharged through DP-003, DP-004 and DP-007 to Rattlesnake Reservoir, Sand Canyon Reservoir, and Syphon Reservoir respectively, for storage and subsequent distribution. These three reservoirs are considered waters of the United States. The recycled water use areas overlie the Irvine Groundwater Management Zone. Also, recycled water can be routed to the Orange County Sanitation District (OCSD) for disposal through their ocean outfall and/or Orange County Water District's (OCWD) Green Acres Project's (GAP's) recycled water distribution system. Both OCSD's ocean outfall discharge and OCWD's GAP are regulated by this Regional Water Board under separate permits.

Because of high groundwater elevation at the MWRP site, dewatering of the shallow groundwater zone is necessary to protect in-ground facilities. The area is dewatered through a network of shallow zone wells with two separate discharge points. These discharge points discharge either into Reach 1 of San Diego Creek or into the San Joaquin Freshwater Marsh. Reach 1 of San Diego Creek and San Joaquin Freshwater Marsh are tributaries to San Diego Creek and waters of the U.S. Order No. R8-2007-0003 also regulated the discharges from these dewatering wells; however, this Order does not regulate the groundwater dewatering discharges from the MWRP (see Attachment F of this Order for details).

Also, the Discharger owns and operates the LAWRP and its wastewater treatment processes include preliminary, secondary, and tertiary treatment. Tertiary-2.2 recycled water is delivered from DP-008 to customers for irrigation and other recycled water reuse, except groundwater recharge. Alternatively, the LAWRP may discharge undisinfected secondary treated effluent to the Pacific Ocean through the Aliso Creek ocean outfall operated by the SOCWA. The discharge to the Pacific Ocean is regulated

by the San Diego Regional Water Quality Control Board through Order No. R9-2012-0013 issued to SOCWA.

C. **Legal Authorities.** This Order is issued pursuant to section 402 of the federal Clean Water Act (CWA) and implementing regulations adopted by the U.S. Environmental Protection Agency (USEPA) and Chapter 5.5, Division 7 of the California Water Code (commencing with Section 13370). It shall serve as a NPDES permit for point source discharges from the MWRP to surface waters. This Order also serves as Waste Discharge Requirements (WDRs) pursuant to Article 4, Chapter 4, Division 7 of the California Water Code (commencing with section 13260) and as a master reclamation permit pursuant to Section 13523.1 of Article 4, Chapter 7, Division 7 of the California Water Code.

D. **Background and Rationale for Requirements**. The Regional Water Board developed the requirements in this Order based on information submitted as part of the application, through monitoring and reporting programs, and other available information. The Fact Sheet (Attachment F), which contains background information and rationale for Order requirements, is hereby incorporated into this Order and constitutes part of the Findings for this Order. Attachments A through E and G through K are also incorporated into this Order.

E. **California Environmental Quality Act (CEQA).** Under Water Code section 13389, this action to adopt an NPDES permit is exempt from the provisions of CEQA, Public Resources Code section 21000 et seq. (*County of Los Angeles v. California State Water Resources Control Board* (2006) 143 Cal.App.4th 985, mod. (Nov. 6, 2006, B184034) 50 Cal.Rptr.3d 619, 632-636). This action also involves the re-issuance of waste discharge requirements for existing Facilities that discharge treated wastewater to land and as such, is exempt from the provisions of the California Environmental Quality Act (commencing with Section 21100) in that the activity is exempt pursuant to Title 14 of the California Code of Regulations Section 15301. The Discharger completed the MWRP capacity expansion project Environmental Impact report, SCH 2005051174 on December 28, 2005. The EIR was certified on February 27, 2006. The CEQA documents for discharge location DP-007, Syphon Reservoir, were completed on December 10, 2009 and a negative declaration was certified on December 14, 2009. The Final Supplemental Environmental Impact Report (SEIR) No. 1 for the MWRP Phase 2 and 3 Capacity Expansion Project, Biosolids Handling Component, SCH 2011031091, was certified on October 23, 2012. The SEIR No. 1 covered the CEQA process for the Biosolids Handling and Energy Recovery Facility and includes the mitigation of potential odor sources with an adequate odor control system, monitoring for presence of endangered species and/or installation of noise control measures during nesting season, and considers measures to protect human health and safety during construction. Regional Board staff has reviewed the above-referenced CEQA documents and finds that if the Discharger complies with the requirements specified in this Order, the discharges regulated under this Order should not have any significant impact on the water quality of the receiving waters.

F. **Technology-Based Effluent Limitations**. Section 301(b) of the CWA and implementing USEPA permit regulations at section 122.44, title 40 of the Code of Federal Regulations[1], require that permits include conditions meeting applicable technology-based requirements at a minimum, and any more stringent effluent limitations necessary to meet applicable water quality standards. The discharges authorized by this Order must meet minimum federal technology-based requirements based on Secondary Treatment Standards at Part 133 and/or Best Professional Judgment (BPJ) in accordance with Part 125, section 125.3. A detailed discussion of the technology-based effluent limitations development is included in the Fact Sheet (Attachment F).

G. **Water Quality-Based Effluent Limitations.** Section 301(b) of the CWA and section 122.44(d) require that permits include limitations more stringent than applicable federal technology-based requirements where necessary to achieve applicable water quality standards. This Order contains requirements, expressed as a technology equivalence requirement, more stringent than secondary treatment requirements that are necessary to meet applicable water quality standards. The rationale for these requirements, which consist of tertiary treatment or equivalent requirements or other provisions, is discussed in the Fact Sheet (Attachment F).

Section 122.44(d)(1)(i) mandates that permits include effluent limitations for all pollutants that are or may be discharged at levels that have the reasonable potential to cause or contribute to an exceedance of a water quality standard, including numeric and narrative objectives within a standard. Where reasonable potential has been established for a pollutant, but there is no numeric criterion or objective for the pollutant, water quality-based effluent limitations (WQBELs) must be established using: (1) USEPA criteria guidance under CWA section 304(a), supplemented where necessary by other relevant information; (2) an indicator parameter for the pollutant of concern; or (3) a calculated numeric water quality criterion, such as a proposed state criterion or policy interpreting the state's narrative criterion, supplemented with other relevant information, as provided in section 122.44(d)(1)(vi).

H. **Water Quality Control Plans.** The Regional Water Board adopted a revised Water Quality Control Plan for the Santa Ana Region (hereinafter Basin Plan) that became effective on January 24, 1995. The Basin Plan designates beneficial uses, establishes water quality objectives, and contains implementation programs and policies to achieve those objectives for all waters in the Santa Ana Region addressed through the Basin Plan. More recently, the Basin Plan was amended significantly to incorporate revised boundaries for groundwater subbasins, now termed "management zones", new nitrate-nitrogen and TDS objectives for the new management zones, and new nitrogen and TDS management strategies applicable to both surface and ground waters.

This Basin Plan Amendment was adopted by the Regional Water Board on January 22, 2004. The State Water Resources Control Board (State Water Board) and Office of

---

1 *All further statutory references are to title 40 of the Code of Federal Regulations unless otherwise indicated.*

Administrative Law (OAL) approved the Amendment on September 30, 2004 and December 23, 2004, respectively. EPA approved the surface water standards components of the N/TDS Amendment on June 20, 2007.

In addition, the Basin Plan implements State Water Resources Control Board (State Water Board) Resolution No. 88-63, which established State policy that all waters should be considered suitable or potentially suitable for municipal or domestic supply (i.e., designated MUN), unless certain exception criteria apply. Pursuant to these criteria, the Regional Water Board excepted certain waters, including Rattlesnake, Syphon, and Sand Canyon Reservoirs, San Diego Creek and Newport Bay, from the MUN designation.

Table 5. Basin Plan Beneficial Uses

Discharge Point	Receiving Water Name	Beneficial Use(s)
001-008, Storm-007 & 008	Irvine Groundwater Management Zone	Present or Potential: Municipal and domestic supply, agricultural supply, industrial service supply, and industrial process supply.
003	Rattlesnake Reservoir	Present or Potential: Agricultural supply, water contact recreation, non-contact water recreation, warm freshwater habitat, wildlife habitat Excepted from Municipal and Domestic Supply
004	Sand Canyon Reservoir	Present or Potential: Agricultural supply, water contact recreation, non-contact water recreation, warm freshwater habitat, wildlife habitat Excepted from Municipal and Domestic Supply
007	Syphon Reservoir	Present or Potential: Agricultural supply, water contact recreation, non-contact water recreation, warm freshwater habitat, wildlife habitat Excepted from Municipal and Domestic Supply
Storm-007	San Diego Creek, Reach 1	Present or Potential: Water contact recreation, non-contact water recreation, warm freshwater habitat, and wildlife habitat Excepted from Municipal and Domestic Supply
Storm-008	San Joaquin Freshwater Marsh	Present or Potential: Water contact recreation; non-contact water recreation; warm freshwater habitat; preservation of biological habitats of special significance; rare, threatened or endangered species; and wildlife habitat Excepted from Municipal and Domestic Supply
Storm-007 & Storm-008	Newport Bay, Upper	Present or Potential: Navigation, Water contact recreation, Non-contact water recreation, Commercial and sport fishing, Preservation of biological habitats of special significance, Wildlife habitat, Rare, threatened or endangered species, Spawning, reproduction, and development, Marine habitat, Shellfish harvesting, and Estuarine habitat. Excepted from Municipal and Domestic Supply

Requirements of this Order implement the Basin Plan.

I. **National Toxics Rule (NTR) and California Toxics Rule (CTR).** USEPA adopted the NTR on December 22, 1992, and later amended it on May 4, 1995 and November 9, 1999. About forty criteria in the NTR applied in California. On May 18, 2000, USEPA adopted the CTR. The CTR promulgated new toxics criteria for California and, in addition, incorporated the previously adopted NTR criteria that were applicable in the state. The CTR was amended on February 13, 2001. These rules contain water quality criteria for priority pollutants.

J. **State Implementation Policy.** On March 2, 2000, the State Water Board adopted the *Policy for Implementation of Toxics Standards for Inland Surface Waters, Enclosed Bays, and Estuaries of California* (State Implementation Policy or SIP). The SIP became effective on April 28, 2000 with respect to the priority pollutant criteria promulgated for California by the USEPA through the NTR and to the priority pollutant objectives established by the Regional Water Board in the Basin Plan. The SIP became effective on May 18, 2000 with respect to the priority pollutant criteria promulgated by the USEPA through the CTR. The State Water Board adopted amendments to the SIP on February 24, 2005 that became effective on July 13, 2005. The SIP establishes implementation provisions for priority pollutant criteria and objectives and provisions for chronic toxicity control. Requirements of this Order implement the SIP.

K. **Pretreatment Requirements.** The treatment plant capacity of MWRP is 28 mgd and there are significant industrial users within its service areas. Consequently, this Order contains requirements for the implementation of an effective pretreatment program pursuant to Section 307 of the Federal Clean Water Act; Parts 35 and 403 of Title 40, Code of Federal Regulations (40 CFR 35 and 40 CFR 403); and/or Section 2233, Title 23, California Code of Regulations.

L. **Alaska Rule.** On March 30, 2000, USEPA revised its regulation that specifies when new and revised state and tribal water quality standards (WQS) become effective for CWA purposes. (40 C.F.R. section 131.21; 65 Fed. Reg. 24641 (April 27, 2000).) Under the revised regulation (also known as the Alaska rule), new and revised standards submitted to USEPA after May 30, 2000, must be approved by USEPA before being used for CWA purposes. The final rule also provides that standards already in effect and submitted to USEPA by May 30, 2000 may be used for CWA purposes, whether or not approved by USEPA.

M. **Stringency of Requirements for Individual Pollutants.** This Order contains both technology-based and water quality based effluent limitations for individual pollutants. The technology-based effluent limitations consist of restrictions on BOD_5 and Suspended Solids. Restrictions on the same pollutants are discussed in Section IV.B.1. of Attachment F. This Order's technology-based pollutant restrictions implement the minimum, applicable federal technology-based requirements. In addition, this Order contains effluent limitations more stringent than the minimum, federal technology-based requirements that are necessary to meet water quality standards. These limitations are not more stringent than required by the CWA.

Water quality-based effluent limitations have been scientifically derived to implement water quality objectives that protect beneficial uses. Both the beneficial uses and the water quality objectives have been approved pursuant to federal law and are the applicable federal water quality standards. To the extent that toxic pollutant water quality-based effluent limitations were derived from the CTR, the CTR is the applicable standard pursuant to section 131.38. The scientific procedures for calculating the individual water quality-based effluent limitations for priority pollutants are based on the CTR-SIP, which was approved by USEPA on May 18, 2000. All beneficial uses and water quality objectives contained in the Basin Plan were approved under state law and submitted to and approved by USEPA prior to May 30, 2000. Any water quality objectives and beneficial uses submitted to USEPA prior to May 30, 2000, but not approved by USEPA before that date, are nonetheless "applicable water quality standards for purposes of the CWA" pursuant to section 131.21(c)(1).

N. **Antidegradation Policy.** Section 131.12 requires that the state water quality standards include an antidegradation policy consistent with the federal policy. The State Water Board established California's antidegradation policy in State Water Board Resolution No. 68-16. Resolution No. 68-16 incorporates the federal antidegradation policy where the federal policy applies under federal law. Resolution No. 68-16 requires that existing quality of waters be maintained unless degradation is justified based on specific findings. The Regional Water Board's Basin Plan implements, and incorporates by reference, both the state and federal antidegradation policies. As discussed in detail in the Fact Sheet (Attachment F), the permitted discharge is consistent with the antidegradation provisions of section 131.12 and State Water Board Resolution No. 68-16.

O. **Anti-Backsliding Requirements.** Sections 402(o)(2) and 303(d)(4) of the CWA and federal regulations at title 40, Code of Federal Regulations section 122.44(l) prohibit backsliding in NPDES permits. These anti-backsliding provisions require effluent limitations in a reissued permit to be as stringent as those in the previous permit, with some exceptions where limitations may be relaxed. All effluent limitations in this Order are at least as stringent as the effluent limitations in the previous Order, except for copper and mercury. The rationale for these change are described in the Fact Sheet (Attachment F). As discussed in detail in the Fact Sheet (Attachment F), the elimination of copper and mercury effluent limitations is consistent with the anti-backsliding requirements of the CWA and federal regulations.

P. **Endangered Species Act.** This Order does not authorize any act that results in the taking of a threatened or endangered species or any act that is now prohibited, or becomes prohibited in the future, under either the California Endangered Species Act (Fish and Game Code sections 2050 to 2097) or the Federal Endangered Species Act (16 U.S.C.A. sections 1531 to 1544). This Order requires compliance with effluent limits, receiving water limits, and other requirements to protect the beneficial uses of waters of the state. The Discharger is responsible for meeting all requirements of the applicable Endangered Species Act.

Q. **Monitoring and Reporting.** Section 122.48 requires that all NPDES permits specify requirements for recording and reporting monitoring results. Water Code sections 13267 and 13383 authorize the Regional Water Board to require technical and monitoring reports. The Monitoring and Reporting Program establishes monitoring and reporting requirements to implement federal and State requirements. This Monitoring and Reporting Program is provided in Attachment E.

R. **Biosolids Requirements.** On February 19, 1993, the USEPA issued a final rule for the use and disposal of sewage sludge, 40 CFR, Part 503. This rule requires that producers of sewage sludge meet certain reporting, handling, and disposal requirements. The State of California has not been delegated the authority to implement this program, therefore, the U.S. Environmental Protection Agency is the implementing agency. The Discharger plans to implement a Biosolids Handling and Energy Recovery Facility Project at the MWRP site, which would treat solids from both Facilities. This Order includes sewage sludge/biosolids requirements pursuant to 40 CFR 503 that are applicable to the Discharger once the Biosolids Handling and Energy Recovery Facility Project has been implemented.

S. **Statewide General Waste Discharge Requirements for Sanitary Sewer Systems.** The State Water Board issued Statewide General Waste Discharge Requirements for Sanitary Sewer Systems, Water Quality Order No. 2006-0003-DWQ (General Order) on May 2, 2006, as amended by Order No. WQ 2008-0002-EXEC, requiring public agencies that own sanitary sewer systems, comprised of more than one mile of pipes or sewer lines, to enroll for coverage under the General Order. The General Order requires agencies to develop sanitary sewer management plans (SSMPs) and report all sanitary sewer overflows (SSOs), among other requirements and prohibitions. This Order requires the Discharger and other governmental agencies[2] to obtain coverage under the General Order. The Discharger has already obtained coverage under the General Order.

T. **Standard and Special Provisions.** Standard Provisions, which apply to all NPDES permits in accordance with section 122.41, and additional conditions applicable to specified categories of permits in accordance with section 122.42, are provided in Attachment D. The Discharger must comply with all standard provisions and with those additional conditions that are applicable under section 122.42. The Regional Water Board has also included in this Order special provisions applicable to the Discharger. A rationale for the special provisions contained in this Order is provided in the attached Fact Sheet (Attachment F).

U. **Provisions and Requirements Implementing State Law.** The provisions/requirements in subsections IV.C., and V.B. of this Order are included to implement state law only. These provisions/requirements are not required or authorized under the federal CWA; consequently, violations of these provisions/requirements are not subject to the enforcement remedies that are available for NPDES violations.

---

2 *Member agencies and sewering agencies discharging wastewater into the facility.*

V. **TMDLs**. On October 11, 2011, the U. S. EPA issued its final decision regarding the State's 2010 Integrated Clean Water Act Sections 303(d) and 305(b) list of impaired water bodies. This list includes Reaches 1 and 2 of San Diego Creek and Upper and Lower Newport Bay. One or more of these water bodies were determined to be impaired by one or more pollutants, including: fecal coliform, nutrients, metals and pesticides. Nutrient, fecal coliform, sediment, and toxic pollutants TMDLs have been established for the San Diego Creek/Newport Bay watershed. There is no discharge of treated wastewater or storm water to these impaired waterbodies under normal conditions (overflow from Sand Canyon is allowed only when the flow in San Diego Creek at Campus Drive is above 50 cubic feet per second that is under extreme storm conditions). This Order does implement relevant TMDL requirements (see Attachment F).

W. **Notification of Interested Parties.** The Regional Water Board has notified the Discharger and interested agencies and persons of its intent to prescribe Waste Discharge Requirements for the discharge and has provided them with an opportunity to submit their written comments and recommendations. Details of notification are provided in the Fact Sheet (Attachment F) of this Order.

X. **Consideration of Public Comment.** The Regional Water Board, in a public meeting, heard and considered all comments pertaining to the discharge. Details of the Public Hearing are provided in the Fact Sheet (Attachment F) of this Order.

III. DISCHARGE PROHIBITIONS

A. Wastewater discharged to reservoirs shall be limited to tertiary treated and disinfected effluent that meets the conditions in Section IV.A.

B. Discharge of wastewater at a location or in a manner different from those described in this Order is prohibited, unless otherwise authorized by a separate action by the Regional Water Board or its Executive Officer.

C. The bypass or overflow of untreated wastewater or wastes to surface waters or surface water drainage courses is prohibited, except as allowed in Standard Provision I.G. of Attachment D, Federal Standard Provisions.

D. The discharge of any substances in concentrations toxic to animal or plant life is prohibited.

E. The discharge of any radiological, chemical, or biological warfare agent or high level radiological waste is prohibited.

F. The discharge of recycled water to San Diego Creek or its tributaries in any manner is prohibited except under the following conditions:

1. Specifically authorized by a separate action by the Regional Water Board or its Executive Officer.

2. Recycled water that is stored in Sand Canyon Reservoir may be discharged to San Diego Creek or its tributaries only when the storm water runoff from the reservoir watershed causes an overflow from Sand Canyon Wash during rainfall events occurring over a 60-day period or less that result in rainfall equivalent to that from a 25-year, 24-hour storm event.

3. When the Division of Safety of Dams requires the releases through the emergency valves for dam safety or other reasons.

4. For any discharge of recycled water to San Diego Creek or its tributaries from the Facility when the flow in San Diego Creek at Campus Drive is less than 50 cubic feet per second, the Discharger shall have an approved offset program to offset any nutrient discharges in excess of 1 mg/L total inorganic nitrogen.

IV. EFFLUENT LIMITATIONS AND DISCHARGE SPECIFICATIONS

A. Tertiary Treated Effluent Limitations – Discharge Points 003, 004, & 007

Unless otherwise specifically specified hereinafter, compliance with the following effluent limitations is measured at monitoring locations M-003A, M-004A, and M-007 as described in the attached MRP (Attachment E).

1. Final Effluent Limitations – Discharge Point 003, 004, and 007

a. The Discharger shall maintain compliance with the following effluent limitations:

Table 6. Effluent Limitations at DPs 003, 004, and 007

Parameter	Units	Effluent Limitations				
		Average Monthly	Average Weekly	Maximum Daily	Instantaneous Minimum	Instantaneous Maximum
Biochemical Oxygen Demand 5-day @ 20°C	mg/L	20	30	--	--	--
	lbs/day	4,670	7,006			
Total Suspended Solids	mg/L	20	30	--	--	--
	lbs/day	4,670	7,006			
pH[3]	standard units	--	--	--	6.5	8.5
Total Chlorine Residual[4]	mg/L	--	--	--	--	0.1

[3] *See Section VII.L. – Compliance Determination.*

[4] *Compliance with this limitation is to be achieved at M-003B, M-004B, and M-007as described in the attached MRP (Attachment E).*

Table 6. Effluent Limitations at DPs 003, 004, and 007

Parameter	Units	Effluent Limitations				
		Average Monthly	Average Weekly	Maximum Daily	Instantaneous Minimum	Instantaneous Maximum
Ammonia-Nitrogen	mg/L	0.75	--	--	--	--
Dichlorobromomethane	µg/L	46		71		

Note: Mass loadings for BOD & TSS = concentration (mg/L) x 8.34 x 28 mgd

b. **Percent Removal:** The average monthly percent removal of BOD 5-day 20°C and total suspended solids shall not be less than 85 percent.

c. **TDS Limitations** - The 12-month flow weighted running average TDS constituent concentrations shall not exceed 720 mg/L.

d. The discharge shall at all times be adequately oxidized, filtered, and disinfected treated wastewater and shall meet the following limitations.

(1) When filtration is through natural undisturbed soils or a bed of filter media, the turbidity of the filter effluent shall not exceed any of the following:

(a) Average of 2 Nephelometric Turbidity Unit (NTU) within any 24-hour period;

(b) 5 NTU more than 5 percent of the time in any 24-hour period; and

(c) 10 NTU at any time.

(2) The disinfected effluent shall meet the following:

(a) When chlorine disinfection process is utilized following filtration, a CT (the product of total chlorine residual and modal contact time measured at the same point) value of not less than 450 milligram-minutes per liter at all times with a modal contact time of at least 90 minutes, based on peak dry weather design flow shall be provided.

(b) When a disinfection process combined with the filtration process is utilized, the combined process shall demonstrate inactivation and/or removal of 99.999 percent of the plaque-forming units of F-specific bacteriophage MS2, or polio virus in the wastewater. A virus that is at least as resistant to disinfection as polio virus may be used for purposes of the demonstration.

(c) The weekly average concentration of total coliform bacteria shall not exceed a Most Probable Number (MPN) of 2.2 total coliform bacteria per 100 milliliters (ml). (see Compliance Determination VII.K.1., below)

(d) The number of total coliform bacteria shall not exceed an MPN of 23 total coliform bacteria per 100 ml in more than one sample in any 30-day period.

(e) No total coliform bacteria sample shall exceed an MPN of 240 total coliform bacteria per 100 ml.

(f) Where ultraviolet (UV) disinfection is used for disinfection, UV disinfection shall meet the requirements specified in the Ultraviolet Disinfection Guidelines for Drinking Water and Water Reuse, published by the National Water Research Institute, Third Edition, and/or the acceptance conditions specified by the California State Water Resources Control Board's (SWRCB's) Division of Drinking Water (DDW) in a letter dated February 25, 2015 addressed to this Regional Water Board's Executive Officer, which is included in this Order as Attachment L, and/or modified acceptance conditions specified by the SWRCB's DDW that supersede the acceptance conditions specified in the February 25, 2015 letter. The facility must be operated and maintained in accordance with a SWRCB's DDW approved operations plan, which is part of the Title 22 Engineering Report. The acceptance conditions and approved operations plan included in the Title 22 Engineering Report shall become an enforceable part of this Order.

(3) The turbidity of disinfected tertiary recycled water that is passed through a microfiltration, ultrafiltration, nanofiltration, or reverse osmosis membrane shall not exceed any of the following:

(a) 0.2 Nephelometric Turbidity Unit (NTU) more than 5 percent of the time within a 24-hour period; and

(b) 0.5 NTU at any time.

e. There shall be no visible oil and grease in the discharge.

2. Interim Effluent Limitations – Not Applicable.

3. Toxicity Requirements/Discharge Specifications

a. There shall be no acute or chronic toxicity in the plant effluent nor shall the plant effluent cause any acute or chronic toxicity in the receiving water. All waters shall be maintained free of toxic substances in concentrations which are toxic to, or which produce detrimental physiological responses in human, plant, animal, or indigenous aquatic life. This Order contains no numeric limitation for toxicity. However, the Discharger shall conduct chronic toxicity monitoring.

b. The Discharger shall implement the accelerated monitoring as specified in Attachment E when the result of any single chronic toxicity test of the effluent exceeds 1.0 TUc.

B. Land Discharge Specifications – Not Applicable

C. Reclamation Specifications – Discharge Points 001, 002, & 008

1. Upon the effective date of this Order, the use of recycled water for parks, landscape irrigation, and/or other similar uses shall maintain compliance with the following limitations. Compliance is to be measured at representative monitoring locations REC-001, REC-002, REC-003 where representative samples of recycled water can be obtained for laboratory testing and analysis as described in the attached Monitoring and Reporting Program (Attachment E). The Discharger shall submit for approval by the Executive Officer other monitoring location(s) not specified herein where representative samples of recycled water could be obtained for laboratory testing and analysis with compliance measured at monitoring locations REC-001, REC-002, and REC-003.

   a. Physical/Biological Limitations:

Table 7. Recycled Water Effluent Limitations at DPs 001, 002, & 008

Parameter	Units	Effluent Limitations			
		Average Monthly	Average Weekly	Instantaneous Minimum	Instantaneous Maximum
Biochemical Oxygen Demand 5-day @ 20°C	mg/L	20	30	- -	- -
Total Suspended Solids	mg/L	20	30	- -	- -
pH	standard units	- -	- -	6	9

   b. TDS Limitations: For recycled water use on sites overlying the Irvine Groundwater Management Zone, the 12-month flow weighted running average TDS concentration shall not exceed 910 mg/L.

   c. Recycled water described in Section 60307(a) of Division 4, Chapter 3, Title 22, California Code of Regulations and for irrigation of food crops, parks and playground, school yards, residential landscaping and other irrigation uses not specified in Section 60304(a) of Division 4, Chapter 3, Title 22, California Code of Regulations or not prohibited in other Sections of the California Code of Regulations shall at all times be adequately oxidized, filtered, and disinfected tertiary treated wastewater and shall meet the following limitations:

      (1) The turbidity of the filter effluent shall not exceed any of the following:

         (a) Average of 2 Nephelometric Turbidity Units (NTU) within any 24-hour period;
         (b) 5 NTU more than 5 percent of the time in any 24-hour period; and
         (c) 10 NTU at any time.

      (2) The disinfected effluent shall meet the following:

(a) The weekly average total coliform bacteria[5] shall not exceed a Most Probable Number (MPN) of 2.2 total coliform bacteria per 100 milliliters (ml).

(b) The number of total coliform organism shall not exceed an MPN of 23 total coliform bacteria per 100 ml in more than one sample in any 30-day period.

(c) No total coliform sample shall exceed an MPN of 240 total coliform bacteria per 100 ml.

(d) When chlorine disinfection process is utilized following filtration, a CT (the product of total chlorine residual and modal contact time[6] measured at the same point) value of not less than 450 milligram-minutes per liter at all times with a modal contact time of at least 90 minutes, based on peak dry weather design flow shall be provided.

(e) When a disinfection process combined with the filtration process is utilized, the combined process shall demonstrate inactivation and/or removal of 99.999 percent of the plaque-forming units of F-specific bacteriophage MS2, or polio virus in the wastewater. A virus that is at least as resistant to disinfection as polio virus may be used for purposes of the demonstration.

(f) Where ultraviolet (UV) disinfection is used for disinfection, UV disinfection shall meet the requirements specified in the Ultraviolet Disinfection Guidelines for Drinking Water and Water Reuse, published by the National Water Research Institute, Third Edition, and/or the acceptance conditions specified by the California State Water Resources Control Board's (SWRCB's) Division of Drinking Water (DDW) in a letter dated February 25, 2015 addressed to this Regional Water Board's Executive Officer, which is included in this Order as Attachment L, and/or modified acceptance conditions specified by the SWRCB's DDW that supersede the acceptance conditions specified in the February 25, 2015 letter. The facility must be operated and maintained in accordance with a SWRCB's DDW approved operations plan, which is part of the Title 22 Engineering Report. The acceptance conditions and operations plan included in the Title 22 Engineering Report shall become an enforceable part of this Order.

(3) The turbidity of disinfected tertiary recycled water that is passed through a microfiltration, ultrafiltration, nanofiltration, or reverse osmosis membrane shall not exceed any of the following:

(a) 0.2 Nephelometric Turbidity Unit (NTU) more than 5 percent of the time within any 24-hour period; and

(b) 0.5 NTU at any time.

---

5 *See Compliance Determination Section VII.K.1.*

6 *Modal contact time shall be calculated daily based on the minimum one-hour average value in a 24-hour period.*

d. Recycled water used for irrigation of food crops where the edible portion is produced above ground and not contacted by the recycled water shall at all times be adequately oxidized and disinfected so that average weekly total coliform bacteria in the disinfected effluent does not exceed a most probable number (MPN) of 2.2 per 100 milliliters utilizing the bacteriological results of the last seven days for which analyses have been completed, and the number of total coliform bacteria does not exceed an MPN of 23 per 100 milliliters in more than one sample.

e. Recycled water used for the uses listed below shall be an oxidized and disinfected water so that the average weekly total coliform bacteria[7] in the disinfected effluent does not exceed a most probable number (MPN) of 23 per 100 milliliters utilizing the bacteriological results of the last seven days for which analyses have been completed, and the number of total coliform bacteria does not exceed an MPN of 240 per 100 milliliters in more than one sample in any 30 day period.

   (1) Industrial boiler feed, nonstructural fire fighting, backfill consolidation around nonpotable piping, soil compaction, mixing concrete, dust control on roads and streets, cleaning roads, sidewalks and outdoor work areas and industrial process water that will not come into contact with workers.
   (2) Irrigation of cemeteries, freeway landscaping, restricted access golf courses, ornamental nursery stock and sod farms where access by the general public is not restricted, pasture for animals producing milk for human consumption, and any nonedible vegetation where access is controlled so that irrigated area cannot be used as if it were part of a park, playground or school yard.

f. For recycled water uses specified in Sections 60304 and 60307 of Title 22 where filtration is provided pursuant Section 60301.320(a) and coagulation is not used as part of the treatment process, the Discharger shall comply with the following:

   (1) The turbidity of the influent to the filters is continuously measured and the influent turbidity does not exceed 5 NTU for more than 15 minutes and never exceeds 10 NTU;
   (2) The filter effluent turbidity shall not exceed 2 NTU; and;
   (3) Should the filter influent turbidity exceed 5 NTU for more than 15 minutes, chemical addition shall be automatically activated if available, if not, the wastewater shall be diverted.

2. For new reuse sites, the use of recycled water shall only commence after the California State Water Resources Control Board's (SWRCB's) Division of Drinking Water (DDW) grants final approval for such use. If SWRCB's DDW does not respond or does not explicitly disapprove the use of recycled water at new reuse sites within 30 days of receipt of the information required in IV.C.7., below, then the

---

7 *See Compliance Determination Section VII.K.2.*

Discharger may assume final approval by SWRCB's DDW and may commence distribution of recycled water at the new site(s).The Discharger shall provide the Regional Water Board with a copy of the SWRCB's DDW approval letter, if provided, within 30 days of the approval notice.

3. The Discharger shall be responsible for assuring that recycled water is delivered and utilized in conformance with this Order, the recycling criteria contained in Title 22, Division 4, Chapter 3, Sections 60301 through 60355, California Code of Regulations. The Discharger shall conduct periodic inspections of the facilities of the recycled water users to monitor compliance by the users with this Order.

4. The Discharger shall establish and enforce Rules and Regulations for Recycled Water Users, governing the design and construction of recycled water use facilities and the use of recycled water in accordance with the uniform statewide recycling criteria established pursuant to the California Water Code Section 13521.

   a. Use of recycled water by the Discharger shall be consistent with its Rules and Regulations for Recycled Water Use.

   b. Any revisions made to the Rules and Regulations shall be subject to the review of the SWRCB's DDW and the County Environmental Health Department. The revised Rules and Regulations or a letter certifying that the Discharger's Rules and Regulations contain the updated provisions in this Order, shall be submitted to the Regional Water Board within 60 days of adoption of this Order by the Regional Water Board.

5. The Discharger shall, within 60 days of the adoption of this Order, review and update as necessary its program to conduct compliance inspections of recycled water use sites. Inspections shall determine the status of compliance with the Discharger's Rules and Regulations for Recycled Water Use.

6. The storage, delivery, or use of recycled water shall not individually or collectively, directly or indirectly, result in a pollution or nuisance, or adversely affect water quality, as defined in the California Water Code

7. Prior to delivering recycled water to any new user, the Discharger shall submit to SWRCB's DDW and the County Environmental Health Department a report containing the information specified in a-f, below, for review and approval. The Discharger shall maintain this new user information and make it available onsite during inspection upon request by Regional Water Board, SWRCB's DDW and/or County Environmental Health Department staff. This new user information shall be submitted to the Regional Water Board upon request by the Executive Officer.

   a. The average number of persons estimated to be served at each use site area on a daily basis.

b. The specific boundaries of the proposed use site area, including a map showing the location of each facility, drinking water fountain, and impoundment to be used.

c. The person or persons responsible for operation of the recycled water system at each use area.

d. The specific use to be made of the recycled water at each use area.

e. The methods to be used to assure that the installation and operation of the recycled system will not result in cross connections between the recycled water and potable water piping systems. This shall include a description of the pressure, dye or other test methods to be used to test the system.

f. Plans and specifications which include following:
   (1) Proposed piping system to be used.
   (2) Pipe locations of both the recycled and potable systems.
   (3) Type and location of the outlets and plumbing fixtures that will be accessible to the public.
   (4) The methods and devices to be used to prevent backflow of recycled water into the potable water system.
   (5) Plan notes relating to specific installation and use requirements.

8. The Discharger shall require the user(s) to designate an on-site supervisor responsible for the operation of the recycled water distribution system within the recycled water use area. The supervisor shall be responsible for complying with this Order, prevention of potential hazards, the installation, operation and maintenance of the distribution system as approved by SWRCB's DDW, and update of the distribution and irrigation system plans in "as-built" form.

9. Recycled water shall at all times be maintained within the property lines of any user. There shall be no direct or indirect discharge of recycled water into surface waters except where allowed and described in this Order.

D. Dewatered Groundwater Discharge Specifications – Not Applicable.

E. Stormwater Discharge Specifications – Storm-007 and Storm-008

1. The Nutrient TMDL for the San Diego Creek/Newport Bay watershed specifies wasteload and load allocations for total nitrogen mass inputs to the San Diego Creek/Newport Bay watershed from identified sources. To implement the nutrient TMDL, this Order includes a total nitrogen (TN) effluent limit of 1 mg/L for stormwater discharges to Reach 1 of San Diego Creek, which is tributary to Newport Bay. The Discharger complies with this requirement by implementing a nitrogen offset program. TN discharges in excess of 1 mg/L will be offset by nitrogen reductions as the result of the Discharger's diversion and treatment of San Diego

Creek flows in the IRWD constructed wetlands in the San Joaquin Freshwater Marsh.

2. Attachments J & K show the requirements for implementing a stormwater pollution prevention plan and discharge monitoring and reporting.

3. Summary of Effluent Limitations at Storm-007 and Storm-008

Table 8. Stormwater Discharge Limits at Storm-007 & Storm-008

Parameter	Units	Effluent Limitations			
		Average Monthly	Maximum Daily	Instantaneous Minimum	Instantaneous Maximum
pH	standard units	--	--	6.5	8.5
Oil and Grease	mg/L	15	--	--	25
Total Suspended Solids	mg/L	100	--	--	400
Total Petroleum Hydrocarbons	µg/L	--	100	--	--
Total Nitrogen to Reach 1 of San Diego Creek and tributary thereto	mg/L	1	--	--	--

4. Storm water discharges from the Facilities shall be in compliance with State Water Resources Control Board's Order No. 2014-0057-DWQ, except that the Discharger does not have to file a Notice of Intent or pay a separate fee for coverage under the State Water Board's order.

V. RECEIVING WATER LIMITATIONS

A. Surface Water Limitations

1. Receiving water limitations are based upon water quality objectives contained in the Basin Plan. As such, they are a required part of this Order. The discharge shall not cause the following in San Joaquin Freshwater Marsh, Rattlesnake, Syphon, and Sand Canyon reservoirs, Reach 1 of the San Diego Creek and downstream reaches:

   a. Coloration of the receiving waters, which causes a nuisance or adversely affects beneficial uses.

   b. Deposition of oil, grease, wax or other materials in the receiving waters in concentrations which result in a visible film or in coating objects in the water, or which cause a nuisance or affect beneficial uses.

   c. An increase in the amounts of suspended or settleable solids in the receiving waters, which will cause a nuisance or adversely affect beneficial uses as a result of controllable water quality factors.

   d. Taste or odor-producing substances in the receiving waters at concentrations, which cause a nuisance or adversely affect beneficial uses.

e. The presence of radioactive materials in the receiving waters in concentrations, which are deleterious to human, plant or animal life.

f. The depletion of the dissolved oxygen concentration below 5.0 mg/L.

g. The temperature of the receiving waters to be raised above 90°F (32°C) during the period of June through October, or above 78°F (26°C) during the rest of the year.

h. The concentration of pollutants in the water column, sediments, or biota to adversely affect the beneficial uses of the receiving water. The discharge shall not result in the degradation of inland surface water communities and populations, including vertebrate, invertebrate, and plant species.

2. The discharge of wastes shall not cause a violation of any applicable water quality standards for receiving waters adopted by the Regional Water Board or State Water Board, as required by the Clean Water Act and regulations adopted thereunder.

3. Pollutants not specifically mentioned and limited in this Order shall not be discharged at levels that will bioaccumulate in aquatic resources to levels, which are harmful to human health.

B. Groundwater Limitations

1. The use of recycled water shall not cause the underlying groundwater to be degraded, to exceed water quality objectives, unreasonably affect beneficial uses, or cause a condition of pollution or nuisance.

VI. PROVISIONS

A. Standard Provisions

1. The Discharger shall comply with all Standard Provisions included in Attachment D of this Order.

2. The Discharger shall comply with the following provisions:

a. Failure to comply with provisions or requirements of this Order, or violation of other applicable laws or regulations governing discharges from this Facility, may subject the Discharger to administrative or civil liabilities, criminal penalties, and/or other enforcement remedies to ensure compliance. Additionally, certain violations may subject the Discharger to civil or criminal enforcement from appropriate local, state, or federal law enforcement entities.

b. In the event the Discharger does not comply or will be unable to comply for any reason, with any prohibition, discharge limitations (e.g., maximum daily effluent

limitation), or receiving water limitation of this Order, the Discharger shall notify the Regional Water Board by telephone (951) 782-4130 or by email to info8@waterboards.ca.gov within 24 hours of having knowledge of such noncompliance, and shall confirm this notification in writing within five days, unless the Regional Water Board waives confirmation. The written notification shall state the nature, time, duration, and cause of noncompliance, and shall describe the measures being taken to remedy the current noncompliance and, prevent recurrence including, where applicable, a schedule of implementation. Other noncompliance requires written notification with the details discussed above with the next self-monitoring report.

c. Neither the treatment nor the discharge of pollutants shall create a pollution, contamination, or nuisance as defined by Section 13050 of the CWC.

d. The Discharger shall take all reasonable steps to minimize or correct any adverse impact on the environment resulting from noncompliance with this Order, including such accelerated or additional monitoring as may be necessary to determine the nature and impact of the noncomplying discharge.

e. This Order may be modified, revoked and reissued, or terminated for cause including, but not limited to, the following:

   (1) Violation of any terms or conditions of this Order;
   (2) Obtaining this Order by misrepresentation or failure to disclose fully all relevant facts, or;
   (3) In addition to any other grounds specified herein, this Order may be modified or revoked at any time if, on the basis of any data, the Regional Water Board determines that continued discharges may cause unreasonable degradation of the aquatic environment.

f. If an effluent standard or discharge prohibition (including any schedule of compliance specified in such effluent standard or prohibition) is established under Section 307 (a) of the Clean Water Act for a toxic pollutant which is present in the discharge, and such standard or prohibition is more stringent than any limitation for that pollutant in this Order, this Order may be modified or revoked and reissued to conform to the effluent standard or discharge prohibition.

g. The Discharger shall file with the Regional Water Board a Report of Waste Discharge at least 180 days before making any material change in the character, location, or volume of the discharge. A material change includes, but is not limited to, the following:

   (1) Adding a major industrial waste discharge to a discharge of essentially domestic sewage, or adding a new process or product by an industrial facility resulting in a change in the character of the waste.

(2) Significantly changing the disposal method or location, such as changing the disposal to another drainage area or water body.
(3) Significantly changing the method of treatment.
(4) Increasing the treatment plant design capacity beyond that specified in this Order.

h. The provisions of this Order are severable, and if any provision of this Order, or the application of any provision of this Order to any circumstance, is held invalid, the application of such provision to other circumstances, and the remainder of this Order, shall not be affected thereby.

i. The Discharger shall maintain a copy of this Order at the site so that it is available to site operating personnel at all times. Key operating personnel shall be familiar with its content.

j. The Discharger shall optimize chemical additions needed in the treatment process to meet waste discharge requirements so as to minimize total dissolved solid increases in the treated wastewater.

k. Collected screenings, sludge, and other solids removed from liquid wastes shall be disposed of in a manner approved by the Regional Water Board's Executive Officer.

l. If the Discharger demonstrates a correlation between the biological oxygen demand (BOD_5) and total organic carbon (TOC) concentrations in the effluent to the satisfaction of the Executive Officer, compliance with the BOD_5 limits contained in this Order may be determined based on analyses of the TOC of the effluent.

m. In the event of any change in control or ownership of land or waste discharge facility presently owned or controlled by the Discharger, the Discharger shall notify the succeeding owner or operator of the existence of this Order by letter, a copy of which shall be forwarded to the Regional Water Board.

n. The treatment facilities shall be designed, constructed, operated, and maintained to prevent inundation or washout due to floods with a 100-year return frequency.

B. Monitoring and Reporting Program (MRP) Requirements

The Discharger shall comply with the MRP, and future revisions thereto, in Attachment E of this Order. This monitoring and reporting program may be modified by the Executive Officer at any time during the term of this Order, and may include an increase in the number of parameters to be monitored, the frequency of the monitoring or the number and size of samples to be collected. Any increase in the number of parameters to be monitored, the frequency of the monitoring or the number and size of samples to be collected may be reduced back to the levels specified in the original monitoring and reporting program at the discretion of the Executive Officer.

C. Special Provisions

1. Reopener Provisions

a. This Order will be reopened to address any changes in State or federal plans, policies or regulations that would affect the quality requirements for the discharges.

b. This Order may be reopened to include effluent limitations for pollutants determined to be present in the discharge in concentrations that pose a reasonable potential to cause or contribute to violations of water quality objectives.

c. This Order may be reopened and modified in accordance with the requirements set forth at 40 CFR 122 and 124, to include the appropriate conditions or limits to address demonstrated effluent toxicity based on newly available information, or to implement any EPA-approved new State water quality standards applicable to effluent toxicity.

d. This Order may be reopened for modification, or revocation and reissuance, as a result of the detection of a reportable priority pollutant generated by special conditions included in this Order. These special conditions may be, but are not limited to, fish tissue sampling, whole effluent toxicity, monitoring requirements on internal waste stream(s), and monitoring for surrogate parameters. Additional requirements may be included in this Order as a result of the special condition monitoring data.

e. This Order may be reopened to incorporate appropriate biosolids requirements if the State Water Board and the Regional Water Board are given the authority to implement regulations contained in 40 CFR 503.

2. Special Studies, Technical Reports and Additional Monitoring Requirements

a. By August 31, 2015, the Discharger shall submit for approval by the Executive Officer, a report that details the manner in which sampling, monitoring and reporting will be performed as required in this Order.

b. By August 31, 2015, the Discharger shall submit a letter informing this Regional Water Board regarding their decision to use an alternative USEPA approved method for free cyanide testing that is not prone to significant interference from the use of sodium hydroxide as a sample preservative. The letter should include a description of the test method selected by the Discharger for the determination of free cyanide in the effluent samples.

c. If the Discharger proposes to receive hauled-in anaerobically digestible material for injection into anaerobic digester, prior to initiation of the hauling, the Discharger shall notify this Regional Water Board and develop and implement standard operating procedures (SOPs) for this activity. The SOPs shall address material handling, including unloading, screening, or other processing prior to anaerobic digestion; transportation; spill prevention; and spill response. In

addition, the SOPs shall address avoidance of the introduction of materials that could cause interference, pass-through, or upset of the treatment processes; avoidance of prohibited material, vector control, odor control, operation and maintenance, and the disposition of any solid waste segregated from introduction to the digester. The Discharger shall provide training to its staff on the SOPs and shall maintain records for a minimum of three years for each load received, describing the hauler, waste type, and quantity received. Also, the Discharger shall maintain records for a minimum of three years for the disposition, location, and quantity of cumulative pre-digestion-segregated solid waste hauled off-site.

d. Toxicity Reduction Requirements.

(1) The Discharger shall develop an Initial Investigation Toxicity Reduction Evaluation (IITRE) work plan that describes the steps the Discharger intends to follow if required by Toxicity Reduction Requirements b.(2), below. The work plan shall include at a minimum:

(a) A description of the investigation and evaluation techniques that will be used to identify potential causes/sources of the exceedance, effluent variability, and/or efficiency of the treatment system in removing toxic substances. This shall include a description of an accelerated chronic toxicity testing program.

(b) A description of the methods to be used for investigating and maximizing in-house treatment efficiency and good housekeeping practices.

(c) A description of the evaluation process to be used to determine if implementation of a more detailed TRE\TIE is necessary.

(2) The Discharger shall implement the IITRE work plan whenever the results of chronic toxicity tests of the effluent exceed:

(a) A two month median value of 1.0 TUc for survival or reproduction endpoint or,

(b) Any single test value of 1.7 TUc for survival endpoint.

(3) The Discharger shall develop a detailed Toxicity Reduction Evaluation and Toxicity Identification Evaluation (TRE/TIE) work plan that shall describe the steps the Discharger intends to follow if the implemented IITRE fails to identify the cause of, or to rectify, the toxicity.

(4) The Discharger shall use as guidance, at a minimum, EPA manuals EPA/600/2-88/070 (industrial), EPA/600/4-89-001A (municipal), EPA/600/6-91/005F (Phase I), EPA/600/R-92/080 (Phase II), and EPA-600/R-92/081 (Phase III) to identify the cause(s) of toxicity. If during the life of this Order the aforementioned EPA manuals are revised or updated, the revised/updated manuals may also be used as guidance. The detailed TRE/TIE work plan shall include:

(a) Further actions to investigate and identify the cause of toxicity;
(b) Actions the Discharger will take to mitigate the impact of the discharge and to prevent the recurrence of toxicity; and
(c) A schedule for these actions.

(5) The Discharger shall implement the TRE/TIE workplan if the IITRE fails to identify the cause of, or rectify, the toxicity, or if in the opinion of the Executive Officer, the IITRE does not adequately address an identified toxicity problem.

(6) The Discharger shall assure that adequate resources are available to implement the required TRE/TIE.

3. Best Management Practices and Pollution Prevention

a. Pollutant Minimization Program

(1) The Discharger shall develop and conduct a Pollutant Minimization Program (PMP) as further described below when there is evidence (e.g., sample results reported as DNQ when the effluent limitation is less than the MDL, sample results from analytical methods more sensitive than those methods required by this Order, presence of whole effluent toxicity, health advisories for fish consumption, results of benthic or aquatic organism tissue sampling) that a priority pollutant is present in the effluent above an effluent limitation and either:

(a) A sample result is reported as DNQ and the effluent limitation is less than the RL; or
(b) A sample result is reported as ND and the effluent limitation is less than the MDL.

(2) The PMP shall include, but not be limited to, the following actions and submittals acceptable to the Regional Water Board:

(a) An annual review and semi-annual monitoring of potential sources of the reportable priority pollutant(s), which may include fish tissue monitoring and other bio-uptake sampling;

(b) Quarterly monitoring for the reportable priority pollutant(s) in the influent to the wastewater treatment system;

(c) Submittal of a control strategy designed to proceed toward the goal of maintaining concentrations of the reportable priority pollutant(s) in the effluent at or below the effluent limitation;

(d) Implementation of appropriate cost-effective control measures for the reportable priority pollutant(s), consistent with the control strategy; and

(e) An annual status report that shall be sent to the Regional Water Board including:

i. All PMP monitoring results for the previous year;
ii. A list of potential sources of the reportable priority pollutant(s);
iii. A summary of all actions undertaken pursuant to the control strategy; and
iv. A description of actions to be taken in the following year.

4. Construction, Operation and Maintenance Specifications

a. The Discharger's wastewater treatment plant shall be supervised and operated by persons possessing certificates of appropriate grade pursuant to Title 23, Division 3, Chapter 14, California Code of Regulations.

b. The Discharger shall provide safeguards to assure that should there be reduction, loss, or failure of electric power, the Discharger will comply with the requirements of this Order.

c. The Discharger shall update as necessary, the "Operation and Maintenance Manual (O&M Manual)" which it has developed for the treatment facility to conform to latest plant changes and requirements. The O&M Manual shall be readily available to operating personnel onsite. The O&M Manual shall include the following:

(1) Description of the treatment plant table of organization showing the number of employees, duties and qualifications and plant attendance schedules (daily, weekends and holidays, part-time, etc). The description should include documentation that the personnel are knowledgeable and qualified to operate the treatment facility so as to achieve the required level of treatment at all times.
(2) Detailed description of safe and effective operation and maintenance of treatment processes, process control instrumentation and equipment.
(3) Description of laboratory and quality assurance procedures.
(4) Process and equipment inspection and maintenance schedules.
(5) Description of safeguards to assure that, should there be reduction, loss, or failure of electric power, the Discharger will be able to comply with requirements of this Order.
(6) Description of preventive (fail-safe) and contingency (response and cleanup) plans for controlling accidental discharges, and for minimizing the effect of such events. These plans shall identify the possible sources (such as loading and storage areas, power outage, waste treatment unit failure, process equipment failure, tank and piping failure) of accidental discharges, untreated or partially treated waste bypass, and polluted drainage.

5. Special Provisions for Municipal Facilities (POTWs Only)

a. The Discharger's sanitary sewer system is part of the system that is subject to this Order. As such, the Discharger must properly operate and maintain its sanitary sewer system (40 C.F.R. § 122.41(e)). The Discharger must report any non-compliance (40 C.F.R. § 122.41(l)(6) and (7)) and mitigate any discharge from the sanitary sewer system in violation of this Order (40 C.F.R. § 122.41(d)). See the Order at Standard Provision VI.A.2.b. and Attachment D, subsections I.C., I.D., V.E., and V.H.

   Furthermore, the Statewide General Waste Discharge Requirements for Sanitary Sewer System, Order No. 2006-0003 DWQ (General Order), as amended by Order No. WQ 2008-0002-EXEC, contains requirements for operation and maintenance of sanitary sewer systems and for reporting and mitigating sanitary sewer overflows. While the Discharger must comply with both the General Order and this Order, the General Order more clearly and specifically stipulates requirements for operation and maintenance and for reporting and mitigating sanitary sewer overflows. The Discharger and other governmental agencies that are discharging wastewater into the facility are required to obtain enrollment for regulation under the General Order.

b. Biosolids Disposal Requirements

   (1) Collected screenings, sludge, and other solids removed from liquid wastes shall be disposed of in a manner that is consistent with State Water Resources Control Board and California Department of Resources Recycling and Recovery's joint regulations (Title 27) of the California Code of Regulations and approved by the Regional Water Board's Executive Officer.

   (2) The use and disposal of biosolids shall comply with existing Federal and State laws and regulations and local government ordinances, including conditions in 40 CFR 503, which include pollutant, pathogen reduction, and vector attraction reduction requirements for the use or disposal practice selected.

   (3) Any proposed change in biosolids use or disposal practice from a previously approved practice should be reported to the Executive Officer and EPA Regional Administrator at least 90 days in advance of the change. The Discharger must submit a detailed use or disposal plan to this Regional Water Board and EPA Regional Administrator for review and approval prior to changing the use or disposal practice.

   (4) The Discharger shall take all reasonable steps to minimize or prevent any discharge or biosolids use or disposal that has the potential of adversely affecting human health or the environment.

c. Pretreatment Program

(1) The Discharger shall update as necessary and implement an acceptable pretreatment program.

(2) The Discharger shall update as necessary the appropriate contractual agreements with all governmental agencies[8]. The contractual agreements shall give the Discharger the authority to implement and enforce the EPA approved pretreatment program within the sewer service areas of the treatment facility. The Discharger shall assure that any other steps necessary to provide this implementation and enforcement authority (e.g. adoption of ordinances, etc.) are taken by all governmental agencies. If a governmental agency has an EPA approved pretreatment program for any portion of the service area of the treatment facility, the Discharger's pretreatment program shall contain provisions ensuring that that governmental agency's program is implemented. In the event that any agency discharging to Discharger's facility fails to effectively implement its individual EPA approved pretreatment program, the Discharger shall implement and enforce its approved program within that agency's service area.

(3) The Discharger shall ensure that the POTW[9] pretreatment program for all contributory agencies discharging to the Discharger's treatment facility are implemented and enforced. The Discharger shall be responsible and liable for the performance of all Control Authority pretreatment requirements contained in 40 CFR 403, including any subsequent regulatory revisions to Part 403. Where Part 403 or subsequent revisions place mandatory actions upon the Discharger as Control Authority but does not specify a timetable for completion of the actions, the Discharger shall submit for approval of the Regional Water Board's Executive Officer, a schedule for implementation of the required actions and shall implement the approved schedule. The schedule for implementation shall be submitted within six months from the date that such mandatory actions are established. For violations of pretreatment requirements, the Discharger shall be subject to enforcement actions, penalties, fines and other remedies by the EPA, or other appropriate parties, as provided in the CWA, as amended (33 USC 1351 et seq.). The EPA or the Regional Water Board may also initiate enforcement action against an industrial user (IU) for non-compliance with applicable standards and requirements as provided in the CWA.

(4) The Discharger shall perform the pretreatment functions as required in 40 CFR Part 403 including, but not limited to:

(a) Enforce the pretreatment requirements under 40 CFR 403.5 and 403.6;

(b) Implement the necessary legal authorities as provided in 40 CFR 403.8(f)(1);

---

8 *Member agencies and sewering agencies discharging wastewater into the facility.*

9 *Publicly owned treatment works.*

(c) Implement the programmatic functions as provided in 40 CFR 403.8(f)(2);

(d) Publish a list of significant non-compliance as required by 40 CFR 403.8(f)(2)(vii); and

(e) Provide the requisite funding and personnel to implement the pretreatment program as provided in 40 CFR 403.8(f)(3).

(5) The following wastes shall not be introduced into the treatment works:

(a) Wastes which create a fire or explosion hazard in the treatment works;

(b) Wastes which will cause corrosive structural damage to treatment works, but, in no case, wastes with a pH lower than 5.0 unless the works are designed to accommodate such wastes;

(c) Wastes at a flow rate and/or pollutant discharge rate which is excessive over relatively short time periods so that there is a treatment process upset and subsequent loss of treatment efficiency;

(d) Solid or viscous wastes in amounts that would cause obstruction to the flow in sewers or otherwise interfere with the proper operation of the treatment works.

(6) The Discharger shall ensure compliance with any existing or future pretreatment standard promulgated by EPA under Section 307 of the CWA or amendments thereto for any discharge to the municipal system.

(7) The Discharger shall comply with effluent standards or prohibitions established under Section 307(a) of the CWA for toxic pollutants within the time provided in the regulations that establish these standards or prohibitions, even if this Order has not yet been modified to incorporate the requirement.

(8) The Discharger shall require each user not in compliance with any pretreatment standard to submit periodic notice (over intervals not to exceed nine months) of progress toward compliance with applicable toxic and pretreatment standards developed pursuant to the CWA or amendments thereto. The Discharger shall forward a copy of such notice to the Regional Water Board and to the EPA Regional Administrator.

6. Other Special Provisions

a. Compliance Schedules. Reports of compliance or non-compliance with, or any progress reports on, interim and final requirements contained in any compliance schedule of this Order shall be submitted no later than fourteen days following each schedule date.

7. Compliance Schedules – Not Applicable.

VII. COMPLIANCE DETERMINATION

Compliance with the effluent limitations contained in section IV of this Order will be determined as specified below:

A. General.

Compliance with effluent limitations for priority pollutants shall be determined using sample reporting protocols defined in the MRP and Attachment A of this Order. For purposes of reporting and administrative enforcement by the Regional and State Water Boards, the Discharger shall be deemed out of compliance with effluent limitations if the concentration of the priority pollutant in the monitoring sample is greater than the effluent limitation and greater than or equal to the reporting level (RL).

B. Multiple Sample Data.

When determining compliance with an AMEL or MDEL for priority pollutants and more than one sample result is available, the Discharger shall compute the arithmetic mean unless the data set contains one or more reported determinations of "Detected, but Not Quantified" (DNQ) or "Not Detected" (ND). In those cases, the Discharger shall compute the median in place of the arithmetic mean in accordance with the following procedure:

1. The data set shall be ranked from low to high, ranking the reported ND determinations lowest, DNQ determinations next, followed by quantified values (if any). The order of the individual ND or DNQ determinations is unimportant.

2. The median value of the data set shall be determined. If the data set has an odd number of data points, then the median is the middle value. If the data set has an even number of data points, then the median is the average of the two values around the middle unless one or both of the points are ND or DNQ, in which case the median value shall be the lower of the two data points where DNQ is lower than a value and ND is lower than DNQ.

C. Average Monthly Effluent Limitation (AMEL).

If the average (or when applicable, the median determined by subsection B above for multiple sample data) of daily discharges over a calendar month exceeds the AMEL for a given parameter, this will represent a single violation, though the Discharger will be considered out of compliance for each day of that month for that parameter (e.g., resulting in 31 days of non-compliance in a 31-day month). If only a single sample is taken during the calendar month and the analytical result for that sample exceeds the AMEL, the Discharger will be considered out of compliance for that calendar month. The Discharger will only be considered out of compliance for days when the discharge

occurs. For any one calendar month during which no sample (daily discharge) is taken, no compliance determination can be made for that calendar month.

D. Average Weekly Effluent Limitation (AWEL).

If the average or when applicable, the median determined by subsection B above for multiple sample data of daily discharges over a calendar week exceeds the AWEL for a given parameter, this will represent a single violation, though the Discharger will be considered out of compliance for each day of that week for that parameter, resulting in 7 days of non-compliance. If only a single sample is taken during the calendar week and the analytical result for that sample exceeds the AWEL, the Discharger will be considered out of compliance for that calendar week. The Discharger will only be considered out of compliance for days when the discharge occurs. For any one calendar week during which no sample (daily discharge) is taken, no compliance determination can be made for that calendar week.

E. Maximum Daily Effluent Limitation (MDEL).

If a daily discharge or when applicable, the median determined by subsection B above for multiple sample data of a daily discharge exceeds the MDEL for a given parameter, the Discharger will be considered out of compliance for that parameter for that 1 day only within the reporting period. For any 1 day during which no sample is taken, no compliance determination can be made for that day.

F. Instantaneous Minimum Effluent Limitation.

If the analytical result of a single grab sample is lower than the instantaneous minimum effluent limitation for a parameter, the Discharger will be considered out of compliance for that parameter for that single sample. Non-compliance for each sample will be considered separately (e.g., the results of two grab samples taken within a calendar day that both are lower than the instantaneous minimum effluent limitation would result in two instances of non-compliance with the instantaneous minimum effluent limitation).

G. Instantaneous Maximum Effluent Limitation.

If the analytical result of a single grab sample is higher than the instantaneous maximum effluent limitation for a parameter, the Discharger will be considered out of compliance for that parameter for that single sample. Non-compliance for each sample will be considered separately (e.g., the results of two grab samples taken within a calendar day that both exceed the instantaneous maximum effluent limitation would result in two instances of non-compliance with the instantaneous maximum effluent limitation).

H. 12-Month Running Average Effluent Limitation (12-MRAEL).
Compliance with the 12-month running average limits under Discharge Specification IV.A.1.c., and IV.C.1.b. shall be determined by the arithmetic mean of the last twelve monthly averages.

I. Total Chlorine Residual Limitation (TCR).
Compliance determinations for total chlorine residual shall be determined at the boundary of the zone of initial dilution approved by the Regional Board Executive Office, except for Syphon Reservoir, which is determined at the discharge point.

J. Turbidity Limitations.
The Discharger shall be considered in compliance with Discharge Specifications IV.A.1.d.(1) and IV.C.1.c.(1) if the following conditions are met. If the Discharger is using a properly operating backup turbidimeter, the reading of the backup turbidimeter shall be considered in determining whether there has been an actual noncompliance:

1. There are no excursions above the limits specified in Discharge Specifications IV.A.1.d.(1).(a) and (b) and IV.C.1.c.(1).(a) and (b);
2. Exceedances of the "10 NTU at any time" turbidity requirement do not exceed a duration of one minute.
3. The apparent exceedance was caused by interference with, or malfunction of, the monitoring instrument.

K. Coliform Organism Effluent Limitations.

1. Compliance with the average weekly total coliform limit expressed in Discharge Specification IV.A.1.d.(2)(c), IV.C.1.c.(2)(a), and IV.C.1.d. shall be based on a median of test results from the previous 7 days. To comply with the limit, the 7-day median MPN must not exceed 2.2 per 100 milliliters on any day during the week. However, only one violation is recorded for each calendar week, even if the 7-day median MPN value is greater than 2.2 for more than one day in the week.

2. Compliance with the average weekly total coliform limit expressed in Discharge Specification IV.C.1.e. shall be based on a median of test results from the previous 7 days. To comply with the limit, the 7-day median MPN must not exceed 23 per 100 milliliters on any day during the week. However, only one violation is recorded for each calendar week, even if the 7-day median MPN value is greater than 23 for more than one day in the week.

L. pH Effluent Limitations.
Pursuant to 40 CFR 401.17, the Discharger shall be in compliance with the pH limitations specified in the Discharge Specification IV.A.1.a, above, provided that both of the following conditions are satisfied:

1. The total time during which the pH values are outside the required range of 6.5-8.5 pH values shall not exceed 7 hours and 26 minutes in any calendar month; and
2. No individual excursion from the range of pH values shall exceed 60 minutes.

M. Priority Pollutants.

The Discharger shall be deemed out of compliance with an effluent limitation if the concentration of the priority pollutant in the monitoring sample is greater than the effluent limitation.

1. Compliance determination shall be based on the reporting level selected from minimum level (ML)[10] specified in Attachment "I" of this Order, unless an alternative reporting level is approved by the Regional Water Board's Executive Officer. When there is more than one ML value for a given substance, the Discharger shall select the ML value that is below the calculated effluent limitation, and use its associated analytical method, listed in Attachment "I" of this Order. If no ML value is below the effluent limitation, then the Regional Water Board will select as the reporting level the lowest ML value and its associated analytical method.

2. When determining compliance with an average monthly limit and more than one sample result is available in a month, the Discharger shall compute the arithmetic mean unless the data set contains one or more reported determinations of detected but not quantified (DNQ) or not detected (ND). In those cases, the Discharger shall compute the median in place of the arithmetic mean in accordance with the following procedure:

   a. The data set shall be ranked from low to high, reported ND determinations lowest, DNQ determinations next, followed by quantified values (if any). The order of the individual ND or DNQ determinations is unimportant.

   b. The median value of the data set shall be determined. If the data set has an odd number of data points, then the median is the middle value. If the data set has an even number of data points, then the median is the average of the two values around the middle unless one or both of the points are ND or DNQ, in which case the median value shall be the lower of the two data points where DNQ is lower than a value and ND is lower than DNQ. If a sample result, or the arithmetic mean or median of multiple sample results, is below the reporting level, and there is evidence that the priority pollutant is present in the effluent above an effluent limitation and the Discharger conducts a pollutant minimization program (PMP), the Discharger shall not be deemed out of compliance.

N. Compliance Determination.

Compliance determinations shall be based on available analyses for the time interval associated with the effluent limitation. Where only one sample analysis is available in a specified time interval (e. g., monthly or weekly average), that sample shall serve to characterize the discharge for the entire interval. If quarterly sample results show noncompliance with the average monthly limit and that sample result is used for compliance determinations for each month of the quarter, then three separate violations of the average monthly limit shall be deemed to have occurred.

---

[10] *Minimum /eve/ is the concentration at which the entire analytical system must give a recognizable signal and acceptable point. The ML is the concentration in a sample that is equivalent to the concentration of the lowest calibration standard analyzed by a specific analytical procedure, assuming that all the method specified sample weights, volumes, and processing steps have been followed.*

Compliance with a single effluent limitation which applies to a group of chemicals (e.g., PCBs), based on a single sample shall be determined by considering the concentrations of individual members of the group to be zero if the analytical response for the individual chemical falls below the method detection limit (MDL) for that chemical.

ATTACHMENT A – DEFINITIONS

Arithmetic Mean (μ), also called the average, is the sum of measured values divided by the number of samples. For ambient water concentrations, the arithmetic mean is calculated as follows:

Arithmetic mean = $\mu = \Sigma x / n$ where: Σx is the sum of the measured ambient water concentrations, and n is the number of samples.

Average Monthly Effluent Limitation (AMEL): the highest allowable average of daily discharges over a calendar month, calculated as the sum of all daily discharges measured during a calendar month divided by the number of daily discharges measured during that month.

Average Weekly Effluent Limitation (AWEL): the highest allowable average of daily discharges over a calendar week (Sunday through Saturday), calculated as the sum of all daily discharges measured during a calendar week divided by the number of daily discharges measured during that week.

Best Management Practices (BMPs) are methods, measures, or practices designed and selected to reduce or eliminate the discharge of pollutants to surface waters from point and nonpoint source discharges including storm water. BMPs include structural and non-structural controls, and operation and maintenance procedures, which can be applied before, during, and/or after pollution producing activities.

Bioaccumulative pollutants are those substances taken up by an organism from its surrounding medium through gill membranes, epithelial tissue, or from food and subsequently concentrated and retained in the body of the organism.

Carcinogenic pollutants are substances that are known to cause cancer in living organisms.

Coefficient of Variation (CV) is a measure of the data variability and is calculated as the estimated standard deviation divided by the arithmetic mean of the observed values.

Criteria Continuous Concentration (CCC) equals the highest concentration of a pollutant to which aquatic life can be exposed for an extended period of time (4 days) without deleterious effects.

Criteria Maximum Concentration (CMC) equals the highest concentration of a pollutant to which aquatic life can be exposed for a short period of time without deleterious effects.

Daily Discharge: Daily Discharge is defined as either: (1) the total mass of the constituent discharged over the calendar day (12:00 am through 11:59 pm) or any 24-hour period that reasonably represents a calendar day for purposes of sampling (as specified in the permit), for a constituent with limitations expressed in units of mass or; (2) the unweighted arithmetic mean measurement of the constituent over the day for a constituent with limitations expressed in other units of measurement (e.g., concentration).

The daily discharge may be determined by the analytical results of a composite sample taken over the course of one day (a calendar day or other 24-hour period defined as a day) or by the arithmetic mean of analytical results from one or more grab samples taken over the course of the day.

For composite sampling, if 1 day is defined as a 24-hour period other than a calendar day, the analytical result for the 24-hour period will be considered as the result for the calendar day in which the 24-hour period ends.

Detected, but Not Quantified (DNQ) are those sample results less than the RL, but greater than or equal to the laboratory's MDL.

Dilution Credit is the amount of dilution granted to a discharge in the calculation of a water quality-based effluent limitation, based on the allowance of a specified mixing zone. It is calculated from the dilution ratio or determined through conducting a mixing zone study or modeling of the discharge and receiving water.

Dilution Ratio is the critical low flow of the upstream receiving water divided by the flow of the effluent discharged.

Effluent Concentration Allowance (ECA) is a value derived from the water quality criterion/objective, dilution credit, and ambient background concentration that is used, in conjunction with the coefficient of variation for the effluent monitoring data, to calculate a long-term average (LTA) discharge concentration. The ECA has the same meaning as waste load allocation (WLA) as used in USEPA guidance (Technical Support Document For Water Quality-based Toxics Control, March 1991, second printing, EPA/505/2-90-001).

Enclosed Bays means indentations along the coast that enclose an area of oceanic water within distinct headlands or harbor works. Enclosed bays include all bays where the narrowest distance between the headlands or outermost harbor works is less than 75 percent of the greatest dimension of the enclosed portion of the bay. Enclosed bays include, but are not limited to, Humboldt Bay, Bodega Harbor, Tomales Bay, Drake's Estero, San Francisco Bay, Morro Bay, Los Angeles-Long Beach Harbor, Upper and Lower Newport Bay, Mission Bay, and San Diego Bay. Enclosed bays do not include inland surface waters or ocean waters.

Estimated Chemical Concentration is the estimated chemical concentration that results from the confirmed detection of the substance by the analytical method below the ML value.

Estuaries means waters, including coastal lagoons, located at the mouths of streams that serve as areas of mixing for fresh and ocean waters. Coastal lagoons and mouths of streams that are temporarily separated from the ocean by sandbars shall be considered estuaries. Estuarine waters shall be considered to extend from a bay or the open ocean to a point upstream where there is no significant mixing of fresh water and seawater. Estuarine waters included, but are not limited to, the Sacramento-San Joaquin Delta, as defined in Water Code section 12220, Suisun Bay, Carquinez Strait downstream to the Carquinez Bridge, and appropriate areas of the Smith, Mad, Eel, Noyo, Russian, Klamath, San Diego, and Otay rivers. Estuaries do not include inland surface waters or ocean waters.

Existing Discharger means any discharger that is not a new discharger. An existing discharger includes an "increasing discharger" (i.e., an existing facility with treatment systems in place for its current discharge that is or will be expanding, upgrading, or modifying its existing permitted discharge after the effective date of this Policy).

Infeasible means not capable of being accomplished in a successful manner within a reasonable period of time, taking into account economic, environmental, legal, social, and technological factors.

Inland Surface Waters are all surface waters of the State that do not include the ocean, enclosed bays, or estuaries.

Instantaneous Maximum Effluent Limitation: the highest allowable value for any single grab sample or aliquot (i.e., each grab sample or aliquot is independently compared to the instantaneous maximum limitation).

Instantaneous Minimum Effluent Limitation: the lowest allowable value for any single grab sample or aliquot (i.e., each grab sample or aliquot is independently compared to the instantaneous minimum limitation).

Load Allocation (LA) is the portion of receiving water's total maximum daily load that is allocated to one of its nonpoint sources of pollution or to natural background sources.

Maximum Daily Effluent Limitation (MDEL) means the highest allowable daily discharge of a pollutant, over a calendar day (or 24-hour period). For pollutants with limitations expressed in units of mass, the daily discharge is calculated as the total mass of the pollutant discharged over the day. For pollutants with limitations expressed in other units of measurement, the daily discharge is calculated as the arithmetic mean measurement of the pollutant over the day.

Maximum Daily Flow is the maximum flow sample of all samples collected in a calendar day.

MEC: Maximum Effluent Concentration.

Median is the middle measurement in a set of data. The median of a set of data is found by first arranging the measurements in order of magnitude (either increasing or decreasing order). If the number of measurements (n) is odd, then the median = $X_{(n+1)/2}$. If n is even, then the median = $(X_{n/2} + X_{(n/2)+1})/2$ (i.e., the midpoint between the $n/2$ and $n/2+1$).

Method Detection Limit (MDL) is the minimum concentration of a substance that can be measured and reported with 99 percent confidence that the analyte concentration is greater than zero, as defined in title 40 of the Code of Federal Regulations, Part 136, Attachment B, revised as of July 3, 1999.

Minimum Level (ML) is the concentration at which the entire analytical system must give a recognizable signal and acceptable calibration point. The ML is the concentration in a sample that is equivalent to the concentration of the lowest calibration standard analyzed by a specific analytical procedure, assuming that all the method specified sample weights, volumes, and processing steps have been followed.

Mixing Zone is a limited volume of receiving water that is allocated for mixing with a wastewater discharge where water quality criteria can be exceeded without causing adverse effects to the overall water body.

New Discharger includes any building, structure, facility, or installation from which there is, or may be, a discharge of pollutants, the construction of which commenced after the effective date of this Policy.

Not Detected (ND) are those sample results less than the laboratory's MDL.

Ocean Waters are the territorial marine waters of the State as defined by California law to the extent these waters are outside of enclosed bays, estuaries, and coastal lagoons. Discharges to ocean waters are regulated in accordance with the State Water Board's California Ocean Plan.

Objectionable Bottom Deposits are an accumulation of materials or substances on or near the bottom of a water body, which creates conditions that adversely impact aquatic life, human health, beneficial uses, or aesthetics. These conditions include, but are not limited to, the accumulation of pollutants in the sediments and other conditions that result in harm to benthic organisms, production of food chain organisms, or fish egg development. The presence of such deposits shall be determined by RWQCB(s) on a case-by-case basis.

Persistent pollutants are substances for which degradation or decomposition in the environment is nonexistent or very slow.

Pollutant Minimization Program (PMP) means waste minimization and pollution prevention actions that include, but are not limited to, product substitution, waste stream recycling, alternative waste management methods, and education of the public and businesses. The goal of the PMP shall be to reduce all potential sources of a priority pollutant(s) through pollutant minimization (control) strategies, including pollution prevention measures as appropriate, to maintain the effluent concentration at or below the water quality-based effluent limitation. Pollution prevention measures may be particularly appropriate for persistent bioaccumulative priority pollutants where there is evidence that beneficial uses are being impacted. The Regional Water Board may consider cost effectiveness when establishing the requirements of a PMP. The completion and implementation of a Pollution Prevention Plan, if required pursuant to Water Code section 13263.3(d), shall be considered to fulfill the PMP requirements.

Pollution Prevention means any action that causes a net reduction in the use or generation of a hazardous substance or other pollutant that is discharged into water and includes, but is not limited to, input change, operational improvement, production process change, and product reformulation (as defined in Water Code section 13263.3). Pollution prevention does not include actions that merely shift a pollutant in wastewater from one environmental medium to another environmental medium, unless clear environmental benefits of such an approach are identified to the satisfaction of the State or Regional Water Board.

Reporting Level (RL) is the ML (and its associated analytical method) chosen by the Discharger for reporting and compliance determination from the MLs included in this Order. The MLs included in this Order correspond to approved analytical methods for reporting a sample result that are selected by the Regional Water Board either from Appendix 4 of the SIP in accordance with section 2.4.2 of the SIP or established in accordance with section 2.4.3 of the SIP. The ML is based on the proper application of method-based analytical procedures for sample preparation and the absence of any matrix interferences. Other factors may be applied to the ML depending on the specific sample preparation steps employed. For example, the treatment typically applied in cases where there are matrix-effects is to dilute the sample or sample aliquot by a factor of ten. In such cases, this additional factor must be applied to the ML in the computation of the RL.

Satellite Collection System is the portion, if any, of a sanitary sewer system owned or operated by a different public agency than the agency that owns and operates the wastewater treatment facility that a sanitary sewer system is tributary to.

Source of Drinking Water is any water designated as municipal or domestic supply (MUN) in a Regional Water Board Basin Plan.

Standard Deviation (σ) is a measure of variability that is calculated as follows:

$$\sigma = (\Sigma[(x - \mu)^2]/(n - 1))^{0.5}$$

where:

x is the observed value;

μ is the arithmetic mean of the observed values; and

n is the number of samples.

Toxicity Reduction Evaluation (TRE) is a study conducted in a step-wise process designed to identify the causative agents of effluent or ambient toxicity, isolate the sources of toxicity, evaluate the effectiveness of toxicity control options, and then confirm the reduction in toxicity. The first steps of the TRE consist of the collection of data relevant to the toxicity, including additional toxicity testing, and an evaluation of facility operations and maintenance practices, and best management practices. A Toxicity Identification Evaluation (TIE) may be required as part of the TRE, if appropriate. (A TIE is a set of procedures to identify the specific chemical(s) responsible for toxicity. These procedures are performed in three phases (characterization, identification, and confirmation) using aquatic organism toxicity tests.)

Use Attainability Analysis is a structured scientific assessment of the factors affecting the attainment of the use which may include physical, chemical, biological and economic factors as described in 40 CFR 131.10(g) (40 CFR 131.3, revised as of July 1, 1997).

Water Effect Ratio (WER) is an appropriate measure of the toxicity of a material obtained in a site water divided by the same measure of the toxicity of the same material obtained simultaneously in a laboratory dilution water.

12-Month Running Average Effluent Limitation (12-MRAEL): the highest allowable average of monthly discharges over last twelve months, calculated as the sum of all monthly discharges measured during last twelve months divided by the number of monthly discharges measured during that time period.

ATTACHMENT B – LOCATION MAPS AND FACILITY LAYOUT

Michelson Water Recycling Plant and Reservoirs Location Map

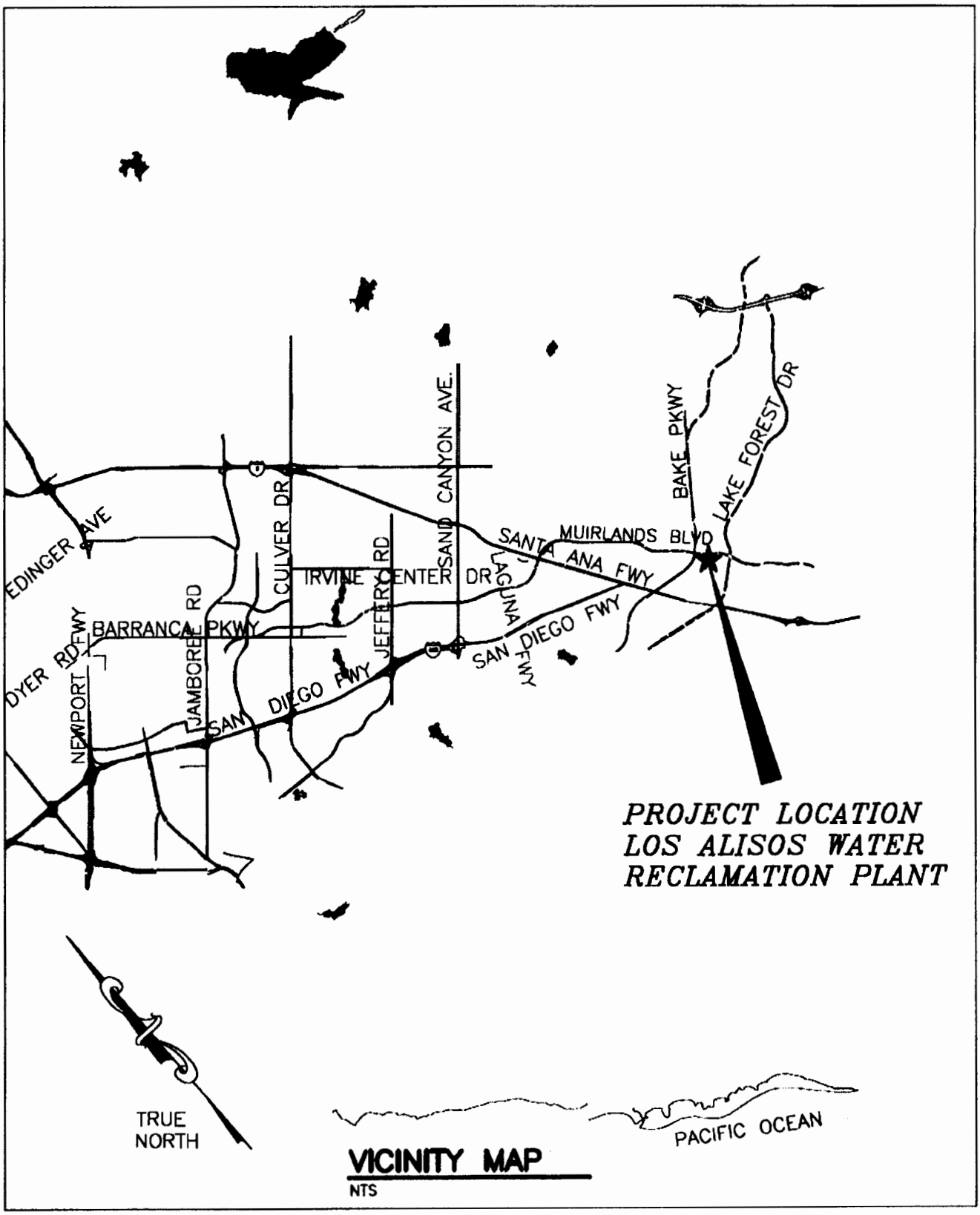

Los Alisos Water Recycling Plant Vicinity Map

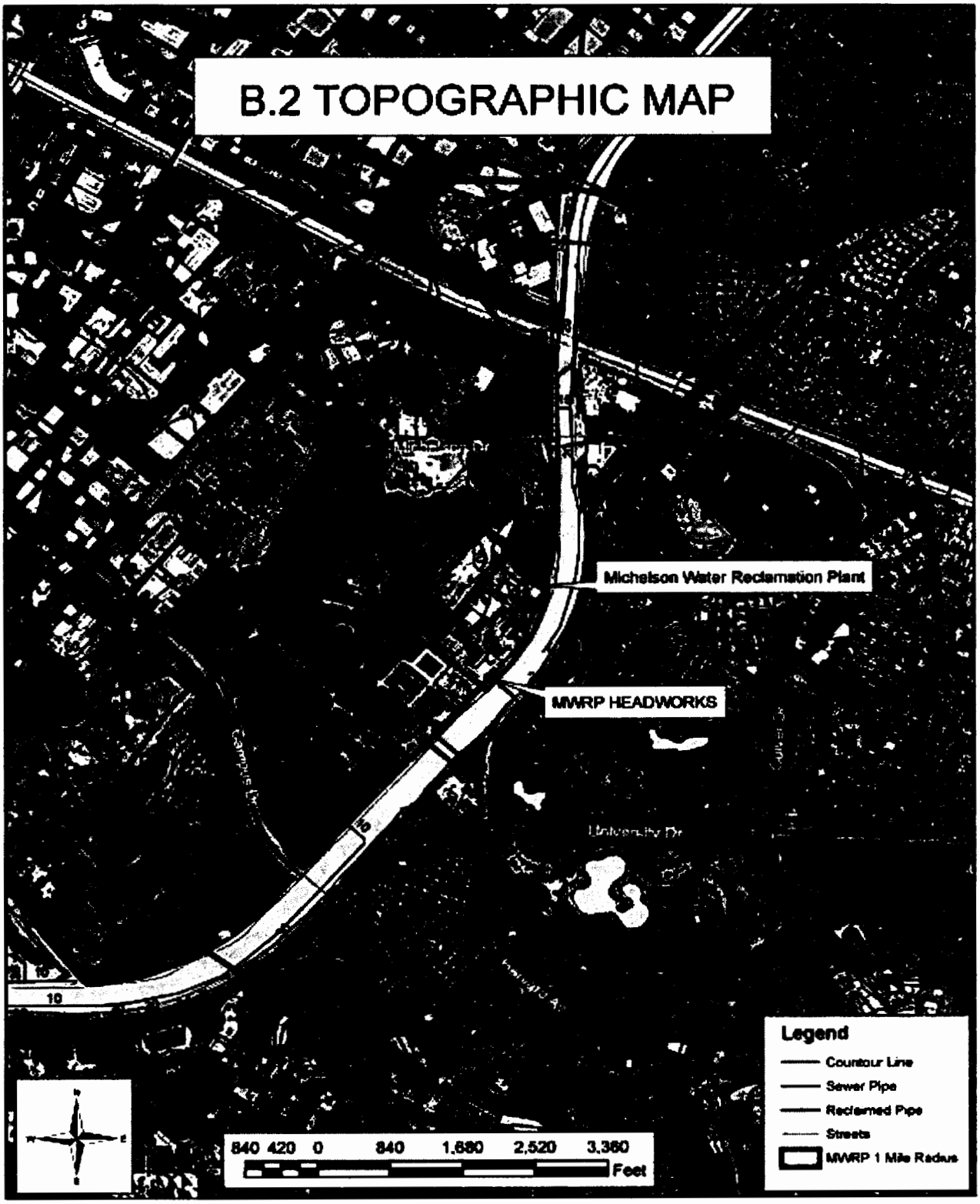

Michelson Water Recycling Plant Topographic Map

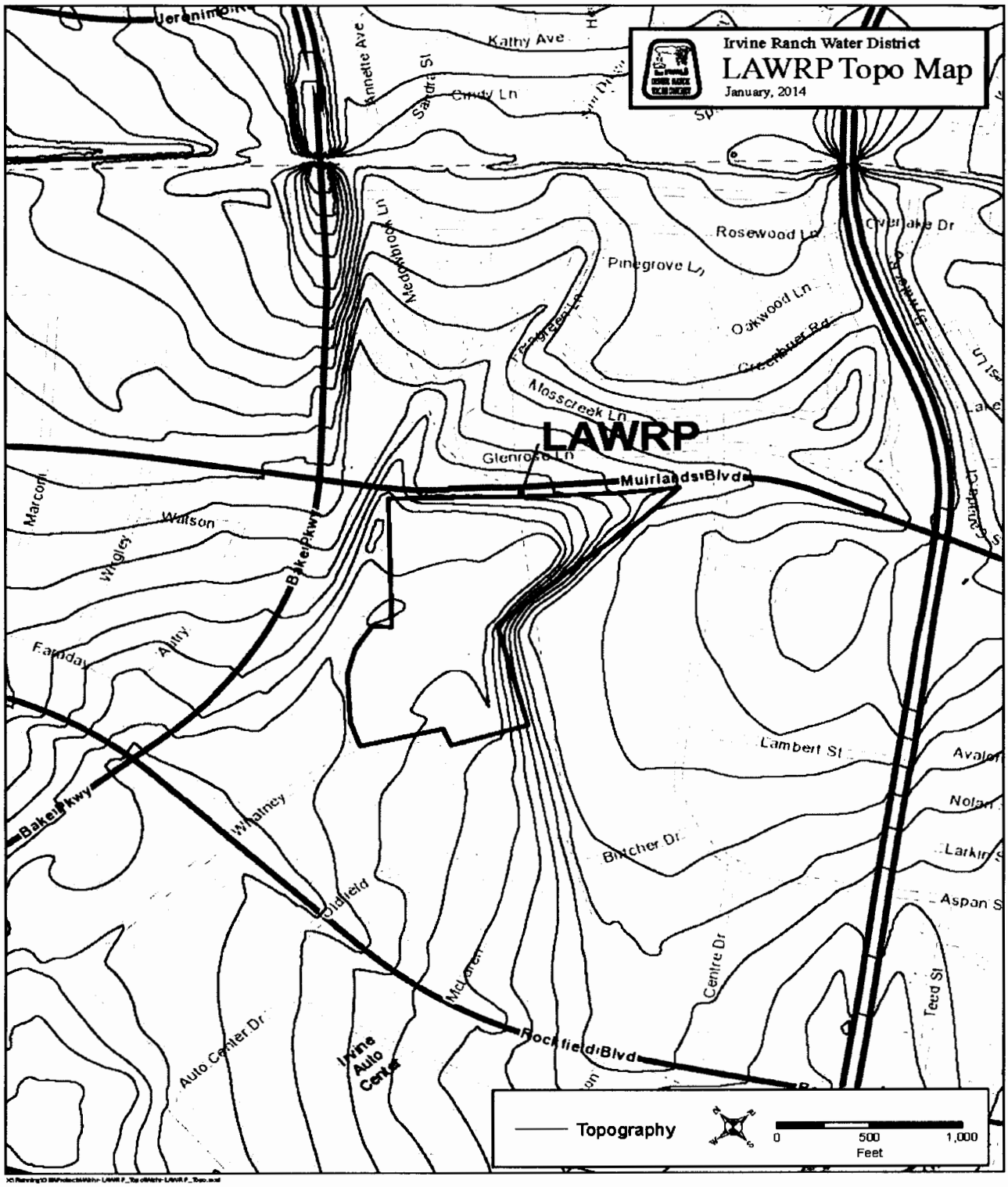

Los Alisos Water Recycling Plant Topographic Map

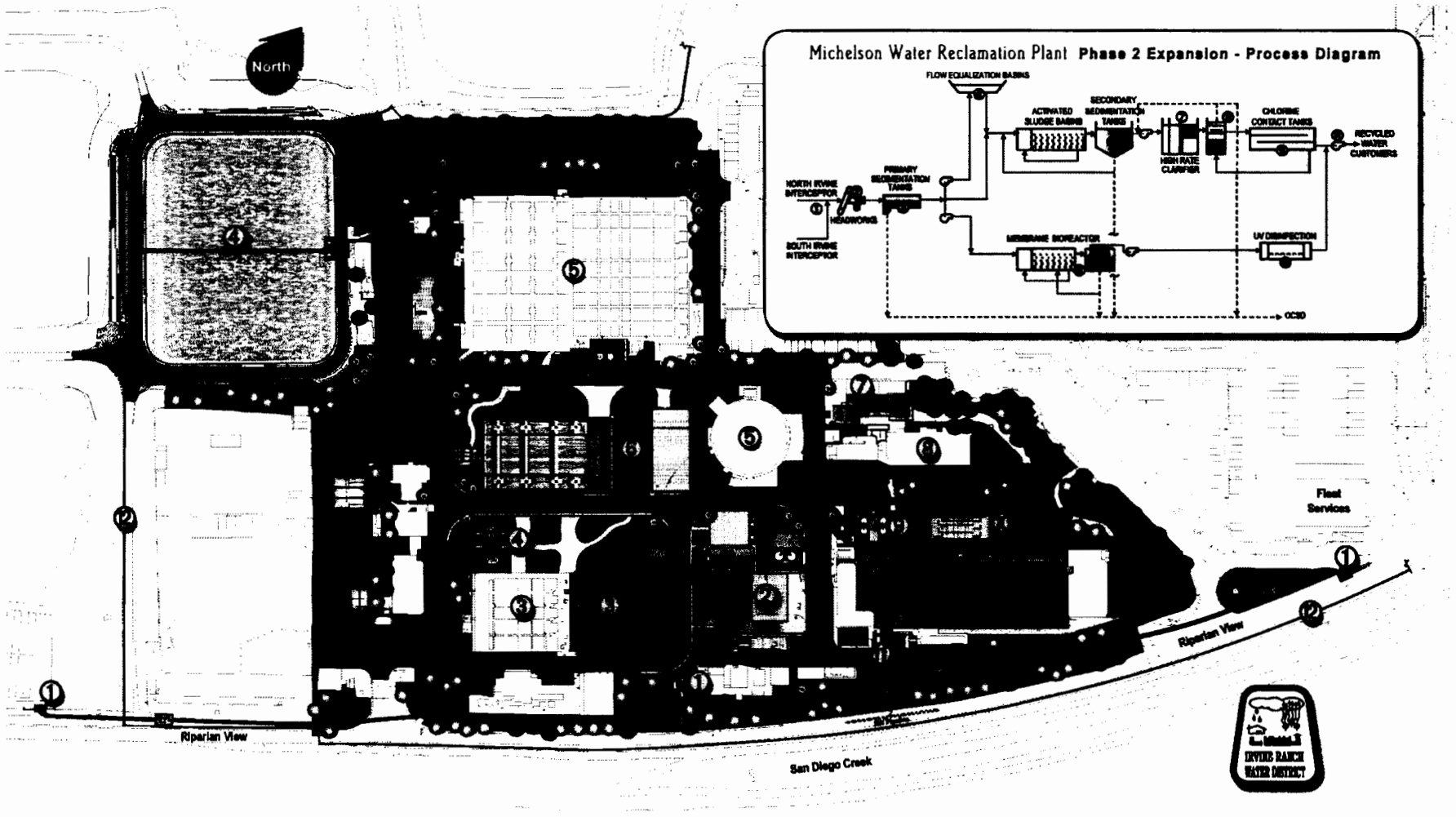

Michelson Water Recycling Plant Facility Layout

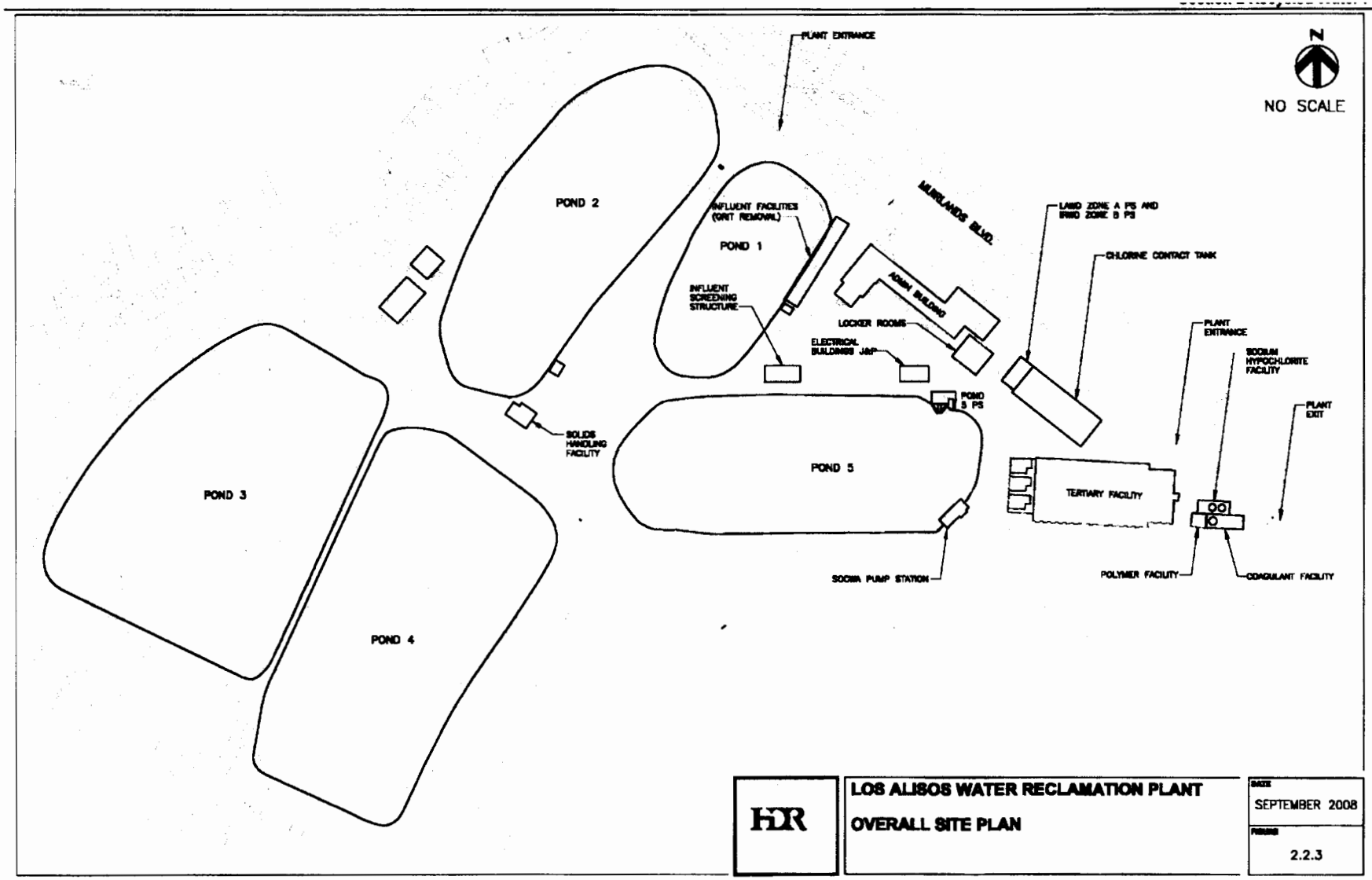

Los Alisos Water Recycling Plant Facility Layout

ATTACHMENT C – FLOW SCHEMATIC

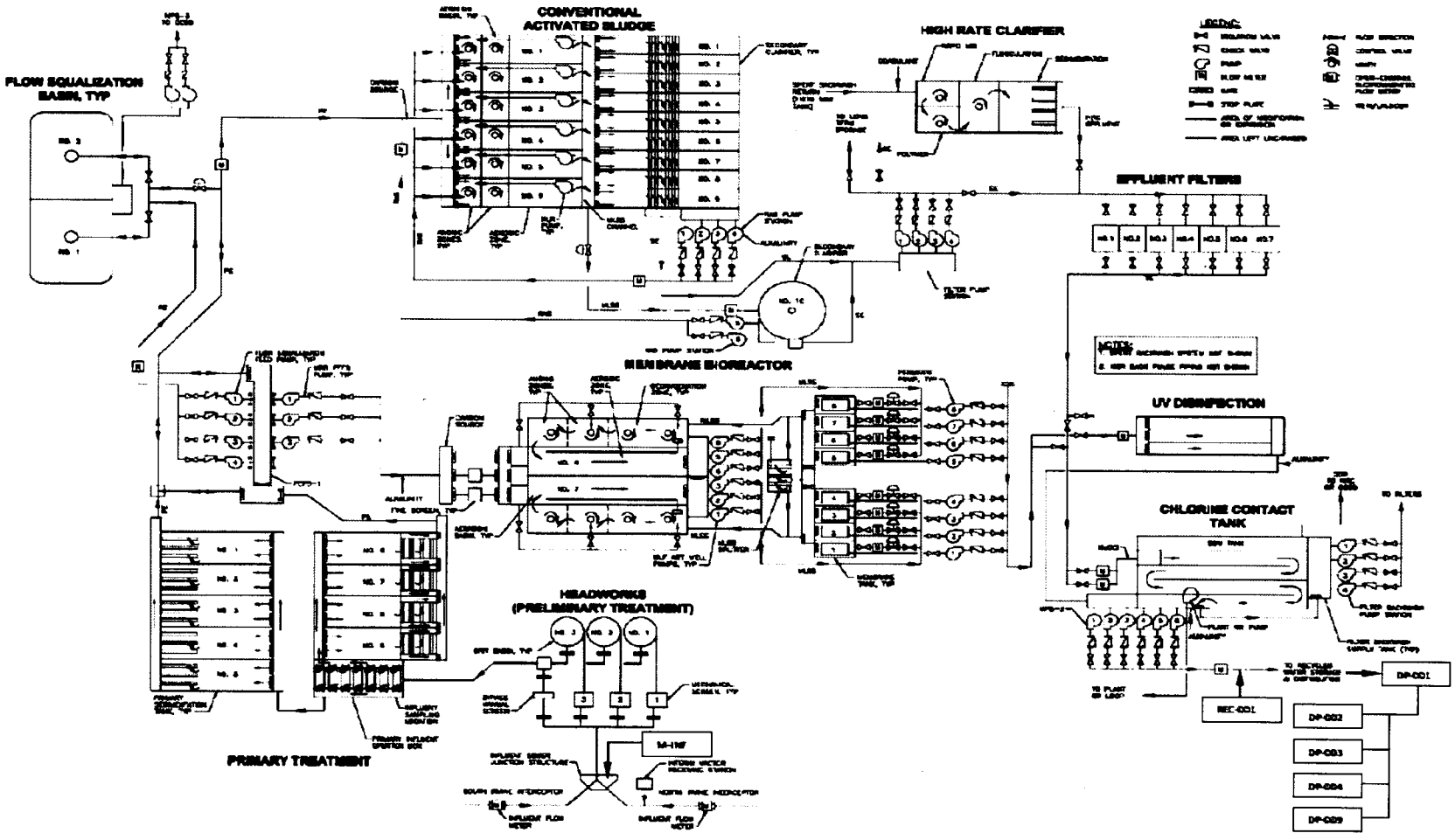

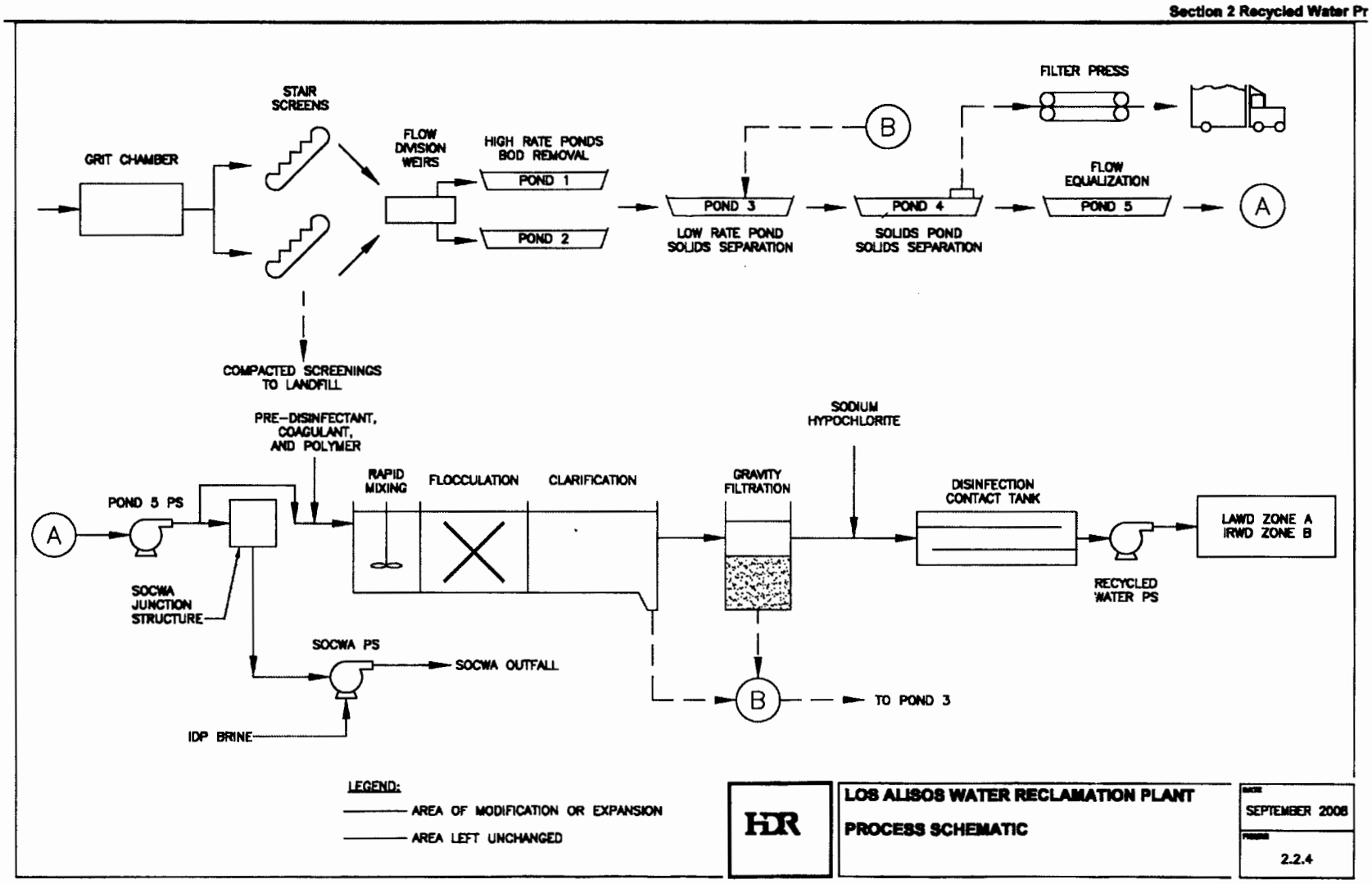

Los Alisos Water Recycling Plant Flow Schematic

ATTACHMENT D –FEDERAL STANDARD PROVISIONS

I. STANDARD PROVISIONS – PERMIT COMPLIANCE

A. Duty to Comply

1. The Discharger must comply with all of the conditions of this Order. Any noncompliance constitutes a violation of the Clean Water Act (CWA) and the California Water Code and is grounds for enforcement action, for permit termination, revocation and reissuance, or modification; or denial of a permit renewal application. (40 C.F.R. § 122.41(a).)

2. The Discharger shall comply with effluent standards or prohibitions established under Section 307(a) of the CWA for toxic pollutants and with standards for sewage sludge use or disposal established under Section 405(d) of the CWA within the time provided in the regulations that establish these standards or prohibitions, even if this Order has not yet been modified to incorporate the requirement. (40 C.F.R. § 122.41(a)(1).)

B. Need to Halt or Reduce Activity Not a Defense

It shall not be a defense for a Discharger in an enforcement action that it would have been necessary to halt or reduce the permitted activity in order to maintain compliance with the conditions of this Order. (40 C.F.R. § 122.41(c).)

C. Duty to Mitigate

The Discharger shall take all reasonable steps to minimize or prevent any discharge or sludge use or disposal in violation of this Order that has a reasonable likelihood of adversely affecting human health or the environment. (40 C.F.R. § 122.41(d).)

D. Proper Operation and Maintenance

The Discharger shall at all times properly operate and maintain all facilities and systems of treatment and control (and related appurtenances) which are installed or used by the Discharger to achieve compliance with the conditions of this Order. Proper operation and maintenance also includes adequate laboratory controls and appropriate quality assurance procedures. This provision requires the operation of backup or auxiliary facilities or similar systems that are installed by a Discharger only when necessary to achieve compliance with the conditions of this Order. (40 C.F.R. § 122.41(e).)

E. Property Rights

1. This Order does not convey any property rights of any sort or any exclusive privileges. (40 C.F.R. § 122.41(g).)

2. The issuance of this Order does not authorize any injury to persons or property or invasion of other private rights, or any infringement of state or local law or regulations. (40 C.F.R. § 122.5(c).)

F. Inspection and Entry

The Discharger shall allow the Regional Water Board, State Water Board, United States Environmental Protection Agency (USEPA), and/or their authorized representatives (including an authorized contractor acting as their representative), upon the presentation of credentials and other documents, as may be required by law, to (40 C.F.R. § 122.41(i); Wat. Code, § 13383):

1. Enter upon the Discharger's premises where a regulated facility or activity is located or conducted, or where records are kept under the conditions of this Order (40 C.F.R. § 122.41(i)(1));

2. Have access to and copy, at reasonable times, any records that must be kept under the conditions of this Order (40 C.F.R. § 122.41(i)(2));

3. Inspect and photograph, at reasonable times, any facilities, equipment (including monitoring and control equipment), practices, or operations regulated or required under this Order (40 C.F.R. § 122.41(i)(3)); and

4. Sample or monitor, at reasonable times, for the purposes of assuring Order compliance or as otherwise authorized by the CWA or the Water Code, any substances or parameters at any location. (40 C.F.R. § 122.41(i)(4).)

G. Bypass

1. Definitions

   a. "Bypass" means the intentional diversion of waste streams from any portion of a treatment facility. (40 C.F.R. § 122.41(m)(1)(i).)

   b. "Severe property damage" means substantial physical damage to property, damage to the treatment facilities, which causes them to become inoperable, or substantial and permanent loss of natural resources that can reasonably be expected to occur in the absence of a bypass. Severe property damage does not mean economic loss caused by delays in production. (40 C.F.R. § 122.41(m)(1)(ii).)

2. Bypass not exceeding limitations. The Discharger may allow any bypass to occur which does not cause exceedances of effluent limitations, but only if it is for essential maintenance to assure efficient operation. These bypasses are not subject to the provisions listed in Standard Provisions – Permit Compliance I.G.3, I.G.4, and I.G.5 below. (40 C.F.R. § 122.41(m)(2).)

3. Prohibition of bypass. Bypass is prohibited, and the Regional Water Board may take enforcement action against a Discharger for bypass, unless (40 C.F.R. § 122.41(m)(4)(i)):

   a. Bypass was unavoidable to prevent loss of life, personal injury, or severe property damage (40 C.F.R. § 122.41(m)(4)(i)(A));

   b. There were no feasible alternatives to the bypass, such as the use of auxiliary treatment facilities, retention of untreated wastes, or maintenance during normal periods of equipment downtime. This condition is not satisfied if adequate back-up equipment should have been installed in the exercise of reasonable engineering judgment to prevent a bypass that occurred during normal periods of equipment downtime or preventive maintenance (40 C.F.R. § 122.41(m)(4)(i)(B)); and

   c. The Discharger submitted notice to the Regional Water Board as required under Standard Provisions – Permit Compliance I.G.5 below. (40 C.F.R. § 122.41(m)(4)(i)(C).)

4. The Regional Water Board may approve an anticipated bypass, after considering its adverse effects, if the Regional Water Board determines that it will meet the three conditions listed in Standard Provisions – Permit Compliance I.G.3 above. (40 C.F.R. § 122.41(m)(4)(ii).)

5. Notice

   a. Anticipated bypass. If the Discharger knows in advance of the need for a bypass, it shall submit a notice, if possible at least 10 days before the date of the bypass. (40 C.F.R. § 122.41(m)(3)(i).)

   b. Unanticipated bypass. The Discharger shall submit notice of an unanticipated bypass as required in Standard Provisions - Reporting V.E below (24-hour notice). (40 C.F.R. § 122.41(m)(3)(ii).)

H. Upset

Upset means an exceptional incident in which there is unintentional and temporary noncompliance with technology based permit effluent limitations because of factors beyond the reasonable control of the Discharger. An upset does not include noncompliance to the extent caused by operational error, improperly designed treatment facilities, inadequate treatment facilities, lack of preventive maintenance, or careless or improper operation. (40 C.F.R. § 122.41(n)(1).)

1. Effect of an upset. An upset constitutes an affirmative defense to an action brought for noncompliance with such technology based permit effluent limitations if the requirements of Standard Provisions – Permit Compliance I.H.2 below are met. No determination made during administrative review of claims that noncompliance was

caused by upset, and before an action for noncompliance, is final administrative action subject to judicial review. (40 C.F.R. § 122.41(n)(2).).

2. Conditions necessary for a demonstration of upset. A Discharger who wishes to establish the affirmative defense of upset shall demonstrate, through properly signed, contemporaneous operating logs or other relevant evidence that (40 C.F.R. § 122.41(n)(3)):

   a. An upset occurred and that the Discharger can identify the cause(s) of the upset (40 C.F.R. § 122.41(n)(3)(i));

   b. The permitted facility was, at the time, being properly operated (40 C.F.R. § 122.41(n)(3)(ii));

   c. The Discharger submitted notice of the upset as required in Standard Provisions – Reporting V.E.2.b below (24-hour notice) (40 C.F.R. § 122.41(n)(3)(iii)); and

   d. The Discharger complied with any remedial measures required under Standard Provisions – Permit Compliance I.C above. (40 C.F.R. § 122.41(n)(3)(iv).)

3. Burden of proof. In any enforcement proceeding, the Discharger seeking to establish the occurrence of an upset has the burden of proof. (40 C.F.R. § 122.41(n)(4).)

II. STANDARD PROVISIONS – PERMIT ACTION

A. General

This Order may be modified, revoked and reissued, or terminated for cause. The filing of a request by the Discharger for modification, revocation and reissuance, or termination, or a notification of planned changes or anticipated noncompliance does not stay any Order condition. (40 C.F.R. § 122.41(f).)

B. Duty to Reapply

If the Discharger wishes to continue an activity regulated by this Order after the expiration date of this Order, the Discharger must apply for and obtain a new permit. (40 C.F.R. § 122.41(b).)

C. Transfers

This Order is not transferable to any person except after notice to the Regional Water Board. The Regional Water Board may require modification or revocation and reissuance of the Order to change the name of the Discharger and incorporate such other requirements as may be necessary under the CWA and the Water Code. (40 C.F.R. § 122.41(l)(3); § 122.61.)

III. STANDARD PROVISIONS – MONITORING

A. Samples and measurements taken for the purpose of monitoring shall be representative of the monitored activity. (40 C.F.R. § 122.41(j)(1).)

B. Monitoring results must be conducted according to test procedures under Part 136 or, in the case of sludge use or disposal, approved under Part 136 unless otherwise specified in Part 503 unless other test procedures have been specified in this Order. (40 C.F.R. § 122.41(j)(4); § 122.44(i)(1)(iv).)

IV. STANDARD PROVISIONS – RECORDS

A. Except for records of monitoring information required by this Order related to the Discharger's sewage sludge use and disposal activities, which shall be retained for a period of at least five years (or longer as required by Part 503), the Discharger shall retain records of all monitoring information, including all calibration and maintenance records and all original strip chart recordings for continuous monitoring instrumentation, copies of all reports required by this Order, and records of all data used to complete the application for this Order, for a period of at least three (3) years from the date of the sample, measurement, report or application. This period may be extended by request of the Regional Water Board Executive Officer at any time. (40 C.F.R. § 122.41(j)(2).)

B. Records of monitoring information shall include:

1. The date, exact place, and time of sampling or measurements (40 C.F.R. § 122.41(j)(3)(i));
2. The individual(s) who performed the sampling or measurements (40 C.F.R. § 122.41(j)(3)(ii));
3. The date(s) analyses were performed (40 C.F.R. § 122.41(j)(3)(iii));
4. The individual(s) who performed the analyses (40 C.F.R. § 122.41(j)(3)(iv));
5. The analytical techniques or methods used (40 C.F.R. § 122.41(j)(3)(v)); and
6. The results of such analyses. (40 C.F.R. § 122.41(j)(3)(vi).)

C. Claims of confidentiality for the following information will be denied (40 C.F.R. § 122.7(b)):

1. The name and address of any permit applicant or Discharger (40 C.F.R. § 122.7(b)(1)); and
2. Permit applications and attachments, permits and effluent data. (40 C.F.R. § 122.7(b)(2).)

V. STANDARD PROVISIONS – REPORTING

A. Duty to Provide Information

The Discharger shall furnish to the Regional Water Board, State Water Board, or USEPA within a reasonable time, any information which the Regional Water Board, State Water Board, or USEPA may request to determine whether cause exists for modifying, revoking and reissuing, or terminating this Order or to determine compliance with this Order. Upon request, the Discharger shall also furnish to the Regional Water Board, State Water Board, or USEPA copies of records required to be kept by this Order. (40 C.F.R. § 122.41(h); Wat. Code, § 13267.)

B. Signatory and Certification Requirements

1. All applications, reports, or information submitted to the Regional Water Board, State Water Board, and/or USEPA shall be signed and certified in accordance with Standard Provisions – Reporting V.B.2, V.B.3, V.B.4, and V.B.5 below. (40 C.F.R. § 122.41(k).)

2. All permit applications shall be signed by either a principal executive officer or ranking elected official. For purposes of this provision, a principal executive officer of a federal agency includes: (i) the chief executive officer of the agency, or (ii) a senior executive officer having responsibility for the overall operations of a principal geographic unit of the agency (e.g., Regional Administrators of USEPA). (40 C.F.R. § 122.22(a)(3).).

3. All reports required by this Order and other information requested by the Regional Water Board, State Water Board, or USEPA shall be signed by a person described in Standard Provisions – Reporting V.B.2 above, or by a duly authorized representative of that person. A person is a duly authorized representative only if:

   a. The authorization is made in writing by a person described in Standard Provisions – Reporting V.B.2 above (40 C.F.R. § 122.22(b)(1));

   b. The authorization specifies either an individual or a position having responsibility for the overall operation of the regulated facility or activity such as the position of plant manager, operator of a well or a well field, superintendent, position of equivalent responsibility, or an individual or position having overall responsibility for environmental matters for the company. (A duly authorized representative may thus be either a named individual or any individual occupying a named position.) (40 C.F.R. § 122.22(b)(2)); and

   c. The written authorization is submitted to the Regional Water Board and State Water Board. (40 C.F.R. § 122.22(b)(3).)

4. If an authorization under Standard Provisions – Reporting V.B.3 above is no longer accurate because a different individual or position has responsibility for the overall operation of the facility, a new authorization satisfying the requirements of Standard Provisions – Reporting V.B.3 above must be submitted to the Regional Water Board and State Water Board prior to or together with any reports, information, or applications, to be signed by an authorized representative. (40 C.F.R. § 122.22(c).)

5. Any person signing a document under Standard Provisions – Reporting V.B.2 or V.B.3 above shall make the following certification:

   "I certify under penalty of law that this document and all attachments were prepared under my direction or supervision in accordance with a system designed to assure that qualified personnel properly gather and evaluate the information submitted. Based on my inquiry of the person or persons who manage the system or those persons directly responsible for gathering the information, the information submitted is, to the best of my knowledge and belief, true, accurate, and complete. I am aware that there are significant penalties for submitting false information, including the possibility of fine and imprisonment for knowing violations." (40 C.F.R. § 122.22(d).)

C. Monitoring Reports

1. Monitoring results shall be reported at the intervals specified in the Monitoring and Reporting Program (Attachment E) in this Order. (40 C.F.R. § 122.22(l)(4).)

2. Monitoring results must be reported on a Discharge Monitoring Report (DMR) form or forms provided or specified by the Regional Water Board or State Water Board for reporting results of monitoring of sludge use or disposal practices. (40 C.F.R. § 122.41(l)(4)(i).)

3. If the Discharger monitors any pollutant more frequently than required by this Order using test procedures approved under Part 136 or, in the case of sludge use or disposal, approved under Part 136 unless otherwise specified in Part 503, or as specified in this Order, the results of this monitoring shall be included in the calculation and reporting of the data submitted in the DMR or sludge reporting form specified by the Regional Water Board. (40 C.F.R. § 122.41(l)(4)(ii).)

4. Calculations for all limitations, which require averaging of measurements, shall utilize an arithmetic mean unless otherwise specified in this Order. (40 C.F.R. § 122.41(l)(4)(iii).)

D. Compliance Schedules

Reports of compliance or noncompliance with, or any progress reports on, interim and final requirements contained in any compliance schedule of this Order, shall be submitted no later than 14 days following each schedule date. (40 C.F.R. § 122.41(l)(5).)

E. Twenty-Four Hour Reporting

1. The Discharger shall report any noncompliance that may endanger health or the environment. Any information shall be provided orally within 24 hours from the time the Discharger becomes aware of the circumstances. A written submission shall also be provided within five (5) days of the time the Discharger becomes aware of the circumstances. The written submission shall contain a description of the noncompliance and its cause; the period of noncompliance, including exact dates and times, and if the noncompliance has not been corrected, the anticipated time it is expected to continue; and steps taken or planned to reduce, eliminate, and prevent reoccurrence of the noncompliance. (40 C.F.R. § 122.41(l)(6)(i).)

2. The following shall be included as information that must be reported within 24 hours under this paragraph (40 C.F.R. § 122.41(l)(6)(ii)):

   a. Any unanticipated bypass that exceeds any effluent limitation in this Order. (40 C.F.R. § 122.41(l)(6)(ii)(A).)

   b. Any upset that exceeds any effluent limitation in this Order. (40 C.F.R. § 122.41(l)(6)(ii)(B).)

3. The Regional Water Board may waive the above-required written report under this provision on a case-by-case basis if an oral report has been received within 24 hours. (40 C.F.R. § 122.41(l)(6)(iii).)

F. Planned Changes

The Discharger shall give notice to the Regional Water Board as soon as possible of any planned physical alterations or additions to the permitted facility. Notice is required under this provision only when (40 C.F.R. § 122.41(l)(1)):

1. The alteration or addition to a permitted facility may meet one of the criteria for determining whether a facility is a new source in section 122.29(b) (40 C.F.R. § 122.41(l)(1)(i)); or

2. The alteration or addition could significantly change the nature or increase the quantity of pollutants discharged. This notification applies to pollutants that are not subject to effluent limitations in this Order. (40 C.F.R. § 122.41(l)(1)(ii).)

3. The alteration or addition results in a significant change in the Discharger's sludge use or disposal practices, and such alteration, addition, or change may justify the application of permit conditions that are different from or absent in the existing permit, including notification of additional use or disposal sites not reported during the permit application process or not reported pursuant to an approved land application plan. (40 C.F.R.§ 122.41(l)(1)(iii).)

G. Anticipated Noncompliance

The Discharger shall give advance notice to the Regional Water Board or State Water Board of any planned changes in the permitted facility or activity that may result in noncompliance with General Order requirements. (40 C.F.R. § 122.41(l)(2).)

H. Other Noncompliance

The Discharger shall report all instances of noncompliance not reported under Standard Provisions – Reporting V.C, V.D, and V.E above at the time monitoring reports are submitted. The reports shall contain the information listed in Standard Provision – Reporting V.E above. (40 C.F.R. § 122.41(l)(7).)

I. Other Information

When the Discharger becomes aware that it failed to submit any relevant facts in a permit application, or submitted incorrect information in a permit application or in any report to the Regional Water Board, State Water Board, or USEPA, the Discharger shall promptly submit such facts or information. (40 C.F.R. § 122.41(l)(8).)

VI. STANDARD PROVISIONS – ENFORCEMENT

A. The Regional Water Board is authorized to enforce the terms of this permit under several provisions of the Water Code, including, but not limited to, sections 13385, 13386, and 13387.

VII. ADDITIONAL PROVISIONS – NOTIFICATION LEVELS

A. Publicly-Owned Treatment Works (POTWs)

All POTWs shall provide adequate notice to the Regional Water Board of the following (40 C.F.R. § 122.42(b)):

1. Any new introduction of pollutants into the POTW from an indirect discharger that would be subject to sections 301 or 306 of the CWA if it were directly discharging those pollutants (40 C.F.R. § 122.42(b)(1)); and

2. Any substantial change in the volume or character of pollutants being introduced into that POTW by a source introducing pollutants into the POTW at the time of adoption of the Order. (40 C.F.R. § 122.42(b)(2).)

3. Adequate notice shall include information on the quality and quantity of effluent introduced into the POTW as well as any anticipated impact of the change on the quantity or quality of effluent to be discharged from the POTW. (40 C.F.R. § 122.42(b)(3).)

ATTACHMENT E – MONITORING AND REPORTING PROGRAM

Table of Contents

Attachment E – Monitoring and Reporting Program (MRP) 3

I. General Monitoring Provisions 3

A. General Monitoring Provision 3

B. Laboratory Certification 7

II. Monitoring Locations 7

III. Influent Monitoring Requirements 8

A. Monitoring Location M-INF 1 and M-INF 2 8

IV. Effluent Monitoring Requirements to Surface Water 9

A. Effluent Monitoring Locations M-003, M-004, & M-007 9

B. Dewatered Groundwater Monitoring – Not Applicable 13

V. Whole Effluent Toxicity Testing Requirements 13

A. Toxicity Monitoring Requirements at M-003A, M-004A, and M-007 13

VI. Land Discharge Monitoring Requirements – Not Applicable 16

VII. RECYCLED WATER Monitoring Requirements 16

A. Monitoring Locations REC-001, REC-002, and REC-003 16

B. Monitoring Users 16

C. UV Disinfection System Monitoring Requirements 17

VIII. Receiving Water Monitoring Requirements – Surface Water and Groundwater 17

A. Monitoring Requirements for Surface Water 17

B. Monitoring Requirements for Groundwater – Not Applicable 18

IX. Other Monitoring Requirements 18

A. Biosolids Monitoring 18

B. Stormwater Monitoring 18

C. Water Supply Monitoring 19

D. Pretreatment Monitoring and Reporting 19

X. Reporting Requirements 21

A. General Monitoring and Reporting Requirements 22

B. Self Monitoring Reports (SMRs) 23

C. Discharge Monitoring Reports (DMRs) 26

D. Other Reports 26

List of Tables

Table 1 Annual Sampling Schedule 7
Table 2 Monitoring Station Locations 7
Table 3 Influent Monitoring M-INF 1 and M-INF 2* 8
Table 4 Tertiary Effluent Monitoring M-003A, M-004A, & M-007 10
Table 5 Tertiary Effluent Monitoring M-003B, M-004B. & M-007 12
Table 6 Reclamation Monitoring at REC-001, REC-002, & REC-003 16
Table 7 Receiving Water Monitoring Requirements at R-001, R-002, & R-003 17
Table 8 Biosolids Monitoring Requirements 18
Table 9 Reporting Requirements 23
Table 10 Monitoring Periods and Reporting Schedule 24

ATTACHMENT E – MONITORING AND REPORTING PROGRAM (MRP)

The Code of Federal Regulations section 122.48 requires that all NPDES permits specify monitoring and reporting requirements. Water Code Sections 13267 and 13383 also authorize the Regional Water Quality Control Board (Regional Water Board) to require technical and monitoring reports. This MRP establishes monitoring and reporting requirements, which implement the federal and California regulations.

I. GENERAL MONITORING PROVISIONS

A. General Monitoring Provision

1. All sampling and sample preservation shall be in accordance with the current edition of "Standard Methods for the Examination of Water and Wastewater" (American Public Health Association), or 40CFR136 "Guidelines Establishing Test Procedures for the Analysis of Pollutants," promulgated by the United States Environmental Protection Agency (EPA),

2. All laboratory analyses shall be performed in accordance with test procedures under 40 CFR 136 "Guidelines Establishing Test Procedures for the Analysis of Pollutants," promulgated by the United States Environmental Protection Agency (EPA), unless otherwise specified in this MRP. In addition, the Regional Water Board Executive Officer and/or EPA, at their discretion, may specify test methods that are more sensitive than those specified in 40 CFR 136 (See also I.5., below).

3. Chemical, bacteriological, and bioassay analyses shall be conducted at a laboratory certified for such analyses by the State Water Resources Control Board's Division of Drinking Water, in accordance with the provision of Water Code Section 13176, and must include quality assurance/quality control data with their reports, or EPA or at laboratories approved by the Regional Water Board's Executive Officer.

4. In conformance with federal regulations 40 CFR 122.45(c), analyses to determine compliance with the effluent limitations for metals shall be conducted using the total recoverable method. For Chromium (VI), the dissolved method in conformance with 40 CFR 136 may be used to measure compliance with the Chromium (VI) limitation.

5. For effluent wastewater monitoring:

   a. The Discharger shall require its testing laboratory to calibrate the analytical system down to the minimum level (ML)[1] specified in Attachment "H" for priority

---

[1] *Minimum level is the concentration at which the entire analytical system must give a recognizable signal and acceptable point. The ML is the concentration in a sample that is equivalent to the concentration of the lowest calibration standard analyzed by a specific analytical procedure, assuming that all the method specified sample weights, volumes, and processing steps have been followed.*

pollutants with effluent limitations in this Order, unless an alternative minimum level is approved by the Regional Water Board's Executive Officer. When there is more than one ML value for a given substance, the Discharger shall use the ML values, and their associated analytical methods, listed in Attachment "H" that are below the calculated effluent limitation. The Discharger may select any one of those cited analytical methods for compliance determination. If no ML value is below the effluent limitation, then the lowest ML value and its associated analytical method, listed in Attachment "H" shall be used. Any internal quality control data associated with the sample must be reported when requested by the Executive Officer. The Regional Water Board will reject the quantified laboratory data if quality control data is unavailable or unacceptable.

b. The Discharger shall report the results of analytical determinations for the presence of chemical constituents in a sample using the following reporting protocols:

   (1) Sample results greater than or equal to the reported ML shall be reported as measured by the laboratory (i.e., the measured chemical concentration in the sample).

   (2) Sample results less than the reported ML, but greater than or equal to the laboratory's current Method Detection Limit (MDL)[2], shall be reported as "Detected, but Not Quantified," or "DNQ." The estimated chemical concentration of the sample shall also be reported.

   (3) Sample results not detected above the laboratory's MDL shall be reported as "not detected" or "ND."

c. The Discharger shall submit to the Regional Water Board reports necessary to determine compliance with effluent limitations in this Order and shall follow the chemical nomenclature and sequential order of priority pollutant constituents shown in Attachment "G" – Priority Pollutant Lists. The Discharger shall report with each sample result:

   (1) The reporting level achieved by the testing laboratory; and

   (2) The laboratory's current MDL, as determined by the procedure found in 40 CFR 136.

d. For receiving water monitoring and for those priority pollutants without effluent limitations, the Discharger shall require its testing laboratory to quantify constituent concentrations to the lowest achievable MDL as determined by the

---

2 *MDL is the minimum concentration of a substance that can be measured and reported with 99 percent confidence that the analytical concentration is greater than zero, as defined in 40 CFR 136, Appendix B.*

procedure found in 40 CFR 136. In situations where the most stringent applicable receiving water objective (freshwater or human health (consumption of organisms only), as specified for that pollutant in 40 CFR 131.38[3] is below the minimum level value specified in Attachment "H" and the Discharger cannot achieve an MDL value for that pollutant below the ML value, the Discharger shall submit justification why a lower MDL value cannot be achieved. Justification shall be submitted together with monthly monitoring reports.

6. For non-priority pollutants monitoring, all analytical data shall be reported with identification of practical quantitation level and with method detection limits, as determined by the procedure found in 40 CFR 136.

7. The Discharger shall have, and implement an acceptable written quality assurance (QA) plan for laboratory analyses. Duplicate chemical analyses must be conducted on a minimum of ten percent (10%) of the samples, or at least one sample per month, whichever is greater. A similar frequency shall be maintained for analyzing spiked samples. When requested by the Regional Water Board or EPA, the Discharger will participate in the NPDES discharge monitoring report QA performance study.

8. The Discharger shall assure that records of all monitoring information are maintained and accessible for a period of at least five years (this retention period supersedes the retention period specified in Section IV.A. of Attachment D) from the date of the sample, report, or application. This period of retention shall be extended during the course of any unresolved litigation regarding this discharge or by the request of the Regional Water Board at any time. Records of monitoring information shall include:

   a. The information listed in Attachment D- IV Standard Provisions – Records, subparagraph B. of this Order;
   b. The laboratory which performed the analyses;
   c. The date(s) analyses were performed;
   d. The individual(s) who performed the analyses;
   e. The modification(s) to analytical techniques or methods used;
   f. All sampling and analytical results, including
      (1) Units of measurement used;
      (2) Minimum reporting level for the analysis (minimum level);
      (3) Results less than the reporting level but above the method detection limit (MDL);
      (4) Data qualifiers and a description of the qualifiers;
      (5) Quality control test results (and a written copy of the laboratory quality assurance plan);
      (6) Dilution factors, if used; and
      (7) Sample matrix type.
   g. All monitoring equipment calibration and maintenance records;
   h. All original strip charts from continuous monitoring devices;

---

3 *See Federal Register/ Vol. 65, No. 97 / Thursday, May 18, 2000 / Rules and Regulations.*

i. All data used to complete the application for this Order; and,
j. Copies of all reports required by this Order.
k. Electronic data and information generated by the Supervisory Control And Data Acquisition (SCADA) System.

9. The flow measurement system shall be calibrated at least once per year or more frequently, to ensure continued accuracy.

10. All monitoring instruments and devices used by the Discharger to fulfill the prescribed monitoring program shall be properly maintained and calibrated as necessary to ensure their continued accuracy. In the event that continuous monitoring equipment is out of service for greater than a 24-hour period, the Discharger shall obtain a representative grab sample each day the equipment is out of service. The Discharger shall correct the cause(s) of failure of the continuous monitoring equipment as soon as practicable. In its monitoring report, the Discharger shall specify the period(s) during which the equipment was out of service and if the problem has not been corrected, shall identify the steps which the Discharger is taking or proposes to take to bring the equipment back into service and the schedule for these actions.

11. Monitoring and reporting shall be in accordance with the following:

a. Samples and measurements taken for the purpose of monitoring shall be representative of the monitored activity.
b. The monitoring and reporting of influent, effluent, and sludge shall be done more frequently as necessary to maintain compliance with this Order and or as specified in this Order.
c. Whenever the Discharger monitors any pollutant more frequently than is required by this Order, the results of this monitoring shall be included in the calculation and reporting of the data submitted in the discharge monitoring report specified by the Executive Officer.
d. A "grab" sample is defined as any individual sample collected in less than 15 minutes.
e. A composite sample is defined as a combination of no fewer than eight individual grab samples obtained over the specified sampling period. The volume of each individual grab sample shall be proportional to the discharge flow rate at the time of sampling. The compositing period shall equal the specific sampling period, or 24 hours, if no period is specified.
f. Daily samples shall be collected on each day of the week.
g. Monthly samples shall be collected on any representative day of each month.

h. Quarterly samples: A representative sample shall be taken on any representative day of January, April, July, and October and test results shall be reported in either micrograms/liter (ug/L) or milligrams/liter (mg/L), as appropriate, by the first day of the second month following the monitoring period that the sample was taken.

i. Semi-annual samples shall be collected in January and July.

j. Annual samples shall be collected in accordance with the following schedule:

Table 1 Annual Sampling Schedule

Year	Annual Samples
2015	October
2016	January
2017	April
2018	July
2019	October
2020	Januaryl

B. Laboratory Certification

Laboratories analyzing monitoring samples shall be certified by the California State Water Resources Control Board's Division of Drinking Water, in accordance with the provision of Water Code section 13176, and must include quality assurance/quality control data with their reports.

II. MONITORING LOCATIONS

The Discharger shall establish the following monitoring locations to demonstrate compliance with the effluent limitations, discharge specifications, and other requirements in this Order:

Table 2 Monitoring Station Locations

Discharge Point Name	Monitoring Location Name	Monitoring Location Description	Latitude and Longitude
--	M-INF 1	Influent distribution channel at MWRP	33°39'48" & 117°50'19"
	M-INF 2	Influent channel at LAWRP	33°38'16" & 117°42'54"
001	REC-001	Effluent from MWRP to recycling system	33°39'50" & 117°50'17"
002	REC-002	Effluent to San Joaquin Reservoir	33°37'12" & 117°50'39"
003	M-003A	Effluent to Rattlesnake Reservoir	33°43'37" & 117°44'43"
003	M-003B	Rattlesnake Reservoir ZID boundary	33°43'37" & 117°44'27"
004	M-004A	Effluent to Sand Canyon Reservoir	33°38'55" & 117°47'47"
004	M-004B	Sand Canyon Reservoir ZID boundary	33°38'50" & 117°47'50"
007	M-007	Effluent to Syphon Reservoir	33°42'36" & 117°43'56"
008	REC-003	Effluent from LAWRP to recycling system	33°38'16" & 117°42'50"
Storm-007	M-008	Emergency stormwater overflow to reach	33°39'47" & 117°50'16"

Table 2 Monitoring Station Locations

Discharge Point Name	Monitoring Location Name	Monitoring Location Description	Latitude and Longitude
		1 of San Diego Creek	
Storm-008	M-009	Emergency stormwater overflow to San Joaquin Marsh	33°39'51" & 117°50'27"
	R-001	Receiving surface water—Rattlesnake Reservoir 3 location spatial composite	33°43'46" & 117°44'12" 33°43'42" & 117°44'23" 33°43'41" & 117°44'29"
	R-002	Receiving surface water—Sand Canyon Reservoir location 3 spatial composite	33°38'38" & 117°47'46" 33°38'48" & 117°47'48" 33°38'51" & 117°47'47"
	R-003	Receiving surface water—Syphon Reservoir location 3 spatial composite	33°43'39" & 117°44'28" 33°43'43" & 117°44'20" 33°43'46" & 117°44'13"

III. INFLUENT MONITORING REQUIREMENTS

A. Monitoring Location M-INF 1 and M-INF 2

1. Sampling stations shall be established for the points of inflow to each treatment plant. The sampling station(s) shall be located upstream of any in-plant return flows and where representative sample(s) of the influent of the treatment plant can be obtained.

2. The Discharger shall monitor the influent to the Facilities at Monitoring Location M-INF 1 and M-INF 2 as follows. If more than one analytical test method is listed for a given parameter, the Discharger must select from the listed methods and corresponding Minimum Level:

Table 3 Influent Monitoring M-INF 1 and M-INF 2*

Parameter	Units	Sample Type	Minimum Sampling Frequency	Required Analytical Test Method
Flow	mgd	Recorder/Totalizer	Continuous	See Section I.A.3, above, of this MRP
pH	pH Units	Recorder	Continuous	"
Specific Conductance	µmhos/cm	Recorder	Continuous	"
COD	mg/L	Composite	Weekly	"
BOD_5	mg/L	Composite	Weekly	
Total Suspended Solids	mg/L	Composite	Weekly	"
Total Dissolved Solids	mg/L	Composite	Monthly	"
Ammonia-Nitrogen	mg/L	Grab	Monthly	"
Total Kjeldahl Nitrogen	mg/L	Composite	Monthly	"
Total Inorganic Nitrogen	mg/L	Composite	Quarterly	See Section I.A.3. above, of this MRP

Table 3 Influent Monitoring M-INF 1 and M-INF 2*

Parameter	Units	Sample Type	Minimum Sampling Frequency	Required Analytical Test Method
Total Hardness	mg/L	Composite	Quarterly	"
Arsenic	µg/L	Composite	Quarterly	See Section I.A.2. above, of this MRP
Total Recoverable Cadmium	µg/L	Composite	Quarterly	See Section I.A.2. above, of this MRP
Total Chromium or Chromium VI	µg/L	Composite	Quarterly	"
Total Recoverable Copper	µg/L	Composite	Quarterly	"
Total Recoverable Lead	µg/L	Composite	Quarterly	"
Total Recoverable Mercury	µg/L	Composite	Quarterly	"
Total Recoverable Nickel	µg/L	Composite	Quarterly	"
Selenium	µg/L	Composite	Quarterly	"
Total Recoverable Silver	µg/L	Composite	Quarterly	"
Total Recoverable Zinc	µg/L	Composite	Quarterly	"
Cyanide (Free)	µg/L	Grab	Quarterly	See Section I.A.2. above, of this MRP
Volatile organic portion of EPA Priority Pollutants[4] (See Attachment G)	µg/L	Grab	Annually	"
Remaining EPA Priority Pollutants[5] (See Attachment G)	µg/L	Composite	Annually	See Section I.A.2. above, of this MRP

* = Parameters applicable to M-INF 2 are flow, pH, specific conductance, BOD_5, total suspended solids, total dissolved solids, total inorganic nitrogen, and ammonia-nitrogen.

IV. EFFLUENT MONITORING REQUIREMENTS TO SURFACE WATER

The Discharger shall monitor the treated effluent at monitoring locations as follows. If more than one analytical test method is listed for a given parameter, the Discharger must select from the listed methods and corresponding Minimum Level.

A. Effluent Monitoring Locations M-003, M-004, & M-007

1. The Discharger shall monitor tertiary treated effluent for DP 003, DP 004 and DP 007 at Monitoring Locations M-003A, M-004A, and M-007 as follows.

---

4 *EPA priority pollutants are those remaining volatile organic pollutants listed in Attachment "G" which are not specifically listed in this monitoring program table.*

5 *Remaining EPA priority pollutants are those pollutants listed in Attachment "G" which are not volatile organics and pollutants not specifically listed in this monitoring program table.*

Table 4 Tertiary Effluent Monitoring M-003A, M-004A, & M-007

Parameter	Units	Sample Type	Minimum Sampling Frequency	Required Analytical Test Method and Minimum Level, units, respectively
Flow	mgd	Recorder/ Totalizer	Continuous	See Section I.A.3. above, of this MRP
Specific Conductance	µmhos/cm	Recorder	Continuous	"
pH	pH units	"	Continuous	"
Turbidity[6]	NTU	Recorder	Continuous	"
CT[7]	mg/L-min	Recorder	Continuous	See Section I.A.3., above, of this MRP
Coliform Organisms[8]	MPN per 100 ml[9]	Grab	Daily	See Section I.A.3., above of this MRP
Temperature	°C	Grab	Weekly	See Section I.A.3. above, of this MRP
BOD_5	mg/L	Composite	Weekly	See Section I.A.3. above, of this MRP
Total Suspended Solids	mg/L	Composite	Weekly	See Section I.A.3. above
COD	mg/L	Composite	Monthly	"
Ammonia-Nitrogen	mg/L	Grab	Monthly	See Section I.A.3. above, of this MRP
Total Dissolved Solids	mg/L	Composite	Monthly	See Section I.A.3. above
Total Hardness	mg/L	Composite	Monthly	See Section I.A.3. above
Total Inorganic Nitrogen	mg/L	Composite	Monthly	See Section I.A.3. above
Total Nitrogen	mg/L	Composite	Monthly	See Section I.A.3. above
Total Phosphorous	mg/L	Composite	Monthly	See Section I.A.3. above
Total Recoverable Copper	µg/L	Composite	Monthly (See IV. A.9., below)	See Sections I.A.2., I.A.3., above of this MRP and RL[10] 5 µg/L
Total Recoverable Mercury	µg/L	Composite	Monthly (See IV. A.9., below)	See Sections I.A.2., I.A.3. above of this MRP and RL 0.015 µg/L
Bis (2-ethylhexyl) phthalate	µg/L	Grab	Monthly	See Sections I.A.2., I.A.3., above of this MRP and RL 5 µg/L
Toxicity	TUc	See Section	Monthly	See Section V, Below

---

6 *Turbidity analysis shall be continuous, performed by a continuous recording turbidimeter. Compliance with the daily average operating filter effluent turbidity shall be determined by averaging the levels of recorded turbidity taken at a minimum of four-hour intervals over a 24-hour period. The results of the daily average turbidity determinations shall be reported monthly.*

7 *CT is the product of total chlorine residual and modal contact time measured at the same point. Compliance with CT shall be determined daily based on low chlorine residual and/or peak flow.*

8 *Samples for total coliform bacteria shall be collected daily. Samples shall be taken from the disinfected effluent.*

9 *MPN/100mL = Most Probable Number per 100 milliliters.*

10 *Reporting Level.*

Table 4 Tertiary Effluent Monitoring M-003A, M-004A, & M-007

Parameter	Units	Sample Type	Minimum Sampling Frequency	Required Analytical Test Method and Minimum Level, units, respectively
		V.A, Below		
Bicarbonate	mg/L	Composite	Quarterly	See Section I.A.3. above, of this MRP
Boron	mg/L	Composite	Quarterly	See Section I.A.3. above
Calcium	mg/L	Composite	Quarterly	See Section I.A.3. above
Carbonate	mg/L	Composite	Quarterly	See Section I.A.3. above
Chloride	mg/L	Composite	Quarterly	See Section I.A.3. above
Fluoride	mg/L	Composite	Quarterly	See Section I.A.3. above, of this MRP
Magnesium	mg/L	Composite	Quarterly	See Section I.A.3. above
Sodium	mg/L	Composite	Quarterly	See Section I.A.3. above
Sulfate	mg/L	Composite	Quarterly	See Section I.A.3. above
Aluminum	mg/L	Composite	Quarterly	See Section I.A.3. above
Antimony	mg/L	Composite	Quarterly	See Sections I.A.2., I.A.3., above of this MRP
Arsenic	µg/L	Composite	Quarterly, (See IV. A.3., below)	See Section I.A.3. above
Barium	µg/L	Composite	Quarterly, (See IV. A.3., below)	See Section I.A.3. above
Bromodichloromethane	µg/L	Grab	Monthly	See Sections I.A.2., I.A.3., above of this MRP and ML 5 µg/L
Total Recoverable Cadmium	µg/L	Composite	Quarterly (See IV. A.3., below)	See Sections I.A.2., I.A.3., above of this MRP and RL 0.5 µg/L
Chromium VI or Total Chromium[11]	µg/L	Composite	Quarterly (See IV. A.3., below)	See Sections I.A.2., I.A.3. above of this MRP and RL 5 µg/L, Total Cr, RL 2 µg/L
Cobalt	µg/L	Composite	Quarterly (See IV. A.3., below)	See Section I.A.3. above,
Cyanide, free	µg/L	Grab	monthly (See IV. A.11., below)	See Sections I.A.2., I.A.3., above of this MRP and RL 5 µg/L
Total Recoverable Lead	µg/L	Composite	Quarterly (See IV. A.3., below)	See Sections I.A.2., I.A.3. above of this MRP and RL 2 µg/L
Total Recoverable Nickel	µg/L	Composite	Quarterly (See IV. A.3., below)	See Sections I.A.2., I.A.3., above of this MRP and RL
Total Recoverable Selenium	µg/L	Composite	Quarterly (See IV. A.3., below)	See Sections I.A.2., I.A.3. above of this MRP and RL 2 µg/L

11 *If Total Chromium test result is greater than 11 µg/L, the following sample shall be tested for Chromium VI, until directed otherwise.*

Table 4 Tertiary Effluent Monitoring M-003A, M-004A, & M-007

Parameter	Units	Sample Type	Minimum Sampling Frequency	Required Analytical Test Method and Minimum Level, units, respectively
Total Recoverable Silver	µg/L	Composite	Quarterly (See IV. A.3., below)	See Sections I.A.2., I.A.3., above of this MRP and RL 1 µg/L
Total Recoverable Zinc	µg/L	Composite	Quarterly (See IV. A.3., below)	See Sections I.A.2., I.A.3., above of this MRP
Volatile organic portion of remaining EPA Priority Pollutants (See Attachment "G")	µg/L	Grab	Annually (See IV. A.4., below)	See Sections I.A.2., I.A.3., above of this MRP
Remaining EPA Priority Pollutants (See Attachment "G")	µg/L	Composite	Annually (See IV. A.4., below)	See Sections I.A.2., I.A.3., above of this MRP

2. The Discharger shall monitor tertiary treated effluent for DP 003, DP 004, and DP 007 at Monitoring Locations M-003B, M-004B, and M-007 (respectively) for Total Residual Chlorine as follows.

Table 5 Tertiary Effluent Monitoring M-003B, M-004B. & M-007

Parameter	Units	Sample Type	Minimum Sampling Frequency	Required Analytical Test Method and Minimum Level, units, respectively
Total Residual Chlorine	mg/L	Grab	Weekly	See Section I.A.3. above of this MRP

3. The monitoring frequency for those priority pollutants that are detected during the required quarterly monitoring at a concentration greater than the concentration specified for that pollutant[12] in Attachment I shall be accelerated to monthly. To return to the monitoring frequency specified, the Discharger shall request and receive approval from the Regional Water Board's Executive Officer or designee.

4. The monitoring frequency for those priority pollutants that are detected during the required annual monitoring at a concentration greater than the concentration specified for that pollutant[12] in Attachment I shall be accelerated to quarterly for one year. To return to the monitoring frequency specified, the Discharger shall request and receive approval from the Regional Water Board's Executive Officer or designee.

---

12 *For those priority pollutants without specified criteria values, accelerated monitoring is not required.*

5. If there are no discharges of treated effluent to DP 003. DP 004, and DP 007, the Discharger is not required to monitor for all the constituents in Table 4 and Table 5, above. However, the Discharger shall record on a permanent log on a daily basis when there is no discharge and report this information together with the monthly report.

6. If there are discharges of water other than treated effluent at DP 003, DP 004, and DP 007, the volume (mgd), date and source of the water shall be recorded on the permanent log. This information shall be reported together with the monthly report.

7. The Discharger may demonstrate compliance with the Effluent Limitations (except for Total Chlorine Residual), Discharge Specifications, and Monitoring. and Reporting Requirements in this Order for discharges at Discharge Locations DP 002, DP 003, DP 004, and DP 007 by monitoring at Discharge Location DP 001 (monitoring location REC-001).

8. The Discharger shall monitor and report the volume of groundwater pumped into the recycled water distribution system and the volume of recycled water discharged into the Discharger's reservoirs. The Discharger shall also monitor and report when there is "No Discharge" to the reservoirs of either groundwater or recycled water.

9. The Discharger is required to conduct monthly monitoring for copper and mercury. After one year, if the monthly monitoring results show that the effluent concentration for copper or mercury (at acceptable reporting levels) is less than the concentration specified for these pollutants in Attachment I (Triggers for Monitoring Priority Pollutants), the Discharger may reduce the frequency of monitoring for copper or mercury from monthly to quarterly upon approval by the Regional Water Board's Executive Officer or designee.

10. The Discharger is required to conduct monthly monitoring for free cyanide. After one year, if the monthly monitoring results show that the effluent concentration for free cyanide is non-detect (at acceptable reporting levels), the Discharger may reduce the frequency of monitoring for free cyanide from monthly to quarterly upon approval by the Regional Water Board's Executive Officer or designee. Also, the Discharger is advised to evaluate and select a USEPA approved test method for free cyanide testing that is not prone to significant interference from the use of sodium hydroxide as a sample preservative.

B. Dewatered Groundwater Monitoring – Not Applicable.

V. WHOLE EFFLUENT TOXICITY TESTING REQUIREMENTS

A. Toxicity Monitoring Requirements at M-003A, M-004A, and M-007

1. The Discharger shall conduct critical life stage chronic toxicity testing in accordance with Method 1002.0 - Survival and Reproduction test for water flea, Ceriodaphnia dubia as specified in "Short-term Methods for Estimating the Chronic Toxicity of Effluents and Receiving Waters to Freshwater Organisms", Fourth Edition, Environmental Monitoring Systems Laboratory, U.S. Environmental Protection Agency 2002, Cincinnati, Ohio (October 2002, EPA-821-R-02-013).

2. The Discharger shall establish procedures to ensure that the toxicity testing laboratory notifies the Discharger of the results of toxicity testing by the end of the next business day following the completion of such tests.

3. A minimum of one monthly chronic toxicity test shall be conducted on representative composite samples.

4. The Discharger shall increase the frequency of chronic toxicity testing to every two weeks whenever any test result exceeds 1.0 TUc. The first test under the accelerated schedule shall be conducted within two weeks of receiving notice of the test that exceeds 1.0 TUc, and every two weeks thereafter. The Discharger may resume the regular test schedule when two consecutive chronic toxicity tests result in 1.0 TUc, or when the results of the Initial Investigation Reduction Evaluation conducted by the Discharger have adequately addressed the identified toxicity problem.

5. The presence of chronic toxicity shall be estimated as specified in Short-Term Methods for Estimating the Chronic Toxicity of Effluents and Receiving Waters to Freshwater Organisms. Fourth Edition. EPA-821-R-02-013.

6. Results for both survival and reproduction endpoints shall be reported in TUc, where TUc = 100/NOEC or 100/ICp or ECp (p is the percent effluent). The no observed effect concentration (NOEC) is the highest concentration of toxicant to which organisms are exposed in a chronic test, that causes no observable adverse effect on the tests organisms (e.g., the highest concentration of toxicant to which the values for the observed responses are not statistically significant different from the controls). The inhibition concentration (IC) is a point estimate of the toxicant concentration that causes a given percent reduction in a non-quantal biological measurement (e.g., reproduction or growth) calculated from a continuous model (the EPA Interpolation Method). The effective concentration (EC) is a point estimate of the toxicant concentration that would cause a given percent reduction in quantal biological measurement (e.g., larval development, survival) calculated from a continuous model (e.g., probit).

7. Additional Testing Requirements

   a. A series of at least five dilutions and a control will be tested. Five dilutions of the series shall be within 60% to 100% effluent concentration.
   b. If organisms are not cultured in-house, concurrent testing with reference toxicants shall be conducted. Where organisms are cultured in-house, monthly reference toxicant testing is sufficient. Reference toxicants shall also be

conducted using the same test conditions as the effluent toxicity test (e.g., same test duration, etc).

c. If either of the reference toxicant test or the effluent tests do not meet all test acceptability criteria as specified in the manual[13], then the Discharger must re-sample and re-test within 14 days or as soon as the Discharger receives notification of failed tests.

d. Control and dilution water should be receiving water or lab water, as appropriate, as described in the manual. If the dilution water used is different from the culture water, a second control, using culture water shall also be used.

8. Quality Assurance/Control:

a. A quality assurance/quality control (QA/QC) program shall be instituted to verify the results of the effluent toxicity monitoring program. The QA/QC program shall include but shall not be limited to the following: (1) Selection of an independent testing laboratory; (2) Approval by the Regional Board's Executive Officer or Executive Officer's designee of the independent testing laboratory; (3) Once during the year, the Discharger shall split samples with the independent laboratory for conducting chronic toxicity testing; (4) Results from the independent laboratory shall be submitted to the Regional Board and the Discharger for evaluation; (5) The Discharger shall review the test acceptability criteria in accordance with the EPA test protocols, Short-Term Methods for Estimating the Chronic Toxicity of Effluents and Receiving Waters to Freshwater Organisms. Fourth Edition. EPA-821-R-02-013.

b. Results from the independent laboratory of the annual QA/QC split samples are to be used for Quality Assurance/Quality Control (QA/QC) purposes only and not for purposes of determining compliance with other requirements of this Order.

9. The use of alternative methods for measuring chronic toxicity may be considered by the Executive Officer on a case–by-case basis. The use of a different test species, in lieu of conducting the required test species may be considered and approved by the Executive Officer on a case-by case basis upon submittal of the documentation supporting Discharger's determination that a different species is more sensitive and appropriate.

10. Reporting: Results of all toxicity testing conducted within the month following the reporting period shall be submitted monthly in accordance with "Short-Term Methods for Estimating the Chronic Toxicity of Effluents and Receiving Waters to Freshwater Organisms. Fourth Edition. EPA-821-R-02-013." The report shall include a determination of the median value of all chronic toxicity testing results conducted during the two previous months.

---

13 *Refers to USEPA Manual "Short-Term Methods for Estimating the Chronic Toxicity of Effluents and Receiving Waters to Freshwater Organisms. - 4th Ed., October 2002, EPA-821-R-02-013.*

11. Whenever an Initial Investigation Reduction Evaluation is conducted, the results of the evaluation shall be submitted upon completion. In addition, monthly status reports shall be submitted as part of the Discharger's monitoring report for the previous month.

VI. LAND DISCHARGE MONITORING REQUIREMENTS – NOT APPLICABLE

VII. RECYCLED WATER MONITORING REQUIREMENTS

A. Monitoring Locations REC-001, REC-002, and REC-003

1. The Discharger shall monitor recycled water at REC-001, REC-002, and REC-003 as follows:

Table 6 Reclamation Monitoring at REC-001, REC-002, & REC-003

Parameter	Units	Sample Type	Minimum Sampling Frequency	Required Analytical Test Method
Flow	mgd	Recorder/Totalizer	Continuous	---
pH	Standard units	Recorder/Totalizer	Continuous	--
CT[14]	mg/L-min	Recorder	Continuous	See Section I.A.3., above, of this MRP
Turbidity	NTU	Recorder	Continuous	"
Coliform Organisms	MPN per 100 mL	Grab	Daily	"
BOD_5	mg/L	Composite	Weekly	See Section I.A.3., above, of this MRP
Total Suspended Solids	mg/L	Composite	Weekly	See Section I.A.3., above, of this MRP
TDS	mg/L	Composite	Monthly	See Section I.A.3., above, of this MRP

B. Monitoring Users

Whenever recycled water is supplied to a user, the Discharger shall record on a permanent log: the volume of recycled water supplied; the user of recycled water; the locations of those sites including the names of the groundwater management zones underlying the recycled water use sites; type of use (e.g. irrigation, industrial, etc); and the dates at which water is supplied. The Discharger shall submit annually a summary report of the recorded information by groundwater management zone to the Regional Water Board.

---

14 *CT is the product of total chlorine residual and modal contact time measured at the same point.*

C. UV Disinfection System Monitoring Requirements

1. The Discharger shall provide continuous, reliable monitoring and recording of flow, UV intensity, UV dose, UV transmittance level and turbidity.
2. The Discharger shall continuously monitor and record the age of each lamp.
3. The Discharger shall comply with other acceptance conditions included in Attachment L of this Order and/or modified acceptance conditions specified by SWRCB's DDW that supersede the acceptance conditions specified in Attachment L.

VIII. RECEIVING WATER MONITORING REQUIREMENTS – SURFACE WATER AND GROUNDWATER

A. Monitoring Requirements for Surface Water

1. The Discharger shall monitor receiving water at R-001, R-002, & R-003 as follows:

Table 7 Receiving Water Monitoring Requirements at R-001, R-002, & R-003

Parameter	Units	Sample Type	Minimum Sampling Frequency	Required Analytical Test Method
Total Chlorine Residual	mg/L	Grab	weekly	See Section I.A.3., above, of this MRP
Dissolved Oxygen	mg/L	Grab	weekly	See Section I.A.3., above, of this MRP
Temperature	^{0}C	Grab	weekly	See Section I.A.3., above, of this MRP
pH	pH unit	Grab	weekly	"
Total Nitrogen	mg/L	Grab	monthly	See Section I.A.3., above, of this MRP
Total Inorganic Nitrogen	mg/L	Grab	monthly	See Section I.A.3., above, of this MRP
Ammonia Nitrogen	mg/L	Grab	monthly	See Section I.A.3., above, of this MRP
Hardness	mg/L	Grab	monthly	See Section I.A.3., above, of this MRP
Color change, foam, deposition of material, odor	--	Observe	monthly	See Section I.A.3., above, of this MRP
Volatile organic portion of EPA Priority Pollutants	µg/L	Grab	Semi-annually	See Section I.A.2., above, of this MRP
Remaining EPA Priority Pollutants	µg/L	Grab	Semi-annually	See Section I.A.2., above, of this MRP

2. The Discharger shall provide a permanent measuring device at the Sand Canyon Reservoir that shows surface water elevation based on mean sea level datum line. The device shall be accessible and elevation marking shall be easily readable.

3. The following shall also be monitored at Sand Canyon Reservoir:

a. Recycled water discharges into the reservoir shall be estimated and recorded daily on a permanent log.

b. Overflow discharges from the reservoir to Sand Canyon Wash shall be estimated and recorded daily on a permanent log.

c. The date and duration of storm events which have occurred and contributed storm water into the reservoir shall be noted and recorded daily on a permanent log.

d. Every Tuesday and Friday, the surface water elevation shall be determined and recorded on a permanent log.

B. Monitoring Requirements for Groundwater – Not Applicable

IX. OTHER MONITORING REQUIREMENTS

A. Biosolids Monitoring

1. The Discharger shall conduct biosolids monitoring as follows:

Table 8 Biosolids Monitoring Requirements

Parameter	Units	Sample Type	Minimum Sampling Frequency
Priority Pollutants	mg/kg	Grab	Semi-annual
Moisture Content	% solids	Grab	Quarterly

2. The Discharger shall maintain a permanent log of all the solids pumped and/or hauled away from the treatment facility for use/disposal elsewhere, including the date hauled, the volume or weight (in gallons or dry tons), type, (screenings, grit, raw sludge, biosolids), application (for further treatment at OCSD, agricultural, composting , etc), and destination. The information shall be reported quarterly.

3. If biosolids are used for land application, including composting, the Discharger must monitor for the pollutants included in Table 1 of 40 CFR Section 503.13 at the frequencies specified in 40 CFR 503.16, which is determined by the amount (tonnage) of biosolids that is land applied or bagged/containerized for distribution, and demonstrate pollutant (40 CFR 503.13), pathogen and vector (40 CFR 503.15) attraction reductions that are specified for land application. In addition, if the biosolids are disposed at a landfill, the Discharger must conduct a paint filter test on a representative biosolids sample to determine if the biosolids are suitable for this type of disposal. The monitoring results must be submitted to EPA Region 9 at the specified reporting frequency and format. The monitoring report must include details regarding the biosolids sample type (composite or grab) and monitoring location.

B. Stormwater Monitoring

The Discharger shall comply with Attachments K - Stormwater Monitoring and Reporting Requirements.

C. Water Supply Monitoring

1. In August of each year, a sample of each source of the water supplied to the sewered area shall be obtained and analyzed for total dissolved solids concentration expressed in "mg/L".

2. Monthly reports shall be submitted stating the amount (in percentage or acre-feet) supplied to the sewered area from each source of water and the resulting flow-weighted water supply quality for total dissolved solids.

D. Pretreatment Monitoring and Reporting

1. The Discharger shall submit to the Regional Water Board and the EPA Region 9, a semiannual compliance status report. The semiannual compliance status reports shall cover the periods January 1 - June 30 and July 1 - December 31. The reports shall be submitted by March 31 and September 30. This semiannual reporting requirement shall commence for the first full semiannual reporting period following issuance of this Order. The reports shall identify:

   a. All significant industrial users (SIUs) which violated any standards or reporting requirements during that quarter;

   b. The violations committed (distinguish between categorical and local limits);

   c. The enforcement actions undertaken; and

   d. The status of active enforcement actions from previous periods, including closeouts (facilities under previous enforcement actions which attained compliance during the quarter).

2. Annually, the Discharger shall submit a report to the Regional Water Board, the State Water Resources Control Board and the EPA Region 9 describing the pretreatment activities within the service area during the previous year. In the event that any control authority within the service area is not in compliance with any conditions or requirements of this Order or their approved pretreatment program (such as due to industrial user discharges, interjurisdictional agency agreement implementation issues, or other causes,) then the Discharger shall also include the reasons for non-compliance and state how and when the Discharger and the control authority shall comply with such conditions and requirements. This annual report shall cover operations from July 1 through June 30 of each fiscal year and is due on October 31 of each year. The report shall contain, but not be limited to, the following information:

   a. A summary of analytical results from representative, flow-proportioned, 24-hour composite sampling of the POTW's influent and effluent wastewaters for those

pollutants which are known or suspected to be discharged by industrial users (IUs) as identified by EPA under Section 307(a) of the CWA. The summary will include the result of annual full priority pollutant scan, with quarterly samples analyzed only for those pollutants[15] detected in the full scan. The Discharger shall also provide any influent or effluent monitoring data for non-priority pollutants which the Discharger believes may be causing or contributing to Interference, Pass Through or adversely impacting sludge quality. Sampling and analysis shall be performed in accordance with the techniques prescribed in 40 CFR 136 and amendments thereto.

b. A discussion of any upset, interference, or pass-through incidents at the treatment plant (if any), which the Discharger knows or suspects were caused by IUs of the POTW system. The discussion shall include the following:

(1) The reasons why the incidents occurred, the corrective actions taken, and, if known, the name and address of the IU(s) responsible.
(2) A review of the applicable pollutant limitations to determine whether any additional limitations, or changes to existing requirements, may be necessary to prevent pass through, interference or noncompliance with sludge disposal requirements.

c. A complete and updated list of the Discharger's significant industrial users (SIUs), including names, North American Industry Classification System (NAICS), code(s) and addresses, and a list of any SIU deletions and/or additions. The Discharger shall provide a brief explanation for each deletion. The SIU list shall identify the SIUs subject to Federal Categorical Standards by specifying which set(s) of standards are applicable to each SIU. The list shall also indicate which SIUs are subject to local limitations more stringent than Federal Categorical Standards and those, which are not subject to local limits.

d. A list or table characterizing the industrial compliance status of each SIU, including:

(1) SIU name;
(2) Industrial category;
(3) The type (processes) of wastewater treatment in place;
(4) Number of samples taken by the POTW during the year;
(5) Number of samples taken by the SIU during the year;
(6) Whether all needed certifications (if allowed) were provided by SIUs which have limits for total toxic organics;
(7) Federal and Regional Standards violated during the year, reported separately;
(8) Whether the SIU at any time in the year was in Significant Noncompliance (SNC)[16], as defined by 40 CFR 403.12 (f)(2)(vii); and

---

15 *The Discharger is not required to analyze for asbestos.*

16 *SNC is determined at the beginning of each quarter based on data of the previous six months.*

(9) A summary of enforcement actions against the SIU taken during the year, including the type of action, final compliance date, and amount of fines assessed/collected (if any). Proposed actions, if known, should be included.
(10) Number of inspections conducted at each SIU during the year.

e. A compliance summary table which includes:

(1) SIU's which were in SNC at any time during the year;
(2) The total number of SIUs which are in SNC with pretreatment compliance schedules during the year;
(3) The total number of notices of violation and administrative orders issued against SIUs during the year;
(4) The total number of civil and criminal judicial actions filed against SIUs during the year;
(5) The number of SIUs which were published as being in SNC during the year; and
(6) The number of IUs from which penalties were collected during the year.

f. A short description of any significant changes in operating the pretreatment program which differ from the previous year including, but not limited to changes concerning:

(1) The program's administrative structure;
(2) Local industrial discharge limitations;
(3) Monitoring program or monitoring frequencies;
(4) Legal authority or enforcement policy;
(5) Funding mechanisms; and
(6) Resource requirements and/or staffing levels.

g. A summary of the annual pretreatment budget, including the cost of pretreatment program functions and equipment purchases.

h. A summary of public participation activities to involve and inform the public.

i. A description of any changes in sludge disposal methods and a discussion of any concerns not described elsewhere in the report.

3. The cumulative number of industrial users that the Discharger has notified regarding Baseline Monitoring Reports and the cumulative number of industrial user responses.

4. The Discharger shall submit the semiannual compliance status reports and the annual pretreatment report to EPA Region 9, the State Board and the Regional Water Board.

X. REPORTING REQUIREMENTS

A. General Monitoring and Reporting Requirements

1. The Discharger shall comply with all Standard Provisions (Attachment D) related to monitoring, reporting, and recordkeeping.
2. All analytical data shall be reported with method detection limit[17] (MDLs) and with identification of either reporting level or limits of quantitation (LOQs).
3. Any internal quality control data associated with the sample must be reported when requested by the Executive Officer. The Regional Water Board will reject the quantified laboratory data if quality control data is unavailable or unacceptable.
4. Discharge monitoring data shall be submitted in a format acceptable by the Regional Water Board. Specific reporting format may include preprinted forms and/or electronic media. The results of all monitoring required by this Order shall be reported to the Regional Water Board, and shall be submitted in such a format as to allow direct comparison with the limitations and requirements of this Order.
5. The Discharger shall tabulate the monitoring data to clearly illustrate compliance and/or noncompliance with the requirements of the Order.
6. The Discharger shall submit to the Regional Water Board reports necessary to determine compliance with effluent limitations in this Order and shall follow the chemical nomenclature and sequential order of priority pollutant constituents shown in Attachment "G" – Priority Pollutant Lists. The Discharger shall report with each sample result:
   a. The minimum reporting level achieved by the testing laboratory; and
   b. The laboratory's current MDL, as determined by the procedure found in 40 CFR 136.
   c. For receiving water monitoring and for those priority pollutants without effluent limitations, the Discharger shall require its testing laboratory to quantify constituent concentrations to the lowest achievable MDL as determined by the procedure found in 40 CFR 136. In situations where the most stringent applicable receiving water objective, freshwater or human health (consumption of organisms only), as specified for that pollutant in 40 CFR 131.38[18] is below the minimum level value specified in Attachment "H" and the Discharger cannot achieve an MDL value for that pollutant below or equal to the ML value, the Discharger shall submit justification why a lower MDL value cannot be achieved. Justification shall be submitted together with monthly monitoring reports.
7. For every item of monitoring data where the requirements are not met, the monitoring report shall include a statement discussing the reasons for noncompliance, and of the actions undertaken or proposed which will bring the discharge into full compliance with requirements at the earliest time, and an estimate of the date when the Discharger will be in compliance. The Discharger shall notify

---

17 *The standardized test procedure to be used to determine the method detection limit (MDL) is given at Appendix B, 'Definition and Procedure for the Determination of the Method Detection Limit' of 40 CFR 136.*

18 *See Federal Register/ Vol. 65, No. 97 / Thursday, May 18, 2000 / Rules and Regulations.*

the Regional Water Board by letter when compliance with the time schedule has been achieved.

8. The reports for June and December shall include a roster of plant personnel, including job titles, duties, and level of State certification for each individual.

9. At any time during the term of this Order when electronic submittal of monitoring reports has become the norm, the State or Regional Water Board may notify the Discharger to discontinue submittal of hard copies of reports. When such notification is given, the Discharger shall stop submitting hard copies of required monitoring reports.

10. The Discharger shall report monitoring results for specific parameters in accordance with the following table:

Table 9 Reporting Requirements

Parameter	Measurement
Flow	Daily total flow
pH	Daily High and daily low
Total Residual Chlorine	Daily Maximum
Electrical Conductivity	Daily High
Turbidity	Daily maximum

11. The Discharger shall file a written report with the Regional Board within ninety (90) days after the average dry-weather waste flow for any month equals or exceeds 75 percent of the design capacity of the waste treatment and/or disposal facilities. The Discharger's senior administrative officer shall sign a letter which transmits that report and certifies that the policy making body is adequately informed about it. The report shall include:

    a. Average daily flow for the month, the date on which the instantaneous peak flow occurred, the rate of that peak flow, and the total flow for the day.

    b. The Discharger's best estimate of when the average daily dry-weather flow rate will equal or exceed the design capacity of the treatment facilities.

    c. The Discharger's intended schedule for studies, design, and other steps needed to provide additional capacity for the waste treatment and/or disposal facilities before the waste flow rate equals the capacity of present units.

B. Self Monitoring Reports (SMRs)

1. The Discharger shall submit Self-Monitoring Reports (SMRs) electronically using the State Water Board's California Integrated Water Quality System (CIWQS) Program Web site (http://www.waterboards.ca.gov/ciwqs/index.html). The CIWQS Web site will provide additional directions for SMR submittal in the event there will be service interruption for electronic submittal.

2. The Discharger shall report in the SMR the results for all monitoring specified in this MRP. Additionally, the Discharger shall report in the SMR the results of any special studies, acute and chronic toxicity testing, TRE/TIE, PMP, and Pollution Prevention Plan required by Special Provisions – VI.C. of this Order. The Discharger shall submit monthly, quarterly, and annual SMRs including the results of all required monitoring using USEPA-approved test methods or other test methods specified in this Order. If the Discharger monitors any pollutant more frequently than required by this Order, the results of this monitoring shall be included in the calculations and reporting of the data submitted in the SMR

3. Monitoring periods and reporting for all required monitoring shall be completed according to the following schedule:

Table 10 Monitoring Periods and Reporting Schedule

Sampling Frequency	Monitoring Period Begins On...	Monitoring Period	SMR Due Date
Continuous	The effective day of this Order	All	Submit with monthly SMR
Daily	The effective day of this Order	(Midnight through 11:59 PM) or any 24-hour period that reasonably represents a calendar day for purposes of sampling.	Submit with monthly SMR
Weekly	The effective day of this Order	Sunday through Saturday	Submit with monthly SMR
Monthly	First day of calendar month following permit effective date or on permit date if that date is first day of the month	1st day of calendar month through last day of calendar month	first day of the second month following the reporting period, submit as monthly SMR
Quarterly	Closest of January 1, April 1, July 1, or October 1 following permit effective date	January 1 through March 31, samples are colleted in January; April 1 through June 30; samples are colleted in April; July 1 through September 30; samples are colleted in July; October 1 through December 31; samples are colleted in October	first day of the second month following the reporting period, submit with monthly SMR
Semiannually	Closest of January 1 or July 1 following permit effective date	January 1 through June 30 July 1 through December 31	first day of the second month following the reporting period, submit with monthly SMR
Annually	The effective day of this Order	January 1 through December 31	April 1 each year including report requirements in Attachments

4. Reporting Protocols. The Discharger shall report with each sample result the applicable reported Minimum Level (ML) and the current Method Detection Limit (MDL), as determined by the procedure in 40 CFR Part 136.

The Discharger shall report the results of analytical determinations for the presence of chemical constituents in a sample using the following reporting protocols:

a. Sample results greater than or equal to the reported ML shall be reported as measured by the laboratory (i.e., the measured chemical concentration in the sample).

b. Sample results less than the ML, but greater than or equal to the laboratory's MDL, shall be reported as "Detected, but Not Quantified," or DNQ. The estimated chemical concentration of the sample shall also be reported. For the purposes of data collection, the laboratory shall write the estimated chemical concentration next to DNQ as well as the words "Estimated Concentration" (may be shortened to "Est. Conc."). The laboratory may, if such information is available, include numerical estimates of the data quality for the reported result. Numerical estimates of data quality may be percent accuracy (+ a percentage of the reported value), numerical ranges (low to high), or any other means considered appropriate by the laboratory.

c. Sample results less than the laboratory's MDL shall be reported as "Not Detected," or ND.

d. Dischargers are to instruct laboratories to establish calibration standards so that the ML value (or its equivalent if there is differential treatment of samples relative to calibration standards) is the lowest calibration standard. At no time is the Discharger to use analytical data derived from extrapolation beyond the lowest point of the calibration curve.

5. Multiple Sample Data. When determining compliance with an AMEL for priority pollutants and more than one sample result is available in a month, the Discharger shall compute the arithmetic mean unless the data set contains one or more reported determinations of "Detected, but Not Quantified" (DNQ) or "Not Detected" (ND). In those cases, the Discharger shall compute the median in place of the arithmetic mean in accordance with the following procedure:

   a. The data set shall be ranked from low to high, ranking the reported ND determinations lowest, DNQ determinations next, followed by quantified values (if any). The order of the individual ND or DNQ determinations is unimportant.

   b. The median value of the data set shall be determined. If the data set has an odd number of data points, then the median is the middle value. If the data set has an even number of data points, then the median is the average of the two values around the middle unless one or both of the points are ND or DNQ, in which case the median value shall be the lower of the two data points where DNQ is lower than a value and ND is lower than DNQ.

7. The Discharger shall attach a cover letter to the SMR. The information contained in the cover letter shall clearly identify violations of the WDRs; discuss corrective actions taken or planned; and the proposed time schedule for corrective actions.

Identified violations must include a description of the requirement that was violated and a description of the violation.

8. By April 1 of each year, the Discharger shall submit, electronically through CIWQS as an attachment, an annual report to the Regional Water Board. The annual report shall include the following:

   a. Tabular and graphical summaries of the monitoring data obtained during the previous year;

   b. A discussion of the compliance record and the corrective actions taken or planned, which may be needed to bring the discharge into full compliance with the waste discharge requirements;

   c. A summary of the quality assurance (QA) activities for the previous year; and

   d. For priority pollutant constituents that do not have effluent limitations but are required to be monitored, the Discharger shall evaluate the monitoring data obtained during the previous year and determine whether detected constituents are at levels that would warrant reopening the permit to include effluent limitations for such constituent(s). To conduct this evaluation, the concentration of detected constituents shall be compared to the most stringent applicable receiving water objectives (freshwater or human health (consumption of organisms only) as specified for that pollutant in 40 CFR 131.38[19]). The Discharger shall include a discussion of the corrective actions taken or planned to address values above receiving water objectives.

C. Discharge Monitoring Reports (DMRs)

1. The Discharger shall electronically submit DMRs using the State Water Board's California Integrated Water Quality System (CIWQS) Program Web site (http://www.waterboards.ca.gov/ciwqs/index.html). The CIWQS Web site will provide additional directions for SMR submittal in the event there will be service interruption for electronic submittal.

D. Other Reports

1. The Discharger shall report the results of any special studies, acute and chronic toxicity testing, TRE/TIE, PMP, and Pollution Prevention Plan required by Special Provisions – VI.C. of this Order. The Discharger shall report the progress in satisfaction of compliance schedule dates specified in Special Provisions – VI.C.7 of this Order. The Discharger shall submit reports with the first monthly SMR scheduled to be submitted on or immediately following the report due date in compliance with SMR reporting requirements described in subsection X.B.5 above.

---

19 *See Federal Register/ Vol. 65, No. 97 / Thursday, May 18, 2000 / Rules and Regulations.*

ATTACHMENT F – FACT SHEET

Table of Contents

I. Permit Information F-4
II. Facility Description F-6
A. Description of Wastewater and Biosolids Treatment or Controls F-6
B. Discharge Points and Receiving Waters F-12
C. Summary of Existing Requirements and Self-Monitoring Report (SMR) Data F-13
D. Compliance Summary F-14
E. Planned Changes F-16
III. Applicable Plans, Policies, and Regulations F-16
A. Legal Authorities F-16
B. California Environmental Quality Act (CEQA) F-17
C. State and Federal Regulations, Policies, and Plans F-17
D. Impaired Water Bodies on CWA 303(d) List F-21
E. TMDLs F-21
F. Other Plans, Polices and Regulations F-23
G. Rattlesnake, Syphon, and Sand Canyon Reservoirs F-24
IV. Rationale For Effluent Limitations and Discharge Specifications F-24
A. Discharge Prohibitions F-24
B. Technology-Based Effluent Limitations F-24
1. Scope and Authority F-24
C. Water Quality-Based Effluent Limitations (WQBELs) for DPs 003, 004, & 007 ..... F-25
1. Scope and Authority F-25
2. Applicable Beneficial Uses and Water Quality Criteria and Objectives F-25
3. Determining the Need for WQBELs F-27
4. WQBEL Calculations – Not Applicable F-31
5. Whole Effluent Toxicity (WET) F-31
D. Best Professional Judgment-Based Effluent Specif. for DPs 003, 004, & 007 ..... F-31
E. Summary of Final Effluent Limitations for DPs 003, 004, & 007 ..... F-32
1. Satisfaction of Anti-Backsliding Requirements F-32
2. Satisfaction of Antidegradation Policy F-32
3. Stringency of Requirements for Individual Pollutants F-33
4. Summary of Final Effluent Limitations for DPs 003, 004, & 007: F-33
F. Interim Effluent Limitations – Not Applicable F-34
G. Land Discharge Specifications – Not Applicable F-34

H. Reclamation Specifications – DPs 001, 002, & 008 ..... F-34
I. Groundwater Dewatering Requirements – Not Applicable F-35
J. Storm Water Discharge Requirements – Storm-007 & Storm-008 ..... F-35
V. Rationale for Receiving Water Limitations F-35
A. Surface Water F-36
B. Groundwater F-36
VI. Rationale for Monitoring and Reporting Requirements F-36
A. Influent Monitoring F-36
B. Effluent Monitoring F-36
C. Whole Effluent Toxicity Testing Requirements F-37
D. Receiving Water Monitoring F-38
1. Surface Water F-38
2. Groundwater - Not Applicable F-38
E. Other Monitoring Requirements F-38
VII. Rationale for Provisions F-38
A. Standard Provisions F-38
B. Special Provisions F-39
1. Reopener Provisions F-39
2. Special Studies and Additional Monitoring Requirements F-39
3. Best Management Practices and Pollution Prevention F-39
4. Construction, Operation, and Maintenance Specifications F-40
5. Special Provisions for Municipal Facilities (POTWs Only) F-40
6. Other Special Provisions – Not Applicable F-41
7. Compliance Schedules – Not Applicable F-41
VIII. Public Participation F-41
A. Notification of Interested Parties F-41
B. Written Comments F-41
C. Public Hearing F-42
D. Waste Discharge Requirements Petitions F-42
E. Information and Copying F-42
F. Register of Interested Persons F-42
G. Additional Information F-43

List of Tables

Table 1. Facility Information F-4
Table 2. Facilities' Treatment Processes F-8
Table 3. Recycled Water Produced F-9
Table 4. Closed Tanks F-10
Table 5. Open Reservoirs F-10
Table 6. Treated Water Sent to OCWD and OCSD F-11
Table 7. Summary of Discharge Points and Receiving Waters F-12
Table 8. Historic Effluent Monitoring Data at DPs 003, 004 and 007 ..... F-13
Table 9. Compliance Summary F-14
Table 10. Basin Plan Beneficial Uses F-18
Table 11. Applicable Basin Plan Surface Water Quality Objectives F-26
Table 12. TDS/ Ammonia-Nitrogen Limits F-27
Table 13. MWRP Effluent Monitoring Data, µg/L F-30
Table 14. RPA Evaluation for DPs 003, 004, & 007 ..... F-30
Table 15. Tertiary Effluent BOD_5 and TSS Limits F-31
Table 16. Summary of Water Quality-based Final Effluent Limitations for Discharge Points 003, 004, & 007 ..... F-33
Table 17. Stormwater Discharge Limits at Storm-007 & Storm-008 ..... F-35

ATTACHMENT F – FACT SHEET

As described in section II of this Order, this Fact Sheet includes the legal requirements and technical rationale that serve as the basis for the requirements of this Order.

This Order has been prepared under a standardized format to accommodate a broad range of discharge requirements for Dischargers in California. Only those sections or subsections of this Order that are specifically identified as "not applicable" have been determined not to apply to this Discharger. Sections or subsections of this Order not specifically identified as "not applicable" are fully applicable to this Discharger.

I. PERMIT INFORMATION

The following table summarizes administrative information related to the facilities.

Table 1. Facility Information

WDID	8 302006002	
Discharger/Operator	Irvine Ranch Water District	
Names of Facilities	Michelson Water Recycling Plant	Los Alisos Water Recycling Plant
Addresses	3512 Michelson Drive	22312 Muirlands Boulevard
	Irvine, CA 92612	Lake Forest, CA 92630
	Orange County	
Facility Contact, Title and Phone	Randy C. Lee, Assistant Director of Recycling Operations, Phone: (949) 453-5780	
Authorized Person to Sign and Submit Reports	Patrick Sheilds, Executive Director of Operations, Phone: (949) 453-5720	
Mailing Address	15600 Sand Canyon Avenue, Irvine, CA 92618	
Billing Address	P.O. BOX 57000, Irvine, CA 92619-7000	
Type of Facility	POTW	
Major or Minor Facility	Major	
Threat to Water Quality	1	
Complexity	A	
Pretreatment Program	Y	
Reclamation Requirements	Producer/User	
Facility Permitted Flow	28 million gallons per day (mgd)	7.5 mgd - secondary treatment and 5.5 mgd – tertiary treatment
Type of Permitted Flows	NPDES	WDR (Recycled Water only)
Facility Design Flow	28 mgd	7.5 mgd - secondary treatment and 5.5 mgd – tertiary treatment
Watershed	San Diego Creek/Newport Bay watershed	San Diego Creek/Newport Bay watershed
Receiving Water	Irvine Groundwater Management Zone. Surface waters: Rattlesnake, Syphon, and Sand Canyon Reservoirs, Reach 1 of San Diego Creek, San Joaquin Freshwater Marsh and Upper Newport Bay.	
Receiving Water Type	Inland Surface Water, Estuary and Groundwater	

A. The Irvine Ranch Water District (hereinafter Discharger or IRWD) is the owner and operator of a sanitary sewer system, the Michelson Water Recycling Plant and Los Alisos Water Recycling Plant (hereinafter the Facilities, or MWRP and LAWRP respectively,) and a recycled water distribution system.

For the purposes of this Order, references to the "discharger" or "permittee" in applicable federal and State laws, regulations, plans, or policy are held to be equivalent to references to the Discharger herein.

B. The MWRP discharges wastewater to waters of the United States, including: 1) tertiary treated recycled water to Sand Canyon Reservoir, Syphon Reservoir, and Rattlesnake Reservoir; 2) emergency pumped storm water to Reach 1 of San Diego Creek and San Joaquin Freshwater Marsh, which are tributaries of Upper Newport Bay. The discharge from MWRP is currently regulated by Order No. R8-2007-0003, which was adopted on November 30, 2007 and expired on November 1, 2012. Order No. R8-2007-0003 was amended by Order No. R8-2008-0072 on September 5, 2008. The amendment corrected the discharge prohibition period of Sand Canyon Reservoir, modified reclamation specifications, and provided flexibility to demonstrate compliance at monitoring location REC-001 for other discharge points. Also, on June 15, 2012 Order No. R8-2007-0003 was amended by Order No. R8-2012-0004, which added Syphon Reservoir as an additional discharge point for recycled water storage in the distribution system. The terms and conditions of the current Order and its amendment have been automatically continued and remain in effect until new Waste Discharge and Water Reclamation Requirements and NPDES permit are adopted pursuant to this Order.

The LAWRP discharges tertiary treated and disinfected recycled water to its recycled water distribution system within the Lake Forest service area and/or to IRWD's Zone B. When discharging to IRWD's Zone B the recycled water is not discharged to IRWD's open reservoirs that are waters of the US. On the other hand, recycled water produced at MWRP may be received at LAWRP recycled water pump station's wetwell, on a seasonal basis, for distribution within the Lake Forest service area of LAWRP. The recycled water discharge from this facility is currently regulated under Order No. 94-3 issued to the South Orange County Reclamation Authority (SOCRA) by this Regional Water Board on March 11, 1994. SOCRA changed its name in 2001 to the South Orange County Wastewater Authority (SOCWA). Also, Order No. 94-3 regulates recycled water discharges from El Toro Water District's Water Recycling Plant. Both IRWD and El Toro Water District are members of SOCWA. When recycled water from MWRP is received at LAWRP or when a portion of its secondary treated effluent is not reclaimed, LAWRP's undisinfected secondary effluent is discharged to the Pacific Ocean through the Aliso Creek ocean outfall operated by SOCWA. The discharge to the Pacific Ocean is regulated by the San Diego Regional Water Quality Control Board through Order No. R9-2012-0013 issued to SOCWA.

C. The Discharger filed a report of waste discharge and submitted an application for renewal of its Waste Discharge Requirements (WDRs) and National Pollutant Discharge Elimination System (NPDES) permit for MWRP on April 6, 2012. Additional information

was provided through January 29, 2014. Also, IRWD agreed to consolidate the regulation of the discharges from the Facilities into one permit and obtained coverage for the groundwater dewatering discharges from the MWRP under Order R8-2007-0041 (NPDES No. CAG918002). MWRP was inspected on February 12, 2015 and the LAWRP was inspected on December 9, 2014, to observe operations and collect additional data to develop permit limitations and conditions.

On June 17, 2009, SOCWA filed a report of waste discharge and submitted an application for renewal of its WDRs Order No. 94-3. SOCWA's application for WDRs renewal was triggered by several events, which include the following: 1) the South Orange County Reclamation Authority changed its name to the South Orange County Wastewater Authority; 2) Los Alisos Water District became part of IRWD; 3) LAWRP expanded its recycled water production capacity to 7.1 mgd; and 4) IRWD built an interconnection between MWRP's recycled water distribution system and LAWRP's recycled water distribution system.

Based on the acquisition of Los Alisos Water District and its recycled water treatment plant (LAWRP) by IRWD, the interconnection of the recycled water systems of the Facilities, and the tertiary treatment and disinfection upgrade built by El Toro Water District, Regional Water Board staff decided not to renew WDRs for SOCWA and consolidate the IRWD's Facilities under one permit and issue a separate WDRs for El Toro Water District. SOCWA does not own any of the regulated Facilities and their recycled water distribution systems. SOCWA owns the transmission main used by IRWD's LAWRP and El Toro Water District's Water Recycling Plant to discharge secondary effluent to the Pacific Ocean. The ocean discharge of secondary treated effluent from LAWRP and El Toro Water District is regulated by the San Diego Regional Water Quality Control Board under Order No. R9-2012-0013.

II. FACILITY DESCRIPTION

A. Description of Wastewater and Biosolids Treatment or Controls

1. Facility Background

a. MWRP wastewater treatment

This Facility is a publicly owned treatment works with preliminary, primary, secondary, and tertiary treatment capacity of 28 million gallons per day (mgd). The plant phase II expansion project added 10 mgd of treatment capacity to the existing 18 mgd capacity for a total of 28 mgd. The phase II expansion project includes new headworks, preliminary treatment, primary clarifiers, a 10.6-mgd capacity membrane bio-reactor, and 21-mgd UV disinfection system. Also, the membrane bio-reactor was built with structural flexibility for the future addition of a 5-mgd capacity treatment module for an ultimate total treatment capacity expansion of 33 mgd (plant phase III expansion project). The Facility is located at 3512 Michelson Drive, Irvine, Orange County. This Facility treats residential, commercial, and industrial wastes from areas within central Orange County, which includes the City of Irvine, portions

of the Cities of Tustin, Santa Ana, Orange, Costa Mesa, and Newport Beach, and parts of unincorporated Orange County areas. Total population served is about 331,500.

MWRP receives sewage from three main sewer trunk lines: the North Irvine Interceptor; the South Irvine interceptor; and the Harvard Avenue Trunk sewer (HATS). Flow from HATS is diverted in to the North Irvine Interceptor before reaching the MWRP through a new pump station that was built in 2008 and a small percent of sewage not captured by HATS is sent to the Orange County Sanitation District (OCSD) for treatment.

The North Irvine Interceptor serves the Cities of Irvine, Foothill Ranch and portions of Tustin, and provides the majority of the sewage to the treatment plant. IRWD has the ability to bypass all or part of the sewage to OCSD through OCSD's Main Street trunk sewer. Sewage entering the IRWD treatment plant from the north and from HATS can be diverted directly into the Main Street trunk sewer. All sewage solids are pumped from the treatment plant up to the Main Street trunk sewer.

The South Irvine sewer trunk line serves the University of California, and part of the cities of Irvine and Newport Beach. There is no diversion capacity on this sewer. However, should the need arise; all of this sewage can be diverted to OCSD for treatment and disposal by bringing the flow in to the plant and, then, pumping it to the Main Street sewer through the MWRP sludge line. As a member of OCSD, IRWD can utilize treatment and disposal at OCSD facilities in Fountain Valley.

In January 1986, the Discharger joined the Orange County Sanitation District (OCSD) to dispose of untreated sewage generated within the Discharger's service area when it is not needed for recycling. In February of 1987, the Discharger and OCSD entered into a memorandum of understanding (MOU) governing the administration of the Discharger's industrial pretreatment program. The MOU brought industries considered as Class I industries by the IRWD's sewage discharge regulations/ordinance under a joint IRWD/OCSD Class I permit, which is administered by OCSD's ordinance. The MOU also preserves the independent authority and responsibilities of both agencies, thereby allowing the Discharger to operate its pretreatment program for the MWRP in compliance with Federal and state pretreatment regulations. This Order requires the Discharger to update, as necessary, its MOU with OCSD.

By agreement with OCSD, the Discharger acquired a capacity right of 32 mgd for the delivery, treatment, and disposal of raw sewage to OCSD treatment facilities. During periods of low demand for recycled water, sewage that is not needed for recycling is diverted to OCSD Plant #1 for treatment and disposal to the Pacific Ocean.

Order No. R8-2007-0003 prohibited the direct discharge of tertiary treated recycled water to surface waters, except for the three reservoirs, Rattlesnake, Syphon, and Sand Canyon. During dry weather, when the recycled water demand is high, the

Discharger treats all the sewage generated within its service area and delivers all produced recycled water to its users.

b. Groundwater Dewatering.

The MWRP is located adjacent to the San Joaquin Freshwater Marsh and San Diego Creek. The groundwater elevation at the Facility site is high. Consequently, dewatering of the shallow groundwater zone is necessary to protect in-ground facilities. The area is dewatered through a network of shallow zone wells with two separate discharge points, either into Reach 1 of San Diego Creek or into the San Joaquin Freshwater Marsh. This Order does not regulate the discharges from the groundwater dewatering activities as the past order did. The Regional Water Board regulates the groundwater dewatering discharge from MWRP under the General Discharge Permit for Discharges to Surface Waters of Groundwater Resulting from Groundwater Dewatering Operations and/or Groundwater Cleanup Activities at Sites within the San Diego Creek/Newport Bay Watershed Polluted by Petroleum Hydrocarbons, Solvents, Metals and/or Salts, Order No. R8-2007-0041 (NPDES No. CAG918002). Also, Regional Water Board issued Time Schedule Order No. R8-2009-0069 (TSO), as amended by Order No. R8-2013-0060, to allow dischargers, enrolled under Order No. R8-2007-0041, additional time to comply with the numeric effluent limitations for selenium. IRWD has enrolled under Order No. R8-2007-0041.

c. LAWRP wastewater treatment.

This Facility is a publicly owned treatment works with preliminary, secondary, tertiary, and chlorine disinfection treatments. The rated tertiary and disinfection treatment capacity for this Facility is 5.5 mgd and its secondary treatment capacity is 7.5 mgd. The Facility is located at 22312 Muirlands Boulevard, Lake Forest, Orange County and treats residential and commercial wastes from within the Lake Forest area of Orange County. LAWRP receives wastewater through two trunk lines and serves a total population of about 40,700.

2. Design Characteristics

The Facilities consists of the following treatment processes:

Table 2. Facilities' Treatment Processes

Preliminary Treatment	Primary Treatment	Secondary Treatment	Tertiary Treatment
		MWRP	
Perforated Plate screens and Vortex-type grit chambers	Primary clarifiers, flow equalization basins	Activated sludge (AS) process operated in nitrification/denitrification mode and may use methanol augmentation in the anoxic zone at the head of each aeration basin followed by secondary clarification. Membrane bioreactor (MBR) process with nutrient removal operated as separate treatment train	Addition of Alum prior to filtration and high rate clarification. Conventional down flow dual media filters, disinfection by chlorination. Potassium hydroxide pH adjustment capability is provided to regulate pH as needed. Microfiltration membrane technology that is part of the MBR treatment train followed by UV

		in parallel with AS process.	disinfection.
LAWRP			
Passive grit chamber and coarse stair mechanical screens	Not applicable	Aerated lagoons and sedimentation basins with dredging equipment for sludge removal	Flash mixer, flocculation basins, sedimentation basins, and filtration with conventional downward flow dual-media filters. Chlorination for disinfection in chlorine contact basin.

The tertiary treatment design capacity of MWRP and LAWRP is 28 mgd and 5.5 mgd respectively. Recycled water flows at MWRP and LAWRP for the last three years are listed below:

Table 3. Recycled Water Produced

Plant	MWRP		LAWRP	
Year	**Design Capacity, MGD**	**Produced, Annual Average Daily Flow, MGD**	**Design Capacity (recycled water), MGD**	**Produced, Annual Average Daily Flow, MGD**
2012	18	17.4	5.5	2.8
2013	18	17.8	5.5	3.8
2014	28	18.3	5.5	3.3

Attachment B provides a map of the area around these Facilities
Attachment C provides a treatment flow schematic for these Facilities.

3. Biosolids/Sludge Handling Practices

At MWRP, sludge and scum are collected and pumped into an OCSD sewer line, then to OCSD's Reclamation Plant No. 1 for treatment and disposal. LAWRP sludge is dewatered onsite and hauled away for disposal to a compost facility in Arizona or to a local landfill in Orange County. Screenings and grit are removed and disposed of at a Class 1 landfill. IRWD is implementing a Biosolids Handling and Energy Recovery Facility Project at the MWRP site, which is in the construction phase and would treat solids from both Facilities, and includes the construction and/or installation of sludge thickening equipment, anaerobic digesters, centrifuges for sludge dewatering, sludge drying equipment, anaerobically digestable material receiving station, and microturbines for generation of electricity and heat. The microturbines would operate with biogas produced in the anaerobic digesters. IRWD anticipates completion of the Biosolids Handling and Energy Recovery Facility by the end of 2016.

4. Recycled Water Reuse and Other Water Sources

Recycled Water Storage. The Discharger uses a combination of closed storage tanks and open storage reservoirs to satisfy the demand for recycled water. The designations and capacities of the closed storage tanks are shown below:

Table 4. Closed Tanks

Tanks Name	Volume in Million Gallons (MG)
Zone A North	5
Zone A South	10
Irvine Industrial Complex East Zone B	5
Coast Zone G	2.5
Coast Zone D	5

The open reservoirs hold the greatest capacity and are the primary mechanism for seasonal storage of recycled water. The capacities and designations of the open storage reservoirs are shown below:

Table 5. Open Reservoirs

Reservoir	Capacity, MG	Designation
Sand Canyon	250	Water of US
Rattlesnake	359	Water of US
Syphon	180	Water of US
San Joaquin	954	Restricted Impoundment

On December 20, 2004, the Regional Water Board adopted Order No. R8-2004-0107 to add the San Joaquin Reservoir to the MWRP's waste discharge requirements for storage of recycled water as part of the recycled water system. San Joaquin Reservoir was converted from a treated domestic water storage reservoir to a recycled water reservoir. As a treated domestic water reservoir, San Joaquin Reservoir excluded any surface water from entering the reservoir and was essentially a restricted access impoundment. IRWD has maintained the reservoir design features that divert all surface water around the reservoir.

Recycled Water Uses. Recycled water is currently being used for all categories of reuse defined in Title 22, with the exception of indirect and direct potable water reuse. Recycled water is either directly delivered to customers through 485 miles of pipes or discharged to dedicated recycled water storage reservoirs prior to reuse. Currently, during dry season, all treated wastewater is used in a wide variety of ways, including crop and landscape irrigation, industrial process water, wetlands, cooling towers, car wash supply, toilet flushing in high rise commercial buildings and community facilities, decorative fountains, and sanitary landfill dust control and soil compaction activities.

In the fall of 1997, OCSD, the City of Newport Beach, and the Discharger completed an 8 mgd recycled water pipeline, the Green Acres Project (GAP) II pipeline. This pipeline connected the Discharger's recycled water distribution system to the Orange County Water District's (OCWD's) GAP system to provide up to 4.2 mgd of recycled water for irrigation, and up to 3.8 mgd recycled water disposal directly into the OCSD's ocean outfall. In the future, IRWD plans to furnish the excess recycled water to OCWD's Groundwater Replenishment System during the rainy season. Treated wastewater delivery during the last three years to OCWD's GAP and to the OCSD outfall is listed below:

Table 6. Treated Water Sent to OCWD and OCSD

Year	OCWD GAP, Total MGY[1]	OCSD Outfall[2], MGY
2012	422	0
2013	313	124
2014	0	0

1. Flow was intermittent, unit in million gallons per year (MGY).
2. OCSD outfall is used only when the supply of recycled water exceeds the IRWD system demands.

Other Water Sources of Recycled Water: MWRP is not the only source of water supplies to IRWD's recycled water system. While the MWRP tertiary effluent is the largest source of recycled water, IRWD utilizes other sources of recycled water and non-potable water to augment its supply for recycled water uses.

In the upper reaches of the recycled water system, IRWD supplements the recycled water supply with unfiltered water from Irvine Lake. Irvine Lake gets most of its water from the Colorado River and local runoff. This water is chlorinated and can be pumped directly into Rattlesnake Reservoir.

Groundwater wells within the Irvine management zone are used to supplement the supply of water in the recycled water system, including wells that are part of groundwater cleanup activities within the former EL Toro Marine Corps Air Station. These wells intercept groundwater contaminated with small amounts of trichloroethylene (TCE). The water is treated by stripping the TCE and is pumped into the recycled water distribution system.

5. Irvine Desalter Project

In the fourth quarter of 2006, IRWD completed the construction of the Irvine Desalter Project's Potable Treatment Plant (PTP), Shallow Ground Water Unit Treatment Plant (SGU), and the South Irvine Brine Line (SIBL). The PTP treats groundwater through reverse osmosis and the SGU treats groundwater impacted with volatile organic compounds using air-stripping technology. Both plants became operational in January 2007. The PTP brine and high TDS treated SGU water are exported

through the SIBL and discharged to the Pacific Ocean via the Aliso Creek Ocean Outfall (ACOO). Discharges from the Aliso Creek Ocean outfall is regulated by the San Diego Regional Water Quality Control Board under Order No. R9-2012-0013 . The product water from the treatment facilities is used to augment the water supply to IRWD's service areas.

B. Discharge Points and Receiving Waters

1. Discharge Point for Recycling Water Reuse

Recycled water is delivered via DP-001 and DP-008 to the distribution system serving recycled water users.

Recycled water produced at MWRP is delivered via DP-002 to San Joaquin Reservoir for storage.

Tertiary treated recycled water produced at MWRP is dechlorinated and discharged to surface waters at three points located at Rattlesnake Reservoir, Sand Canyon Reservoir, and Syphon Reservoir, designated as DP-003, DP-004, and DP-007, respectively. Tertiary treated recycled water produced at LAWRP and discharged through DP-008 is not discharged to the reservoirs that are filled with recycled water produced at MWRP.

2. Stormwater Discharge points

Stormwater from MWRP is channeled into an onsite long term storage pond, from which it is pumped to the treatment plant for treatment. However, during heavy storms, the stormwater may be discharged to surface waters. This Order designates two stormwater discharge points as Storm-007 and Storm-008.

3. Recycled water use area and reservoirs overly the Irvine Groundwater Management Zone.

Table 7. Summary of Discharge Points and Receiving Waters

Discharge Serial No.	Latitude	Longitude	Description and Receiving Waters	Flow & Frequency
001	33°39'50"N	117°50'17"W	Recycled water from MWRP to distribution system serving recycled water users	12.3 mgd Continuous
002	33°37'12"N	117°50'39"W	Recycled water from MWRP to San Joaquin Reservoir, overlying Irvine GMZ	Variable up to 12.3 mgd
003	33°43'37"N	117°44'27"W	Tertiary treated effluent from MWRP to Rattlesnake Reservoir, overlying Irvine GMZ	Variable up to 12.3 mgd
004	33°38'55"N	117°47'47"W	Tertiary treated effluent from MWRP to Sand Canyon Reservoir, overlying Irvine GMZ	Variable up to 12.3 mgd
007	33°42'36"N	117°43'56"W	Tertiary treated effluent from MWRP to Syphon Reservoir, overlying Irvine GMZ	Variable up to 12.3 mgd
008	33°38'16"N	117°42'50"W	Recycled water from LAWRP to distribution system serving recycled water users	Variable up to 5.5 mgd

Table 7. Summary of Discharge Points and Receiving Waters

Discharge Serial No.	Latitude	Longitude	Description and Receiving Waters	Flow & Frequency
Storm-007	33°39'47"N	117°42'50"W	Pumped stormwater (emergency) from MWRP to San Diego Creek Reach 1 tributary to Upper Newport Bay	Unmetered
Storm-008	33°39'51"N	117°50'27"W	Pumped stormwater (emergency) from MWRP to San Joaquin Freshwater Marsh tributary to Upper Newport Bay	Unmetered

C. Summary of Existing Requirements and Self-Monitoring Report (SMR) Data

1. Effluent limitations/Discharge Specifications contained in the previous order, Order No. R8-2007-0003, for discharges to Rattlesnake, Syphon, and Sand Canyon reservoirs and representative monitoring data are as follows:

Table 8. Historic Effluent Monitoring Data at DPs 003, 004 and 007

Parameter (units)	Effluent Limitation*			Monitoring Data (From 11/2008 – To – 12/2014)			
	Average Monthly	Average Weekly	Maximum Daily	Highest Average Monthly Discharge	Highest Average Weekly Discharge	Highest Daily Discharge	Highest 12-Month Average
pH (SU)			6.5-8.5			within pH range	
Chlorine Residual (mg/L)			0.1, IMAX			1.4	
BOD5 (mg/L)	20	30		5	10		
Suspended Solids (mg/L)	20	30		7.1	15		
Coliform Organisms (MPN/100 mL)	>23 not more than twice per month	<2.2 7-day median	<240	49	7.8	49	
Ammonia-Nitrogen (mg/L)	1.5					1.6	
Turbidity, NTU		Avg Daily, 2	Inst. Max, 10		2	9.8	
TDS (mg/L)	12-M, 720						866
Total Hardness (mg/L)							165 (minimum value)
N-Nitrosodimethylamine (µg/L)						6.3	
Selenium (µg/L)						4.3	
Copper (µg/L)	12		23			12.6	
Cyanide, (µg/L)						14.0	

Table 8. Historic Effluent Monitoring Data at DPs 003, 004 and 007

Parameter (units)	Effluent Limitation*			Monitoring Data (From 11/2008 – To – 12/2014)			
	Average Monthly	Average Weekly	Maximum Daily	Highest Average Monthly Discharge	Highest Average Weekly Discharge	Highest Daily Discharge	Highest 12-Month Average
Mercury (µg/L)	0.051		0.102			0.044	
Dichlorobromomethane (µg/L)						54	
Bis(2-ethylhexyl) phthalate (µg/L)						3.0	
Acrolein (µg/L)						2.3	
Acrylonitrile						0.38	

*: Effluent limitations set forth by Order No. R8-2007-0003 (NPDES No. CA8000326). Interim effluent limitation for copper was 36 µg/L until March 2009 for both monthly average and maximum daily limits.

The previous Order prohibited the direct discharge of tertiary treated recycled water to surface water, except into the three reservoirs, Rattlesnake Reservoir, Syphon Reservoir, and Sand Canyon Reservoir. However, during wet weather conditions, storm water runoff from the reservoir watershed occasionally causes overflows[1] from Sand Canyon Reservoir into San Diego Creek. The previous Order R8-2007-0003 allowed emergency discharge of water from the reservoir during heavy rainfall events. The Discharger has implemented best management practices to minimize overflows from Sand Canyon Reservoir by limiting recycled water storage during the rainy season. During the term of Order No. R8-2007-0003, Sand Canyon Reservoir has overflowed twice in 2010 and 2011 during the rainy season. This Order permits overflows from Sand Canyon Reservoir under certain storm conditions when the flow in San Diego Creek at Campus Drive is expected to be 50 cubic feet per second or higher. Under such flow conditions, the discharge should have no impact on nutrient loading to San Diego Creek or Newport Bay. The Discharger has to implement nitrogen offset programs if the discharge occurs when the flow in San Diego Creek at Campus Drive is less than 50 cubic feet per second.

D. Compliance Summary

Based on a review of effluent monitoring data submitted by the Discharger for the December 2007 through December 2014 monitoring periods, it was determined that the recycled water discharged from the MWRP was in violation of the following effluent limitations:

Table 9. Compliance Summary

1 *Rattlesnake and Syphon Reservoirs are not expected to overflow during the life of this Order.*

Date	Parameter	Value	Permit Limit	Reason for Violation	Corrective Measures
Sporadic brief episodes between 2008 and 2009. Isolated episode on June 2011, September 2012, and January and February 2013.	Chlorine residual	1.4 mg/L	0.1 mg/L	No dechlorination (before 2010) or low dechlorination chemical dosage	Installed dechlorination system at Rattlesnake and Sand Canyon Reservoirs in 2010. Replenished dechlorinating chemical at Highline Canal dechlorination station located near Syphon Reservoir. Adjusted dechlorination dosage accordingly.
Isolated hourly timed incursions through the years with a maximum occurrence of 23 incursions in 2012. Also, 7 incursions in 2013.	CT	<450 mg-min/L	450 mg-min/L	High Chlorine demand, dosage pump failure, bleach dosage set point too low	Increased bleach dosage, restarted bleach dosage pump or start backup pump, recalibrated on-line meter for chlorine, and adjusted set point accordingly. The MWRP was expanded to 28 mgd to solve overloading and ammonia breakthrough issues. Started operating the 10-mgd treatment expansion at the end of 2013 and no CT exceedances have occurred since MBR began operations.
Intermittent exceedances between 2008 and 2010 and only one exceedance between 2011 and Oct-2013	Chronic Toxicity	> 1.0 TUc	1.0 TUc	Overdosing dechlorination chemical to effluent samples	Adopted new chlorine residual concentration analysis method to avoid overestimating concentration and overdosing dechlorination chemical to samples collected for chronic toxicity testing, which might be triggering the chronic toxicity exceedances.
January and February 2008 at M-003A and March and April 2008 at M-004A	Cu	65.9 µg/L maximum concentration at M-003A and 137 µg/L maximum concentration at M-004A	36/36 µg/L Interim monthly average and daily maximum limits*	Installed a brass sampling port and appurtenances at M-003A and M-004A	Exceedances ceased within two months after the installation of the new sampling port at each monitoring location and have not occurred since then. The monthly average influent Cu concentration during 2008 was 66 µg/L and the maximum daily influent Cu concentration was 81.4 µg/L, which is much lower than the maximum concentration detected at M-003A and M-004A. Also, the highest concentration detected at REC-001 in 2008 was 13.2 µg/L (recycled water sampling point at MWRP).
August 2008	Hg	0.210 µg/L	0.2 µg/L interim daily maximum limit*	Not acknowledged by the discharger	No explanation was given by discharger. Discharger might have rounded down the value to the nearest tenth. Only one violation of the limits for Hg during the last permit term.

Table 9. Compliance Summary

Date	Parameter	Value	Permit Limit	Reason for Violation	Corrective Measures
May through August 2011 at M-003A	TDS	> 720 mg/L	720 mg/L 12-M average	Temporary spike in salinity in source water and sewer service area	Developed and implemented salinity management plan. Also, requested Regional Water Board to revise TDS objective in the amended Basin Plan (for DP-003 and DP-004; surface waters) to 910 mg/L to reflect the objective of the Irvine Groundwater Management Zone.

*: Interim effluent limitations set forth by Order No. R8-2007-0003 (NPDES No. CA8000326) and were effective until March 2009. .

E. Planned Changes

In 2005, IRWD prepared an Environmental Impact Report for the Michelson Water Reclamation Plant's ultimate expansion to 33 mgd and related process changes. The comment period for this EIR closed on December 28, 2005. Final Design began in mid-2006 and completed in early 2008. Construction was completed on the phase II treatment expansion in 2013 and full operation of the treatment expansion started in early 2014. The construction schedule for the phase III treatment expansion, which would add 5-mgd treatment capacity, is uncertain.

IRWD is constructing a Biosolids Handling and Energy Recovery Facility at the MWRP site, which would treat wastes from both Facilities, and includes the construction and/or installation of sludge thickening equipment, anaerobic digesters, centrifuges for sludge dewatering, sludge drying equipment, anaerobically digestable material receiving station, and microturbines for generation of electricity and heat. The microturbines would operate with biogas produced in the anaerobic digesters. IRWD anticipates completion of the Biosolids Handling and Energy Recovery Facility by the end of 2016.

III. APPLICABLE PLANS, POLICIES, AND REGULATIONS

The requirements contained in the proposed Order are based on the requirements and authorities described in this section.

A. Legal Authorities

This Order is issued pursuant to section 402 of the federal Clean Water Act (CWA) and implementing regulations adopted by the U.S. Environmental Protection Agency (USEPA) and Chapter 5.5, Division 7 of the California Water Code (commencing with Section 13370). It shall serve as a NPDES permit for point source discharges from this Facility to surface waters. This Order also serves as Waste Discharge Requirements (WDRs) pursuant to article 4, Chapter 4, Division 7 of the Water Code (commencing

with Section 13260) and as a master reclamation permit pursuant to Section 13523.1 of Article 4, Chapter 7, Division 7 of the California Water Code. This Order, as a master reclamation permit, includes Producer/User Reclamation Requirements to regulate recycled water use for irrigation and other industrial uses.

B. California Environmental Quality Act (CEQA)

Under Water Code section 13389, this action to adopt an NPDES permit is exempt from the provisions of CEQA, Public Resources Code section 21000 et seq. (*County of Los Angeles v. California State Water Resources Control Board* (2006) 143 Cal.App.4th 985, mod. (Nov. 6, 2006, B184034) 50 Cal.Rptr.3d 619, 632-636.) For the plant expansion project, a mitigated negative declaration and addendum was adopted on July 2, 2003 and October 5, 2005, respectively. This action also involves the re-issuance of waste discharge requirements for an existing facility that discharges treated wastewater to land and as such, is exempt from the provisions of California Environmental Quality Act (commencing with Section 21100) in that the activity is exempt pursuant to Title 14 of the California Code of Regulations Section 15301". MWRP has completed the capacity expansion project Environmental Impact Report, SCH 2005051174 on December 28, 2005. The EIR was certified on February 27, 2006. The CEQA documents for discharge location DP-007, Syphon Reservoir, were completed on December 10, 2009 and a negative declaration was certified on December 14, 2009. The Final Supplemental Environmental Impact Report (SEIR) No. 1 for the MWRP Phase 2 and 3 Capacity Expansion Project, Biosolids Handling Component, SCH 2011031091, was certified on October 23, 2012. The SEIR No. 1 covered the CEQA process for the Biosolids Handling and Energy Recovery Facility and includes the mitigation of potential odor sources with an adequate odor control system, monitoring for presence of endangered species and/or installation of noise control measures during nesting season, and considers measures to protect human health and safety during construction. Regional Board staff has reviewed the CEQA documents related these projects and finds that if the Discharger complies with the requirements specified in this Order, it should not have any significant impact on the water quality of the receiving water bodies.

C. State and Federal Regulations, Policies, and Plans

1. **Water Quality Control Plans.** The Regional Water Board adopted an updated Water Quality Control Plan for the Santa Ana Basin (hereinafter Basin Plan) that became effective on January 24, 1995. The Basin Plan designates beneficial uses, establishes water quality objectives, and contains implementation programs and policies to achieve those objectives for all waters addressed through the plan. In addition, State Water Resources Control Board (State Water Board) Resolution No. 88-63 (Sources of Drinking Water Policy) requires that, with certain exceptions, the Regional Water Board assign the municipal and domestic water supply use to water bodies. Based on the exception criteria specified in Resolution No. 88-63, the Regional Water Board excepted Reach 1 and 2 of the San Diego Creek, Rattlesnake, Syphon, and Sand Canyon Reservoirs, and Upper and Lower Newport Bay from the municipal and domestic supply beneficial use.

On January 22, 2004, the Regional Water Board adopted Resolution No. R8-2004-0001, amending the Basin Plan to incorporate revised boundaries for groundwater subbasins, now termed "management zones", new nitrate-nitrogen and TDS objectives for the new management zones, and new nitrogen and TDS management strategies applicable to both surface and ground waters. The State Water Board and Office of Administrative Law (OAL) approved the N/TDS Amendment on September 30, 2004 and December 23, 2004, respectively. EPA approved the surface water standards components of the N/TDS Amendment on June 20, 2007. Effluent limitations for TDS and TIN in this Order are based on applicable water quality objectives, adopted and now in effect as part of the N/TDS Amendment. TDS limits for recycled water use are based on the TDS objective for the affected groundwater management zone.

As previously discussed, the Facility discharges wastewater from several discharge points. The designated beneficial uses of receiving waters affected by the discharge from the Facility are as follows:

Table 10. Basin Plan Beneficial Uses

Discharge Point	Receiving Water Name	Beneficial Use(s)
001 to 08	Irvine Groundwater Management Zone	Present or Potential: Municipal and domestic supply, agricultural supply, industrial service supply, and industrial process supply.
003	Rattlesnake Reservoir	Present or Potential: Agricultural supply, water contact recreation, non-contact water recreation, warm freshwater habitat, and wildlife habitat Excepted from Municipal and Domestic Supply
004	Sand Canyon Reservoir	Present or Potential: Agricultural supply, water contact recreation, non-contact water recreation, warm freshwater habitat, and wildlife habitat Excepted from Municipal and Domestic Supply
007	Syphon Reservoir	Present or Potential: Agricultural supply, water contact recreation, non-contact water recreation, warm freshwater habitat, and wildlife habitat Excepted from Municipal and Domestic Supply
Storm-007	San Diego Creek, Reach 1	Present or Potential: Water contact recreation, non-contact water recreation, warm freshwater habitat, and wildlife habitat Excepted from Municipal and Domestic Supply
Storm-008	San Joaquin Freshwater Marsh	Present or Potential: Water contact recreation; non-contact water recreation; warm freshwater habitat; preservation of biological habitats of special significance; rare, threatened or endangered species; and wildlife habitat Excepted from Municipal and Domestic Supply
Storm-007 & Storm-008	Newport Bay, Upper	Present or Potential: Water contact recreation, Non-contact water recreation, Commercial and sport fishing, Preservation of biological habitats of special significance, Wildlife habitat, Rare, threatened or endangered species, Spawning, reproduction, and development, Marine habitat, Shellfish harvesting, and Estuarine habitat

Table 10. Basin Plan Beneficial Uses

Discharge Point	Receiving Water Name	Beneficial Use(s)
		Excepted from Municipal and Domestic Supply

Requirements of this Order implement the Basin Plan.

2. **National Toxics Rule (NTR) and California Toxics Rule (CTR).** USEPA adopted the NTR on December 22, 1992, and later amended it on May 4, 1995 and November 9, 1999. About forty criteria in the NTR applied in California. On May 18, 2000, USEPA adopted the CTR. The CTR promulgated new toxics criteria for California and, in addition, incorporated the previously adopted NTR criteria that were applicable in the state. The CTR was amended on February 13, 2001. These rules contain water quality criteria for priority pollutants.

3. **State Implementation Policy.** On March 2, 2000, the State Water Board adopted the *Policy for Implementation of Toxics Standards for Inland Surface Waters, Enclosed Bays, and Estuaries of California* (State Implementation Policy or SIP). The SIP became effective on April 28, 2000 with respect to the priority pollutant criteria promulgated for California by the USEPA through the NTR and to the priority pollutant objectives established by the Regional Water Board in the Basin Plan. The SIP became effective on May 18, 2000 with respect to the priority pollutant criteria promulgated by the USEPA through the CTR. The State Water Board adopted amendments to the SIP on February 24, 2005 that became effective on July 13, 2005. The SIP establishes implementation provisions for priority pollutant criteria and objectives and provisions for chronic toxicity control. Requirements of this Order implement the SIP.

4. **Alaska Rule.** On March 30, 2000, USEPA revised its regulation that specifies when new and revised state and tribal water quality standards (WQS) become effective for CWA purposes (40 C.F.R. § 131.21, 65 Fed. Reg. 24641 (April 27, 2000)). Under the revised regulation (also known as the Alaska rule), new and revised standards submitted to USEPA after May 30, 2000, must be approved by USEPA before being used for CWA purposes. The final rule also provides that standards already in effect and submitted to USEPA by May 30, 2000, may be used for CWA purposes, whether or not approved by USEPA.

5. **Antidegradation Policy.** Section 131.12 requires that the state water quality standards include an antidegradation policy consistent with the federal policy. The State Water Board established California's antidegradation policy in State Water Board Resolution No. 68-16. Resolution No. 68-16 incorporates the federal antidegradation policy where the federal policy applies under federal law. Resolution No. 68-16 requires that existing water quality be maintained unless degradation is justified based on specific findings. The Regional Water Board's Basin Plan implements, and incorporates by reference, both the State and federal antidegradation policies. The permitted discharge must be consistent with the antidegradation provision of section 131.12 and State Water Board Resolution No.

68-16. All effluent limitations in this Order are at least as stringent as those in prior waste discharge requirements for the Facilities, except for copper and mercury (see Section III.C.6 below). Based on the data currently available, discharges in compliance with the terms and conditions of this Order should not result in a lowering of water quality and are therefore consistent with antidegradation provisions.

6. **Anti-Backsliding Requirements.** Sections 402(o)(1) and 303(d)(4) of the CWA and federal regulations at title 40, Code of Federal Regulations[2] section 122.44(l) prohibit backsliding in NPDES permits. These anti-backsliding provisions require that effluent limitations in a reissued permit must be as stringent as those in the previous permit, with some exceptions in which limitations may be relaxed. This order does not contain effluent limits for copper and mercury as the past permit did. Section 402(o)(2)(A), General Prohibition Exceptions, states that, "A permit with respect to which paragraph (1) applies may be renewed, reissued, or modified to contain a less stringent effluent limitation applicable to a pollutant if...material and substantial alterations or additions to the permitted facility occurred after permit issuance which justify the application of a less stringent effluent limitation."

   The reasonable potential analysis conducted using effluent data for the past five years does not show an exceedance of applicable water quality criteria for copper or mercury or any other priority pollutant. Also, in June 2008 IRWD added a new circular secondary clarifier to their existing activated sludge process and during 2013 IRWD completed the construction and started the operation of a 10-mgd treatment capacity expansion for MWRP, which has significantly improved the removal efficiency of the MWRP for copper and mercury from the wastewater (amongst other pollutants). These substantial alterations or additions completed by IRWD on MWRP meets the criteria of Section 402(o)(2)(A) of the CWA. Based on these findings, Water Quality Board staff cannot justify the inclusion of effluent limits for copper and mercury in this Order. All other effluent limitations in this Order are at least as stringent as the effluent limitations in the previous order. Therefore, this Order conforms to the anti-backsliding requirements of the CWA.

7. **Monitoring and Reporting Requirements.** Section 122.48 of 40 CFR requires that all NPDES permits specify requirements for recording and reporting monitoring results. Sections 13267 and 13383 of the CWC authorize the Regional Water Board to require technical and monitoring reports. The Monitoring and Reporting Program (MRP) establishes monitoring and reporting requirements to implement federal and State requirements. This MRP is provided in Attachment E.

8. **Pretreatment.** This Order contains requirements for the implementation of an effective pretreatment program pursuant to Section 307 of the Federal Clean Water Act; 40 CFR, Parts 35 and 403; and/or Section 2233, Title 23, California Code of Regulations. In January 1986, the Discharger joined the Orange County Sanitation District (OCSD) to dispose of untreated wastewater generated within the

---

2 *All further statutory references are to title 40 of the Code of Federal Regulations unless otherwise indicated.*

Discharger's service area when it is not needed for reclamation. In February of 1987, the Discharger and OCSD entered into a memorandum of understanding (MOU) governing the administration of the Discharger's industrial waste program. The MOU brought industries considered as Class I industries by the IRWD's wastewater discharge regulations/ordinance under a joint IRWD/OCSD Class I permit, which is administered by OCSD's ordinance. The MOU also preserves the independent authority and responsibilities of both agencies, thereby allowing the Discharger to operate its pretreatment program for the MWRP in compliance with Federal and state pretreatment regulations. This Order requires the Discharger to update, as necessary, its MOU with OCSD.

9. **Biosolids.** On February 19, 1993, the USEPA issued a final rule for the use and disposal of sewage sludge, 40 CFR, Part 503. This rule requires that producers of sewage sludge meet certain monitoring, reporting, handling, and disposal requirements. The State of California has not been delegated the authority to implement this program; therefore, the U.S. Environmental Protection Agency is the implementing agency. However, this Order includes Biosolids monitoring and reporting requirements.

D. Impaired Water Bodies on CWA 303(d) List

Section 303(d) of the CWA requires states to identify water bodies where water quality standards are not expected to be met after technology-based effluent limitations have been implemented for point sources. For all 303(d)-listed water bodies and pollutants, the Regional Water Board has developed and/or plans to develop total maximum daily loads (TMDLs) that specify waste load allocations (WLA) for point sources and load allocations (LA) for non-point sources.

On June 28, 2007, the U. S. EPA approved the State's 2004-2006-303(d) list of impaired water bodies. This list included Reaches 1 and 2 of San Diego Creek and Upper and Lower Newport Bay. One or more of these water bodies were determined to be impaired by various pollutants, including: sediment, fecal coliform, nutrients, metals and organochlorine compounds. TMDLs have been developed to address these impairments as follows:

E. TMDLs

Nutrient TMDL

On April 17, 1998, the Regional Water Board adopted Resolution No. 98-9, amending the Basin Plan to incorporate a Nutrient Total Maximum Daily Load (TMDL) for the Newport Bay/San Diego Creek Watershed. The TMDL was amended by Resolution No. 98-100 on October 9, 1998 and thereafter approved by the State Water Resources Control Board, Office of Administrative Law and the US EPA. The nutrient TMDL was developed to address aesthetic and recreational nuisances created by algal blooms in Newport Bay, as well as the concern that these blooms may adversely affect wildlife. The TMDL establishes final targets that are based on a 50% reduction in nitrogen loading. The TMDL requires that the 50% reduction be achieved no later than December 31, 2007 for summer loading (between April 1 and September 30); the 50%

reduction in winter inputs (between October 1 and March 31) is to be achieved no later than December 31, 2012. While the TMDL requires reductions in nutrient loadings, it is recognized that too few nutrients in a waterbody can potentially adversely affect wildlife.

Like prior Order No. R8-2007-0003, this Order implements relevant requirements of the nutrient TMDL. To implement the nutrient TMDL, this Order includes a total nitrogen effluent limit of 1 mg/L for stormwater discharges to San Diego Creek, which is tributary to Newport Bay. The Discharger has complied and proposes to continue to comply with this requirement by implementing a nitrogen offset program. Nitrogen discharges in excess of 1 mg/L will be offset by nitrogen reductions as the result of the Discharger's diversion and treatment of San Diego Creek flows in the IRWD constructed wetlands in the San Joaquin Freshwater Marsh. This Order includes Discharge Prohibition III.F.3, which addresses this condition by requiring an approved nutrient offset program for discharges exceeding 1 mg/L of total nitrogen. Also, during wet weather conditions, storm water runoff from the Sand Canyon Reservoir's watershed occasionally causes overflows[3] from the reservoir into San Diego Creek. The Discharger has implemented best management practices to minimize overflows from Sand Canyon Reservoir during the rainy season. During the term of Order No. R8-2007-0003, Sand Canyon Reservoir has overflowed twice in 2010 and 2011 during the rainy season. The nutrient TMDL excludes nitrogen loads from sources during storm events that result in flows of 50 mean daily cubic feet per second or more in San Diego Creek at Campus Drive. Recent monitoring data indicate that the nutrient TMDL goals for 2012 have already been met.

The MWRP is located adjacent to the San Joaquin Freshwater Marsh and San Diego Creek. The groundwater elevation at the Facility site is high. Consequently, dewatering of the shallow groundwater zone is necessary to protect in-ground facilities. The area is dewatered through a network of shallow zone wells with two separate discharge points, either into Reach 1 of San Diego Creek or into the San Joaquin Freshwater Marsh. This Order does not regulate the discharges from the groundwater dewatering activities as the past Order No. R8-2007-0003 did. The Regional Water Board regulates the groundwater dewatering discharge from MWRP under the General Discharge Permit for Discharges to Surface Waters of Groundwater Resulting from Groundwater Dewatering Operations and/or Groundwater Cleanup Activities at Sites within the San Diego Creek/Newport Bay Watershed Polluted by Petroleum Hydrocarbons, Solvents, Metals and/or Salts, Order No. R8-2007-0041 (NPDES No. CAG918002). Also, Regional Water Board issued Time Schedule Order No. R8-2009-0069 (TSO), as amended by Order No. R8-2013-0060, to allow dischargers enrolled under Order No. R8-2007-0041 additional time to comply with the numeric effluent limitations for selenium. IRWD has enrolled under Order No. R8-2007-0041 and is complying with the discharge, monitoring, and reporting requirements included within this order and the TSO.

Sediment TMDL

On April 19, 1998, the Regional Water Board adopted Resolution No. 98-69, amending the Basin Plan to establish a Total Maximum Daily Load for sediment for the Newport bay/San Diego Creek Watershed. On October 9, 1998, the Regional Water Board

---

3 *Rattlesnake Reservoir is not expected to overflow during the life of this Order.*

adopted Resolution No.98-101 amending Resolution No. 98-69 to clarify certain portions of the Sediment TMDL as recommended by the Office of Administrative Law. This sediment TMDL applies to Orange County and Cities within the watershed and does not apply to discharges from the IRWD's Facilities.

Fecal Coliform Bacteria TMDL
On April 9, 1999, the Regional Water Board adopted Resolution No.99-10, amending the Basin Plan to establish a Total Maximum Daily Load for Fecal Coliform Bacteria in Newport Bay. The amendment requires the implementation of best Management Practices (BMPs) to control bacterial inputs to provide a reasonable assurance that water quality standards will be met. This TMDL applies to urban and agricultural stormwater discharges and not to the Facility discharge. The waste discharge requirements for these Facilities include effluent limitations for coliform that are more stringent than the TMDLs.

Toxics TMDL
On June 14, 2002, the U.S. Environmental Protection Agency, Region 9 promulgated Total Maximum Daily Loads for Toxics Pollutants for San Diego Creek and Newport Bay. EPA established TMDLs for a number of toxic pollutants, including : selenium; several heavy metals; and a number of organic chemicals, including modern pesticides (i.e., diazinon and chlorpyrifos), legacy pesticides (DDT, Chlordane, etc.) and polychlorinated biphenyls (PCBs). Reasonable potential analyses conducted for effluent discharges, regulated under this Order, from the MWRP do not indicate levels of concern.

Diazinon and Chlorpyrifos TMDL
The toxic substance TMDLs promulgated by the U.S. Environmental Protection Agency (U.S. EPA) on June 14, 2002 included a TMDL for diazinon and chlorpyrifos in San Diego Creek, and for chlorpyrifos in Upper Newport Bay.

On April 4, 2003, the Regional Water Board adopted Resolution No. R8-2003-0039, amending the Basin Plan to incorporate a Diazinon and Chlorpyrifos Total Maximum Daily Load for San Diego Creek and Upper Newport Bay. The amendment includes an implementation plan but is identical to the TMDL established by the U.S. EPA with respect to numeric targets and load allocations. The amendment also provided background information concerning the water quality impairment being addressed, and the sources of diazinon and chlorpyrifos in the Newport Bay watershed.

Reasonable potential analysis conducted for effluent discharges from the MWRP do not indicate the presence of the TMDL constituents in the discharge at significant concentrations.

F. Other Plans, Polices and Regulations

In most areas of the watershed, there is no significant amount of receiving water at the point of discharge. Therefore, no mixing zone allowance is included in the calculation of effluent limits. Consequently, compliance with the effluent limits is required to be determined at the end of the discharge pipe or at a location prior to where the discharge

enters the receiving water.

G. Rattlesnake, Syphon, and Sand Canyon Reservoirs

Rattlesnake, Syphon, and Sand Canyon Reservoirs are used as impoundments to store and deliver recycled water. Rattlesnake, Syphon, and Sand Canyon Reservoirs are isolated from other surface waters. Except during catastrophic storm events or exercise of emergency valves or other requirements of dam safety, water in Rattlesnake and Syphon Reservoirs is not released into downstream surface waters, while the Sand Canyon Reservoir is managed to reduce the risk of recycled water overflows caused by storm water runoff from the reservoir watershed during rainfall events occurring over a 60-day period or less that result in a rainfall equivalent to that from a 25-year, 24-hour storm event.

IV. RATIONALE FOR EFFLUENT LIMITATIONS AND DISCHARGE SPECIFICATIONS

The CWA requires point source dischargers to control the amount of conventional, non-conventional, and toxic pollutants that are discharged into the waters of the United States. The control of pollutants discharged is established through effluent limitations and other requirements in NPDES permits. There are two principal bases for effluent limitations in the Code of Federal Regulations: section 122.44(a) requires that permits include applicable technology-based limitations and standards; and section 122.44(d) requires that permits include water quality-based effluent limitations to attain and maintain applicable numeric and narrative water quality criteria to protect the beneficial uses of the receiving water.

A. Discharge Prohibitions

The discharge prohibitions are based on the Federal Clean Water Act, Basin Plan, State Water Board's plans and policies, U.S. Environmental Protection Agency guidance and regulations, and previous permit Order No. R8-2007-0003's provisions and are consistent with the requirements set for other discharges regulated by NPDES permits adopted by the Regional Water Board.

B. Technology-Based Effluent Limitations

1. Scope and Authority

Section 301(b) of the CWA and implementing USEPA permit regulations at section 122.44, title 40 of the Code of Federal Regulations, require that permits include conditions meeting applicable technology-based requirements at a minimum, and any more stringent effluent limitations necessary to meet applicable water quality standards. The discharge authorized by this Order must meet minimum federal technology-based requirements based on Secondary Treatment Standards at Part 133 and/or Best Professional Judgment (BPJ) in accordance with Part 125, section 125.3.

Regulations promulgated in 40 CFR §125.3(a)(1) require technology-based effluent

limitations for municipal dischargers to be placed in waste discharge requirements based on Secondary Treatment Standards or Equivalent to Secondary Treatment Standards.

The Federal Water Pollution Control Act Amendments of 1972 (PL 92-500) established the minimum performance requirements for POTWs [defined in Section 304(d)(1)]. Section 301(b)(1)(B) of that Act requires that such treatment works must, as a minimum, meet effluent limitations based on secondary treatment as defined by the USEPA Administrator.

Based on this statutory requirement, USEPA developed secondary treatment regulations, which are specified in 40 CFR Part 133. These technology-based regulations apply to all municipal wastewater treatment plants and identify the minimum level of effluent quality attainable by secondary treatment in terms of biochemical oxygen demand (BOD_5), total suspended solids (TSS), and pH.

C. Water Quality-Based Effluent Limitations (WQBELs) for DPs 003, 004, & 007

1. Scope and Authority

Section 301(b) of the CWA and section 122.44(d) require that permits include limitations more stringent than applicable federal technology-based requirements where necessary to achieve applicable water quality standards.

Section 122.44(d)(1)(i) mandates that permits include effluent limitations for all pollutants that are or may be discharged at levels that have the reasonable potential to cause or contribute to an exceedance of a water quality standard, including numeric and narrative objectives within a standard. Where reasonable potential has been established for a pollutant, but there is no numeric criterion or objective for the pollutant, water quality-based effluent limitations (WQBELs) must be established using: (1) USEPA criteria guidance under CWA section 304(a), supplemented where necessary by other relevant information; (2) an indicator parameter for the pollutant of concern; or (3) a calculated numeric water quality criterion, such as a proposed state criterion or policy interpreting the state's narrative criterion, supplemented with other relevant information, as provided in section 122.44(d)(1)(vi).

The process for determining reasonable potential and calculating WQBELs when necessary is intended to protect the designated uses of the receiving water as specified in the Basin Plan, and achieve applicable water quality objectives and criteria that are contained in other state plans and policies, or any applicable water quality criteria contained in the CTR and NTR.

2. Applicable Beneficial Uses and Water Quality Criteria and Objectives

a. The Basin Plan specifies narrative and numeric water quality objectives applicable to surface water as follows.

Table 11. Applicable Basin Plan Surface Water Quality Objectives

Constituents	Basis for Limitations
Ammonia Nitrogen	Ammonia dissociates under certain conditions to the toxic un-ionized form. Thus nitrogen discharges to the surface water pose a threat to aquatic life and instream beneficial uses, as well as to the beneficial uses of affected groundwater. This Order includes a total ammonia-nitrogen average monthly limit of 0.75 mg/L. This limit was derived using the calculation procedures detailed in Table 4-4 of Chapter 4 of the Basin Plan.
Hydrogen Ion (pH)	pH is a measure of hydrogen Ion concentration in the water. A pH range of 6.5 to 8.5 for surface water discharges is specified as per the Basin Plan.
Oil & Grease	Oil and related materials have a high surface tension and are not soluble in water, resulting in odors and visual impacts. A limit of 15 mg/l is specified based on best professional judgment.
Total Chlorine Residual	Chlorine and its reaction products are toxic to aquatic life. To protect aquatic life, the Basin Plan specifies that for wastewater discharged into inland surface waters the chlorine residual should not exceed 0.1 mg/L. .

Total Chlorine Residual: Recycled water from the MWRP is distributed to the Sand Canyon, Syphon, and Rattlesnake Reservoirs for storage. Super-chlorination of the recycled water is necessary to prevent fouling of the recycled water distribution lines. As such, discharges of recycled water into the reservoirs contain concentrations of residual chlorine that may be toxic to aquatic organisms that may be present in the reservoirs. However, the residual chlorine present in the discharges dissipates within the reservoirs such that, currently, the reservoirs support aquatic life, including fish. The discharge of chlorinated recycled water to the reservoirs does not compromise the beneficial uses of the reservoirs, which include warm water aquatic habitat. The discharge of chlorinated recycled water to the reservoirs is necessary to accommodate wastewater reclamation and water conservation. It is in the public interest to accommodate these activities.

This Order specifies an effluent limitation for total chlorine residual to protect aquatic life beneficial uses. Compliance with this limitation, at Rattlesnake and Sand Canyon Reservoirs, is to be achieved outside a zone of initial dilution (about 45 feet away from the outfall at each reservoir), wherein dissipation of the chlorine occurs. In the case of Syphon Reservoir, due to its smaller volume with respect to the other two reservoirs, compliance is to be achieved at the point of discharge to the reservoir (DP-007).

TDS/Ammonia-Nitrogen: TDS/Ammonia-Nitrogen limitations are specified in the Order for discharges to surface waters, including Sand Canyon, Syphon, and Rattlesnake Reservoirs. The proposed TDS limit is based on the prior effluent limit in Order No. R8-2007-0003. The proposed total ammonia-nitrogen monthly average limit was updated and calculated using the equations included in Table 4-4 of Chapter 4 of the Basin Plan. The numeric value of the proposed total ammonia-nitrogen limit is less than the limit included in Order No. 2007-0003 and details regarding the calculation of the prosed limit are included in Attachment O

of this Order. The TDS/ Total Ammonia-Nitrogen limits are shown in the table below.

Table 12. TDS/ Ammonia-Nitrogen Limits

TDS, mg/L	Total Ammonia-Nitrogen, mg/L
720	0.75

In accordance with 40 CFR Section 122.45(d), there may be instances in which the basis for a limit for a particular continuous discharge may be impracticable to be stated as a maximum daily, average weekly, or average monthly effluent limitation. The Regional Water Board has determined that it is not practicable to express TDS effluent limitation as average weekly and average monthly effluent limitations because the TDS objectives in the Basin Plan were established primarily to protect the underlying groundwater. Consequently, a 12-month average period is more appropriate.

b. **NTR, CTR and SIP.** The National Toxics Rule, California Toxics Rule (CTR) and State Implementation Policy specify numeric objectives for toxic substances and the procedures whereby these objectives are to be implemented. The procedures include those used to conduct reasonable potential analysis to determine the need for effluent limitations for priority and non-priority pollutants.

c. **Requirement to meet 2.2 total coliform bacteria limit in the effluent.** Article 3, Section 60305 of Title 22, Chapter 3, "Use of Recycled water for impoundments" of the California Code of Regulations specifies that recycled water used as a source of supply in a nonrestricted recreational impoundment shall be at all times an adequately disinfected, oxidized, coagulated, clarified, filtered wastewater (tertiary treated). The degree of treatment specified represents an approximately 5-log reduction in the virus content of the water. The California State Water Resources Control Board's (SWRCB's) Division of Drinking Water (DDW) has determined that this degree of virus removal is necessary to protect the health of people using these impoundments for water contact recreation. The SWRCB's DDW has developed wastewater disinfection guidelines ("Wastewater Disinfection for Health Protection", Department of Health Services, Sanitary Engineering Branch, February 1987) for discharges of wastewater to surface waters where water contact recreation (REC-1) is a beneficial use. The disinfection guidelines recommend the same treatment requirements for wastewater discharges to REC-1 waters as those stipulated in Title 22 for supply of recycled water to nonrestricted recreational impoundments, since the public health risks under both scenarios are analogous. The disinfection guidelines are based on sound science and are widely used as guidance to assure public health and beneficial use protection.

3. Determining the Need for WQBELs

In accordance with Section 1.3 of the SIP, the Regional Water Board conducted a

reasonable potential analysis (RPA) for each priority pollutant with an applicable criterion or objective to determine if a WQBEL is required in the Order. The Regional Water Board analyzed effluent data to determine if a pollutant in a discharge has the reasonable potential to cause or contribute to an excursion above a state water quality standard. For all parameters that have the reasonable potential to cause or contribute to an excursion above a water quality standard, numeric WQBELs are required. The RPA considers criteria from the CTR, and when applicable, water quality objectives specified in the Basin Plan.

Sufficient data are needed to conduct a complete RPA. If data are not sufficient, the Discharger will be required to gather the appropriate data for the Regional Water Board to conduct the RPA. Upon review of the data, and if the Regional Water Board determines that WQBELs are needed to protect the beneficial uses, the permit will be reopened for appropriate modification.

The RPA was performed for the priority pollutants for which effluent data was available. Based on the review and analysis of effluent data provided by the Discharger, no reasonable potential exist for deriving WQBELs for priority pollutants, including copper and mercury, except for dichlorobromomethane, based on the following:

Copper and Mercury: Effluent limits for total recoverable copper and mercury are not included in this Order. Effluent Copper concentrations have significantly decreased since 2007 from an annual average effluent monthly concentration of 11.86 µg/L to 7.04 µg/L as of December 2014. Although there has been a modest decline in the influent copper concentration, the decrease in the effluent concentration of copper is very likely due to an improvement in removal efficiency of the wastewater treatment processes at MWRP. Also, the decrease of the mercury concentration to non-detect levels in the effluent of MWRP is attributable, mainly, to improvements in the wastewater treatment processes as well. This Order requires the Discharger to conduct monthly monitoring for copper and mercury. After one year the monitoring frequency may be reduced to quarterly (see Section IV.A.9. of Attachment E for more details).

Some freshwater metals criteria in the CTR are expressed as a function of total hardness. The metals criteria are equations in which hardness is the variable. The actual numeric value of the criterion is calculated using hardness measurements. The use of a fixed hardness value results in a fixed numerical effluent limit for each metal, thereby simplifying the effluent limitation and facilitating the determination of compliance. To calculate the metals criteria, the effluent minimum hardness of 165 mg/L was used.

Dichlorobromomethane (DCBM): Between January 2007 and December 2014 forty-one effluent samples were collected at monitoring location REC-001 and analyzed for DCBM. The August 2009 and October 2014 effluent sample laboratory results show values of 46 µg/L and 54 µg/L, respectively. These values equal or exceed the water quality criteria for DCBM of 46 µg/L (Human Health, organisms only). However, these values (two out of forty-one) from effluent samples collected

over the span of eight years represent concentration spikes that could be due to sudden treatment process load changes, such as ammonia breakthrough; which causes an increase in chlorine demand at the disinfection system, thus increasing the formation of chlorine disinfection byproducts like DCBM.

IRWD has built, at MWRP, a 10.6-MGD treatment process expansion consisting of a membrane bioreactor (MBR) with nutrient removal capabilities and a new 21-mgd capacity UV disinfection system. Once the MBR is fully operational, it will alleviate the treatment capacity issue and ammonia breakthrough. In addition, when the UV disinfection system is effectively operated, it may reduce significantly the use of chlorine disinfection and subsequently reduce the formation of disinfection byproducts. IRWD will use the UV disinfection system for disinfection of approximately more than half of the effluent flow. IRWD cannot use the UV disinfection system until it receives final system approval from the California State Water Resources Control Board's Division of Drinking Water. Based on the fact that applicable water quality criterion for DCBM has been exceeded and that an explanation for the isolated water quality criteria exceedances is not available, WQBELs have been developed for DCBM and calculation details are included in Attachment N of this Order. The Order requires the Discharger to conduct monthly monitoring for dichlorobromomethane.

Free Cyanide: The laboratory analysis result from one effluent sample collected in May 2012 shows that free cyanide was detected at a concentration of 14 µg/L, which is the maximum concentration detected between January 2007 and October 2013. This value exceeds the water quality criteria for free cyanide of 5.2 µg/L (criteria continuous concentration). The evaluation of the monthly effluent monitoring results gathered between January 2007 and December 2014 indicate that the water quality criteria for free cyanide was exceeded a second time in April 2013 when free cyanide was detected at a concentration of 6.9 µg/L. This means that the water quality criteria for free cyanide was exceeded two times between January 2007 and December 2014 (two times out of 94 monthly sampling periods), which appear to be isolated incidents of episodic nature due to changes in treatment process loading and/or other causes.

In addition, the Discharger has been using an EPA approved method for free cyanide (cyanide amenable to chlorination test method) that is suspected of overestimating the concentration of free cyanide due to interference from the sample preservation chemical (sodium hydroxide). Other dischargers have claimed that the EPA approved methods for total cyanide and/or cyanide amenable to chlorination test methods are prone to interference due to the use of sodium hydroxide as a sample preservative. The dischargers formed a regional task group under the Santa Ana River Dischargers Association (SARDA) and have proposed and tested two free cyanide analysis methods that require immediate testing after sample collection and the elimination or minimization of the use of sodium hydroxide for sample preservation.

The selected test method was evaluated for accuracy and repeatability under the oversight of researchers from California State University in San Bernardino. One of

the test methods has already been approved by the USEPA. Therefore, considering the isolated frequency of the exceedances of the water quality criteria for free cyanide and that the accuracy of the test methods used is in question, it is determined that no reasonable potential exist for free cyanide at this time and no WQBEL for free cyanide is included in this Order. This Order requires the Discharger to conduct monitoring for free cyanide on a monthly basis for one year and advises the Discharger to evaluate the use of an alternate USEPA approved free cyanide test method that does not require sodium hydroxide as a sample preservative. Otherwise, the Discharger's free cyanide test results derived from effluent samples analyzed with the use of the total cyanide and/or cyanide amenable to chlorination test methods will be used to determine RPA for free cyanide. If after one year, the effluent concentration is non-detect, at an acceptable detection level, the Discharger may reduce the monitoring frequency to quarterly (see Section IV.A.11. of Attachment E and Section VI.2.b. of this Order for more details).

The following table is a summary of the RPA evaluation for copper, mercury, bromodichloromethane, selenium, and free cyanide for discharges to surface water, using monthly monitoring data submitted by the Discharger for the last six years (From November 2008 through December 2014).

Table 13. MWRP Effluent Monitoring Data Summary, µg/L

Date	Cu (annual maximum value)	Hg (annual maximum value.)		Hardness, (annual minimum value) mg/L
		Reported Value	Detection Level	
From Nov-2008	9.45	0.035		259
2009	12.6	0.044		221
2010	6.45	ND	0.015	210
2011	7.0	ND	0.015	210
2012	6.64	ND	0.015	165
2013	9.33	0.0098		222
2014	8.79	ND	0.0046	165

Table 14. RPA Summary for DPs 003, 004, & 007

Parameter	unit	Effluent	CTR			Exceedance of CTR		
		MEC[4]	CMC[5]	CCC[6]	Human Health	CMC	CCC	Human Health
Copper (Cu)	µg/L	12.6	22	14		No	No	
Mercury (Hg)	µg/L	0.044			0.051			No

4 *MEC = observed maximum pollutant concentration.*
5 *CMC = Criteria Maximum Concentration.*
6 *CCC = Criteria Continuous Concentration.*

Dichlorobromomethane (DCBM)	µg/L	54			46			Yes
Free Cyanide	µg/L	14	22	5.2				Yes
Selenium (Se)	µg/L	4.3	20	5	4200	No	No	No

Note: Minimum annual value of hardness in effluent flows was 165 mg/l. Samples were collected in the last six years. See Attachment M for detailed RPAs for Cu, Hg, DCBM, and Se.

4. WQBEL Calculations

See Attachment N for WQBELs calculation and data details for dichlorobromomethane.

5. Whole Effluent Toxicity (WET)

This Order does not specify WET limits but requires chronic toxicity monitoring. The monitoring data indicated that during the past five years (November 2008 through October 2013), the monthly trigger of 1 TUc has been exceeded intermittently between 2008 and 2010 and only once between 2011 and October 2013. This data indicate that MWRP effluent exhibited reproductive toxicity of unknown origin between 2008 and 2010. Accelerated monitoring as required in the Order was conducted by the Discharger and a limited TIE was also performed. The facility built dechlorination facilities at DP-003 and DP-004 and optimized the use of dechlorination chemicals to prevent toxicity episodes. No significant chronic toxicity exceedances have been experienced after the improvement of the effluent dechlorination system. This Order continues to require accelerated monitoring and TIE's when the 1 TUc trigger is exceeded.

D. Best Professional Judgment-Based Effluent Specifications for DPs 003, 004, & 007

For tertiary treated wastewater, the BOD_5 and TSS concentration limits are based on Best Professional Judgment. The technology-based secondary treatment standards specifying BOD_5 and TSS concentration limits are less stringent.

Table 15. Tertiary Effluent BOD_5 and TSS Limits

Constituent	Average Weekly	Average Monthly
Biochemical Oxygen Demand	30 mg/L	20 mg/L
	7,006 lbs/day	4,670 lbs/day
Suspended Solids	30 mg/L	20 mg/L
	7,006 lbs/day	4,670 lbs/day

Mass loadings: concentration (mg/L) x 8.34 x 28 mgd

E. Summary of Final Effluent Limitations for DPs 003, 004, & 007

1. Satisfaction of Anti-Backsliding Requirements

All effluent limitations in this Order are at least as stringent as the effluent limitations in the previous Order except for total copper and mercury. This order does not contain effluent limits for copper and mercury as the past permit did. Section 402(o)(2)(A), Anti-Backsliding General Prohibition Exceptions, states that, "A permit with respect to which paragraph (1) applies may be renewed, reissued, or modified to contain a less stringent effluent limitation applicable to a pollutant if...material and substantial alterations or additions to the permitted facility occurred after permit issuance which justify the application of a less stringent effluent limitation."

The reasonable potential analysis conducted using effluent data for the past six years does not show an exceedance of applicable water quality criteria for copper or mercury or any significant exceedance of other priority pollutants for which data was available (see Section IV.C.3.). Also, in June 2008 IRWD added a new circular secondary clarifier to their existing activated sludge process and during 2013 IRWD completed the construction and started the operation of a 10-mgd treatment capacity expansion for MWRP, which has significantly improved the removal efficiency for copper and mercury from the wastewater (amongst other pollutants). These substantial alterations or additions completed by IRWD on MWRP meets the criteria of Section 402(o)(2)(A) of the CWA. Based on these findings, Regional Water Board staff is not proposing to include effluent limits for copper and mercury in this Order. All other effluent limitations in this Order are at least as stringent as the effluent limitations in the previous order. Therefore, this Order conforms to the anti-backsliding requirements of the CWA.

2. Satisfaction of Antidegradation Policy

Discharges in conformance with the requirements of this Order will not result in a lowering of water quality and therefore conform to antidegradation requirements specified in Resolution No. 68-16, which incorporates the federal antidegradation policy at 40 CFR 131.12. IRWD has significantly improved the quality of domestic water supply to its service area through construction and operation of the Irvine Desalter Project (see section II.A.5.), reduced reliance on high TDS imported water and use of low TDS groundwater. During dry weather, all the treated effluent from these Facilities is and will continue to be recycled or in the case of LAWRP, the treated effluent will be discharged to the Pacific Ocean. During periods of low demand for recycled water at MWRP, wastewater that is not needed for recycling is diverted to OCSD facilities for treatment and ocean disposal or to the Orange County Water District's Groundwater Replenishment System. Implementation of the Groundwater Replenishment Project, a joint effort of the OCSD (which includes the Discharger) and the Orange County Water District has created and will create additional demand for recycled water. The limitations in this Order are established at levels that assure no degradation of groundwater will occur as the result of wastewater recycling. Therefore, this discharge is consistent with federal and state antidegradation policies.

3. Stringency of Requirements for Individual Pollutants

Water quality-based effluent limitations have been scientifically derived to implement water quality objectives that protect beneficial uses. Both the beneficial uses and the water quality objectives have been approved pursuant to federal law and are the applicable federal water quality standards. To the extent that toxic pollutant water quality-based effluent limitations were derived from the CTR, the CTR is the applicable standard pursuant to section 131.38. The scientific procedures for calculating the individual water quality-based effluent limitations for priority pollutants are based on the CTR-SIP, which was approved by USEPA on May 18, 2000. Apart from certain changes to surface water standards resulting from the N/TDS Basin Plan amendment that do not materially affect the quality requirements for the discharges regulated by this Order, all beneficial uses and water quality objectives contained in the Basin Plan were approved under state law and submitted to and approved by USEPA prior to May 30, 2000. Any water quality objectives and beneficial uses submitted to USEPA prior to May 30, 2000, but not approved by USEPA before that date, are nonetheless "applicable water quality standards for purposes of the CWA" pursuant to section 131.21(c)(1). Collectively, this Order's restrictions on individual pollutants are no more stringent than required to implement the requirements of the CWA.

4. Summary of Final Effluent Limitations for DPs 003, 004, & 007:

Table 16. Summary of Water Quality-based Final Effluent Limitations for Discharge Points 003, 004, & 007

Parameter	Units	Effluent Limitations					Basis
		Average Monthly or as noted herein	Average Weekly	Max Daily	Instantaneous Minimum	Instantaneous Maximum	
BOD_5	mg/L*	20	30	--	--	--	BPJ,PO
Total Suspended Solids	mg/L	20	30	--	--	--	BPJ,PO
Total Residual Chlorine	mg/L	--	--	--	--	0.1	PO, BP
Ammonia Nitrogen	mg/L	0.75					BP
TDS	mg/L	720 (12-M avg)	--	--	--	--	PO, BP
pH	Std. unit	--	--	--	6.5	8.5	PO, BP
Coliform	MPN	--	2.2 Median of last 7 days	--	--	--	PO, Title 22
Dichlorobromo methane	µg/L	46		71			CTR, SIP

Notes: PO = Previous Order, R8-2007-0003; BP= Basin Plan.

F. Interim Effluent Limitations – Not Applicable

G. Land Discharge Specifications – Not Applicable

H. Reclamation Specifications – DPs 001, 002, & 008

1. Section 13523 of the California Water Code provides that a Regional Water Board, after consulting with and receiving the recommendations from the California State Water Resources Control Board's (SWRCB's) Division of Drinking Water (DDW) and any party who has requested in writing to be consulted, and after any necessary hearing, shall prescribe water reclamation requirements for water which is used or proposed to be used as recycled water, if, in the judgment of the Board, such requirements are necessary to protect the public health, safety, or welfare. Section 13523 further provides that such requirements shall include, or be in conformance with, the statewide uniform water recycling criteria established by the SWRCB's DDW pursuant to California Water Code Section 13521.

2. Reclamation specifications in the proposed Order are based on the recycling criteria contained in Title 22, Division 4, Chapter 3, Sections 60301 through 60355, California Code of Regulations, and the California Water Code Section 13521.

3. The TDS limitation of 910 mg/L for recycled water reuse on sites overlying the Irvine Groundwater Management Zone is based on the TDS water quality objective in Table 5-3 of the Basin Plan.

4. TIN limits: When recycled water is used for irrigation, no nitrogen limit is established for the effluent, since nitrogen is anticipated to be used by plants.

   For San Joaquin Reservoir, it is estimated that the potential seepage could be up to 80 gallons per minute (gpm). Seepage that does not percolate into the groundwater would likely flow to an unnamed creek that is tributary to Bonita Creek, and thence San Diego Creek, a tributary to Upper Newport Bay. Potential seepage from San Joaquin Reservoir could have nitrate concentrations on the order of 2 to 3 mg/L of nitrate as nitrogen. However, 70 to 80 percent of this nitrate may be reduced by natural processes. Therefore, the nitrate concentrations in the seepage could be reduced to less than 1 mg/L. The water quality effects of the seepage are expected to be insignificant. In any case, IRWD operates the San Joaquin Freshwater Marsh wetlands ponds treatment system. Flows diverted from San Diego Creek are treated in the ponds and then re-enter the Creek. The pond treatment system results in significant reductions in nitrogen entering Newport Bay via San Diego Creek, the Bay's major tributary. The nitrogen removed by the wetlands treatment system significantly more than offset nitrogen inputs to the Creek and Newport Bay that result from seepage from the Reservoir.

I. Groundwater Dewatering Requirements – Not Applicable

J. Storm Water Discharge Requirements – Storm-007 & Storm-008

On April 1, 2015, the State Board adopted the General Industrial Storm Water Permit, Order No. 2014-0057-DWQ, NPDES No. CAS000001. This General Permit implements the Final Regulations (40 CFR 122, 123, and 124) for storm water runoff published on November 16, 1990 by EPA in compliance with Section 402(p) of the Clean Water Act. Industrial facilities, including POTW sites, are required to obtain NPDES Permits for storm water discharges. The Discharger is required to comply with the State Water Resources Control Board Order No. 2014-0057-DWQ, except that it is not required to file a Notice of Intent with this Regional Water Board or the State Water Board for coverage under Order No. 2014-0057-DWQ. Accordingly, this Order incorporates requirements for the discharge of storm water from the facility to surface waters based on those specified in Order No. 2014-0057-DWQ, or any amendments thereto.

1. As discussed in Section III.E. Nutrient TMDL, the nutrient TMDL specifies wasteload and load allocations for total nitrogen mass inputs to the San Diego Creek/Newport Bay watershed from identified sources.

   To implement the nutrient TMDL, this Order includes a total nitrogen effluent limit of 1 mg/L for stormwater discharges to Reach 1 of San Diego Creek, which is tributary to Newport Bay. The Discharger complies with this requirement by implementing a nitrogen offset program. Nitrogen discharges in excess of 1 mg/L will be offset by nitrogen reductions as the result of the Discharger's diversion and treatment of San Diego Creek flows in the IRWD constructed wetlands in the San Joaquin Freshwater Marsh.

2. Attachments J & K show the requirements for implementing a stormwater pollution prevention plan and discharge monitoring and reporting program.

3. Summary of Effluent Limitations at Storm-007 and Storm-008

Table 17. Stormwater Discharge Limits at Storm-007 & Storm-008

Parameter	Units	Effluent Limitations				
		Average Monthly	Maximum Daily	Instantaneous Minimum	Instantaneous Maximum	Basis
pH	Std units	--	--	6.5	8.5	BP
Oil and Grease	mg/L	15	--	--	25	BPJ*
Total Suspended Solids	mg/L	100	--	--	400	BPJ*
Total Petroleum Hydrocarbons	µg/L	--	100	--	--	BPJ
Total Nitrogen to Reach 1 of San Diego Creek and tributary thereto	mg/L	1		--	--	TMDL

V. RATIONALE FOR RECEIVING WATER LIMITATIONS

A. Surface Water

1. The surface water receiving water limitations in this Order are based upon the water quality objectives contained in the Basin Plan.

2. The previous Order R8-2007-0003 allowed discharges from Sand Canyon Reservoir under certain storm conditions. This Order also allows discharges under extreme storm conditions. The nutrient TMDL excludes nitrogen loads from sources during storm events that result in flows of 50 mean daily cubic feet per second or more in San Diego Creek at Campus Drive. This Order includes Discharge Prohibition III.F.3, which addresses this condition by requiring an approved nutrient offset program for discharges exceeding 1 mg/L of total nitrogen.

B. Groundwater

The receiving groundwater limitations in the proposed Order are based upon the water quality objectives contained in the Basin Plan.

VI. RATIONALE FOR MONITORING AND REPORTING REQUIREMENTS

Section 122.48 of 40 CFR requires all NPDES permits to specify recording and reporting of monitoring results. Sections 13267 and 13383 of the CWC authorize the Regional Water Boards to require technical and monitoring reports. The Monitoring and Reporting Program (MRP), Attachment E of this Order, establishes monitoring and reporting requirements to implement federal and State requirements. The following provides the rationale for the monitoring and reporting requirements contained in the MRP for these facilities.

A. Influent Monitoring

This Order carries forward the treatment plant influent monitoring requirements specified in Order No. R8-2007-0003 without change. Influent monitoring is required to determine the effectiveness of the pretreatment program and assess treatment plant performance.

B. Effluent Monitoring

The Discharger is required to conduct monitoring of the permitted discharges in order to evaluate compliance with permit conditions. Monitoring requirements are given in the proposed monitoring and reporting program (Attachment E). This provision requires compliance with the monitoring and reporting program, and is based on 40 CFR 122.44(i), 122.62, 122.63 and 124.5. The SMP is a standard requirement in almost all NPDES permits (including the proposed Order) issued by the Regional Water Board. In addition to containing definitions of terms, it specifies general sampling/analytical protocols and the requirements of reporting of spills, violations, and routine monitoring data in accordance with NPDES regulations, the California Water Code, and Regional Water Board's policies. The monitoring and reporting program also contains sampling

program specific for the Discharger's wastewater treatment plant. It defines the sampling stations and frequency, pollutants to be monitored, and additional reporting requirements. Pollutants to be monitored include all pollutants for which effluent limitations are specified. Further, in accordance with Section 1.3 of the SIP, periodic monitoring is required for all priority pollutants defined by the CTR, for which criteria apply and for which no effluent limitations have been established, to evaluate reasonable potential to cause or contribute to an excursion above a water quality standard.

This Order continues the monitoring requirements specified in the Order No. R8-2007-0003 with modifications. This Order also requires the Discharger to conduct accelerated monitoring for those constituents that are detected in the annual priority pollutant scan.

C. Whole Effluent Toxicity Testing Requirements

Whole effluent toxicity (WET) protects the receiving water quality from the aggregate toxic effect of a mixture of pollutants in the effluent. WET tests measure the degree of response of exposed aquatic test organisms to an effluent. The WET approach implements the narrative "no toxics in toxic amounts" criterion. There are two types of WET tests: acute and chronic. An acute toxicity test is conducted over a shorter time period and measures mortality. A chronic toxicity test is conducted over a longer period of time and may measure mortality, reproduction, and growth.

The Basin Plan specifies a narrative objective for toxicity, requiring that all waters be maintained free of toxic substances in concentrations that are lethal to or produce other detrimental response on aquatic organisms. Detrimental response includes but is not limited to decreased growth rate, decreased reproductive success of resident or indicator species, and/or significant alterations in population, community ecology, or receiving water biota.

In addition to the Basin Plan requirements, Section 4 of the SIP states that a chronic toxicity effluent limitation is required in permits for all discharges that will cause, have the reasonable potential to cause, or contribute to chronic toxicity in receiving waters. Therefore, in accordance with the SIP, this Order requires the Discharger to conduct chronic toxicity testing. In addition, the Order establishes thresholds that when exceeded requires the Discharger to conduct accelerated toxicity testing and/or conduct toxicity identification evaluation (TIE) studies.

This Order requires the Discharger to conduct chronic toxicity testing of the effluent on a monthly basis whenever there is a discharge of recycled water to waters of the US, Sand Canyon, Syphon, and Rattlesnake Reservoirs. The Order also requires the Discharger to conduct an Initial Investigation Toxicity Reduction Evaluation (IITRE) program when either the two-month median of toxicity test results exceeds 1 TUc or any single test exceeds 1.7 TUc for survival endpoint. Based on the results of this investigation program and at the discretion of the Executive Officer, a more rigorous Toxicity Reduction Evaluation/Toxicity Identification Evaluation (TRE/TIE) may be required. A re-opener provision is included in the Order to incorporate a chronic toxicity

effluent limitation if warranted by the toxicity test results.

D. Receiving Water Monitoring

1. Surface Water

a. The Discharger shall provide a permanent measuring device at the Sand Canyon Reservoir that shows surface water elevation based on mean sea level datum line. The device shall be accessible and elevation markings shall be easily readable.

b. Receiving water monitoring is required to determine compliance with receiving water limitations and to characterize the water quality of the receiving water. Requirements are based on the Basin Plan.

2. Groundwater - Not Applicable

E. Other Monitoring Requirements

1. Water Supply Monitoring – The Discharger is required to collect a sample of each source of water supplied and analyze for total dissolved solids.

2. Biosolids Monitoring – On February 19, 1993, the USEPA issued a final rule for the use and disposal of sewage sludge, 40 CFR, Part 503. This rule requires that producers of sewage sludge meet certain reporting, handling, and disposal requirements. The State of California has not been delegated the authority to implement this program; therefore, the U.S. Environmental Protection Agency is the implementing agency. However, this Order includes Biosolids monitoring requirements.

3. Pretreatment Monitoring – These monitoring and reporting requirements are established pursuant EPA 40 CFR 403 regulations. IRWD and OCSD jointly implement pretreatment monitoring.

4 Storm Water Monitoring – This Order specifies Storm Water Monitoring and Reporting Requirements that are based on the State Water Resources Control Board's Industrial Storm Water General Permit Order No. 2014-0057-DWQ. Attachments J & K shows the required storm water monitoring and the best management plan.

VII. RATIONALE FOR PROVISIONS

A. Standard Provisions

Standard Provisions, which apply to all NPDES permits in accordance with section 122.41, and additional conditions applicable to specified categories of permits in accordance with section 122.42, are provided in Attachment D. The Discharger must

comply with all standard provisions and with those additional conditions that are applicable under section 122.42.

Section 122.41(a)(1) and (b) through (n) establish conditions that apply to all State-issued NPDES permits. These conditions must be incorporated into the permits either expressly or by reference. If incorporated by reference, a specific citation to the regulations must be included in the Order. Section 123.25(a)(12) allows the state to omit or modify conditions to impose more stringent requirements. In accordance with section 123.25, this Order omits federal conditions that address enforcement authority specified in sections 122.41(j)(5) and (k)(2) because the enforcement authority under the Water Code is more stringent. In lieu of these conditions, this Order incorporates by reference Water Code section 13387(e).

B. Special Provisions

1. Reopener Provisions

The provisions are based on 40 CFR Parts 122.44(c) and 123. The Regional Water Board may reopen the permit to modify permit conditions and requirements. Causes for modifications include the promulgation of new regulations, modification in sludge use or disposal practices, or adoption of new regulations by the State Water Board or Regional Water Board, including revisions to the Basin Plan.

2. Special Studies and Additional Monitoring Requirements

a. Toxicity Identification Evaluations or Toxicity Reduction Evaluations. This provision is based on the SIP, Section 4, Toxicity Control Provisions.

b. The Discharger is required to evaluate the use of an alternate USEPA approved free cyanide test method that was developed in collaboration with the Santa Ana River Dischargers Association. (See Section VI.C.2.b. of this Order).

c. The SWRCB and the California Department of Resources Recycling and Recovery (CalRecycle) have developed an exclusion from the Process Facility/Transfer Station permitting regulations for Publicly Owned Treatment Works (POTW) that are planning or already receiving and directly injecting anaerobically digestible material (ADM) into their anaerobic digesters and are being regulated under an NPDES and/or WDR permit. The CalRecycle exclusion assumes that a POTW has developed Standard Operating Procedures (SOPs) for the proper handling, processing, tracking, and management of the ADM received. The Discharger is proposing to receive hauled-in ADM for injection into anaerobic digester, therefore, this Order requires IRWD that prior to initiation of the hauling, the Discharger shall notify this Regional Water Board and develop and implement appropriate SOPs for this activity (See Section VI. C.2.c. of this Order).

3. Best Management Practices and Pollution Prevention

Best Management Practices and Pollution Prevention - The requirements are based on the SIP Section 2.4.5.1

4. Construction, Operation, and Maintenance Specifications

Construction, Operation, and Maintenance Specifications - The requirements are based on requirements that were specified in the prior Order.

5. Special Provisions for Municipal Facilities (POTWs Only)

a. **Recycled Water Requirements**: Oxidized, filtered, and disinfected by UV and/or chlorine Wastewater Requirements: These requirements are based on Title 22 requirements for the use of recycled water.

b. **Pretreatment Requirements:** The treatment plant capacity is 28 mgd and there are significant industrial users within the service areas. Consequently, this Order contains requirements for the implementation of an effective pretreatment program pursuant to Section 307 of the Federal Clean Water Act; Parts 35 and 403 of Title 40, Code of Federal Regulations (40 CFR 35 and 40 CFR 403); and/or Section 2233, Title 23, California Code of Regulations.

IRWD administers its Pretreatment Program jointly with OCSD under a Memorandum of Understanding (MOU) signed in 1987. Under the MOU, OCSD has the initial responsibility for enforcement and administers its enforcement responsibility through the OCSD Enforcement Management System. According to the ;OCSD-IRWD Pretreatment Program Compliance Audit, IRWD must have its own enforcement responsibility plan in order to be in compliance with the Federal Pretreatment Regulations in 40CFR403. IRWD prepared such document.

c. **Sanitary Sewer Systems Requirements:** The State Water Board issued the Statewide General Waste Discharge Requirements for Sanitary Sewer Systems, Water Quality Order No. 2006-0003-DWQ (General Order) on May 2, 2006, as amended by Order No. WQ 2008-0002-EXEC. The General Order requires public agencies that own or operate sanitary sewer systems with greater than one mile of pipes or sewer lines to enroll for coverage under the General Order. The General Order requires agencies to develop sanitary sewer management plans (SSMPs) and report all sanitary sewer overflows (SSOs), among other requirements and prohibitions. The Discharger has enrolled and implemented these requirements.

Furthermore, the General Order contains requirements for operation and maintenance of collection systems and for reporting and mitigating sanitary sewer overflows. Inasmuch that the Discharger's collection system is part of the system that is subject to this Order, certain standard provisions are applicable as specified in Provisions, section VI.C.5. For instance, the 24-hour reporting requirements in this Order are not included in the General Order. The Discharger must comply with both the General Order and this Order. The

Discharger and public agencies that are discharging wastewater into the facility were required to obtain enrollment for regulation under the General Order.

d **Biosolids Disposal Requirements:** On February 19, 1993, the USEPA issued a final rule for the use and disposal of sewage sludge, 40 CFR, Part 503. This rule requires that producers of sewage sludge meet certain reporting, handling, and disposal requirements. The State of California has not been delegated the authority to implement this program; therefore, the U.S. Environmental Protection Agency is the implementing agency.

6. Other Special Provisions – Not Applicable

7. Compliance Schedules – Not Applicable

VIII. PUBLIC PARTICIPATION

The California Regional Water Quality Control Board, Santa Ana Region (Regional Water Board) is considering the issuance of waste discharge requirements (WDRs) that will serve as a National Pollutant Discharge Elimination System (NPDES) permit for Michelson Water Reclamation Plant. As a step in the WDR adoption process, the Regional Water Board staff has developed tentative WDRs. The Regional Water Board encourages public participation in the WDR adoption process.

A. Notification of Interested Parties

The Regional Water Board has notified the Discharger and interested agencies and persons of its intent to prescribe waste discharge requirements for the discharge and has provided them with an opportunity to submit their written comments and recommendations. Notification was provided through the posting of Notice of Public Hearing at the Irvine City Hall and at the local newspaper; and at the Regional Water Board website: http://www.waterboards.ca.gov/santaana on May 19, 2015.

B. Written Comments

The staff determinations are tentative. Interested persons are invited to submit written comments concerning these tentative WDRs. Comments must be submitted either in person or by mail to the Executive Office at the Regional Water Board at the address above on the cover page of this Order.

To be fully responded to by staff and considered by the Regional Water Board, written comments must be received at the Regional Water Board offices by 5:00 p.m. on May 29, 2015.

Julio Lara
California Regional Water Quality Control Board

Santa Ana Region
3737 Main Street, Suite 500
Riverside, CA 92501-3348

C. Public Hearing

The Regional Water Board will hold a public hearing on the tentative WDRs during its regular Board meeting on the following date and time and at the following location:

Date:	June 19, 2015
Time:	9:00 A.M.
Location:	City of Loma Linda 25541 Barton Road Loma Linda, CA

Interested persons are invited to attend. At the public hearing, the Regional Water Board will hear testimony, if any, pertinent to the discharge, WDRs, and permit. Oral testimony will be heard; however, for accuracy of the record, important testimony should be in writing.

Please be aware that dates and venues may change. Our Web address is http://www.waterboards.ca.gov/santaana where you can access the current agenda for changes in dates and locations.

D. Waste Discharge Requirements Petitions

Any aggrieved person may petition the State Water Resources Control Board to review the decision of the Regional Water Board regarding the final WDRs. The petition must be submitted within 30 days of the Regional Water Board's action to the following address:

State Water Resources Control Board
Office of Chief Counsel
P.O. Box 100, 1001 I Street
Sacramento, CA 95812-0100

E. Information and Copying

The Report of Waste Discharge (RWD), related documents, tentative effluent limitations and special provisions, comments received, and other information are on file and may be inspected at the address above at any time between 8:30 a.m. and 4:45 p.m., Monday through Friday. Copying of documents may be arranged through the Regional Water Board by calling (951) 320-2008.

F. Register of Interested Persons

Any person interested in being placed on the mailing list for information regarding the WDRs and NPDES permit should contact the Regional Water Board, reference this facility, and provide a name, address, and phone number.

G. Additional Information

Requests for additional information or questions regarding this Order should be directed to Julio Lara at (951) 782-4901.