California Regional Water Quality Control Board
Santa Ana Region
3737 Main Street, Suite 500
Riverside, CA 92501-3348

NOTICE OF PUBLIC HEARING

for

WASTE DISCHARGE REQUIREMENTS
(National Pollutant Discharge Elimination System Permit)
ORDER NO. R8-2006-0017, NPDES NO. CA8000404

for

United States Department of the Navy
Former Marine Corps Air Station Tustin
Groundwater Treatment Facilities
Orange County

On the basis of preliminary staff review and application of lawful standards and regulations, the California Regional Water Quality Control Board, Santa Ana Region, proposes to issue waste discharge requirements for long-term discharges of extracted and treated groundwater from the United States Department of the Navy, former Marine Corps Air Station Tustin's groundwater treatment facilities into Peters Canyon Wash, a tributary of San Diego Creek and thence Newport Bay.

The Board is seeking comments concerning the proposed waste discharge requirements and the potential effects of the discharge on the water quality and beneficial uses of the affected receiving waters.

The Board will hold a public hearing to consider adoption of the proposed waste discharge requirements as follows:

DATE:	March 3, 2006
TIME:	9:00 a.m.
PLACE:	City Council Chambers of Loma Linda 25541 Barton Road City of Loma Linda

Interested persons are invited to submit written comments on the proposed Order No. R8-2006-0017. Interested persons are also invited to attend the public hearing and express their views on issues relating to the proposed Order. Oral statements will be heard, but should be brief to allow all interested persons time to be heard. For the accuracy of the record, all testimony (oral statements) should be submitted in writing.

Although all comments that are provided up to and during the public hearing on this matter will be considered, receipt of comments by February 13, 2006 would be appreciated so that they can be used in the formulation of the draft Order that will be transmitted to the Board two weeks prior to the hearing. The draft Order may contain changes resulting from comments received from the public. To view on/or download a copy of the draft Order, please access our website at *www.waterboards.ca.gov/santaana*on or after February 20, 2006.

The Board's proposed Order, related documents, and all comments and petitions received may be inspected and copied at the Regional Board office, 3737 Main Street, Suite 500, Riverside, CA 92501-3348 (phone 951-782-4130) by appointment scheduled between the hours of 9:00 a.m. and 3:00 p.m., Monday through Friday. Copies of the proposed Order will be mailed to interested persons upon request to Jane Qiu at (951) 320-2008.

Any person who is physically challenged and requires reasonable accommodation to participate in this Regional Board Meeting should contact Catherine Ehrenfeld at (951) 782-3285 no later than February 20, 2006.

California Regional Water Quality Control Board
Region 8, Santa Ana Region

3737 Main Street, Suite 500, Riverside, California 92501-3348
Phone (951) 782-4130 • FAX (951) 781-6288 • TDD (951) 782-3221
http://www.waterboards.ca.gov/santaana

ORDER NO. R8-2006-0017
NPDES NO. CA8000404

WASTE DISCHARGE REQUIREMENTS FOR THE UNITED STATES DEPARTMENT OF THE NAVY FORMER MARINE CORPS AIR STATION TUSTIN DISCHARGE TO PETERS CANYON WASH IN THE SAN DIEGO CREEK/NEWPORT BAY WATERSHED

The following Discharger is subject to waste discharge requirements as set forth in this Order:

Table 1. Discharger Information

Discharger	United States Department of the Navy
Name of Facility	Former Marine Corps Air Station Tustin
Facility Address	Bounded by Red Hill Boulevard, Barranca Parkway, Jamboree Road and Newport Avenue
	Tustin, CA 92710
	Orange County

The discharge points identified below are subject to waste discharge requirements. The Discharger is authorized to discharge from the following discharge points as set forth below:

Table 2. Discharge Locations

Discharge Point	Effluent Description	Discharge Point Latitude	Discharge Point Longitude	Receiving Water
DP-001 UST 222 PCAP	Treated groundwater	33 °, 42', 51.5" N	117 °, 49', 34.6" W	Storm drain, Peters Canyon Wash/San Diego Creek Irvine Groundwater Management Zone
DP-002 UST 222 PCAP	Treated groundwater	33 °, 42', 55" N	117 °, 49', 42" W	Irvine Groundwater Management Zone
DP-003 IRP-13S TCRA	Treated groundwater	33 °, 42', 45.6" N	117 °, 49', 40.4" W	Storm drain, Peters Canyon Wash/San Diego Creek Irvine Groundwater Management Zone

Table 3. Administrative Information

This Order was adopted by the Regional Water Board on:	**April 21, 2006**
This Order shall become effective on:	**April 21, 2006**
This Order shall expire on:	**April 1, 2011**
The U.S. Environmental Protection Agency (U.S. EPA) and the Regional Water Board have classified this discharge as a minor discharge.	
The Discharger shall file a Report of Waste Discharge in accordance with Title 23, California Code of Regulations, not later than 180 days in advance of the Order expiration date as application for issuance of new waste discharge requirements.	

IT IS HEREBY ORDERED, that this Order supercedes Order No. 96-18-067 except for enforcement purposes, and, in order to meet the provisions contained in Division 7 of the California Water Code (CWC) and regulations adopted thereunder, and the provisions of the federal Clean Water Act (CWA), and regulations and guidelines adopted thereunder, the Discharger shall comply with the requirements in this Order.

I, Gerard J. Thibeault, Executive Officer, do hereby certify that this Order No. R8-2006-0017 with all attachments is a full, true, and correct copy of an Order adopted by the California Regional Water Quality Control Board, Santa Ana Region, on April 21, 2006.

Gerard J. Thibeault, Executive Officer

TABLE OF CONTENTS

I. Facility Information **4**
II. Findings **4**
III. Discharge Prohibitions **9**
IV. Effluent Limitations and Discharge Specifications **10**
A. Effluent Limitations – Discharge Points 001 and 003 10
1. Final Effluent Limitations – Discharge Points 001 and 003 10
2. Interim Effluent Limitations 12
3. Toxicity Requirements/Discharge Specifications - DPs 001 and 003 12
B. Land Discharge Specifications – Discharge Point 002 13
V. Receiving Water Limitations **13**
A. Surface Water Limitations 13
B. Groundwater Limitations 14
VI. Provisions **15**
A. Standard Provisions 15
B. Monitoring and Reporting Program Requirements 16
C. Special Provisions 17
1. Reopener Provisions 17
2. Special Studies, Technical Reports and Additional Monitoring Requirements 17
3. Best Management Practices and Pollution Prevention 17
4. Compliance Schedules 18
5. Construction, Operation and Maintenance Specifications 18
6. Other Special Provisions 19
VII. Compliance Determination **21**

LIST OF TABLES

Table 1. Discharger Information 1
Table 2. Discharge Locations 1
Table 3. Administrative Information 1
Table 4. Facility Information **4**
Table 5. Basin Plan Beneficial Uses 7
Table 6. Effluent Limitations 12
Table 7. Land Discharge Specifications 14

LIST OF ATTACHMENTS

Attachment A – Definitions **A-1**
Attachment B – Topographic Map **B-1**
Attachment C – Flow Schematic **C-1**
Attachment D –Standard Provisions **D-1**
Attachment E – Monitoring and Reporting Program (MRP) **E-1**
Attachment F – Fact Sheet **F-1**
Attachment G – Minimum Levels **G-1**
Attachment H – EPA Priority Pollutant List **H-1**
Attachment I – Practical Quantitation Levels **I-1**

I. FACILITY INFORMATION

The following Discharger is subject to waste discharge requirements as set forth in this Order:

Table 4. Facility Information

Discharger	United States Department of the Navy
Name of Facility	Former Marine Corps Air Station Tustin
Facility Address	Facility is bounded by Red Hill Boulevard, Barranca Parkway, Jamboree Road and Edinger Avenue
	Tustin, CA 92710
	Orange County
Facility Contact, Title, and Phone	Darren Newton, BRAC Environmental Coordinator, with Department of the Navy (619)-532-0963
Mailing Address	Department of Navy BRAC Program Management Office West 1455 Frazee Road, Suite 900 San Diego, CA 92108-4301
Type of Facility	Groundwater extraction, treatment and discharge
Facility Design Flow	UST 222 PCAP, Discharge point 001: 67,322 gallons per day UST 222 PCAP, Discharge point 002: 28,800 gallons per day IRP 13S TCRA, Discharge Point 003: 36,720 gallons per day

II. FINDINGS

The California Regional Water Quality Control Board, Santa Ana Region (hereinafter Regional Water Board), finds:

A. Background. The property owner, United States Department of the Navy (hereinafter Discharger) are currently discharging under Order No. 96-18-067 and National Pollutant Discharge Elimination System (NPDES) Permit No. CAG918001. Individual waste discharge requirements are being issued for the discharge of up to 200,000 gallons per day of treated groundwater from the former Marine Corps Air Station Tustin, hereinafter Facility.

For the purposes of this Order, references to the "discharger" or "permittee" in applicable federal and State laws, regulations, plans, or policy are held to be equivalent to references to the Discharger herein.

B. Facility Description. The Discharger owns and operates two groundwater treatment facilities. One at former underground storage tank (UST) site 222 (PCAP system) and one at IRP site 13S (TCRA system), . At UST 222 PCAP, groundwater is extracted and treated using hydrogen peroxide, ozone and granular activated carbon inoculated with bacteria prior to discharge into the same storm drain, at Discharge Point 001. At IRP site 13S TCRA, the groundwater is extracted and filtered through granular activated carbon prior to discharge into a storm drain at Discharge Point 003. Treated groundwater is discharged from Discharge Point 001 and 003 into the storm drain and flows (see table on cover page) to Peters Canyon Wash, a tributary to San Diego Creek within the San Diego Creek/Newport Bay watershed, all waters of the United States.

Attachment B provides a map of the area around the Station. Attachment C provides a flow schematics for each of the two treatment systems at the Station.

C. **Legal Authorities.** This Order is issued pursuant to Section 402 of the Federal Clean Water Act (CWA) and implementing regulations adopted by the U.S. Environmental Protection Agency (USEPA) and Chapter 5.5, Division 7 of the California Water Code (CWC). It shall serve as a NPDES permit for point source discharges from this facility to surface waters. This Order also serves as Waste Discharge Requirements (WDRs) pursuant to Article 4, Chapter 4 of the CWC for discharges that are not subject to regulation under CWA section 402.

D. **Background and Rationale for Requirements**. The Regional Water Board developed the requirements in this Order based on available environmental information on file and through monitoring and reporting programs. Attachment F, which contains background information and rationale for Order requirements, is hereby incorporated into this Order and, thus, constitutes part of the Findings for this Order. Attachments A through E and Attachments G through I are also incorporated into this Order.

E. **State law.** The provisions/requirements in subsections IV.B., and V.B. of this Order are included to implement State law only. These provisions are not required or authorized under the federal CWA; consequently, violations of these provisions are not subject to the enforcement remedies that are available for NPDES violations.

F. **California Environmental Quality Act (CEQA).** This action to adopt an NPDES permit is exempt from the provisions of Chapter 3 of Division 13 of the Public Resources Code in accordance with Section 13389 of the CWC.

G. **Technology-based Effluent Limitations.** Title 40 of the Code of Federal Regulations (CFR) at Section 122.44(a) requires that permits include applicable technology-based limitations and standards. This Order includes technology-based effluent limitations to protect the beneficial uses of the receiving waters. The Regional Water Board has considered the factors listed in the CWC §13241 in establishing these requirements and Best Professional Judgment in accordance with 40 CFR §125.3. A detailed discussion of the technology-based effluent limitations development is included in the Fact Sheet (Attachment F).

H. **Water Quality-based Effluent Limitations.** Section 122.44(d) of 40 CFR requires that permits include effluent limitations for all pollutants that are or may be discharged at levels that have the reasonable potential to cause or contribute to an exceedance of a water quality standard, including numeric and narrative objectives within a standard. Where numeric water quality objectives have not been established for a pollutant, water quality-based effluent limitations (WQBELs) may be established: (1) using USEPA criteria guidance under CWA Section 304(a), supplemented where necessary by other relevant information; (2) on an indicator parameter for the pollutant of concern; or (3) using a calculated numeric water quality criterion, such as a proposed State criterion or policy interpreting the State's narrative criterion, supplemented with other relevant information, as provided in 40 CFR Section 122.44(d)(1)(vi).

I. **Water Quality Control Plans.** The Regional Water Board adopted a revised Water Quality Control Plan for the Santa Ana Region (hereinafter Basin Plan) that became effective on January 24, 1995. The Basin Plan designates beneficial uses, establishes water quality objectives, and contains implementation programs and policies to achieve those objectives for all waters in the Santa Ana Region addressed through the plan. More recently, the Basin Plan was amended significantly to incorporate revised boundaries for groundwater subbasins, now termed

"management zones", new nitrate-nitrogen and TDS objectives for the new management zones, and new nitrogen and TDS management strategies applicable to both surface and ground waters. The Regional Water Board adopted this Basin Plan Amendment on January 22, 2004. The State Water Resources Control Board (State Water Board) and Office of Administrative Law (OAL) approved the Amendment on September 30, 2004 and December 23, 2004, respectively. The surface water standards provisions of the Amendment are awaiting approval by the U.S. Environmental Protection Agency but have no bearing on the requirements of this Order.

State Water Board Resolution No. 88-63 (Sources of Drinking Water Policy) requires that, with certain exceptions, the Regional Water Board assign the municipal and domestic supply use to water bodies within the Region. Based on criteria specified in Resolution No. 88-63, the Regional Board excepted Peters Canyon Wash, San Diego Creek and Newport Bay from the municipal and domestic supply beneficial use. Beneficial uses applicable to San Diego Creek/Newport Bay include the following:

Table 5. Basin Plan Beneficial Uses

Discharge Point	Receiving Water Name	Beneficial Use(s)
001, 003	Peters Canyon Wash, a tributary to San Diego Creek/Newport Bay	Present or potential: Warm freshwater habitat (WARM); wildlife habitat (WILD) Intermittent: Ground water recharge (GWR), contact (REC-1) and non-contact (REC-2) water recreation.
	San Diego Creek Reach 1	Present or potential: Warm freshwater habitat (WARM); wildlife habitat (WILD) Intermittent: Contact (REC-1) and non-contact (REC-2) water recreation.
	Upper and Lower Newport Bay	Present or potential: Wildlife habitat (WILD), preservation of rare, threatened or endangered species (RARE), navigation, commercial and sport fishing, preservation of biological habitats of special significance, spawning, reproduction, and development, marine habitat, shellfish harvesting, and estuarine habitat, contact (REC-1) and non-contact (REC-2) water recreation.
001, 002, 003	Irvine Groundwater Management Zone	Present or potential: Municipal and domestic water supply (MUN), agricultural supply, industrial service supply, and industrial process supply.

Requirements of this Order specifically implement the applicable Water Quality Control Plans and Policies.

J. **Industrial Storm Water Requirements.** Pursuant to Section 402(p) of the Clean Water Act and Title 40 of the Code of Federal Regulations (CFR) Part 122, 123, and 124, the State Water Resources Control Board adopted general NPDES permits to regulate storm water discharges associated with industrial activities (State Board Order No. 97-03-DWQ) adopted on April 17, 1997. The Discharger's storm water runoff is regulated under this general industrial permit.

K. **National Toxics Rule (NTR) and California Toxics Rule (CTR).** USEPA adopted the NTR on December 22, 1992, and later amended it on May 4, 1995 and November 9, 1999. About forty criteria in the NTR applied in California. On May 18, 2000, USEPA adopted the CTR, which incorporated the NTR criteria that were applicable in California. The CTR was amended on February 13, 2001. These rules contain water quality criteria for priority pollutants.

L. **State Implementation Policy.** On March 2, 2000, the State Water Board adopted the *Policy for Implementation of Toxics Standards for Inland Surface Waters, Enclosed Bays, and Estuaries of California* (State Implementation Policy or SIP). The SIP became effective on April 28, 2000 with respect to the priority pollutant criteria promulgated for California by the USEPA through the NTR and to the priority pollutant objectives established by the Regional Water Board in the Basin Plan. The SIP became effective on May 18, 2000 with respect to the priority pollutant criteria promulgated by the USEPA through the California Toxics Rule. The State Water Board adopted amendments to the SIP on February 24, 2005 that became effective on July 13, 2005.

M. **Nutrient TMDL.** On April 17, 1998, the Regional Water Board adopted Resolution No. 98-9, amending the Basin Plan for the Santa Ana River Basin to incorporate a Nutrient Total Maximum Daily Load (TMDL) for the Newport Bay/San Diego Creek Watershed. The TMDL was amended by Resolution No. 98-100 on October 9, 1998 and thereafter approved by the State Water Resources Control Board, Office of Administrative Law and the US EPA. The nutrient TMDL was developed to address the aesthetic and recreational nuisances created by algal blooms in Newport Bay, as well as the concern that these blooms may adversely affect wildlife. The TMDL establishes final targets that are based on a 50% reduction in nitrogen loading to Newport Bay[1]. The TMDL requires that the 50% reduction be achieved no later than December 31, 2007 for summer loading (between April 1 and September 30); the 50% reduction in winter inputs (between October 1 and March 31) is to be achieved no later than December 31, 2012. While the TMDL requires reductions in nutrient loadings, it is recognized that too few nutrients in a waterbody can potentially adversely affect wildlife. See Fact Sheet, Attachment F.

N. **Selenium TMDL.** On June 14, 2002, the U.S. EPA Region 9 established total maximum daily loads (TMDLs) for selenium and other toxic pollutants for San Diego Creek and Newport Bay. The EPA TMDLs for selenium identified loading targets for specific groups of discharges, but recognized that quantification of the baseline loading from dischargers of groundwater was infeasible due to the lack of selenium data. See Fact Sheet, Attachment F.

The EPA TMDLs do not include specific implementation requirements, such as compliance timeframes or control actions, since implementation plans are the responsibility of the Regional Water Board. However, pursuant to federal regulations, the Regional Water Board is required to ensure that NPDES permits for discharges in this watershed contain effluent limitations necessary to be consistent with the wasteload allocations specified in the TMDLs. In the absence of an adopted implementation plan, the Regional Water Board can and must employ its legally authorized discretion in determining the appropriate permit provisions to implement these allocations.

---

[1] The TMDL also establishes targets for phosphorus. See Fact Sheet (Attachment F).

O. Compliance Schedules and Interim Requirements. Section 2.1 of the SIP provides that, based on a Discharger's request and demonstration that it is infeasible for an existing Discharger to achieve immediate compliance with an effluent limitation derived from a CTR criterion, compliance schedules may be allowed in an NPDES permit. Unless an exception has been granted under Section 5.3 of the SIP, a compliance schedule may not exceed 5 years from the date that the permit is issued or reissued, nor may it extend beyond 10 years from the effective date of the SIP (or May 18, 2010) to establish and comply with CTR criterion-based effluent limitations. Where a compliance schedule for a final effluent limitation exceeds 1 year, the Order must include interim numeric limitations for that constituent or parameter. Where allowed by the Water Quality Control Plan (Basin Plan), compliance schedules and interim effluent limitations or discharge specifications for other constituents may also be granted. The Basin Plan specifies language authorizing the inclusion of compliance schedules in NPDES permits for effluent limits that implement water quality objectives that were adopted, revised or newly interpreted after July 15, 2002. This Order includes compliance schedules and interim effluent limitations and discharge specifications. A detailed discussion of the basis for the compliance schedule(s) and interim effluent limitation(s) and discharge specifications is included in the Fact Sheet (Attachment F).

P. Alaska Rule. On March 30, 2000, USEPA revised its regulation that specifies when new and revised State and Tribal water quality standards (WQS) become effective for CWA purposes (40 CFR 131.21, 65 FR 24641, April 27, 2000). Under the revised regulation (also known as the Alaska rule), new and revised standards submitted to USEPA after May 30, 2000, must be approved by USEPA before being used for CWA purposes. The final rule also provides that standards already in effect and submitted to USEPA by May 30, 2000, may be used for CWA purposes, whether or not approved by USEPA.

Q. Stringency of Requirements for Individual Pollutants. This Order contains restrictions on individual pollutants that are no more stringent than required by the federal CWA. Individual pollutant restrictions consist of technology-based restrictions and water quality-based effluent limitations. The technology-based effluent limitations consist of restrictions on pollutants listed in Attachment F. Restrictions on pollutants referenced are specified in federal regulations as discussed in Attachment F, and the permit's technology-based pollutant restrictions are no more stringent than required by the CWA. Water quality-based effluent limitations have been scientifically derived to implement water quality objectives that protect beneficial uses. Both the beneficial uses and the water quality objectives have been approved pursuant to federal law and are the applicable federal water quality standards (together with the Antidegradation Policy (see "Q", below)). To the extent that toxic pollutant water quality-based effluent limitations were derived from the CTR, the CTR is the applicable standard pursuant to 40 CFR 131.38. The scientific procedures for calculating the individual water quality-based effluent limitations are based on the CTR-SIP, which was approved by USEPA on May 18, 2000. All beneficial uses and water quality objectives contained in the Basin Plan were approved under State law and submitted to and approved by USEPA prior to May 30, 2000. Any water quality objectives and beneficial uses submitted to USEPA prior to May 30, 2000, but not approved by USEPA before that date, are nonetheless "applicable water quality standards for purposes of the CWA" pursuant to 40 CFR 131.21(c)(1). Collectively, this Order's restrictions on individual pollutants are no more stringent than required to implement the technology-based requirements of the CWA and the applicable water quality standards for purposes of the CWA.

R. **Antidegradation Policy.** Section 131.12 of 40 CFR requires that State water quality standards include an antidegradation policy consistent with the federal policy. The State Water Board established California's antidegradation policy in State Water Board Resolution No. 68-16. Resolution No. 68-16 incorporates the federal antidegradation policy where the federal policy applies under federal law. Resolution No. 68-16 requires that existing quality of waters be maintained unless degradation is justified based on specific findings. The Regional Water Board's Basin Plan implements, and incorporates by reference, both the State and federal antidegradation policies. As discussed in detail in the Fact Sheet the permitted discharge is consistent with the antidegradation provision of 40 CFR Section 131.12 and State Water Board Resolution No. 68-16.

S. **Anti-Backsliding Requirements.** Sections 402(o)(2) and 303(d)(4) of the CWA and federal regulations at 40 CFR § 122.44(l) prohibit backsliding in NPDES permits. These anti-backsliding provisions require effluent limitations in a reissued permit to be as stringent as those in the previous permit, with some exceptions where limitations may be relaxed. All effluent limitations in this Order are at least as stringent as the effluent limitations in the previous Order.

T. **Monitoring and Reporting.** Section 122.48 of 40 CFR requires that all NPDES permits specify requirements for recording and reporting monitoring results. Sections 13267 and 13383 of the CWC authorize the Regional Water Board to require technical and monitoring reports. The Monitoring and Reporting Program establishes monitoring and reporting requirements to implement federal and State requirements. This Monitoring and Reporting Program is provided in Attachment E.

U. **Standard and Special Provisions.** Standard Provisions, which in accordance with 40 CFR §§122.41and 122.42, apply to all NPDES discharges and must be included in every NPDES permit, are provided in Attachment D. The Regional Water Board has also included in this Order special provisions applicable to the Discharger. A rationale for the special provisions contained in this Order is provided in the attached Fact Sheet (Attachment F).

V. **Notification of Interested Parties.** The Regional Water Board has notified the Discharger and interested agencies and persons of its intent to prescribe Waste Discharge Requirements for the discharge and has provided them with an opportunity to submit their written comments and recommendations. Details of notification are provided in the Fact Sheet (Attachment F) of this Order.

W. **Consideration of Public Comment.** The Regional Water Board, in a public meeting, heard and considered all comments pertaining to the discharge. Details of the Public Hearing are provided in the Fact Sheet (Attachment F) of this Order.

III. DISCHARGE PROHIBITIONS

A. Wastes discharged from Discharge Points 001 and 002-Site UST 222 PCAP, and 003-Site IRP 13S TCRA treatment systems, shall be limited to extracted and treated groundwater.

B. The discharge of treated groundwater at a location or in a manner different from those described in the Findings is prohibited.

C. The bypass or overflow of untreated contaminated groundwater or wastes to surface waters or surface water drainage courses is prohibited, except as allowed in Standard Provision I.A.7. of Attachment D, Standard Provisions.

D. The discharge of any substances in concentrations toxic to animal or plant life is prohibited.

E. The discharge of any radiological, chemical, or biological warfare agent or high level radiological waste is prohibited.

F. The discharge of oil, trash, industrial waste sludge, or other solids directly to the surface waters in this region or in any manner that will ultimately affect surface waters in this region is prohibited.

G. Odors, vectors, and other nuisances of waste origin are prohibited beyond the limits of the Discharger's facilities.

H. Unless approved by the Executive Officer, the addition of chemicals to the discharge is prohibited.

IV. EFFLUENT LIMITATIONS AND DISCHARGE SPECIFICATIONS

A. Effluent Limitations – Discharge Points 001 and 003

1. Final Effluent Limitations – Discharge Points 001 and 003

a. The discharge shall maintain compliance with the following effluent limitations at monitoring locations M-001, M-003 for Discharge Points 001 and 003, with compliance measured at all Monitoring Locations described in the attached Monitoring and Reporting Program (Attachment E):

Table 6. Effluent Limitations

Parameter	Units	Effluent Limitations			
		Average Monthly	Maximum Daily	Instantaneous Minimum	Instantaneous Maximum
Flow	mgd		0.2		
Benzene	µg/L	1.0	2.0		
Ethylbenzene	µg/L	10.0	20.1		
Methyl Tertiary Butyl Ether (MTBE)	µg/L	5.0	10.0		
Tert Butyl Alcohol (TBA)	µg/L	12.0	34		
Tetrachloroethene (PCE)	µg/L	5.0	10.1		
Toluene	µg/L	10.0	20.1		
Total Petroleum Hydrocarbons	µg/L	100	201		
Total Recoverable Lead	µg/L	15.18	30.45		
Total Recoverable Selenium (See IV.A.1.b. and c., below)	µg/L	4.0	8.4		
	lbs/day	0.007	0.014		

Parameter	Units	Effluent Limitations			
		Average Monthly	Maximum Daily	Instantaneous Minimum	Instantaneous Maximum
Trichloroethylene (TCE)	µg/L	5.0	10.1		
Xylene	µg/L	10.0	20.1		
1,1-Dichloroethylene	µg/L	6.0	12.1		
1,2,3-Trichloropropane (1,2,3-TCP)	µg/L	0.5	1.01		
1,2-Dichloroethylene	µg/L	10.0	20.1		
1,4-Dioxane	µg/L	3.0	6.0		
Cis-1,2- Dichloroethylene	µg/L	6.0	12.1		
pH	Std unit			6.5	8.5
Sulfides	mg/L	--	0.4		
			--		
Total Nitrogen	mg/L	13 (or 50% reduction, see A.1.d , below)	--		
Total Residual Chlorine[2]	mg/L	--	0.1		
Total Suspended Solids	mg/L	--	75		

b. Compliance with the Total Recoverable Selenium limit specified in A.1.a, above, shall be achieved as soon as possible but no later than December 21, 2009, provided that:
   1) The Discharger becomes and remains a member of the Nitrogen and Selenium Management Program Working Group (NSMP Working Group, or Working Group), including the Discharger's satisfaction of financial and participatory commitments established by the Working Group; and
   2) The Discharger implements one or more reasonable BMPs for volume-reduction and/or treatment identified as part of the Work Plan developed and implemented by the Working Group; and
   3) The Discharger, as a member of the Working Group, is implementing the Work Plan in accordance with the schedule approved by the Regional Water Board (see Provision VI. C.6. - Other Special Provisions), or acceptable alternative dates approved by the Executive Officer.

c. If the conditions specified in A.1.b., above are not satisfied, then compliance with the Total Recoverable Selenium limit in A.1.a., above shall be achieved immediately, unless the Discharger implements a program or programs approved by the Executive Officer to offset discharges in excess of the effluent limits. (See Provision VI.C.6.b.)

2 If chlorine is used for treatment or disinfection of wastes

d. When the quality of extracted/dewatered groundwater discharges exceeds 1 mg/L Total Inorganic Nitrogen (TIN), as demonstrated by monitoring at locations M-001 and M-003, the ambient total nitrogen (TN) mass in the discharges shall be reduced by 50% as soon as possible but no later than December 31, 2007. That is, the average monthly mass of total nitrogen (TN) discharges shall not be greater than 50% of the mass of TN in the extracted groundwater. Whichever is more stringent of either the reduction in TN mass or TN concentration limit specified in A.1.a, above will be the limit. This limit applies unless the Discharger develops and implements, as soon as possible but no later than December 31, 2007, an approved offset program (See Provisions VI.C.6.a.). The total nitrogen monthly mass emission rate for the extracted groundwater and discharged wastewater shall be determined by using the following formula:

Mass (lbs/month) of extracted or discharged wastewater = 8.34 x Q x C

Where:

Q= total flow of extracted or discharged within the month in million gallons
C= the sum of all measurements for the parameter within the month (in milligrams per liter) for the extracted or discharged wastewater divided by the total number of samples.

2. Interim Effluent Limitations

a. With regard to the selenium contained in the discharges subject to this Order by the Discharger as a NSMP Working Group member, the requirements specified in IV.A.1.b constitute interim, performance-based limitations and compliance schedules for these discharges.

b. If the Discharger does not become or does not remain a Working Group member and elects to implement a selenium offset program as provided in Provision VI.C.6.b., the Discharger's efforts to reduce/eliminate selenium discharges coupled with interim steps necessary to implement an acceptable offset constitute interim performance-based limitations.

3. Toxicity Requirements/Discharge Specifications - DPs 001 and 003

Toxicity Requirements with compliance measured at monitoring location M-001 and M-003: The discharge shall not result in acute toxicity in ambient receiving waters. The effluent shall be deemed to cause acute toxicity when the toxicity test of 100% effluent as required in Monitoring and Reporting Program Attachment "E", results in failure of the test as determined using the pass or fail test protocol specified in Methods for Measuring the Acute Toxicity of Effluents to Freshwater and Marine Organisms (EPA-821-R-02-012, Fifth Edition, October 2002). The Discharger shall immediately stop the discharge whenever the discharge fails the toxicity test(s). Prior to resuming the discharge, the Discharger shall identify and correct the source of the toxicity to the satisfaction of the Executive Officer.

B. Land Discharge Specifications – Discharge Point 002

1. Beginning April 21, 2006, the discharge of wastes to land through irrigation and injection wells/percolation trenches shall maintain compliance with the following limitations at Discharge Point 002, with compliance measured at Monitoring Location M-002 as described in the attached Monitoring and Reporting Program (Attachment E).

Table 7. Land Discharge Specifications

Parameter	Units	Effluent Limits	
		Average Monthly	Maximum Daily
Benzene	µg/L	0.7	1.4
Ethylbenzene	µg/L	5.0	10.1
Methyl Tert Butyl Ether (MTBE)	µg/L	5.0	10.1
Tert Butyl Alcohol (TBA)	µg/L	12	24.1
Tetrachloroethylene (PCE)[3]	µg/L	5.0	10.1
Toluene	µg/L	10.0	20.1
Total Petroleum Hydrocarbons	µg/L	100	201
Trichloroethylene (TCE)	µg/L	5.0	10.1
Xylene	µg/L	10.0	20.1
1,1-Dichloroethane (1,1-DCA)	µg/L	5.0	10.1
1,1-Dichloroethylene (1,1-DCE)	µg/L	6.0	12.1
1,2,3-Trichloropropane (1,2,3-TCP)	µg/L	0.5	1.01
Cis-1,2- Dichloroethylene	µg/L	6.0	12.1

2. The pH of the discharge shall be within 6 and 9 units.

3. There shall be no visible oil or grease in the discharge.

4. There shall be no run off of treated groundwater applied to land to surface water.

V. RECEIVING WATER LIMITATIONS

A. Surface Water Limitations

1. Receiving water limitations are based upon water quality objectives contained in the Basin Plan. As such, they are a required part of this Order. The discharge shall not cause the following in San Diego Creek/Newport Bay or tributaries thereto:

   a. Coloration of the receiving waters that causes a nuisance or adversely affects beneficial uses. The natural color of fish, shellfish or other inland, bay and estuarine water resources used for human consumption shall not be impaired.

---

[3] Tetrachloroethylene is synonymous to percholorethylene.

b. Deposition of oil, grease, wax or other materials in the receiving waters in concentrations that result in a visible film or in coating objects in the water, or which cause a nuisance or adversely affect beneficial uses.

c. An increase in the amounts of suspended or settleable solids in the receiving waters that will cause a nuisance or adversely affect beneficial uses as a result of controllable water quality factors.

d. Taste or odor producing substances in the receiving waters at concentrations that cause a nuisance or adversely affect beneficial uses.

e. The presence of radioactive materials in the receiving waters in concentrations that is deleterious to human, plant or animal life.

f. The depletion of the dissolved oxygen concentration below 5.0 mg/l.

g. The temperature of the receiving waters to be raised above 90°F (32°C) during the period of June through October, or above 78°F (26°C) during the rest of the year.

h. The concentration of pollutants in the water column, sediments, or biota to adversely affect the beneficial uses of the receiving water. The discharge shall not result in the degradation of inland surface water communities and populations, including vertebrate, invertebrate, and plant species.

2. The discharge of wastes shall not cause a violation of any applicable water quality standards for receiving waters adopted by the Regional Water Board or State Water Board, as required by the Clean Water Act and regulations adopted thereunder.

3. Pollutants not specifically mentioned and limited in this Order shall not be discharged at levels that will bioaccumulate in aquatic resources to levels, which are harmful to human health.

4. The discharge shall not cause or contribute to violations of applicable TDS objectives for the receiving waters.

B. Groundwater Limitations

1. The discharge shall not cause the underlying groundwater to be degraded, to exceed water quality objectives, unreasonably affect beneficial uses, or cause a condition of pollution or nuisance.

2. The discharge, in combination with other sources, shall not cause underlying groundwater to contain waste constituents in concentrations greater than background water quality.

VI. PROVISIONS

A. Standard Provisions

1. **Standard Provisions.** The Discharger shall comply with all Standard Provisions included in Attachment D of this Order.

2. **Regional Water Board Standard Provisions.** The Discharger shall comply with the following provisions:

   a. Neither the treatment nor the discharge of waste shall create, or threaten to create, a nuisance or pollution as defined by Section 13050 of the California Water Code.

   b. The Discharger shall conduct a Pollutant Minimization Program (PMP) when there is evidence that the priority pollutant is present in the effluent above an effluent limitation (e.g., sample results reported as detected but not quantified (DNQ) when the effluent limitation is less than the MDL, sample results from analytical methods more sensitive than those methods included in the permit, presence of whole effluent toxicity, health advisories for fish consumption, results of benthic or aquatic organism tissue sampling) and either: (i) A sample result is reported as DNQ and the effluent limitation is less than the reported ML; or (ii) A sample result is reported as ND and the effluent limitation is less than the MDL. The PMP shall include, but not be limited to, the following actions and submittals acceptable to the Regional Water Board:

      1) An annual review and semi-annual monitoring of potential sources of the reportable priority pollutant(s), which may include fish tissue monitoring and other bio-uptake sampling;

      2) Quarterly monitoring for the reportable priority pollutant(s) in the influent to the wastewater treatment system;

      3) Submittal of a control strategy designed to proceed toward the goal of maintaining concentrations of the reportable priority pollutant(s) in the effluent at or below the effluent limitation;

      4) Implementation of appropriate cost-effective control measures for the reportable priority pollutant(s), consistent with the control strategy; and

      5) An annual status report that shall be sent to the Regional Water Board including:

         a) All PMP monitoring results for the previous year;
         b) A list of potential sources of the reportable priority pollutant(s);
         c) A summary of all actions undertaken pursuant to the control strategy; and
         d) A description of actions to be taken in the following year.

c. The Discharger shall maintain a copy of this Order at the site where groundwater cleanup operation is controlled and managed so that it is available to site operating personnel at all times. Key operating personnel shall be familiar with its content.

d. The Discharger shall take all reasonable steps to minimize any adverse impact to receiving waters resulting from noncompliance with any requirements specified in this Order, including such accelerated or additional monitoring as necessary to determine the nature and impact of the noncomplying discharge.

e. The provisions of this Order are severable, and if any provision of this Order, or the application of any provisions of this Order to any circumstance, is held invalid, the application of such provision to other circumstances, and the remainder of this Order shall not be affected thereby.

f. Failure to comply with provisions or requirements of this Order, or violation of other applicable laws or regulations governing discharges from this facility, may subject the Discharger to administrative or civil liabilities, criminal penalties, and/or other enforcement remedies to ensure compliance. Additionally, certain violations may subject the Discharger to civil or criminal enforcement from appropriate local, State, or federal law enforcement entities.

g. In the event the Discharger does not comply or will be unable to comply for any reason, with any prohibition, maximum daily effluent limitation, or receiving water limitation of this Order, the Discharger shall notify the Regional Water Board by telephone (951) 782-4130 within 24 hours of having knowledge of such noncompliance, and shall confirm this notification in writing within five days, unless the Regional Water Board waives confirmation. The written notification shall state the nature, time, duration, and cause of noncompliance, and shall describe the measures being taken to remedy the current noncompliance and, prevent recurrence including, where applicable, a schedule of implementation. Other noncompliance requires written notification as above at the time of the normal monitoring report.

B. Monitoring and Reporting Program (MRP) Requirements

The Discharger shall comply with the Monitoring and Reporting Program, and future revisions thereto, in Attachment E of this Order. This monitoring and reporting program may be modified by the Executive Officer at any time during the term of this Order, and may include an increase in the number of parameters to be monitored, the frequency of the monitoring or the number and size of samples to be collected. Any increase in the number of parameters to be monitored, the frequency of the monitoring or the number and size of samples to be collected may be reduced back to the levels specified in the original monitoring and reporting program at the discretion of the Executive Officer.

C. Special Provisions

1. Reopener Provisions

a. This Order may be reopened to address any changes in State or federal plans, policies or regulations that would affect the quality requirements for the discharges.

b. This Order may be reopened to include effluent limitations for pollutants determined to be present in the discharge in concentrations that pose a reasonable potential to cause or contribute to violations of water quality objectives.

c. This Order may be reopened and modified in accordance with the requirements set forth at 40 CFR 122 and 124, to include the appropriate conditions or limits to address demonstrated effluent toxicity based on newly available information, or to implement any EPA-approved new State water quality standards applicable to effluent toxicity.

d. This Order may be reopened for modification, or revocation and reissuance, as a result of the detection of a reportable priority pollutant generated by special conditions included in this Order. These special conditions may be, but are not limited to, whole effluent toxicity, monitoring requirements, and monitoring for surrogate parameters. Additional requirements may be included in this Order as a result of the special condition monitoring data.

2. Special Studies, Technical Reports and Additional Monitoring Requirements

a. When immediate compliance with the Total Recoverable Selenium limits specified in IV. Effluent Limitations and Discharge Specifications, A.1.a. is infeasible, the Discharger shall submit quarterly progress reports to describe the progress of studies and/or actions undertaken to reduce selenium in the effluent, and to achieve compliance with the requirements of this Order. This includes actions taken pursuant to an approved BMP and Pollution Prevention Plan (See VI.C.3. "Best Management Practices and Pollution Prevention", below), and actions taken pursuant to any approved selenium offset program. The Discharger shall submit this report together with the Quarterly Report required in Attachment E. Provided that the Discharger becomes and remains a member of the Nitrogen and Selenium Management Program (NSMP) Working Group, which is implementing a Work Plan that includes investigations of nitrogen and selenium sources and controls in the San Diego Creek Watershed, reports prepared and submitted pursuant to the NSMP shall constitute compliance with this requirement.

b. The Discharger shall implement the nitrogen or selenium offset programs upon approval by the Executive Officer.

3. Best Management Practices and Pollution Prevention

a. The Discharger shall identify and assess selenium, nitrogen and TDS control and reduction BMPs, including volume-reduction techniques. By June 30, 2006, the Discharger shall submit for approval by the Executive Officer a proposed plan and schedule for identifying, evaluating and implementing these BMPs. The BMP evaluation shall include consideration of potential positive and negative impacts that may result

from the BMPs. The schedule shall reflect the shortest practicable time frame for the completion of the identified tasks. The Discharger shall implement the plan upon approval by the Executive Officer.

4. Compliance Schedules

a. Provided that the Discharger complies with the requirements specified in IV. Effluent Limitations and Discharge Specifications, A.1.b, compliance with final effluent limitations for selenium shall be achieved as soon as possible but no later than December 21, 2009. Should a practicable selenium treatment technology become available, the Discharger shall comply with the final selenium effluent limitations within one year from the date of notification by the Regional Water Board of the availability of said selenium treatment technology, but in no case later than December 21, 2009.

b. Nitrogen or selenium offset programs implemented by the Discharger to comply with the requirements of this Order shall be completed by December 31, 2007 and December 21, 2009, respectively.

5. Construction, Operation and Maintenance Specifications

a. The Discharger shall provide safeguards to assure that should there be reduction, loss, or failure of electric power, the Discharger will comply with the requirements of this Order.

b. The Discharger shall update as necessary, the "Operation and Maintenance Manual (O&M Manual)" which it has developed for each treatment facility to conform to latest plant changes and requirements. The O&M Manual shall be readily available to operating personnel onsite. The O&M Manual shall include the following:

1) Description of the treatment plant table of organization showing the number of employees, duties and qualifications and plant attendance schedules (daily, weekends and holidays, part-time, etc). The description should include documentation that the personnel are knowledgeable and qualified to operate the treatment facility so as to achieve the required level of treatment at all times.
2) Detailed description of safe and effective operation and maintenance of treatment processes, process control instrumentation and equipment.
3) Description of laboratory and quality assurance procedures.
4) Process and equipment inspection and maintenance schedules.
5) Description of safeguards to assure that, should there be reduction, loss, or failure of electric power, the Discharger will be able to comply with requirements of this Order.
6) Description of preventive (fail-safe) and contingency (response and cleanup) plans for controlling accidental discharges, and for minimizing the effect of such events. These plans shall identify the possible sources (such as loading and storage areas, power outage, waste treatment unit failure, process equipment failure, tank and piping failure) of accidental discharges, untreated or partially treated waste bypass, and polluted drainage.

6. Other Special Provisions

a. The Discharger may achieve compliance with the nitrogen limitations of this Order by the development and implementation of an offset program approved by the Regional Water Board's Executive Officer. Any such offset program shall (1) assure the loading of total nitrogen to Peters Canyon Wash and San Diego Creek as the result of groundwater dewatering discharges does not exceed that allowed pursuant to the effluent limits in this Order, i.e., the 50% total nitrogen mass reduction requirements specified in IV.A.1.d., or the total nitrogen limitations specified in IV.A.1.a, whichever is more stringent, and (2) shall be completed as soon as possible but no later than December 31, 2007.

b. If the Discharger does not become or does not remain a member of the NSMP Working Group and all other conditions specified in IV. Effluent Limitation and Discharge Specifications A.1.b., above, are not satisfied, and if the Discharger demonstrates that immediate compliance with the Total Recoverable Selenium limits in IV.A.1.a. is infeasible, the Discharger shall either:

   i. Cease or not commence discharges until compliance with the Total Recoverable Selenium limits in IV. A.1.a. can be achieved; or,
   ii. Proceed to identify and implement a selenium offset program as follows:

      1) Within 120 days of the adoption of this Order or by August 18, 2006, the Discharger shall submit for approval a plan and schedule to offset selenium discharges in excess of those allowed pursuant to the effluent limitations of this Order. The plan/schedule is to reflect the shortest practicable time necessary to provide the offset. In no case shall the schedule for completion of the offset exceed December 21, 2009. The plan shall address offset of selenium discharges that take place while the offset plan is developed and approved.
      2) Collect data on flow and selenium quality to assure that ongoing selenium discharges are properly accounted for and offset pending development, approval and implementation of the offset plan; and
      3) Implement the offset plan/schedule upon approval by the Executive Officer.
      4) Notwithstanding the implementation of an approved offset selenium offset program, should a practicable selenium treatment technology become available, the Discharger shall comply with the final selenium effluent limitations in IV.A.1.a. within one year from the date of notification by the Regional Water Board of the availability of said selenium treatment technology but in no case later than December 21, 2009. The offset program shall be revised if and as necessary to reflect compliance with the selenium limits but shall continue to assure that selenium discharges that took place in excess of the selenium limits are appropriately offset. Any approved amended offset program shall be implemented upon approval by the Executive Officer.

c. Revisions to an approved selenium offset program that is approved by the Executive Officer but is not fully implemented may be made at the discretion of the Executive Officer in response to revisions to this Order to address revised selenium criteria and/or approved revisions to the selenium TMDL for the San Diego Creek/Newport Bay watershed.

d. The following constitute elements of the Work Plan administered by the NSMP Working Group, along with target completion dates. In each case, the element of the Work Plan shall be completed by the Working Group as soon as possible but no later than the target completion date shown. The Executive Officer is authorized to revise these target completion dates if demonstrated to be necessary and appropriate:

1) Manage the Work Plan with input from identified technical experts, relevant regulatory agencies and the public (through completion of all elements of the Work Plan);
2) Perform complementary monitoring and assessment of selenium and nutrient sources in the watershed, utilizing, in part, ongoing selenium and nutrient studies performed by others (12/20/2008);
3) Identify and assess selenium treatment technologies, including potential future technologies (3/31/2006);
4) Identify and assess selenium BMPs (including volume-reduction techniques) (2/28/2006);
5) Facilitate demonstration testing of identified selenium treatment technologies and BMPs (3/31/2007);
6) Develop a draft selenium offset, trading or mitigation program based upon the outcome of complementary monitoring, treatment technology and BMP-related Work Plan elements and submit to Executive Officer for review (6/20/2009);
7) Implement the final selenium offset, trading or mitigation program upon the Executive Officer's approval, but no later than 12/20/2009;
8) Evaluate nutrient TMDL, including load/wasteload allocations and reduction targets (focusing particularly on groundwater-related sources, loadings and reductions)(11/7/2006);
9) Develop a draft nutrient offset, trading or mitigation program based upon the outcome of complementary monitoring and TMDL assessment Work Plan elements (6/20/2009);
10) Implement the final nutrient offset, trading or mitigation program upon the Executive Officer's approval but no later than 12/20/2009; and,
11) Develop a recommended selenium site-specific objective for the Newport Bay/San Diego Creek watershed if appropriate based upon outcome of other Work Plan elements (commencement date, if necessary, of 12/20/2006, with completion date of 6/17/2009.

e. All treatment facility startup and operation instruction manuals shall be maintained and available to operating personnel at the site where groundwater cleanup operation is controlled and managed.

VII. COMPLIANCE DETERMINATION

Compliance with the effluent limitations contained in Section IV of this Order will be determined as specified below:

A. General.
Compliance with effluent limitations for priority pollutants shall be determined using sample reporting protocols defined in the MRP of this Order. Dischargers shall be deemed out of compliance with effluent limitations if the concentration of the monitoring sample is greater than the effluent limitation and greater than or equal to the reporting level (RL).

B. Multiple Sample Data.
When determining compliance with an AMEL for priority pollutants and more than one sample result is available in a month, the Discharger shall compute the arithmetic mean unless the data set contains one or more reported determinations of "Detected, but Not Quantified" (DNQ) or "Not Detected" (ND). In those cases, the Discharger shall compute the median in place of the arithmetic mean in accordance with the following procedure:

1. The data set shall be ranked from low to high, ranking the reported ND determinations lowest, DNQ determinations next, followed by quantified values (if any). The order of the individual ND or DNQ determinations is unimportant.

2. The median value of the data set shall be determined. If the data set has an odd number of data points, then the median is the middle value. If the data set has an even number of data points, then the median is the average of the two values around the middle unless one or both of the points are ND or DNQ, in which case the median value shall be the lower of the two data points where DNQ is lower than a value and ND is lower than DNQ.

C. Effect of Conducting a Pollutant Minimization Program (PMP).
If a sample result for a priority pollutant, or the arithmetic mean or median of multiple sample results is below the RL, and there is evidence that the priority pollutant is present in the effluent above an effluent limitation <u>and</u> the Discharger conducts a PMP for the priority pollutant (as described in Provision VI.C.3), the Discharger shall <u>not</u> be deemed out of compliance.

D. Average Monthly Effluent Limitation (AMEL).
If the average of daily discharges over a calendar month exceeds the AMEL for a given parameter, an alleged violation will be flagged and the Discharger will be considered out of compliance for each day of that month for that parameter (e.g., resulting in 31 days of non-compliance in a 31-day month). The average of daily discharges over the calendar month that exceeds the AMEL for a parameter will be considered out of compliance for that month only. If only a single sample is taken during the calendar month and the analytical result for that sample exceeds the AMEL, the Discharger will be considered out of compliance for that calendar month. For any one calendar month during which no sample (daily discharge) is taken, no compliance determination can be made for that calendar month.

E. Average Weekly Effluent Limitation (AWEL). Not Applicable

F. Maximum Daily Effluent Limitation (MDEL).
If a daily discharge exceeds the MDEL for a given parameter, an alleged violation will be flagged and the Discharger will be considered out of compliance for that parameter for that 1 day only within the reporting period. For any 1 day during which no sample is taken, no compliance determination can be made for that day.

G. Instantaneous Minimum Effluent Limitation.
If the analytical result of a single grab sample is lower than the instantaneous minimum effluent limitation for a parameter, a violation will be flagged and the Discharger will be considered out of compliance for that parameter for that single sample. Non-compliance for each sample will be considered separately (e.g., the results of two grab samples taken within a calendar day that both are lower than the instantaneous minimum effluent limitation would result in two instances of non-compliance with the instantaneous minimum effluent limitation).

H. Instantaneous Maximum Effluent Limitation.
If the analytical result of a single grab sample is higher than the instantaneous maximum effluent limitation for a parameter, a violation will be flagged and the Discharger will be considered out of compliance for that parameter for that single sample. Non-compliance for each sample will be considered separately (e.g., the results of two grab samples taken within a calendar day that both exceed the instantaneous maximum effluent limitation would result in two instances of non-compliance with the instantaneous maximum effluent limitation).

I. One Sample Analysis
Compliance determinations shall be based on available analyses for the time interval associated with the effluent limitation. Where only one sample analysis is available in a specified time interval (e.g., monthly or weekly average), that sample shall serve to characterize the discharge for the entire interval. If quarterly sample results show noncompliance with the average monthly limit and that sample result is used for compliance determinations for each month of the quarter, then three separate violations of the average monthly limit shall be deemed to have occurred.

J. Single Sample Vs. Group of Chemicals
Compliance with a single effluent limitation which applies to a group of chemicals (e.g., PCBs), based on a single sample shall be determined by considering the concentrations of individual members of the group to be zero if the analytical response for the individual chemical falls below the method detection limit (MDL or PQL) for that chemical.

K. Priority Pollutants.
For priority pollutants, the Discharger shall be deemed out of compliance with an effluent limitation if the concentration of the priority pollutant in the monitoring sample is greater than the effluent limitation.

Compliance determination shall be based on the minimum level (ML)[4] specified in Attachment "E" of this Order, unless an alternative minimum level is approved by the Regional Water Board's Executive Officer. When there is more than one ML value for a given substance, the Discharger shall select the ML value that is below the calculated effluent limitation, and use its associated analytical method, listed in Attachment "E" of the M&RP. If no ML value is below the effluent limitation, then the Regional Water Board will select the lowest ML value and its associated analytical method.

L. Non-Priority Pollutants.

For non-priority pollutants, the discharge shall be considered to be in compliance with an effluent limitation, which is less than or equal to the PQL specified in Attachment "I" of this Order if the arithmetic mean of all test results for the monitoring period is less than the constituent effluent limitation. Analytical results that are less than the specified PQL shall be assigned a value of zero.

M. Selenium Limits.

1. For Working Group Members:

Provided that the Work Plan commitments and the requirements of Discharge Specifications IV.A.1.b. are satisfied, completion of the approved Work Plan and implementation of the offset/trading/mitigation program identified by the Working Group and approved by the Executive Officer shall constitute compliance with the numeric limitations specified in Discharge Specification IV.A.1.a. However, should a practicable selenium treatment technology become available, the Discharger shall comply with the numeric selenium limitations specified in Discharge Specifications IV.A.1.a. as soon as reasonably possible, as determined by the Executive Officer, but in no case later than one year from the date of notification by the Regional Water Board of the availability of said selenium treatment technology (see also VI.C.4.a.).

With regard to the selenium contained in the discharges subject to this Order by the Discharger as a NSMP Working Group member, compliance with the requirements specified in IV.A.1.b. also satisfies the requirements contained in Discharge Prohibitions III.D., Receiving Water Limitations V.A.1.h. and V.A.2.; and Provision VI.A.2.a.

2. For Non-Working Group Members:

Completion of an approved selenium offset program as soon as possible but no later than December 21, 2009 shall constitute compliance with the numeric limitations specified in Discharge Specification IV.A.1.a..

---

[4] Minimum level is the concentration at which the entire analytical system must give a recognizable signal and acceptable point. The ML is the concentration in a sample that is equivalent to the concentration of the lowest calibration standard analyzed by a specific analytical procedure, assuming that all the method specified sample weights, volumes, and processing steps have been followed.

With regard to the selenium contained in the discharges subject to this Order by the Discharger as a non-NSMP Working Group member, compliance with the requirements specified in IV.A.1.c., VI. C. 2, VI C.3., VI C. 4. b., and VI C.6.b. also satisfies the requirements contained in Discharge Prohibitions III.D., Receiving Water Limitations V.A.1.h. and V.A.2.; and Provision VI.A.2.a.

M. Nitrogen Limits.

The Discharger will also be deemed in compliance with the requirements of Receiving Water Limitations V.A.1.h. and V.A.2., when the Discharger is either in compliance with the nitrogen limit specified in Discharge Specifications IV.A.1.a. and IV.A.1.d. or when Discharger implements an acceptable offset program for nitrogen discharges.

ATTACHMENT A – DEFINITIONS

Average Monthly Effluent Limitation (AMEL): the highest allowable average of daily discharges over a calendar month, calculated as the sum of all daily discharges measured during a calendar month divided by the number of daily discharges measured during that month.

Average Weekly Effluent Limitation (AWEL): the highest allowable average of daily discharges over a calendar week (Sunday through Saturday), calculated as the sum of all daily discharges measured during a calendar week divided by the number of daily discharges measured during that week.

Best Management Practices (BMPs) are methods, measures, or practices designed and selected to reduce or eliminate the discharge of pollutants to surface waters from point and nonpoint source discharges including storm water. BMPs include structural and non-structural controls, and operation and maintenance procedures, which can be applied before, during, and/or after pollution producing activities.

Daily Discharge: Daily Discharge is defined as either: (1) the total mass of the constituent discharged over the calendar day (12:00 am through 11:59 pm) or any 24-hour period that reasonably represents a calendar day for purposes of sampling (as specified in the permit), for a constituent with limitations expressed in units of mass or; (2) the unweighted arithmetic mean measurement of the constituent over the day for a constituent with limitations expressed in other units of measurement (e.g., concentration).

The daily discharge may be determined by the analytical results of a composite sample taken over the course of one day (a calendar day or other 24-hour period defined as a day) or by the arithmetic mean of analytical results from one or more grab samples taken over the course of the day.

For composite sampling, if 1 day is defined as a 24-hour period other than a calendar day, the analytical result for the 24-hour period will be considered as the result for the calendar day in which the 24-hour period ends.

Instantaneous Maximum Effluent Limitation: the highest allowable value for any single grab sample or aliquot (i.e., each grab sample or aliquot is independently compared to the instantaneous maximum limitation).

Instantaneous Minimum Effluent Limitation: the lowest allowable value for any single grab sample or aliquot (i.e., each grab sample or aliquot is independently compared to the instantaneous minimum limitation).

Maximum Daily Flow is the maximum flow sample of all samples collected in a calendar day.

Maximum Daily Effluent Limitation (MDEL) means the highest allowable daily discharge of a pollutant, over a calendar day (or 24-hour period). For pollutants with limitations expressed in units of mass, the daily discharge is calculated as the total mass of the pollutant discharged over the day. For pollutants with limitations expressed in other units of measurement, the daily discharge is calculated as the arithmetic mean measurement of the pollutant over the day.

Method Detection Limit (MDL) is the minimum concentration of a substance that can be measured and reported with 99 percent confidence that the analyte concentration is greater than zero, as defined in 40 CFR 136, Appendix B, revised as of May 14, 1999.

Minimum Level (ML) is the concentration at which the entire analytical system must give a recognizable signal and acceptable calibration point. The ML is the concentration in a sample that is equivalent to the concentration of the lowest calibration standard analyzed by a specific analytical procedure, assuming that all the method specified sample weights, volumes, and processing steps have been followed.

Mixing Zone is a limited volume of receiving water that is allocated for mixing with a wastewater discharge where water quality criteria can be exceeded without causing adverse effects to the overall water body.

Pollution Prevention means any action that causes a net reduction in the use or generation of a hazardous substance or other pollutant that is discharged into water and includes, but is not limited to, input change, operational improvement, production process change, and product reformulation (as defined in Water Code Section 13263.3). Pollution prevention does not include actions that merely shift a pollutant in wastewater from one environmental medium to another environmental medium, unless clear environmental benefits of such an approach are identified to the satisfaction of the State Water Board or Regional Water Board.

Toxicity Reduction Evaluation (TRE) is a study conducted in a step-wise process designed to identify the causative agents of effluent or ambient toxicity, isolate the sources of toxicity, evaluate the effectiveness of toxicity control options, and then confirm the reduction in toxicity. The first steps of the TRE consist of the collection of data relevant to the toxicity, including additional toxicity testing, and an evaluation of facility operations and maintenance practices, and best management practices. A Toxicity Identification Evaluation (TIE) may be required as part of the TRE, if appropriate. (A TIE is a set of procedures to identify the specific chemical(s) responsible for toxicity. These procedures are performed in three phases (characterization, identification, and confirmation) using aquatic organism toxicity tests.)

ATTACHMENT B – TOPOGRAPHIC MAP

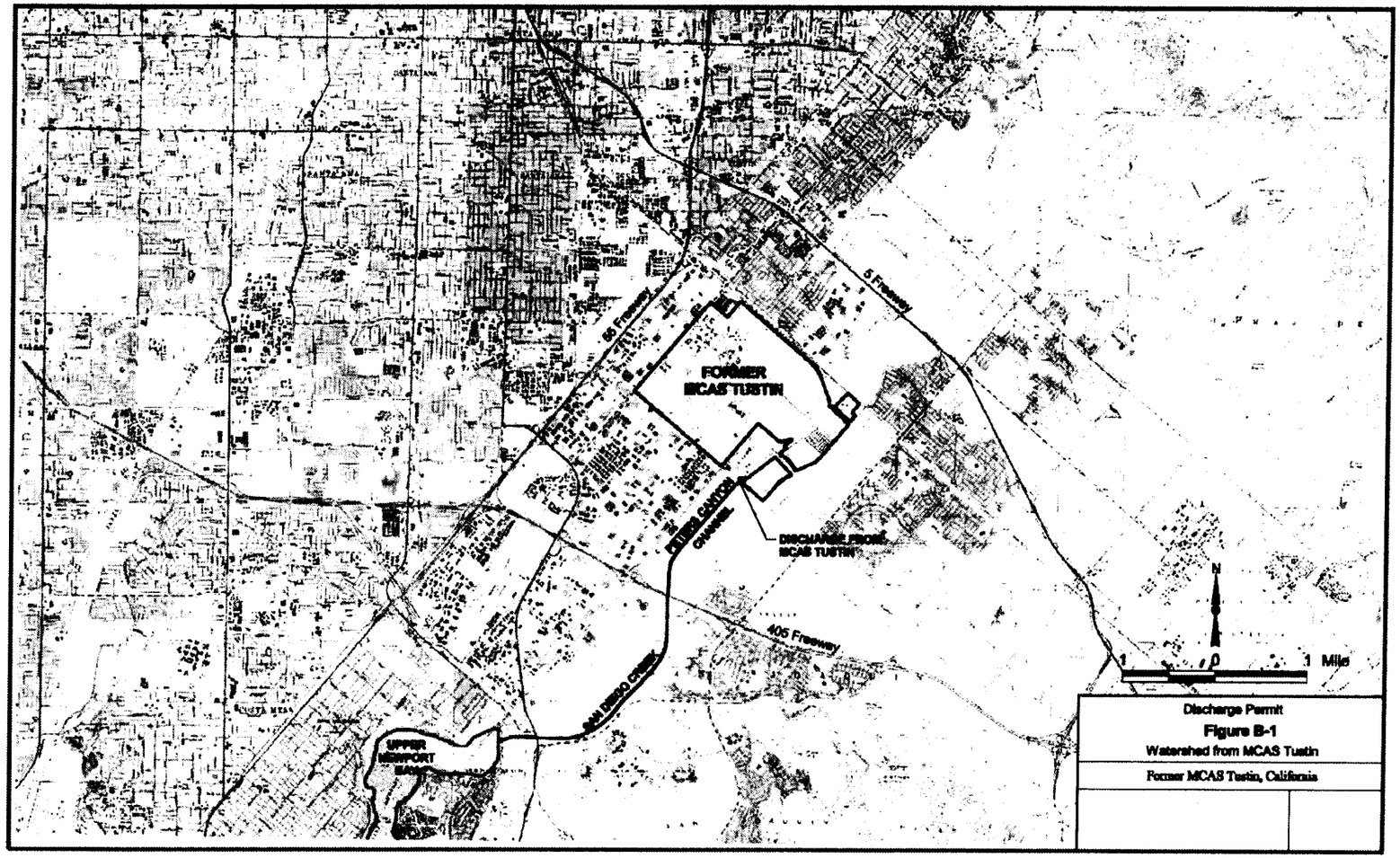

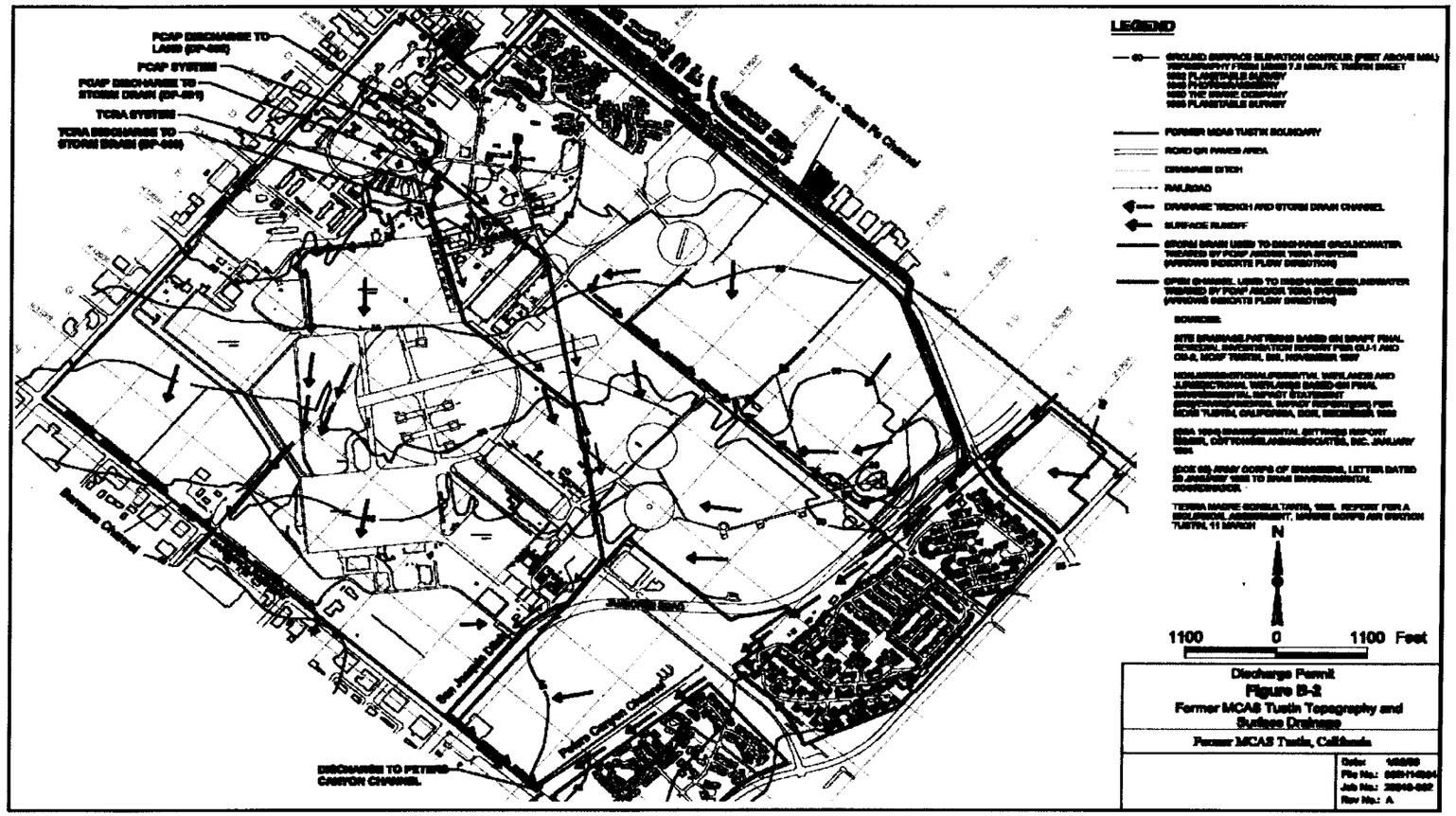
LEGEND
N
1100
0
1100 Feet
Discharge Permit
Figure B-2
Former MCAS Tustin Topography and Surface Drainage
Former MCAS Tustin, California

ATTACHMENT C – FLOW SCHEMATIC

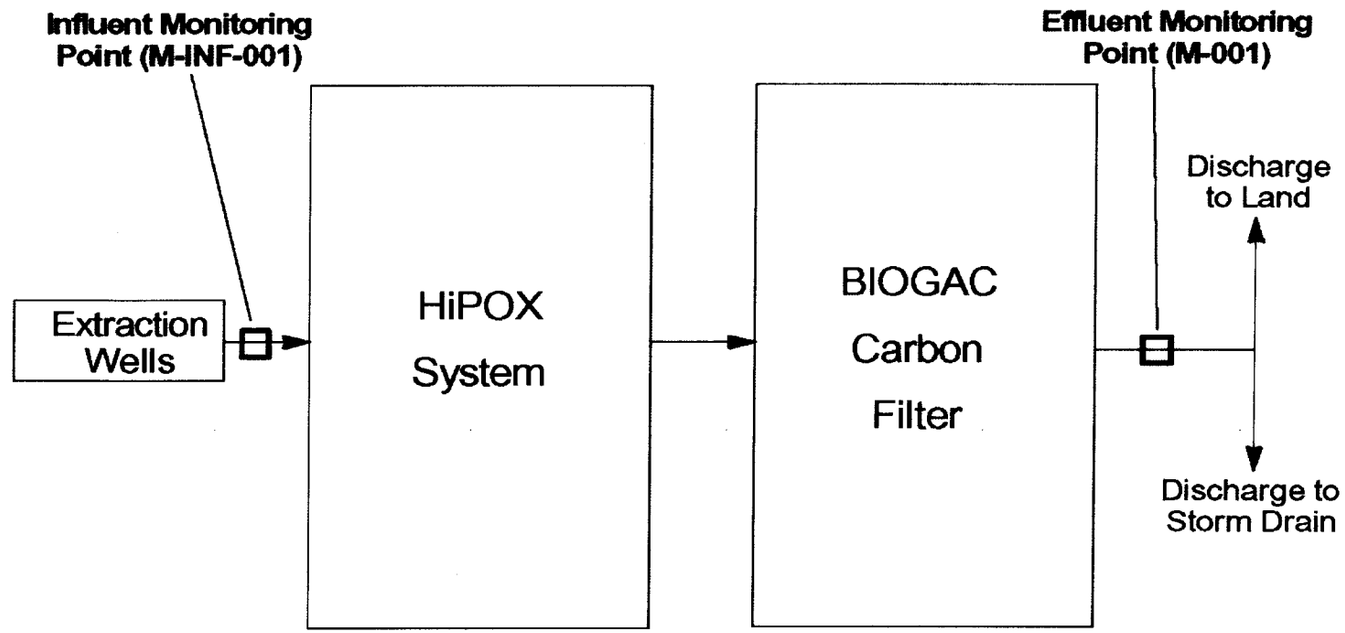

Note: The PCAP System does not have an internal or midfluent sampling point.

Figure C-1

PCAP Schematic with Monitoring Points

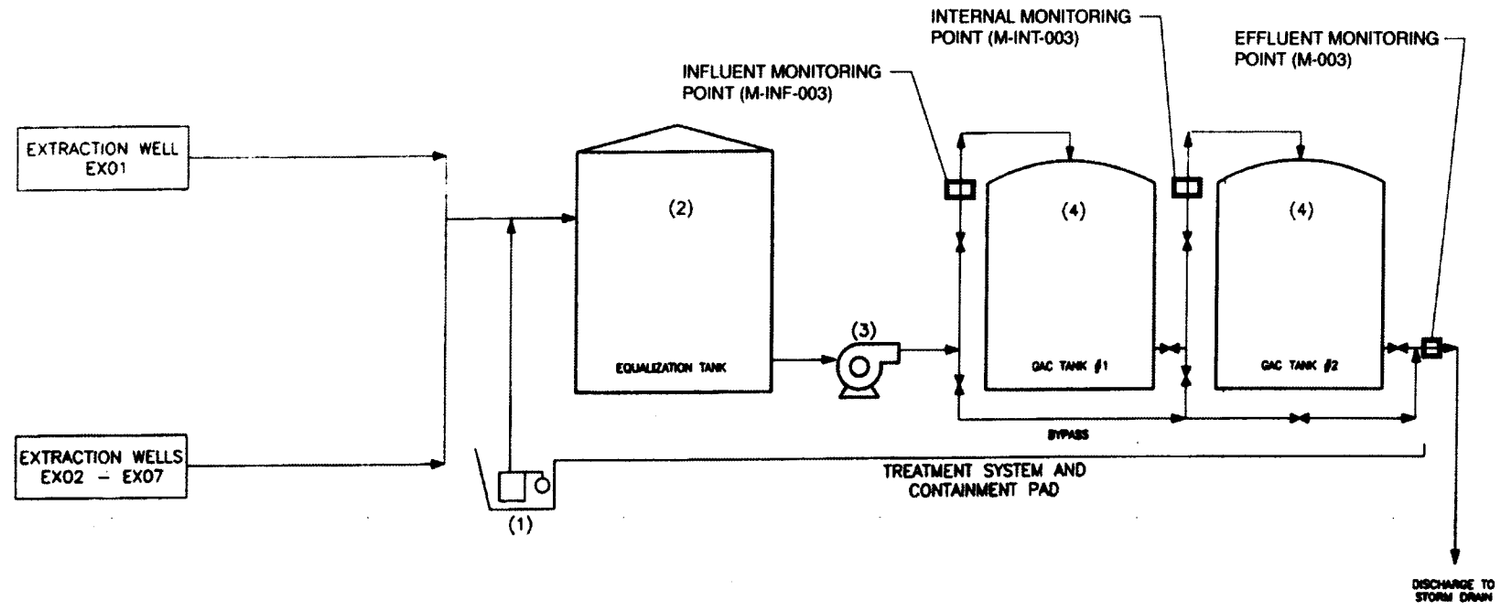

PROCESS FLOW DIAGRAM
TCRA SYSTEM

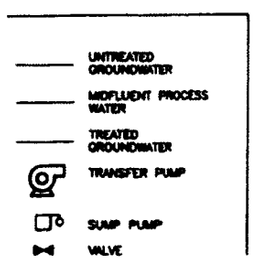

NOTES:
(1) SUMP & PUMP – RETURN TO EQUALIZATION TANK
(2) EQUALIZATION TANK WITH CONTROLLER
(3) TRANSFER PUMP – CONTROLLED BY EQUALIZATION TANK LEVEL
(4) 2,000 LB GRANULAR ACTIVATED CARBON TANKS CURRENTLY CONFIGURED IN SERIES

Figure C-2
TCRA Schematic with Monitoring Points

ATTACHMENT D –STANDARD PROVISIONS

I. STANDARD PROVISIONS – PERMIT COMPLIANCE

A. Duty to Comply

1. The Discharger must comply with all of the conditions of this Order. Any noncompliance constitutes a violation of the Clean Water Act (CWA) and the California Water Code (CWC) and is grounds for enforcement action, for permit termination, revocation and reissuance, or modification, or denial of a permit renewal application [*40 CFR Section 122.41(a)*].

2. The Discharger shall comply with effluent standards or prohibitions established under Section 307(a) of the CWA for toxic pollutants and with standards for sewage sludge use or disposal established under Section 405(d) of the CWA within the time provided in the regulations that establish these standards or prohibitions, even if this Order has not yet been modified to incorporate the requirement [*40 CFR §122.41(a)(1)*].

B. Need to Halt or Reduce Activity Not a Defense

It shall not be a defense for a Discharger in an enforcement action that it would have been necessary to halt or reduce the permitted activity in order to maintain compliance with the conditions of this Order [*40 CFR §122.41(c)*].

C. Duty to Mitigate

The Discharger shall take all reasonable steps to minimize or prevent any discharge or sludge use or disposal in violation of this Order that has a reasonable likelihood of adversely affecting human health or the environment [*40 CFR §122.41(d)*].

D. Proper Operation and Maintenance

The Discharger shall at all times properly operate and maintain all facilities and systems of treatment and control (and related appurtenances) which are installed or used by the Discharger to achieve compliance with the conditions of this Order. Proper operation and maintenance also includes adequate laboratory controls and appropriate quality assurance procedures. This provision requires the operation of backup or auxiliary facilities or similar systems that are installed by a Discharger only when necessary to achieve compliance with the conditions of this Order [*40 CFR §122.41(e)*].

E. Property Rights

1. This Order does not convey any property rights of any sort or any exclusive privileges [*40 CFR §122.41(g)*].

2. The issuance of this Order does not authorize any injury to persons or property or invasion of other private rights, or any infringement of State or local law or regulations [*40 CFR §122.5(c)*].

F. Inspection and Entry

The Discharger shall allow the Regional Water Quality Control Board (Regional Water Board), State Water Resources Control Board (State Water Board), United States Environmental Protection Agency (USEPA), and/or their authorized representatives (including an authorized contractor acting as their representative), upon the presentation of credentials and other documents, as may be required by law, to [*40 CFR §122.41(i)*] [*CWC 13383(c)*]:

1. Enter upon the Discharger's premises where a regulated facility or activity is located or conducted, or where records are kept under the conditions of this Order [*40 CFR §122.41(i)(1)*];

2. Have access to and copy, at reasonable times, any records that must be kept under the conditions of this Order [*40 CFR §122.41(i)(2)*];

3. Inspect and photograph, at reasonable times, any facilities, equipment (including monitoring and control equipment), practices, or operations regulated or required under this Order [*40 CFR §122.41(i)(3)*];

4. Sample or monitor, at reasonable times, for the purposes of assuring Order compliance or as otherwise authorized by the CWA or the CWC, any substances or parameters at any location [*40 CFR §122.41(i)(4)*].

G. Bypass

1. Definitions

   a. "Bypass" means the intentional diversion of waste streams from any portion of a treatment facility [*40 CFR §122.41(m)(1)(i)*].

   b. "Severe property damage" means substantial physical damage to property, damage to the treatment facilities, which causes them to become inoperable, or substantial and permanent loss of natural resources that can reasonably be expected to occur in the absence of a bypass. Severe property damage does not mean economic loss caused by delays in production [*40 CFR §122.41(m)(1)(ii)*].

2. Bypass not exceeding limitations – The Discharger may allow any bypass to occur which does not cause exceedances of effluent limitations, but only if it is for essential maintenance to assure efficient operation. These bypasses are not subject to the provisions listed in Standard Provisions – Permit Compliance I.G.3, I.G.4, and I.G.5 below [*40 CFR §122.41(m)(2)*].

3. Prohibition of bypass – Bypass is prohibited, and the Regional Water Board may take enforcement action against a Discharger for bypass, unless [*40 CFR §122.41(m)(4)(i)*]:

   a. Bypass was unavoidable to prevent loss of life, personal injury, or severe property damage [*40 CFR §122.41(m)(4)(A)*];

b. There were no feasible alternatives to the bypass, such as the use of auxiliary treatment facilities, retention of untreated wastes, or maintenance during normal periods of equipment downtime. This condition is not satisfied if adequate back-up equipment should have been installed in the exercise of reasonable engineering judgment to prevent a bypass that occurred during normal periods of equipment downtime or preventive maintenance [*40 CFR §122.41(m)(4)(B)*]; and

c. The Discharger submitted notice to the Regional Water Board as required under Standard Provisions – Permit Compliance I.G.5 below [*40 CFR §122.41(m)(4)(C)*].

4. The Regional Water Board may approve an anticipated bypass, after considering its adverse effects, if the Regional Water Board determines that it will meet the three conditions listed in Standard Provisions – Permit Compliance I.G.3 above [*40 CFR §122.41(m)(4)(ii)*].

5. Notice

a. Anticipated bypass. If the Discharger knows in advance of the need for a bypass, it shall submit a notice, if possible at least 10 days before the date of the bypass [*40 CFR §122.41(m)(3)(i)*].

b. Unanticipated bypass. The Discharger shall submit notice of an unanticipated bypass as required in Standard Provisions - Reporting V.E below (24-hour notice) [*40 CFR §122.41(m)(3)(ii)*].

H. Upset

Upset means an exceptional incident in which there is unintentional and temporary noncompliance with technology based permit effluent limitations because of factors beyond the reasonable control of the permittee. An upset does not include noncompliance to the extent caused by operational error, improperly designed treatment facilities, inadequate treatment facilities, lack of preventive maintenance, or careless or improper operation [*40 CFR §122.41(n)(1)*].

1. Effect of an upset. An upset constitutes an affirmative defense to an action brought for noncompliance with such technology based permit effluent limitations if the requirements of Standard Provisions – Permit Compliance I.H.2 below are met. No determination made during administrative review of claims that noncompliance was caused by upset, and before an action for noncompliance, is final administrative action subject to judicial review [*40 CFR §122.41(n)(2)*].

2. Conditions necessary for a demonstration of upset. A Discharger who wishes to establish the affirmative defense of upset shall demonstrate, through properly signed, contemporaneous operating logs or other relevant evidence that [*40 CFR §122.41(n)(3)*]:

a. An upset occurred and that the Discharger can identify the cause(s) of the upset [*40 CFR §122.41(n)(3)(i)*];

b. The permitted facility was, at the time, being properly operated [*40 CFR §122.41(n)(3)(i)*];

c. The Discharger submitted notice of the upset as required in Standard Provisions – Reporting V.E.2.b below (24-hour notice) [*40 CFR §122.41(n)(3)(iii)*]; and

d. The Discharger complied with any remedial measures required under Standard Provisions – Permit Compliance I.C above [*40 CFR §122.41(n)(3)(iv)*].

3. Burden of proof. In any enforcement proceeding, the Discharger seeking to establish the occurrence of an upset has the burden of proof [*40 CFR §122.41(n)(4)*].

II. STANDARD PROVISIONS – PERMIT ACTION

A. General

This Order may be modified, revoked and reissued, or terminated for cause. The filing of a request by the Discharger for modification, revocation and reissuance, or termination, or a notification of planned changes or anticipated noncompliance does not stay any Order condition [*40 CFR §122.41(f)*].

B. Duty to Reapply

If the Discharger wishes to continue an activity regulated by this Order after the expiration date of this Order, the Discharger must apply for and obtain a new permit [*40 CFR §122.41(b)*].

C. Transfers

This Order is not transferable to any person except after notice to the Regional Water Board. The Regional Water Board may require modification or revocation and reissuance of the Order to change the name of the Discharger and incorporate such other requirements as may be necessary under the CWA and the CWC [*40 CFR §122.41(l)(3)*] [*40 CFR §122.61*].

III. STANDARD PROVISIONS – MONITORING

A. Samples and measurements taken for the purpose of monitoring shall be representative of the monitored activity [*40 CFR §122.41(j)(1)*].

B. Monitoring results must be conducted according to test procedures under 40 CFR Part 136 or, in the case of sludge use or disposal, approved under 40 CFR Part 136 unless otherwise specified in 40 CFR Part 503 unless other test procedures have been specified in this Order [*40 CFR §122.41(j)(4)*] [*40 CFR §122.44(i)(1)(iv)*].

IV. STANDARD PROVISIONS – RECORDS

A. Except for records of monitoring information required by this Order related to the Discharger's sewage sludge use and disposal activities, which shall be retained for a period of at least five years (or longer as required by 40 CFR Part 503), the Discharger shall retain records of all monitoring information, including all calibration and maintenance records and all original strip chart recordings for continuous monitoring instrumentation, copies of all reports required by this Order, and records of all data used to complete the application for this Order, for a period of at least three (3) years from the date of the sample, measurement, report or application. This period may be extended by request of the Regional Water Board Executive Officer at any time [*40 CFR §122.41(j)(2)*].

B. Records of monitoring information shall include:

1. The date, exact place, and time of sampling or measurements [*40 CFR §122.41(j)(3)(i)*];
2. The individual(s) who performed the sampling or measurements [*40 CFR §122.41(j)(3)(ii)*];
3. The date(s) analyses were performed [*40 CFR §122.41(j)(3)(iii)*];
4. The individual(s) who performed the analyses [*40 CFR §122.41(j)(3)(iv)*];
5. The analytical techniques or methods used [*40 CFR §122.41(j)(3)(v)*]; and
6. The results of such analyses [*40 CFR §122.41(j)(3)(vi)*].

C. Claims of confidentiality for the following information will be denied [*40 CFR §122.7(b)*]:

1. The name and address of any permit applicant or Discharger [*40 CFR §122.7(b)(1)*]; and
2. Permit applications and attachments, permits and effluent data [*40 CFR §122.7(b)(2)*].

V. STANDARD PROVISIONS – REPORTING

A. Duty to Provide Information

The Discharger shall furnish to the Regional Water Board, State Water Board, or USEPA within a reasonable time, any information which the Regional Water Board, State Water Board, or USEPA may request to determine whether cause exists for modifying, revoking and reissuing, or terminating this Order or to determine compliance with this Order. Upon request, the Discharger shall also furnish to the Regional Water Board, State Water Board, or USEPA copies of records required to be kept by this Order [*40 CFR §122.41(h)*] [*CWC 13267*].

B. Signatory and Certification Requirements

1. All applications, reports, or information submitted to the Regional Water Board, State Water Board, and/or USEPA shall be signed and certified in accordance with Standard Provisions – Reporting V.B.2, V.B.3, V.B.4, and V.B.5 below [*40 CFR §122.41(k)*].

2. All permit applications shall be signed by either a principal executive officer or ranking elected official. For purposes of this provision, a principal executive officer of a federal agency includes: (i) the chief executive officer of the agency, or (ii) a senior executive officer having responsibility for the overall operations of a principal geographic unit of the agency (e.g., Regional Administrators of USEPA) [*40 CFR Section 122.22(a)(3)*].

3. All reports required by this Order and other information requested by the Regional Water Board, State Water Board, or USEPA shall be signed by a person described in Standard Provisions – Reporting V.B.2 above, or by a duly authorized representative of that person. A person is a duly authorized representative only if:

   a. The authorization is made in writing by a person described in Standard Provisions – Reporting V.B.2 above [*40 CFR §122.22(b)(1)*];

   b. The authorization specified either an individual or a position having responsibility for the overall operation of the regulated facility or activity such as the position of plant manager, operator of a well or a well field, superintendent, position of equivalent responsibility, or an individual or position having overall responsibility for environmental matters for the company (a duly authorized representative may thus be either a named individual or any individual occupying a named position) [*40 CFR §122.22(b)(2)*]; and

   c. The written authorization is submitted to the Regional Water Board, State Water Board, or USEPA [*40 CFR §122.22(b)(3)*].

4. If an authorization under Standard Provisions – Reporting V.B.3 above is no longer accurate because a different individual or position has responsibility for the overall operation of the facility, a new authorization satisfying the requirements of Standard Provisions – Reporting V.B.3 above must be submitted to the Regional Water Board, State Water Board or USEPA prior to or together with any reports, information, or applications, to be signed by an authorized representative [40 CFR §122.22(c)].

5. Any person signing a document under Standard Provisions – Reporting V.B.2 or V.B.3 above shall make the following certification:

   "I certify under penalty of law that this document and all attachments were prepared under my direction or supervision in accordance with a system designed to assure that qualified personnel properly gather and evaluate the information submitted. Based on my inquiry of the person or persons who manage the system or those persons directly responsible for gathering the information, the information submitted is, to the best of my knowledge and belief, true, accurate, and complete. I am aware that there are significant penalties for submitting false information, including the possibility of fine and imprisonment for knowing violations" [*40 CFR §122.22(d)*].

C. Monitoring Reports

1. Monitoring results shall be reported at the intervals specified in the Monitoring and Reporting Program (Attachment E) in this Order [*40 CFR §122.41(l)(4)*].

2. Monitoring results must be reported on a Discharge Monitoring Report (DMR) form or forms provided or specified by the Regional Water Board or State Water Board for reporting results of monitoring of sludge use or disposal practices [*40 CFR §122.41(l)(4)(i)*].

3. If the Discharger monitors any pollutant more frequently than required by this Order using test procedures approved under 40 CFR Part 136 or, in the case of sludge use or disposal, approved under 40 CFR Part 136 unless otherwise specified in 40 CFR Part 503, or as specified in this Order, the results of this monitoring shall be included in the calculation and reporting of the data submitted in the DMR or sludge reporting form specified by the Regional Water Board [*40 CFR §122.41(l)(4)(ii)*].

4. Calculations for all limitations, which require averaging of measurements, shall utilize an arithmetic mean unless otherwise specified in this Order [*40 CFR §122.41(l)(4)(iii)*].

D. Compliance Schedules

Reports of compliance or noncompliance with, or any progress reports on, interim and final requirements contained in any compliance schedule of this Order, shall be submitted no later than 14 days following each schedule date [*40 CFR §122.41(l)(5)*].

E. Twenty-Four Hour Reporting

1. The Discharger shall report any noncompliance that may endanger health or the environment. Any information shall be provided orally within 24 hours from the time the Discharger becomes aware of the circumstances. A written submission shall also be provided within five (5) days of the time the Discharger becomes aware of the circumstances. The written submission shall contain a description of the noncompliance and its cause; the period of noncompliance, including exact dates and times, and if the noncompliance has not been corrected, the anticipated time it is expected to continue; and steps taken or planned to reduce, eliminate, and prevent reoccurrence of the noncompliance [*40 CFR §122.41(l)(6)(i)*].

2. The following shall be included as information that must be reported within 24 hours under this paragraph [*40 CFR §122.41(l)(6)(ii)*]:

   a. Any unanticipated bypass that exceeds any effluent limitation in this Order [*40 CFR §122.41(l)(6)(ii)(A)*].

   b. Any upset that exceeds any effluent limitation in this Order [*40 CFR §122.41(l)(6)(ii)(B)*].

3. The Regional Water Board may waive the above-required written report under this provision on a case-by-case basis if an oral report has been received within 24 hours [*40 CFR §122.41(l)(6)(iii)*].

F. Planned Changes

The Discharger shall give notice to the Regional Water Board as soon as possible of any planned physical alterations or additions to the permitted facility. Notice is required under this provision only when [*40 CFR §122.41(l)(1)*]:

1. The alteration or addition to a permitted facility may meet one of the criteria for determining whether a facility is a new source in 40 CFR §122.29(b) [*40 CFR §122.41(l)(1)(i)*]; or

2. The alteration or addition could significantly change the nature or increase the quantity of pollutants discharged. This notification applies to pollutants which are subject neither to effluent limitations in this Order nor to notification requirements under 40 CFR Part 122.42(a)(1) (see Additional Provisions—Notification Levels VII.A.1) [*40 CFR §122.41(l)(1)(ii)*].

3. The alteration or addition results in a significant change in the Discharger's sludge use or disposal practices, and such alteration, addition, or change may justify the application of permit conditions that are different from or absent in the existing permit, including notification of additional use or disposal sites not reported during the permit application process or not reported pursuant to an approved land application plan [*40 CFR §122.41(l)(1)(iii)*].

G. Anticipated Noncompliance

The Discharger shall give advance notice to the Regional Water Board or State Water Board of any planned changes in the permitted facility or activity that may result in noncompliance with General Order requirements [*40 CFR §122.41(l)(2)]*.

H. Other Noncompliance

The Discharger shall report all instances of noncompliance not reported under Standard Provisions – Reporting V.C, V.D, and V.E above at the time monitoring reports are submitted. The reports shall contain the information listed in Standard Provision – Reporting V.E above [*40 CFR §122.41(l)(7)*].

I. Other Information

When the Discharger becomes aware that it failed to submit any relevant facts in a permit application, or submitted incorrect information in a permit application or in any report to the Regional Water Board, State Water Board, or USEPA, the Discharger shall promptly submit such facts or information [*40 CFR §122.41(l)(8)*].

VI. STANDARD PROVISIONS – ENFORCEMENT

A. The Regional Water Board is authorized to enforce the terms of this permit under several provisions of the CWC, including, but not limited to, Sections 13385, 13386, and 13387.

VII. ADDITIONAL PROVISIONS – NOTIFICATION LEVELS

A. Non-Municipal Facilities

Existing manufacturing, commercial, mining, and silvicultural dischargers shall notify the Regional Water Board as soon as they know or have reason to believe [*40 CFR §122.42(a)*]:

1. That any activity has occurred or will occur that would result in the discharge, on a routine or frequent basis, of any toxic pollutant that is not limited in this Order, if that discharge will exceed the highest of the following "notification levels" [*40 CFR §122.42(a)(1)*]:

   a. 100 micrograms per liter (μg/L) [*40 CFR §122.42(a)(1)(i)*];

   b. 200 μg/L for acrolein and acrylonitrile; 500 μg/L for 2,4-dinitrophenol and 2-methyl-4,6-dinitrophenol; and 1 milligram per liter (mg/L) for antimony [*40 CFR §122.42(a)(1)(ii)*];

   c. Five (5) times the maximum concentration value reported for that pollutant in the Report of Waste Discharge [*40 CFR §122.42(a)(1)(iii)*]; or

   d. The level established by the Regional Water Board in accordance with 40 CFR §122.44(f) [*40 CFR §122.42(a)(1)(iv)*].

2. That any activity has occurred or will occur that would result in the discharge, on a non-routine or infrequent basis, of any toxic pollutant that is not limited in this Order, if that discharge will exceed the highest of the following "notification levels" [*40 CFR §122.42(a)(2)*]:

   a. 500 micrograms per liter (μg/L) [*40 CFR §122.42(a)(2)(i)*];

   b. 1 milligram per liter (mg/L) for antimony [*40 CFR §122.42(a)(2)(ii)*];

   c. Ten (10) times the maximum concentration value reported for that pollutant in the Report of Waste Discharge [*40 CFR §122.42(a)(2)(iii)*]; or

   d. The level established by the Regional Water Board in accordance with 40 CFR §122.44(f) [*40 CFR §122.42(a)(2)(iv)*].

Attachment E – Monitoring and Reporting Program – Table of Contents

Attachment E – Monitoring and Reporting Program (MRP) E-2
I. General Monitoring Provisions E-2
A. General Monitoring Provisions E-2
B. Minimum Level (ML) Requirements E-5
II. Monitoring Locations E-5
III. Influent Monitoring Requirements E-5
A. Monitoring Location M-INF-001 and M-INF-003 ..... E-5
IV. Effluent Monitoring Requirements E-6
A. Monitoring Location M-001 and M-003 for Surface Discharge E-6
B. Minimum Frequency of Sampling & Analysis: E-7
C. Total Nitrogen and Total Recoverable Selenium Offset Monitoring and Reporting E-7
V. Whole Effluent Toxicity Testing Requirements E-8
A. Toxicity Monitoring Requirements at M-001A and M-003A E-8
VI. Land Discharge Monitoring Requirements E-9
A. Monitoring Location L-002 for Infiltration/Injection and Irrigation E-9
VII. Receiving Water Monitoring Requirements – Not Applicable E-10
VIII. Other Monitoring Requirements – Not applicable E-10
IX. Reporting Requirements E-10
A. General Monitoring and Reporting Requirements E-10
B. Self Monitoring Reports (SMRs) E-10
C. Discharge Monitoring Reports (DMRs) E-12
D. Other Reports – Not Applicable E-13

ATTACHMENT E – MONITORING AND REPORTING PROGRAM (MRP)

The Code of Federal Regulations (CFR) at 40 CFR §122.48 requires that all NPDES permits specify monitoring and reporting requirements. CWC sections 13267 and 13383 also authorize the Regional Water Quality Control Board (RWQCB) to require technical and monitoring reports. This MRP establishes monitoring and reporting requirements that implement the federal and California regulations.

I. GENERAL MONITORING PROVISIONS

A. General Monitoring Provisions

Monitoring shall be in accordance with the following:

1. All sampling and sample preservation shall be in accordance with the current edition of "*Standard Methods for the Examination of Water and Wastewater*" (American Public Health Association).

2. All laboratory analyses shall be performed in accordance with test procedures under 40 CFR 136 (revised as of May 14, 1999) *"Guidelines Establishing Test Procedures for the Analysis of Pollutants,"* promulgated by the United States Environmental Protection Agency (EPA), unless otherwise specified in this MRP. In addition, the Regional Water Board and/or EPA, at their discretion, may specify test methods that are more sensitive than those specified in 40 CFR 136. Unless otherwise specified herein, organic pollutants shall be analyzed using EPA method 8260, as appropriate.

3. Chemical, bacteriological, and bioassay analyses shall be conducted at a laboratory certified for such analyses by the California Department of Health Services in accordance with the provision of Water Code Section 13176, and must include quality assurance/quality control data with their reports, or EPA or at laboratories approved by the Regional Water Board's Executive Officer.

4. Whenever the Discharger monitors any pollutant more frequently than is required by this Order, the results of this monitoring shall be included in the calculation and reporting of the data submitted in the discharge monitoring report specified by the Executive Officer.

5. In conformance with federal regulations 40 CFR 122.45(c), analyses to determine compliance with the effluent limitations for metals shall be conducted using the total recoverable method.

6. All analytical data shall be reported with method detection limits (MDLs) and with identification of either minimum levels, practical quantitation levels (PQLs) or limits of quantitation (LOQs).

7. For non-priority pollutants monitoring, all analytical data shall be reported with identification of practical quantitation levels and with method detection limits, as determined by the procedure found in 40 CFR 136 (revised as of May 14, 1999).

8. The Discharger shall have and implement an acceptable written quality assurance (QA) plan for laboratory analyses. Duplicate chemical analyses must be conducted on a minimum of ten percent (10%) of the samples, or at least one sample per month, whichever is greater. A similar frequency shall be maintained for analyzing spiked samples. When requested by the Regional Water Board or EPA, the Discharger will participate in the NPDES discharge monitoring report QA performance study.

9. Discharge monitoring data shall be submitted in a format acceptable to the Regional Water Board and EPA. Specific reporting format may include preprinted forms and/or electronic media. The results of all monitoring required by this Order shall be reported to the Regional Water Board, and shall be submitted in such a format as to allow direct comparison with the limitations and requirements of this Order. The hard copy of submitted reports shall serve as the official submittal.

10. The Discharger shall tabulate the monitoring data to clearly illustrate compliance and/or noncompliance with the requirements of the Order.

11. For every item of monitoring data where the requirements are not met, the monitoring report shall include a statement discussing the reasons for noncompliance, the actions undertaken or proposed that will bring the discharge into full compliance with requirements at the earliest time, and an estimate of the date when the Discharger will be in compliance. The Discharger shall notify the Regional Water Board by letter when compliance with the time schedule has been achieved.

12. The Discharger shall assure that records of all monitoring information are maintained and accessible for a period of at least five years from the date of the sample, report, or application. This period of retention shall be extended during the course of any unresolved litigation regarding this discharge or by the request of the Regional Water Board at any time. Records of monitoring information shall include:

    a. The information listed in Attachment D- IV Standard Provisions – Records, subparagraph B. of this Order;
    b. The laboratory which performed the analyses;
    c. The modification(s) to analytical techniques or methods used;
    d. All sampling and analytical results, including
        1) Units of measurement used;
        2) Minimum reporting limit for the analysis (minimum level, practical quantitation level (PQL));
        3) Results less than the reporting limit but above the method detection limit (MDL);
        4) Data qualifiers and a description of the qualifiers;
        5) Quality control test results (and a written copy of the laboratory quality assurance plan);
        6) Dilution factors, if used; and
        7) Sample matrix type

    e. All monitoring equipment calibration and maintenance records;

f. All original strip charts from continuous monitoring devices;
g. All data used to complete the application for this Order; and,
h. Copies of all reports required by this Order.
i. Electronic data and information generated by the Supervisory Control and Data Acquisition (SCADA) System.

13. The flow measurement system shall be calibrated at least once per year or more frequently, to ensure continued accuracy.

14. All monitoring instruments and devices used by the Discharger to fulfill the prescribed monitoring program shall be properly maintained and calibrated as necessary to ensure their continued accuracy. In the event that continuous monitoring equipment is out of service for greater than a 24-hour period, the Discharger shall obtain a representative grab sample each day the equipment is out of service. The Discharger shall correct the cause(s) of failure of the continuous monitoring equipment as soon as practicable. In its monitoring report, the Discharger shall specify the period(s) during which the equipment was out of service and if the problem has not been corrected, shall identify the steps which the Discharger is taking or proposes to take to bring the equipment back into service and the schedule for these actions.

15. Monitoring and reporting shall be in accordance with the following:

a. "Grab" sample is defined as any individual sample collected in less than 15 minutes
b. Samples and measurements taken for the purpose of monitoring shall be representative of the monitored activity.
c. The results of any analysis of samples taken more frequently than required at the locations specified in this M&RP shall be reported to the Regional Water Board.
d. Weekly samples shall be collected on any representative day of each week.
e. Monthly samples shall be collected on any representative day of each month.
f. Quarterly samples shall be collected in January, April, July, and October.
g. Semi-Annual samples shall be collected at the initiation of the project for the first sample and during January and July thereafter.
h. Annual samples shall be collected in March.
k. The Discharger shall deliver a copy of each monitoring report in the appropriate format to:

California Regional Water Quality Control Board
Santa Ana Region
3737 Main Street, Suite 500
Riverside, CA 92501-3348

16. For testing and analyses of selenium (total and recoverable Se and Se speciation), the Discharger shall use HPLC ICP-MS method with interference reducing capabilities or the Zhang hydride generation method.

B. Minimum Level (ML) Requirements

For priority pollutants the methods must meet the lowest minimum levels (MLs) specified in Attachment H of this Order, where no methods are specified for a given pollutant, by methods approved by this Regional Water Board or the State Water Board. When there is more than one ML value for a given substance listed in Attachment H – ML Table[1], the Discharger shall select any one of those cited analytical methods for compliance determination when the associated ML is below the calculated effluent limitation.

If no ML value is below the effluent limitation, then the Discharger shall select as the reporting level (RL), the lowest ML value and its associated analytical method listed in Attachment H.

II. MONITORING LOCATIONS

The Discharger shall establish the following monitoring locations to demonstrate compliance with the effluent limitations, discharge specifications, and other requirements in this Order:

Discharge Point Name	Monitoring Location Name	Monitoring Location Description	Discharge Point Latitude	Discharge Point Longitude
--	M-INF-001	Influent port to UST 222 PCAP treatment system		
001	M-001	Effluent port from UST 222 PCAP treatment system to storm drain	33° 42' 51.5" N	117° 49' 34.6" W
002	L-002	Effluent port from UST 222 PCAP treatment system to discharge to land infiltration system		
--	M-INF-003	Influent port to IRP 13S TCRA treatment system		
003	M-003	Effluent port from the IRP 13S TCRA treatment system to storm drain	33° 42' 45.6" N	117° 49' 40.4" W

III. INFLUENT MONITORING REQUIREMENTS

A. Monitoring Location M-INF-001 and M-INF-003

1. The Discharger shall monitor the influent to treatment system for sites UST 222 PCAP and IRP-13S TCRA treatment systems as follows:

Parameter	Units	Sample Type	Minimum Sampling Frequency	Required Analytical Test Method
Benzene	µg/L	Grab	Monthly	EPA Method 8260
Ethylbenzene	µg/L	"	"	"
Methyl Tertiary Butyl Ether (MTBE)	µg/L	"	"	"
Tert Butyl Alcohol (TBA)	µg/L	"	"	"

[1] The ML table includes all ML values and their associated analytical methods.

Parameter	Units	Sample Type	Minimum Sampling Frequency	Required Analytical Test Method
Tetrachloroethene (PCE)	µg/L	Grab	Monthly	EPA Method 8260
Toluene	µg/L	"	"	
Trichloroethylene (TCE)	µg/L	"	"	"
1,2,3-Trichloropropane	µg/L	"	"	"
Xylenes	µg/L	"	"	"
Total petroleum hydrocarbons	µg/L			EPA METHOD 8015 Modified
Total Recoverable Selenium	µg/L	"	"	See I.A.15., above.
Total Recoverable Lead	µg/L	"		ICP/AES-200.7
Total Nitrogen	mg/L	"	"	See Section I.A.2. & I.A.3., above this MRP
Total Dissolved Solids (TDS)	mg/L	"	"	See Section I.A.2. & I.A.3., above this MRP

IV. EFFLUENT MONITORING REQUIREMENTS

A. Monitoring Location M-001 and M-003 for Surface Discharge

1. The Discharger shall monitor effluent from UST 222 (PCAP) and IRP-13S (TCRA) treatment systems, as follows when discharging to the storm drain/surface water:

Parameter	Units	Sample Type	Minimum Sampling Frequency (See IV.B.1., below)	Required Analytical Test Method
Flow	GPD	Metered	Weekly	--
Total Petroleum Hydrocarbons[2]	µg/L	Grab	Monthly	EPA METHOD 8015 Modified
Benzene	"	"	"	EPA Method 8260
Toluene	"	"	"	"
Xylene	"	"	"	"
Ethylbenzene	"	"	"	"
Methyl Tertiary Butyl Ether (MTBE)	"	"	"	"
Trichloroethylene (TCE)	"	"	"	"
1,1-Dichloroethane (1,1-DCA)	"	"	"	"
1,1-Dichloroethylene (1,1-DCE)	"	"	"	"
cis-1,2-Dichloroethylene (cis-1,2-DCE	"	"	"	"
trans-1,2-Dichloroethylene (trans-1,2-DCE)	"	"	"	"
1,2,3-trichloropropane (1,2,3-TCP)	"	"	"	"
Tert Butyl Alcohol (TBA)	"	"	"	"
Total Arsenic[3]	"	"	"	See Section I.A.2. & I.A.3., above this MRP

2 Total Petroleum Hydrocarbons with gasoline distinction. TPH-G (Modified 8015).

Parameter	Units	Sample Type	Minimum Sampling Frequency (See IV.B.1., below)	Required Analytical Test Method
Total Recoverable Cadmium[3]	µg/L	Grab	Monthly	See Section I.A.2. & I.A.3., above this MRP
Total Recoverable & Dissolved Copper[3]	"	"	"	"
Total Recoverable & Dissolved Nickel[3]	"	"	"	"
Total Recoverable & Dissolved Zinc[3]	"	"	"	"
Total Recoverable Lead	"	"	"	"
Total Recoverable Selenium	"	"	"	See I.A.15., above.
Total Residual Chlorine[4]	mg/L	"	"	See Section I.A.2. & I.A.3., above this MRP
Total Dissolved Solids	"	"	"	"
Total Nitrogen (TKN, NH_3, NO_2, NO_3)	"	"	"	"
Hardness	"	"	"	"
pH	Std unit	"	"	"
Priority Pollutant (see Attachment "I")	µg/L	"	Annual	"
Toxicity Testing (see paragraph V.A.1., below)	Pass/Fail	"	At the initiation of the project and annually thereafter (see paragraph I.A.14.h., above)	"

B. Minimum Frequency of Sampling & Analysis:

1. Weekly sampling and analyses shall be conducted for the first month after correcting a violation of effluent limitations.

C. Total Nitrogen and Total Recoverable Selenium Offset Monitoring and Reporting

1. If and when the Discharger implements a nitrogen and/or selenium offset approved by the Executive Officer, the Discharger shall assure sufficient monitoring of influent and effluent flow, total nitrogen including particulate organic nitrogen, and/or total selenium concentrations, as appropriate, from the facility(ies) providing the offset is conducted to demonstrate that the requisite offset(s) of the Discharger's nitrogen and/or selenium load is achieved.

2. Provide documentation necessary to demonstrate that implementation of the offset(s) results in requisite reduction of total nitrogen and selenium as applicable.

3. If no requisite offset occurs during the monitoring period, a letter to that effect shall be submitted in lieu of a monitoring report. The letter shall include a justification for the failure to provide the offset.

---

3 This constituent shall be monitored for four sampling events. If all four sample test results pursuant to Section C., whichever is applicable, result in non-detection, no further monitoring for this constituent is required.

4 When chlorine is used in treatment process, total residual chlorine must be measured.

V. WHOLE EFFLUENT TOXICITY TESTING REQUIREMENTS

A. Toxicity Monitoring Requirements at M-001A and M-003A

1. The Discharger shall conduct acute toxicity testing as specified in Methods for Measuring the Acute Toxicity of Effluents to Freshwater and Marine Organisms (EPA-821-R-02-012, Fifth Edition, October 2002). Using a control and 100% effluent, static renewal survival (pass/fail) tests for 96 hours shall be conducted using the two test species specified in the table below corresponding to the onsite groundwater salinity, for the first required annual test under this Order. Based on the results, the Discharger shall determine the most sensitive test species. For the required succeeding toxicity monitoring, the Discharger shall use the most sensitive species with prior approval from the Regional Water Board Executive Officer. The Discharger shall submit documentation supporting the Discharger's determination of the most sensitive test species. The effluent tests must be conducted concurrent with reference toxicant tests. The effluent and reference toxicant tests must meet all test acceptability criteria as specified in the acute manual[5]. If the test acceptability criteria are not achieved, then the Discharger must re-sample and re-test within 14 days. The test results must be reported according to the acute manual chapter on Report Preparation, and shall be attached to the monitoring reports. The use of alternative methods for measuring acute toxicity may be considered by the Executive Officer on a case-by-case basis.

IF THE EFFLUENT OR RECEIVING WATER SALINITY IS:	TEST SPECIES	TEST
Less than 1,000 mg/l salinity	Fathead minnow, *Pimphales promelas*	Larval survival test
	Water flea, *Ceriodaphnia dubia*	Survival test
Equal to or greater than 1,000 mg/l salinity	Silverside, *Menedia beryllina*	Survival Test
	Pacific mysid, *Holmesimysis costata*	Survival Test

2. In the event that the required annual toxicity test fails, the Discharger shall stop any discharge of wastewater to waters of the U.S. and shall retest within 14 days of receiving the notice of failure and shall determine the cause of the failure. The Discharger shall stop any discharge of wastewater to surface waters until such time that the cause of toxicity is determined and appropriately addressed. Commencement of any discharge shall be with prior approval by the Executive Officer.

5 "Acute manual" refers to protocols described in "Methods for Measuring the Acute Toxicity of Effluents to Freshwater and Marine Organisms" (EPA-821-R-02-012, Fifth Edition, October 2002).

3. Quality Assurance/Control:

A quality assurance/quality control (QA/QC) program shall be instituted to verify the results of the effluent toxicity monitoring program. The QA/QC program shall include but shall not be limited to the following: (1) Selection of an independent testing laboratory; (2) Approval by the Regional Water Board's Executive Officer or Executive Officer's designee of the independent testing laboratory; (3) Once during the year, the Discharger shall split samples with the independent laboratory for conducting chronic toxicity testing; (4) Results from the independent laboratory shall be submitted to the Regional Water Board and the Discharger for evaluation; (5) The Discharger shall review the test acceptability criteria in accordance with the EPA test protocols, EPA-821-R-02-013.

VI. LAND DISCHARGE MONITORING REQUIREMENTS

A. Monitoring Location L-002 for Infiltration/Injection and Irrigation

1. The Discharger shall monitor effluent from site UST 222 PCAP treatment system at L-002 as follows:

Parameter	Units	Sample Type	Minimum Sampling Frequency	Required Analytical Test Method
Flow	------	GPD	Weekly	--
Total Petroleum Hydrocarbons[6]	Grab	µg/L	Monthly	EPA METHOD 8015 Modified
Benzene	"	"	"	EPA Method 8260
Toluene	"	"	"	"
Xylene	"	"	"	"
Ethylbenzene	"	"	"	"
Methyl Tertiary Butyl Ether (MTBE)	"	"	"	"
Trichloroethylene (TCE)	"	"	"	"
1,1-Dichloroethane (1,1-DCA)	"	"	"	"
1,1-Dichloroethylene (1,1-DCE)	"	"	"	"
cis-1,2-Dichloroethylene (cis-1,2-DCE	"	"	"	"
trans-1,2-Dichloroethylene (trans-1,2-DCE)	"	"	"	"
1,2,3-trichloropropane (1,2,3-TCP)	"	"	"	"
Tert Butyl Alcohol (TBA)	"	"	"	"
pH	Std unit	"	"	See Section I.A.2. & I.A.3., above this MRP "

6 Total Petroleum Hydrocarbons with gasoline distinction. TPH-G (Modified 8015).

VII. RECEIVING WATER MONITORING REQUIREMENTS – NOT APPLICABLE

VIII. OTHER MONITORING REQUIREMENTS – NOT APPLICABLE

IX. REPORTING REQUIREMENTS

A. General Monitoring and Reporting Requirements

1. The Discharger shall comply with all Standard Provisions (Attachment D) related to monitoring, reporting, and record keeping.

B. Self Monitoring Reports (SMRs)

1. At any time during the term of this permit, the State or Regional Water Board may notify the Discharger to electronically submit Self-Monitoring Reports (SMRs) using the State Water Board's California Integrated Water Quality System (CIWQS) Program Web site (http://www.waterboards.ca.gov/ciwqs/index.html). Until such notification is given, the Discharger shall submit hard copy SMRs in accordance with the requirements described in subsection B.5 below. The CIWQS Web site will provide additional directions for SMR submittal in the event there will be service interruption for electronic submittal.

2. The Discharger shall report in the SMR the results for all monitoring specified in this MRP under sections III through IX. Additionally, the Discharger shall report in the SMR the results of any special studies, acute and chronic toxicity testing, TRE/TIE, PMP, and Pollution Prevention Plan required by Special Provisions – VI.C. of this Order. The Discharger shall submit quarterly and annual SMRs including the results of all required monitoring using USEPA-approved test methods or other test methods specified in this Order. If the Discharger monitors any pollutant more frequently than required by this Order, the results of this monitoring shall be included in the calculations and reporting of the data submitted in the SMR.

3. Monitoring periods and reporting for all required monitoring shall be completed according to the following schedule:

Sampling Frequency	Monitoring Period Begins On…	Monitoring Period	SMR Due Date
Continuous	Day after permit effective date	All	Submit with quarterly SMR
Daily	April 22, 2006	(Midnight through 11:59 PM) or any 24-hour period that reasonably represents a calendar day for purposes of sampling.	Submit with quarterly SMR
Weekly	April 23, 2006	Sunday through Saturday	Submit with quarterly SMR
Monthly	May 1, 2006	1st day of calendar month through last day of calendar month	31 days from the end of the monitoring period or, Submit with quarterly SMR
Quarterly	May 1, 2006	January 1 through March 31 April 1 through June 30 July 1 through September 30 October 1 through December 31	31 days from the end of the monitoring period

Sampling Frequency	Monitoring Period Begins On...	Monitoring Period	SMR Due Date
Semiannually	July 1, 2006	January 1 through June 30 July 1 through December 31	31 days from the end of the monitoring period
Annually	January 1 following (or on) permit effective date	January 1 through December 31	60 days from the end of the monitoring period

4. Reporting Protocols. The Discharger shall report with each sample result the applicable Reporting Level (RL) and the current Method Detection Limit (MDL), as determined by the procedure in 40 CFR Part 136. The Discharger shall report the results of analytical determinations for the presence of chemical constituents in a sample using the following reporting protocols:

   a. Sample results greater than or equal to the RL shall be reported as measured by the laboratory (i.e., the measured chemical concentration in the sample).

   b. Sample results less than the RL, but greater than or equal to the laboratory's MDL, shall be reported as "Detected, but Not Quantified," or DNQ. The *estimated chemical concentration of the sample shall also be reported.

      For the purposes of data collection, the laboratory shall write the estimated chemical concentration next to DNQ as well as the words "Estimated Concentration" (may be shortened to "Est. Conc."). The laboratory may, if such information is available, include numerical estimates of the data quality for the reported result. Numerical estimates of data quality may be percent accuracy (± a percentage of the reported value), numerical ranges (low to high), or any other means considered appropriate by the laboratory.

   c. Sample results less than the laboratory's MDL shall be reported as "Not Detected," or ND.

   d. Dischargers are to instruct laboratories to establish calibration standards so that the ML value (or its equivalent if there is differential treatment of samples relative to calibration standards) is the lowest calibration standard. At no time is the Discharger to use analytical data derived from extrapolation beyond the lowest point of the calibration curve.

5. The Discharger shall submit hard copy SMRs (with an original signature) when required by subsection B.1 above in accordance with the following requirements:

   a. The Discharger shall arrange all reported data in a tabular format. The data shall be summarized to clearly illustrate whether the facility is operating in compliance with interim and/or final effluent limitations.

   b. The Discharger shall attach a cover letter to the SMR. The information contained in the cover letter shall clearly identify violations of the WDRs; discuss corrective actions taken or planned; and the proposed time schedule for corrective actions. Identified violations must include a description of the requirement that was violated and a description of the violation.

c. SMRs must be submitted to the Regional Water Board, signed and certified as required by the Standard Provisions (Attachment D), to the address listed below:

6. The Discharger shall attach a cover letter to the SMR. The information contained in the cover letter shall clearly identify violations of the WDRs; discuss corrective actions taken or planned; and the proposed time schedule for corrective actions. Identified violations must include a description of the requirement that was violated and a description of the violation.

7. By March 1 of each year, the Discharger shall submit an annual report to the Regional Water Board. The annual report shall include the following:

   a. Tabular and graphical summaries of the monitoring data obtained during the previous year;
   b. A discussion of the compliance record and the corrective actions taken or planned, which may be needed to bring the discharge into full compliance with the waste discharge requirements;
   c. A summary of the quality assurance (QA) activities for the previous year; and
   d. For priority pollutant constituents that do not have effluent limitations but are required to be monitored, the Discharger shall evaluate the monitoring data obtained during the previous year and determine whether detected constituents are at levels that would warrant reopening the permit to include effluent limitations for such constituent(s). To conduct this evaluation, the concentration of detected constituents shall be compared to the most stringent applicable receiving water objectives (freshwater or human health (consumption of organisms only) as specified for that pollutant[7] in 40 CFR 131.38[8]). The Discharger shall include a discussion of the corrective actions taken or planned to address values above receiving water objectives.

8. SMRs must be submitted to the Regional Water Board, signed and certified as required by the standard provisions (Attachment D), to the address listed below:

   California Regional Water Quality Control Board
   Santa Ana Region
   3737 Main Street, Suite 500
   Riverside, CA 92501-3348

C. Discharge Monitoring Reports (DMRs)

1. As described in Section IX.B.1 above, at any time during the term of this permit, the State or Regional Water Board may notify the Discharger to electronically submit SMRs that will satisfy federal requirements for submittal of Discharge Monitoring Reports (DMRs). Until such notification is given, the Discharger shall submit DMRs in accordance with the requirements described below.

---

7 For those priority pollutants without specified criteria values, accelerated monitoring is not required.

8 See Federal Register/ Vol. 65, No. 97 / Thursday, May 18, 2000 / Rules and Regulations

2. DMRs must be signed and certified as required by the standard provisions (Attachment D). The Discharge shall submit the original DMR and one copy of the DMR to the address listed below:

   State Water Resources Control Board
   Discharge Monitoring Report Processing Center
   Post Office Box 671
   Sacramento, CA 95812

3. All discharge-monitoring results must be reported on the official USEPA pre-printed DMR forms (EPA Form 3320-1). Forms that are self-generated or modified cannot be accepted.

D. Other Reports – Not Applicable

Attachment F – Fact Sheet – Table of Contents

Attachment F – Fact Sheet **F-3**
I. Permit Information **F-3**
II. Facility Description **F-5**
A. Description of Wastewater Treatment or Controls F-6
B. Discharge Points and Receiving Waters F-7
C. Summary of Existing Requirements and Self-Monitoring Report (SMR) Data F-7
D. Compliance Summary F-8
E. Planned Changes F-8
III. Applicable Plans, Policies, and Regulations **F-9**
A. Legal Authorities F-9
B. California Environmental Quality Act (CEQA) F-10
C. State and Federal Regulations, Policies, and Plans F-10
D. Impaired Water Bodies on CWA 303(d) List F-12
E. Other Plans, Polices and Regulations F-16
IV. Rationale For Effluent Limitations and Discharge Specifications **F-16**
A. Discharge Prohibitions F-16
B. Technology-Based Effluent Limitations F-17
1. Scope and Authority F-17
2. Technology-Based Effluent Limitations F-17
C. Water Quality-Based Effluent Limitations (WQBELs) F-18
1. Scope and Authority F-18
2. Applicable Beneficial Uses and Water Quality Criteria and Objectives F-18
3. Determining the Need for WQBELs F-19
4. WQBEL Calculations F-22
D. Interim Effluent Limitations F-24
F. Land Discharge Specifications F-24
G. Reclamation Specifications—Not Applicable F-24
V. Rationale for Receiving Water Limitations **F-25**
A. Surface Water F-25
B. Groundwater F-25
VI. rationale for Monitoring and Reporting Requirements **F-25**
A. Influent Monitoring F-25
B. Effluent Monitoring F-25
C. Whole Effluent Toxicity Testing Requirements F-26
D. Receiving Water Monitoring – Not Applicable F-26
E. Other Monitoring Requirements – Not Applicable F-26
VII. Rationale for Provisions **F-26**
A. Standard Provisions F-26
1. Standard Provisions F-26
2. Regional Water Board Standard Provisions F-27
B. Special Provisions F-27
1. Reopener Provisions F-27
2. Special Studies and Additional Monitoring Requirements F-27
3. Best Management Practices and Pollution Prevention F-27
4. Compliance Schedules F-27
5. Construction, Operation, and Maintenance Specifications F-28

6. Other Special Provisions F-28
VIII. Public Participation F-28
A. Notification of Interested Parties F-28
B. Written Comments F-28
C. Public Hearing F-29
D. Waste Discharge Requirements Petitions F-29
E. Information and Copying F-29
F. Register of Interested Persons F-29
G. Additional Information F-30

ATTACHMENT F – FACT SHEET

As described in Section II of this Order, this Fact Sheet includes the legal requirements and technical rationale that serve as the basis for the requirements of this Order.

This Order has been prepared under a standardized format to accommodate a broad range of discharge requirements for Dischargers in California. Only those sections or subsections of this Order that are specifically identified as "not applicable" have been determined not to apply to this Discharger. Sections or subsections of this Order not specifically identified as "not applicable" are fully applicable to this Discharger.

I. PERMIT INFORMATION

The following table summarizes administrative information related to the facility.

WDID	**8 302492001**
Discharger	**United States Department of the Navy**
Name of Facility	**Former Marine Corps Air Station Tustin**
Facility Address	**Facility is bounded by Red Hill Boulevard, Barranca Parkway, Jamboree Road and Edinger Avenue**
	Tustin, CA 92710
	Orange County
Facility Contact, Title and Phone	**Darren Newton, BRAC Environmental Coordinator, with Department of the Navy (619)-532-0963**
Authorized Person to Sign and Submit Reports	**Site UST 222, PCAP Treatment System - Nick Amini, Project Manager, Battelle, (714) 231-4731; Site OU-1A, TCRA Treatment System – Rush Boynton, Project Manager, Cape Environmental (949) 474-3090**
Mailing Address	**Department of the Navy, BRAC Program Management Office West 1455 Frazee Road, Suite 900, San Diego CA 92108-4301**
Billing Address	**BRAC Program Management Office West 1455 Frazee Road, Suite 900, San Diego CA 92108-4301**
Type of Facility	**Groundwater cleanup**
Major or Minor Facility	**Minor**
Threat to Water Quality	**1**
Complexity	**C**
Pretreatment Program	**N**
Reclamation Requirements	**N**
Facility Permitted Flow	**200,000 gallons per day**
Facility Design Flow	**UST 222, PCAP System: 96,122 gpd (gallons per day); IRP-13S, TCRA System: 36,720 gpd**
Watershed	**San Diego Creek/Newport Bay, Irvine Management Zone**
Receiving Water	**Peters Canyon Wash and Irvine Groundwater Management Zone**
Receiving Water Type	**Surface water and groundwater**

A. United States Department of the Navy (hereinafter Discharger) is the owner and operator of the former Marine Corps Air Station Tustin (hereinafter Facility) on which the groundwater cleanup sites are located.

B. The Discharger owns and operates several treatment facilities to remediate groundwater contaminated by petroleum hydrocarbons and/or solvents. The Discharger discharges treated groundwater to the storm drain that drains into Peters Canyon Wash, a tributary of San Diego Creek and Newport Bay, all waters of the United States. The discharges are currently regulated by General Waste Discharge Requirements for Discharges to Surface Waters of Extracted and Treated Groundwater resulting from the cleanup of groundwater polluted by petroleum hydrocarbons and/or solvents at spills, leaks, landfills, fueling stations and similar sites, Order No. 96-18-067, NPDES No. CAG918001.

In July 2001, the Discharger requested authorization to increase the flow rate of the discharge from 150,000 gallons per day to 200,000 gallon per day to accommodate a new groundwater treatment system. In addition, the Discharger informed the Regional Water Board that the discharge had the potential to contain methyl tert-butyl ether (MTBE), acetone and 1,2,3–trichloropropane (1,2,3-TCP). The general groundwater cleanup Order No. 96-18 did not include discharge limitations for these constituents. On August 9, 2001, the Discharger was authorized to discharge up to 200,000 gallons per day and was informed that in order to establish discharge limitations for these constituents, individual waste discharge requirements would need to be drafted. The Discharger was provided with the anticipated discharge limits for MTBE, acetone and 1,2,3-TCP shown in the table below. The Discharger instituted treatment technology to meet these anticipated limits.

Constituent	Anticipated Discharge Limit
Methyl tert-butyl ether	13 microgram/liter (µg/l)
1,2,3-trichloropropane	0.5 µg/l (detection limit)
Acetone	Taste, odor threshold (20,000 µg/l) and at a concentration such that the discharge passes the toxicity testing.

Order No. 96-18 expired on October 1, 2001. However, the Discharger is complying with the terms of the Order pending the issuance of individual waste discharge requirements.

Order No. 96-18 was replaced by Order No.R8-2002-0007, NPDES No. CAG918001, adopted by the Regional Water Board on January 23, 2002. This Order prescribes general waste discharge requirements for discharges to surface waters of extracted and treated groundwater resulting from the cleanup of groundwater polluted by petroleum hydrocarbons and/or solvents at spills, leaks, landfills, fueling stations and similar sites, within the Santa Ana Region, including the San Diego Creek/Newport Bay watershed. This Order does not include limitations for acetone or 1,2,3- trichloropropane. Accordingly, it remains appropriate to issue individual waste discharge requirements to the Discharger. Furthermore, the Regional Water Board has found that selenium and nitrogen in groundwater-related discharges in the San Diego Creek/Newport Bay watershed warrant special regulatory attention not provided by Order No. R8-2002-0007[1].

[1] See Regional Water Board Order No. R8-2004-0021, NPDES No. CAG998002 and Order No. R8-2005-0079, NPDES No. CA8000406

II. FACILITY DESCRIPTION

The former Marine Corps Air Station Tustin (MCAS Tustin) was initially established during World War II as a Navy lighter-than-air facility to support air patrols off the southern California Coast. The station was commissioned in the fall of 1942. Between 1951 and 1999, it was used for helicopter operation. MCAS Tustin was closed on July 2, 1999.

In 1983, the Navy started investigations at MCAS Tustin under the Department of Defense Installation Restoration Program (IRP). The IRP is an investigation and cleanup of contaminant releases resulting from military practices that occurred prior to 1988. Investigations and cleanup under the IRP are conducted in accordance with the National Oil and Hazardous Substances Pollution Contingency Plan (NCP), Comprehensive Environmental Response, Compensation, and Liability Act of 1980 (CERCLA), and Executive Orders 12088 and 12580. The Navy had identified 16 installation restoration program sites and 287 areas of concern (AOCs) at MCAS Tustin. Eight sites were subsequently identified as source areas for groundwater contamination.

In May 2002, most of the property was transferred to the City of Tustin. The Navy retained the areas with significant soil and/or groundwater contamination. The facility location is shown in Attachment "B".

The Navy now owns only the portions of MCAS Tustin directly overlying the groundwater plumes and a buffer zone around the plumes. Cleanup of polluted groundwater and soils resulting from past operations at the facility is ongoing under the IR Program.

The depth to groundwater at the facility ranges from approximately 10 to 25 feet. The upper aquifer is divided into three laterally discontinuous interfingering water-bearing zones. The soils are primarily interbedded silts, silty clays and stringers of sand and silty sand. The soils on the western side of the Station near underground storage tank (UST) Site 222 and Site IRP 13S contain coarser materials, sands and gravelly sands, and show connections between all three zones. The contaminant plumes from sites UST 222 and IRP13S overlap. Methyl tertiary butyl ether (MTBE) and 1,2,3 trichloropropane (1,2,3-TCP) were detected in the third water-bearing zone at 99 feet below the surface before startup of the existing pump and treat systems.

There are generally two types of source area contamination: solvent releases and petroleum fuel. The principal groundwater contaminants of concern are gasoline fuels (benzene, toluene, ethylbenzene, xylenes (BTEX), methyl tertiary butyl ether (MTBE), and solvents (trichloroethene (TCE), 1,2,3-trichloropropane (1,2,3-TCP), 1,2-dichloroethane (1,2-DCA), cis and trans 1,2-dichloroethene (1,2-DCE), and tert-amyl methyl ether (TAME), tert-butyl alcohol (TBA)).

In addition, high levels of selenium, nitrogen and total dissolved solids (TDS) are found in the groundwater at the facility and are not considered to be the result of Navy activities.

A. Description of Wastewater Treatment or Controls

1. UST 222 PCAP system -The system is located in the northwest portion of the facility. In 2001, a groundwater extraction and treatment system was installed to remove the gasoline and methyl tertiary butyl ether (MTBE) that leaked into the groundwater. The treatment system consists of two parts: the Advanced Oxidation (HiPOx^{TM}) unit and the BioGAC unit. The Advanced Oxidation generates hydroxyl radicals (OH^-) that oxidize the organic contaminants (specifically MTBE) in the groundwater. The OH^- is generated from combining ozone and hydrogen peroxide. The BioGAC is granular activated carbon that has been inoculated with bacteria. The BioGAC unit is used to remove acetone, an end product of the oxidation of MTBE.

   In January 2004, to evaluate selenium in the discharges, influent and effluent groundwater samples were collected from the UST 222 PCAP treatment system and analyzed for selenium species, total selenium, and pH. A review of the selenium speciation analytical data suggests that the total selenium concentration in the influent sample is 127 μg/L, and the most dominant species is selenate ($SeO4^{-2}$).

   Also in January 2004, the Discharger conducted a pilot study by discharging a portion of the treated groundwater from the treatment system into the nearby open excavation to infiltrate the discharge and reduce the amount of water discharged to surface water. Approximately 150,000 gallons were infiltrated into the open excavation. Additional infiltration tests have been conducted to determine the feasibility of infiltration within the source area. The results from the infiltration test indicate that 30 gallons per minute could be infiltrated into the groundwater beneath the UST-222 site. This approach would reduce the loading of selenium, nitrogen, and TDS to surface waters from this treatment system by approximately a third to a half.

   In July 2005, the Discharger submitted a plan to the Regional Water Board staff to divert approximately 28,800 gallons per day of effluent from the groundwater treatment system for infiltration at the area that was previously excavated to remove gasoline-contaminated soil, and flush remaining concentrations of gasoline in the soil into the groundwater to be captured by the extraction wells. The treated water will be applied using sprinklers or perforated pipe over approximately 2 acres in the source area. Approximately 8.78 pounds/year of selenium will not be discharged to Peters Canyon Wash.

2. IRP 13S TCRA system - This site is located east of the UST 222 site. In 2002, an interim groundwater extraction and treatment system began operation to reduce the threat of uncontrolled horizontal and vertical movement of 1,2,3-trichloropropane (1,2,3-TCP) in the groundwater. The extracted groundwater is filtered through two 2,000 lb granular activated carbon filled vessels. Design flow rate is 25.5 gpm. Average flow rates in 2002 (12.3gpm), 2003 (8.1 gpm), and 2004 (18.3 gpm).

B. Discharge Points and Receiving Waters

Discharges from the UST 222 PCAP treatment system at Discharge Point 001 and from the IRP 13S TCRA treatment system at Discharge Point 003 flow into onsite, buried storm drains and into San Joaquin Ditch, the open unlined storm water channel along the eastern boundary of the former Station. The water flows off the former Station at the intersection of Jamboree and Barranca Parkway and flows below grade along Barranca Parkway and empties into Peters Canyon Wash at Barranca Parkway. Peters Canyon Wash is a tributary to Reach 1 of San Diego Creek which flows into Newport Bay. The Discharger plans to infiltrate/re-inject a portion of the treated wastewater into the underlying Irvine Groundwater Management Zone to reduce total loads of selenium and nitrogen discharged to surface waters.

C. Summary of Existing Requirements and Self-Monitoring Report (SMR) Data

Effluent limitations contained in Order No. 96-18 and representative monitoring data are as follows:

Parameter	Effluent Limitation			Monitoring Data	
	Average Monthly	Average Weekly	Maximum Daily	Highest Daily Discharge (UST 222 PCAP From 08/31/01 – 04/30/05)	Highest Daily Discharge (IRP 13S TCRA From 12/14/01 - 04/30/05)
Total Petroleum Hydrocarbons			100.0 µg/L	61 µg/L	70 µg/L
Benzene			1.0 µg/L	<1	<1
Toluene			10.0 µg/L	<5	<0.5
Xylene			10.0 µg/L	<5	<1.5
Ethylbenzene			10.0 µg/L	<5	<0.5
Carbon Tetrachloride			0.5 µg/L	<5	<0.5
Chloroform			5.0 µg/L	<5	<0.5
Dichlorobromomethane			5.0 µg/L	<5	<0.5
Methyl Tert-Butyl Ether (MTBE)			*	8.2 µg/L	10 µg/L
Methyl Ethyl Ketone (MEK)			120 µg/L	<50	<2
Naphthalene			10.0 µg/L	<5	<1
Tetrachloroethene (PCE)			5.0 µg/L	<5	<0.5
Trichloroethylene			5.0 µg/L	<1.5	<5
1,1-Dichloroethane			5.0 µg/L	<5	<0.5
1,1-Dichloroethylene			6.0 µg/L	<1	<0.5
1,2-Dichloroethylene			10.0 µg/L	<1	<0.5
1,1,1-Trichloroethane (TCA)			5.0 µg/L	<1	<0.5
1,4- Dioxane			3.0 µg/L	<1.9	<1.5
Perchlorate			4.0 µg/L	<4	<4
Lead			30.45 µg/L	<3	12.7
Total Dissolved Solids (TDS)			--	3920 mg/L	3720 mg/L
Total Inorganic Nitrogen (TIN)			--	14.7 mg/L	14 mg/L
Suspended Solids			75 mg/L	<10	17
Sulfides			0.4 mg/L	<1	<0.2

Parameter	Effluent Limitation			Monitoring Data	
	Average Monthly	Average Weekly	Maximum Daily	Highest Daily Discharge (UST 222 PCAP From 08/31/01 – 04/30/05)	Highest Daily Discharge (IRP 13S TCRA From 12/14/01 - 04/30/05)

* MTBE not regulated in No. 96-18. Limit specified in Order No. R8-2002-0007, NPDES CAG918001 and applied to MCAS Tustin discharges (See I.B.- Permit Information)

Parameter	Monitoring Data *	
	UST 222 PCAP From 08/31/01 – 04/30/05 Highest Daily Discharge	**IRP 13S TCRA From 12/14/2001 - 04/30/05 Highest Daily Discharge**
1,2,3-Trichloropropane, µg/L	1.4	1.2
Selenium, µg/L	127	177
Acetone, µg/L	250	<20

* No effluent limitations for these constituents in Order No. 96-18. See I.B- Permit Information

D. Compliance Summary

The Discharger met all effluent limits specified in Order No. 96-18 for volatile organics. Discharges contained elevated concentrations of Selenium, TIN, TDS, and 1,2,3-TCP.

E. Planned Changes

The Discharger has taken steps to evaluate the selenium concentration in the treated groundwater and to identify potential volume-reduction BMPs to reduce discharges of nitrogen and TDS, as well as selenium. The Discharger has also proposed to review treatment technologies that might be employed to reduce selenium, nitrogen and TDS concentrations in the treated groundwater discharges.

In January 2004, influent and effluent groundwater samples were collected from the UST 222 PCAP treatment systems and analyzed for total selenium and selenium species. The total selenium concentration was 127 µg/L, and the most dominant species was selenate ($SeO4^{-2}$). Also in January 2004, the Discharger conducted a pilot study by discharging a portion of the treated groundwater from the UST 222 PCAP treatment system into the nearby open excavation to infiltrate the discharge and reduce the amount of water discharged to surface water. Approximately 150,000 gallons were infiltrated into the open excavation. Additional infiltration tests have been conducted to determine the feasibility of infiltration within the source area. The results from the infiltration test indicate that 30 gallons per minute could be infiltrated into the groundwater beneath the UST 222 site. This approach would reduce the loading of selenium, nitrogen, and TDS to surface waters from this treatment system by approximately a third to a half.

On September 24, 2004 the Navy submitted a plan for reviewing technology options for reducing the concentrations of selenium, total dissolved solids and nitrate in the effluent.

The plan includes selenium speciation of the IRP 13S TCRA system influent and effluent and bench-scale and or field pilot investigations using influent and effluent water systems from the TCRA system to select the treatment technology (such as anion exchange resin or another technology) to reduce selenium, nitrate, and TDS concentrations in the treated groundwater discharges. This would be followed by full-scale implementation of the selected technology at the IRP 13S TCRA system. The same technology might be applied at the UST 222 PCAP (and other) treatment sites at the Facility. The plan does not include specific schedules for the tasks to be completed.

In July 2005, the Discharger submitted a plan to the Regional Water Board staff to divert approximately 28,800 gallons per day of effluent from the UST 222 PCAP groundwater treatment system for infiltration at the area that was previously excavated to remove gasoline-contaminated soil. The intent, in part, is to flush remaining concentrations of gasoline in the soil into the groundwater to be captured by the extraction wells. The treated water will be applied using sprinklers or perforated pipe over approximately 2 acres in the source area. This infiltration project would result in reductions of nitrogen, TDS and selenium discharges to surface waters. For example, approximately 8.78 pounds/year of selenium would not be discharged to Peters Canyon Wash. This infiltration project has not yet commenced.

This Order requires the Discharger to provide a specific plan and schedule for the investigation and implementation of volume-reduction and other selenium, nitrogen and TDS BMPs, and to implement that plan upon approval by the Executive Officer. This Order also recognizes that the Nitrogen Selenium Management Program Working Group is investigating selenium treatment and control technologies. The Order requires that if a practicable selenium treatment technology becomes available, the Discharger shall implement that technology and comply with the final selenium limits in this Order within one year of notification of the need to do so by the Regional Board, but in no case later than December 21, 2009.

The Discharger plans to discontinue the use of the HiPOx unit at the UST 222 PCAP treatment system and replace it with a Granular Activated Carbon treatment system starting the in May 2006.

III. APPLICABLE PLANS, POLICIES, AND REGULATIONS

The requirements contained in the proposed Order are based on the requirements and authorities described in this section.

A. Legal Authorities

This Order is issued pursuant to section 402 of the Federal Clean Water Act (CWA) and implementing regulations adopted by the U.S. Environmental Protection Agency (USEPA) and Chapter 5.5, Division 7 of the California Water Code (CWC). It shall serve as a NPDES permit for point source discharges from this facility to surface waters. This Order also serves as Waste Discharge Requirements (WDRs) pursuant to Article 4, Chapter 4 of the CWC for discharges that are not subject to regulation under CWA section 402.

B. California Environmental Quality Act (CEQA)

This action to adopt an NPDES permit is exempt from the provisions of the California Environmental Quality Act (Public Resources Code Section 21100, et seq.) in accordance with Section 13389 of the CWC.

C. State and Federal Regulations, Policies, and Plans

1. **Water Quality Control Plans.** This Order includes requirements that implement the Water Quality Control Plan (Basin Plan), which was adopted by the Regional Water Board on March 11, 1994. The Basin Plan became effective on January 24, 1995. This Plan designates beneficial uses, establishes water quality objectives, and contains implementation programs and policies to achieve those objectives for all waters addressed through the plan. In addition, State Water Resources Control Board (State Water Board) Resolution No. 88-63 (Sources of Drinking Water Policy) requires that, with certain exceptions, the Regional Water Board assign the municipal and domestic supply use to water bodies. Based on criteria specified in Resolution No. 88-63, the Regional Water Board excepted Peters Canyon Wash, San Diego Creek and Newport Bay from the municipal and domestic supply beneficial uses. Beneficial uses applicable to San Diego Creek/Newport Bay are as follows:

Discharge Point	Receiving Water Name	Beneficial Use(s)
001, 003	Peters Canyon Wash, a tributary to San Diego Creek/Newport Bay	Present or potential: Warm freshwater habitat (WARM); wildlife habitat (WILD) Intermittent: Ground water recharge (GWR), contact (REC-1) and non-contact (REC-2) water recreation.
	San Diego Creek Reach 1	Present or potential: Warm freshwater habitat (WARM); wildlife habitat (WILD) Intermittent: Contact (REC-1) and non-contact (REC-2) water recreation.
	Upper and Lower Newport Bay	Present or potential: Wildlife habitat (WILD), preservation of rare, threatened or endangered species (RARE), navigation, commercial and sport fishing, preservation of biological habitats of special significance, spawning, reproduction, and development, marine habitat, shellfish harvesting, and estuarine habitat, contact (REC-1) and non-contact (REC-2) water recreation.
001, 002, 003	Irvine Groundwater Management Zone	Present or potential: Municipal and domestic water supply (MUN), agricultural supply, industrial service supply, and industrial process supply.

2. **National Toxics Rule (NTR) and California Toxics Rule (CTR).** USEPA adopted the NTR on December 22, 1992, which was amended on May 4, 1995 and November 9, 1999, and the CTR on May 18, 2000, which was amended on February 13, 2001. These rules include water quality criteria for priority pollutants and are applicable to this discharge.

3. **State Implementation Policy.** On March 2, 2000, the State Water Board adopted the *Policy for Implementation of Toxics Standards for Inland Surface Waters, Enclosed Bays, and Estuaries of California* (State Implementation Policy or SIP). The SIP became effective on April 28, 2000 with respect to the priority pollutant criteria promulgated for California by the USEPA through the NTR and to the priority pollutant objectives established by the Regional Water Board in the Basin Plan. The SIP became effective on May 18, 2000 with respect to the priority pollutant criteria promulgated by the USEPA through the California Toxics Rule. The State Water Board adopted amendments to the SIP on February 24, 2005 that became effective on July 13, 2005.

4. **Alaska Rule.** On March 30, 2000, USEPA revised its regulation that specifies when new and revised State and Tribal water quality standards (WQS) become effective for CWA purposes (40 CFR 131.21, 65 FR 24641, April 27, 2000). Under the revised regulation (also known as the Alaska rule), new and revised standards submitted to USEPA after May 30, 2000, must be approved by USEPA before being used for CWA purposes. The final rule also provides that standards already in effect and submitted to USEPA by May 30, 2000, may be used for CWA purposes, whether or not approved by USEPA.

5. **Stringency of Requirements for Individual Pollutants.** This Order contains restrictions on individual pollutants that are no more stringent than required by the federal CWA. Individual pollutant restrictions consist of technology-based restrictions and water quality-based effluent limitations. The technology-based effluent limitations consist of restrictions on pollutants listed. Restrictions on pollutants listed or referenced are specified in federal regulations as discussed in reference, and the permit's technology-based pollutant restrictions are no more stringent than required by the CWA. Water quality-based effluent limitations have been scientifically derived to implement water quality objectives that protect beneficial uses. Both the beneficial uses and the water quality objectives have been approved pursuant to federal law and are the applicable federal water quality standards. To the extent that toxic pollutant water quality-based effluent limitations were derived from the CTR, the CTR is the applicable standard pursuant to 40 CFR 131.38. The scientific procedures for calculating the individual water quality-based effluent limitations are based on the CTR-SIP, which was approved by USEPA on May 18, 2000. Most/All beneficial uses and water quality objectives contained in the Basin Plan were approved under state law and submitted to and approved by USEPA prior to May 30, 2000. Any water quality objectives and beneficial uses submitted to USEPA prior to May 30, 2000, but not approved by USEPA before that date, are nonetheless "applicable water quality standards for purposes of the CWA" pursuant to 40 CFR 131.21(c)(1). Collectively, this Order's restrictions on individual pollutants are no more stringent than required to implement the technology-based requirements of the CWA and the applicable water quality standards for purposes of the CWA.

6. **Antidegradation Policy.** Section 131.12 of 40 CFR requires that State water quality standards include an antidegradation policy consistent with the federal policy. The State Water Board established California's antidegradation policy in State Water Board Resolution No. 68-16. Resolution No. 68-16 incorporates the federal antidegradation policy where the federal policy applies under federal law. Resolution No. 68-16 requires that existing water quality be maintained unless degradation is justified based on specific findings. The Regional Water Board's Basin Plan implements, and incorporates by

reference, both the State and federal antidegradation policies. The permitted discharge is consistent with the antidegradation provision of 40 CFR Section 131.12 and State Water Board Resolution No. 68-16.

7. **Anti-Backsliding Requirements.** Sections 402(o)(2) and 303(d)(4) of the CWA and 40 CFR §122.44(l) prohibit backsliding in NPDES permits. These anti-backsliding provisions require that effluent limitations in a reissued permit must be as stringent as those in the previous permit, with some exceptions in which limitations may be relaxed. All effluent limitations in the Order are at least as stringent as the effluent limitations in the previous Order.

8. **Monitoring and Reporting Requirements.** Section 122.48 of 40 CFR requires that all NPDES permits specify requirements for recording and reporting monitoring results. Sections 13267 and 13383 of the CWC authorize the Regional Water Board to require technical and monitoring reports. The Monitoring and Reporting Program (MRP) establishes monitoring and reporting requirements to implement federal and State requirements. This MRP is provided in Attachment E.

D. Impaired Water Bodies on CWA 303(d) List

Section 303(d) of the CWA requires states to identify water bodies where water quality standards are not expected to be met after technology-based effluent limitations have been implemented for point sources. Placement on the 303(d) list triggers the requirement to develop Total Maximum Daily Loads (TMDLs) for the pollutant(s) causing impairment. The Regional Water Board placed San Diego Creek and Newport Bay on the 303(d) list due to nutrients and toxic pollutants (and other pollutants not relevant to this Order).

On June 14, 2002, the US Environmental Protection Agency, Region IX promulgated TMDLs for toxic pollutants for San Diego Creek and Newport Bay. These included a TMDL for selenium. As described in more detail below, in 1998 the Regional Board adopted Nutrient TMDLs for the San Diego Creek/Newport Bay watershed. Both the selenium and nutrient TMDLs specify certain wasteload and load allocations for discharges of nutrients and selenium into San Diego Creek and Newport Bay.

1. Nutrient TMDLs.

On April 17, 1998, the Regional Water Board adopted Resolution No. 98-9, amending the Basin Plan to incorporate a Nutrient Total Maximum Daily Load (TMDL) for the Newport Bay/San Diego Creek Watershed. The TMDL was amended by Resolution No. 98-100 on October 9, 1998 and thereafter approved by the State Water Resources Control Board, Office of Administrative Law and the US EPA. The nutrient TMDL was based upon the aesthetic and recreational nuisance created by algal blooms in Newport Bay, as well as the concern that these blooms may adversely affect wildlife. The TMDL establishes final targets that are based on a 50% reduction in nitrogen loading[2]. The TMDL requires that the 50% reduction be achieved no later than December 31, 2007 for summer loading (between April 1 and September 30); the 50% reduction in winter inputs (between October

[2] The TMDL also establishes targets for phosphorus.

1 and March 31) is to be achieved no later than December 31, 2012. While the TMDL requires reductions in nutrient loadings, it is recognized that too few nutrients in a waterbody can potentially adversely affect wildlife.

Consistent with the TMDL targets, the nutrient TMDL specifies wasteload and load allocations for total nitrogen mass inputs to the San Diego Creek/Newport Bay watershed from identified sources[3]. Nitrogen load allocations are specified for "undefined sources", which include rising groundwater, discharges associated with groundwater cleanup and dewatering, atmospheric deposition, open space inputs and in-bay sediment nitrogen. Again consistent with the TMDL targets, the load allocations for undefined sources require a 50% reduction in summer inputs by 2007, and a 50% reduction in winter inputs by 2012.

At their meeting on August 13, 2004, the Regional Water Board reviewed as an informational item a report prepared by Regional Water Board staff entitled "Newport Bay/San Diego Creek Watershed Total Maximum Daily Load (TMDL) Triennial Review" (Triennial Review Report). Among the conclusions presented in the Report was the finding that the overall TMDL nitrogen reduction targets for summer season 2007 have been achieved. Achievement of these targets was due largely to three factors: low rainfall; denitrification of diverted San Diego Creek flows in the Irvine Ranch Water District (IRWD) wetland ponds in the San Joaquin Marsh; and, nitrogen runoff control efforts in the watershed, particularly by the nurseries and Caltrans, which operates a denitrification facility for groundwater intercepted by a subdrain system[4]. Other than the IRWD pond treatment system and Caltrans, no significant measures have yet been implemented to reduce dewatering/other groundwater-related nutrient discharges. Some such measures are in the process of being implemented in the watershed. The Discharger has committed to the evaluation of treatment technologies and/or other measures to reduce nitrogen in its wastewater discharges.

The Triennial Review Report also finds that algal biomass in Newport Bay has significantly declined since the nutrient TMDL was adopted in 1998; blooms are now largely restricted to the Upper Bay and are less extensive than in prior years. The occurrence of early winter algal blooms in the Upper Bay suggests that more restrictive nitrogen water quality objectives for San Diego Creek may be necessary. The Regional Water Board is conducting studies to identify appropriate objectives. Given the complexity of defining these objectives, these studies are not expected to be complete before 2007. Any consideration of revised objectives is outside the scope of this Order.

Insufficient data were available during the development of the nutrient TMDL to identify specific load allocations for each of the components of the "undefined sources" category of nutrient inputs, including groundwater-related inflows to surface waters in the Newport Bay watershed. Because of insufficient data, baseline loading from the discharges regulated under this Order (and most other groundwater-related discharges) has not yet

---

3 The TMDL assigns phosphorus load allocations to open space and agricultural areas. No phosphorus load allocations are specified for groundwater-related discharges since these discharges are not expected to include phosphorus.

4 Discharges from the Caltrans facility are regulated under Order No. R8-2002-0093, NPDES No. CA8000390. These discharges are currently being discharged to the sewer system under temporary authorization from the Orange County Sanitation District.

been established in the TMDL. Summer 2002 data presented in the Triennial Review Report indicate that the total nitrogen load resulting from undefined sources, including groundwater-related inflows, was approximately 27,000 lbs. This figure does not include loads resulting from in-bay sediment nitrogen, which could not be quantified. Rising groundwater contributed an estimated 18,700 lbs and groundwater cleanup discharges accounted for approximately 1600 lbs. The load from groundwater dewatering discharges was approximately 5300 lbs; long-term dewatering discharges by the City of Irvine accounted for 87% of that load. An estimate of the nitrogen load contributed by the groundwater-related discharges that would be regulated under this Order is 690 lbs for 2002. The summer 2002 data likely underestimate the nitrogen loading that can be expected to result over the long-term from groundwater-related discharges authorized under this Order, since 2002 was a dry year, resulting in decreased groundwater table elevations and, likely, reduced groundwater-related inflows to surface waters and decreased need for dewatering.

The Nutrient TMDL implementation plan supports the trading of pollutant allocations, where appropriate, as a potential cost-effective method to achieve pollutant reduction. There is an ongoing effort by watershed stakeholders to design and implement a regional program to achieve the nitrogen reductions required by the TMDL (natural treatment systems). Implementation of this program, with participation by the groundwater dischargers, will likely enable the dischargers to achieve the requisite nitrogen mass reductions to Newport Bay.

On December 20, 2004, the Regional Water Board adopted Order No. R8-2004-0021, NPDES No. CAG998002, to regulate short-term groundwater-related discharges and de minimus wastewater discharges to surface waters within the San Diego Creek/Newport Bay Watershed. This Order was adopted, in part, to assure that discharges of nitrogen (and selenium) were regulated appropriately to implement the nutrient (and selenium) TMDLs. Certain of the short-term and long-term dischargers of groundwater-related wastewaters within the watershed have agreed to form a Nitrogen and Selenium Management Program Working Group (NSMP Working Group, or Working Group) to address the requirements of this Order. The Working Group has committed to fund and participate in a Work Plan. The tasks include the development of a nutrient offset, trading or mitigation program that is to be based on a comprehensive understanding of the groundwater-related nutrient inputs to surface waters in the Newport Bay watershed.

Completion of the approved Work Plan is expected to result in the development of a comprehensive understanding of and management plan for nitrogen and selenium (see discussion below) in groundwater-related inflows to surface waters in the Newport Bay watershed and as such, goes beyond issues specific to the discharges regulated under this Order. The management plans are expected to provide recommendations for specific load and wasteload allocations for the groundwater-related components of the "undefined source" category identified in the TMDL, in addition to offset, trading or mitigation program recommendations. Revisions to the TMDL and/or to the nutrient-related requirements in this Order may be necessary based on the results of the Work Plan assessments and resultant management plans.

This Order requires compliance with limitations for total nitrogen that are based on the nutrient TMDL. The Order allows implementation of an approved nitrogen offset program if the Discharger demonstrates that immediate compliance with the nitrogen limitations is infeasible. In accordance with the schedule identified in the nutrient TMDL, this Order requires that any such offset be completed as soon as possible but no later than December 31, 2007.

2. Selenium TMDL

On June 14, 2002, the U.S. EPA Region 9 established a total maximum daily load (TMDL) for selenium for San Diego Creek and Newport Bay. EPA also established TMDLs for other toxic pollutants in the watershed. The selenium TMDL is based on the selenium criteria specified in the CTR and in the National Toxics Rule (NTR). The EPA TMDL for selenium identified loading targets for specific groups of discharges but recognized that quantification of the baseline loading from dischargers of groundwater was infeasible due to the lack of selenium data. The EPA TMDLs do not include specific implementation requirements, such as compliance timeframes, interim numeric targets, etc, since implementation plans are the responsibility of the Regional Water Board. However, pursuant to federal regulations, the Regional Water Board is required to ensure that NPDES permits for discharges in this watershed contain effluent limitations necessary to be consistent with the wasteload allocations specified in the selenium TMDL (and other TMDLs). In the absence of an adopted implementation plan, the Regional Water Board can and must employ its legally authorized discretion in determining the appropriate permit provisions to implement these allocations. Regional Water Board staff is now working on an implementation plan for the selenium TMDL, which will be considered for future adoption as a Basin Plan amendment. Staff may also recommend revisions to the selenium TMDL established by EPA based on ongoing and forthcoming studies by EPA, Board staff and others. In its documents establishing the toxic TMDLs, EPA recognizes the substantial uncertainties that remain concerning selenium sources, biological effects, and the appropriate numeric objective that should apply to the protection of beneficial uses. EPA is now engaged in a review of the selenium objective in the CTR. Resolution of these uncertainties, and possible revision of the numeric selenium objective by EPA or through a site-specific objective process, is likely to require future refinement of the selenium TMDL. Any such refinement would necessitate review and revision, as appropriate, of this Order. Absent identification of effective and reasonable treatment technologies, source controls or pollution reduction measures for selenium, development of a site-specific objective for selenium in the Newport Bay watershed will be appropriate.

Both the CTR and the State Policy include provisions for compliance schedules for effluent limitations for selenium and other priority pollutants. Pursuant to the State Policy, up to ten years from the effective date of the State Policy, or no later than May 18, 2010, may be allowed to complete actions necessary to comply with CTR-criterion–based effluent limitations. These actions include the development and adoption of a site-specific objective, if appropriate, as provided in the Policy (Section 5.2). If the compliance schedule exceeds one year, interim limitations must be specified in NPDES permits and interim requirements to control the pollutant for which the compliance schedule is included may be imposed. These interim requirements may include pollutant minimization and source control measures. This Order requires that the Discharger meet the selenium final

limit by December 21, 2009. This date is the same compliance date specified for dischargers regulated under the General Permit Order No. R8-2004-0021, and for the City of Irvine, which like the Discharger, is a long-term groundwater-related Discharger. The City of Irvine's long-term groundwater-related discharges are regulated under Order No. R8-2005-0079, NPDES No.CA8000406.

This Order implements relevant provisions of the CTR, the EPA selenium TMDL for San Diego Creek and Newport Bay, and the State Board Policy by specifying interim performance-based and final numeric effluent limitations for selenium for the treated groundwater discharges. The Discharger must implement selenium reduction through reasonable treatment, source control, or pollution prevention measures when such measures become available during the five-year permit term. In addition, the Discharger may be able to reduce or eliminate selenium concentrations and mass discharges by the implementation of low technology best management practices (BMPs). Such volume-reduction and other BMPs will be investigated in an aggressive manner, including an evaluation of other potential positive and negative impacts that may result from the BMPs. See also Section II.E. - Planned Changes, above.

E. Other Plans, Polices and Regulations

No-mixing zone: In most areas of the watershed, there is no significant amount of receiving water at the point of discharge. Therefore, no mixing zone allowance is included in the calculation of effluent limits. Consequently, compliance with the effluent limits is required to be determined at the end of the discharge pipe or at a location prior to where the discharge enters the receiving water.

IV. RATIONALE FOR EFFLUENT LIMITATIONS AND DISCHARGE SPECIFICATIONS

The CWA requires point source discharges to control the amount of conventional, non-conventional, and toxic pollutants that are discharged into the waters of the United States. The control of pollutants discharged is established through effluent limitations and other requirements in NPDES permits. There are two principal bases for effluent limitations: 40 CFR §122.44(a) requires that permits include applicable technology-based limitations and standards; and 40 CFR §122.44(d) requires that permits include water quality-based effluent limitations to attain and maintain applicable numeric and narrative water quality criteria to protect the beneficial uses of the receiving water. Where numeric water quality objectives have not been established, three options exist to protect water quality: 1) 40 CFR §122.44(d) specifies that WQBELs may be established using USEPA criteria guidance under CWA Section 304(a); 2) proposed State criteria or a State policy interpreting narrative criteria supplemented with other relevant information may be used; or 3) an indicator parameter may be established.

A. Discharge Prohibitions

The discharge prohibitions are based on the requirements of the Basin Plan the California Water Code and are consistent with the requirements established for other dischargers in NPDES permits adopted by the Regional Water Board (Order Nos. R8-2002-0007, R8-2002-0033, and R8-2003-0085).

B. Technology-Based Effluent Limitations

1. Scope and Authority

The CWA requires that technology-based effluent limitations be established based on several levels of controls:

a. Best practicable treatment control technology (BPT) represents the average of the best performance by plants within an industrial category or subcategory. BPT standards apply to toxic, conventional, and nonconventional pollutants.

b. Best available technology economically achievable (BAT) represents the best existing performance of treatment technologies that are economically achievable within an industrial point source category. BAT standards apply to toxic and nonconventional pollutants.

c. Best conventional pollutant control technology (BCT) represents the control from existing industrial point sources of conventional pollutants including BOD, TSS, fecal coliform, pH, and oil and grease. The BCT standard is established after considering the "cost reasonableness" of the relationship between the cost of attaining a reduction in effluent discharge and the benefits that would result, and also the cost effectiveness of additional industrial treatment beyond BPT.

d. New source performance standards (NSPS) represent the best available demonstrated control technology standards. The intent of NSPS guidelines is to set limitations that represent state-of-the-art treatment technology for new sources.

The CWA requires USEPA to develop effluent limitations, guidelines and standards (ELGs) representing application of BPT, BAT, BCT, and NSPS. Section 402(a)(1) of the CWA and 40 CFR §125.3 of the NPDES regulations authorize the use of best professional judgment (BPJ) to derive technology-based effluent limitations on a case-by-case basis where ELGs are not available for certain industrial categories and/or pollutants of concern. Where BPJ is used, the permit writer must consider specific factors outlined in 40 CFR §125.3.

2. Technology-Based Effluent Limitations

1,2,3-trichloropropane (TCP) is a chemical of concern present in the influent at the IRP 13S TCRA and the UST 222 PCAP treatment systems. The technology the Discharger is currently using for treating the extracted groundwater has successfully reduced concentration of TCP below the detection limit of 0.5 µg/l. TCP is the only parameter that is technology based.

C. Water Quality-Based Effluent Limitations (WQBELs)

1. Scope and Authority

As specified in 40 CFR §122.44(d)(1)(i), permits are required to include WQBELs for pollutants (including toxicity) that are or may be discharged at levels that cause, have reasonable potential to cause, or contribute to an in-stream excursion above any State water quality standard. The process for determining reasonable potential and calculating WQBELs when necessary is intended to protect the designated uses of the receiving water as specified in the Basin Plan, and achieve applicable water quality objectives and criteria that are contained in other State plans and policies, or any applicable water quality criteria contained in the CTR and NTR.

2. Applicable Beneficial Uses and Water Quality Criteria and Objectives

The Water Quality Control Plan, Santa Ana Region, (the Basin Plan) was adopted by the Regional Water Board on March 11, 1994. The Basin Plan became effective on January 24, 1995. The Basin Plan establishes water quality objectives (for bacterial, physical, chemical, and biological characteristics, and for radioactivity), general requirements for management of waste discharged to the inland surface waters and enclosed bays and estuaries, quality requirements for wastes discharges (effluent quality requirements), discharge prohibitions, and general provisions, to protect beneficial uses.

The treated groundwater from the Station discharges to Peters Canyon Wash, San Diego Creek, and then to Newport Bay. The beneficial uses of these receiving waters include:

a. Navigation,
b. Water Contact Recreation,
c. Non-contact Water Recreation,
d. Commercial and Sportfishing,
e. Preservation of Biological Habitats of Special Significance,
f. Wildlife Habitat,
g. Rare, Threatened or Endangered Species,
h. Spawning, Reproduction, and Development,
i. Marine Habitat,
j. Shellfish Harvesting,
k. Estuarine Habitat,
l. Warm Freshwater Habitat, and
m. Groundwater Recharge (intermittent beneficial use).

Many surface waters within the region recharge underlying groundwater basins. The existing and potential beneficial uses of groundwater within the Newport Bay/San Diego Creek Watershed include:

a. Municipal and Domestic Supply,
b. Agricultural Supply,
c. Industrial Service Supply, and

d. Industrial Process Supply.

The Basin Plan establishes narrative and numeric water quality objectives for pH, oil and grease, total suspended solids, total residual chlorine, TDS, and total petroleum hydrocarbons:

pH: The pH of inland surface waters shall not be raised above 8.5 or depressed below 6.5 as a result of controllable water quality factors.

Oil and grease: Waste discharges shall not result in deposition of oil, grease, wax, or other materials in concentrations which result in a visible film or in coating objects in the water, or which cause a nuisance of adversely affect beneficial uses.

Total Suspended Solids: The Basin Plan established narrative water quality objectives for total suspended solids and settleable solids. The Basin Plan states that inland surface waters and enclosed bays shall not contain suspended or settleable solids in amounts, which cause a nuisance or adversely affect beneficial uses as a result of controllable water quality factors. To protect beneficial uses, this Order continues current permit limit, maximum concentration of 75 mg/l as total suspended solids limit.

Total Residual Chlorine: The Basin Plan established numeric water quality objectives for residual chlorine as 0.1 mg/l. Chlorine and its reactions products are toxic to aquatic life.

Total Petroleum Hydrocarbons: Spill of petroleum-derived chemicals can pose a serious threat to the public and environment.

TDS: Total Dissolved Solids: The Basin Plan does not specify a numeric water quality objective for TDS for Peters Canyon Wash. The TDS objective for San Diego Creek Reach 1, downstream of Peters Canyon Wash, is 1,500 mg/l.

3. Determining the Need for WQBELs

a. As discussed in Section III.D.1. Nutrient TMDL - The nutrient TMDL specifies wasteload and load allocations for total nitrogen mass inputs to the San Diego Creek/Newport Bay watershed from identified sources[5]. Nitrogen load allocations are specified for "undefined sources", which include rising groundwater, discharges associated with groundwater cleanup and dewatering, atmospheric deposition, open space inputs and in-bay sediment nitrogen. The load allocations for undefined sources require a 50% reduction in summer nitrogen inputs by 2007, and a 50% reduction in winter nitrogen inputs by 2012.

b. As discussed in Section III.D.2 above, U.S, EPA Region 9 established a total maximum daily load (TMDL) for selenium for San Diego Creek and Newport Bay on July 14, 2002. The selenium TMDL is based on the selenium criteria specified in the CTR and in the NTR.

---

5 The TMDL assigns phosphorus load allocations to open space and agricultural areas. No phosphorus load allocations are specified for groundwater-related discharges since these discharges are not expected to include phosphorus.

The U.S. EPA has identified 126 priority pollutants, including metals and organic chemicals, and has promulgated water quality objectives for many of these substances in the California Toxics Rule and National Toxics Rule. The State Water Board's Policy for Implementation of Toxics Standards for Inland Surface Waters, Enclosed Bays and Estuaries of California (SIP) specifies the procedures that are to be used in implementing these objectives in waste discharge requirements. Numeric effluent limitations must be specified for those priority pollutants that are determined to have the reasonable potential to cause or contribute to a violation of the applicable objectives.

To determine reasonable potential for pollutants to exceed water quality objectives, Board staff used the procedures outlined in the Section 1.3 of the SIP. A reasonable potential analysis (RPA) is conducted for each priority pollutant with an applicable criterion or objective to determine if a WQBEL is required in the Order. The Regional Water Board analyzed effluent and receiving water data to determine if a pollutant in a discharge has the reasonable potential to cause or contribute to an excursion above a state water quality standard. For all parameters that have the reasonable potential to cause or contribute to an excursion above a water standard, numeric WQBEL are required. To conduct the RPA, this Regional Water Board identified the maximum observed effluent concentration (MEC) and maximum background concentration (B) in the receiving water for each constituent, based on data provided by the Discharger in its NPDES permit application and monitoring data.

Section 1.3 of the SIP provided the procedures for determining reasonable potential to exceed applicable water quality criteria and objectives. The SIP specifies three-process analysis to complete a RPA:

1) Process Analysis 1 - If the MEC is greater than or equal to the CTR water quality criteria or applicable objective (C), a limit is needed.

2) Process Analysis 2 – If the MEC <C, and background water quality (B) >C, limit is needed.

3) Process Analysis 3 – If other related information determines the need for WQBEL.

Sufficient effluent and ambient data are needed to conduct a complete RPA. If data are not sufficient, the Discharger will be required to gather the appropriate data for the Regional Water Board to conduct the RPA. Upon review of the data, and if the Regional Water Board determines that WQBEL are needed to protect the beneficial uses, the permit will be reopened for appropriate modification.

The RPA was performed for Selenium using available data for discharge points 001 and 003.

c. Groundwater pollutant plumes in the Tustin Basin are complex mixtures of hundreds of petroleum-related compounds (e.g., gasoline contains over 200 chemicals) and solvents. The State and the US EPA have not proposed/established quality objectives for many of the petroleum hydrocarbon compounds. Therefore, indicator constituents for the detection and evaluation of complex mixtures of petroleum related compounds

such as gasoline is used in monitoring groundwater discharged to surface waters in the Santa Ana Region. The indicator constituents used for evaluating compliance for discharges of gasoline related products are benzene, toluene, ethylbenzene, xylene (BTEX) and total petroleum hydrocarbons. For chlorinated hydrocarbon solvents such as trichloroethylene (TCE) and tetrachloroethylene (PCE), the specific chemical constituents and/or their degradation products can be used to evaluate compliance with the permit limitations. The limits for these constituents are based on EPA's Maximum Contaminant Levels (MCLs) and/or DHS/OEHHA MCLs and notification levels to protect public health.

d. To reduce the amount of carbon monoxide in the atmosphere and abate air pollution, oxygenated fuels were required by the USEPA in select metropolitan areas such as Southern California. Fuel oxygenates are also used to enhance the octane of conventional gasoline. To date, Methyl tertiary-butyl ether (MTBE) has been the most commonly used fuel oxygenate. Oxygenates in limited commercial use also include ethyl tert-butyl ether (ETBE) and tert-amyl methyl ether (TAME). Accidental releases of gasoline to the subsurface from underground storage tanks, pipelines, refueling facilities, and landfills provide point sources for entry of oxygenates into the hydrologic cycle, together with the gasoline hydrocarbons. MTBE, as well as other alkyl ether oxygenates, ETBE and TAME are much less biodegradable than BTEX hydrocarbons in ground water. Furthermore, the fuel oxygenates sorb only weakly to soil and aquifer material, thereby increasing the risk of groundwater contamination. On March 26, 1999, the Governor concluded that the use of MTBE in California gasoline poses a significant risk to California's environment, and directed that MTBE be phased out of California gasoline as soon as possible. Based on the risks to California's environment, the California Department of Health Services (CDHS) established a maximum contaminant level for MTBE in drinking water of 5 micrograms per liter.

   Tert Butyl Alcohol (TBA) is also being detected in effluent streams and, like MTBE, it poses a threat to water quality. In 1999, CDHS established a drinking water notification level for Tert Butyl Alcohol (TBA) at 12 µg/l.

e. 1,2,3-trichloropropane (TCP) is a chemical of concern present in the influent at the IRP 13S TCRA and the UST 222 PCAP treatment systems. In 1999, CDHS established a drinking water notification level for TCP at 0.005 µg/l. "Notification Level" means the concentration of a contaminant in drinking water delivered for human consumption that CDHS has determined, based on available scientific information, does not pose a significant health risk but warrants notification. Notification levels are nonregulatory, health-based advisory levels established by the department for contaminants in drinking water for which maximum contaminant levels have not been established. Notification levels are established as precautionary measures for contaminants that may be considered candidates for establishment of maximum contaminant levels, but have not yet undergone or completed the regulatory standard setting process prescribed for the development of maximum contaminant levels. They are not drinking water standards. CDHS recommends that a drinking water system take the source out of service if TCP concentrations reaches 100 times the notification level. The CDHS Response Level for TCP is 0.5 µg/L. "Response level" means the concentration of a contaminant in drinking water delivered for human consumption at which the department recommends

that additional steps, beyond notification, be taken to reduce public exposure to the contaminant. Response levels are established in conjunction with notification levels for contaminants that may be considered candidates for establishment of maximum contaminant levels, but have not yet undergone or completed the regulatory standard setting process prescribed for the development of maximum contaminant levels. Again, they are not drinking water standards. This Order includes an average monthly and a maximum daily effluent limit for 1,2,3-TCP at 0.5 µg/L and 1.01 µg/L, respectively, for surface water discharges.

e. Discharge limitations are included in this Order for those other chemicals of concern that typically pollute groundwater in the Santa Ana Region. In addition, the monitoring program includes analysis for additional constituents to determine the overall impact of individual discharges and to screen for unexpected chemicals.

f. Discharge limitations for lead are also included in the Order. For discharges to fresh water and enclosed bays and estuaries the limits are based on U.S. EPA's California Toxics Rule (CTR). In some cases, these CTR criteria are equations in which hardness is the variable. The actual numeric value of the criterion is calculated using hardness measurements. The hardness concentration of the wastewater discharged from the site is over 1,000 mg/l. To conform with limitations for using the criteria equations, a maximum fixed effluent hardness value of 400 mg/l will be used in the criteria equations. Federal regulations require that the effluent limits for metals be expressed as the total recoverable form. To comply with this requirement, the dissolved criteria are translated into total recoverable effluent limits using ratios of the total recoverable metals to dissolved metals (t/d) concentrations. The SIP stipulates that in the absence of site-specific information, the conversion factors cited in the CTR should be used as the t/d translators. The lead limits are:

Hardness, mg/l	Maximum Daily Effluent Limit, µg/l	Average Monthly Effluent Limit, µg/l
400	30.45	15.18

4. WQBEL Calculations

Calculation of selenium effluent limits is summarized below.

PERMIT LIMIT CALCULATION

unit in ug/l

					CV = .66			Aquatic		Human		Permit Limit	
	Caltoxics				Acute M	Chronic M	LTA	Objective/limits		Health Limits		Concentration Limit	
	Freshwater		Human Health		0.297	0.499		3.38	1.61	2.10			
Constituent	CMC	CCC	H_2O+Org	Org only	Acute LTA	Chronic LTA		MDEL	AMEL	MDEL	AMEL	MDEL	AMEL
Selenium	0.00	5.00			0.00	2.50	2.50	8.43	4.02			8.4	4.0

D. Interim Effluent Limitations

This Order implements relevant provisions of the CTR, the EPA selenium TMDL for San Diego Creek and Newport Bay, and the State Board Policy, by specifying final numeric effluent limitations for selenium. At the present time, the Discharger cannot achieve compliance with selenium numeric effluent limitations through reasonable treatment, source control, or pollution prevention measures as such measures are not currently available. Moreover, if and when selenium treatment technology becomes available, it may take the Discharger time to meet the final Selenium limit, due to requisite funding availability, purchasing and necessary construction/installation periods. Both the CTR and the State Policy include provisions for compliance schedules for effluent limitations for selenium and other priority pollutants. In accordance with the CTR and State Policy, this Order specifies a schedule for compliance with the final effluent limitations for selenium.

With regard to the selenium contained in the discharges subject to this Order by the Discharger as a NSMP Working Group member, the requirements specified in IV.A.1.b constitute interim, performance-based limitations and compliance schedules for these discharges.

If the Discharger does not become or does not remain a Working Group member and elects to implement a selenium offset program as provided in Provision VI.C.6.b., the Discharger's efforts to reduce/eliminate selenium discharges coupled with interim steps necessary to implement an acceptable offset constitute interim performance-based limitations.

This Order requires the Discharger to submit a proposed plan and schedule for achieving compliance with the final selenium effluent limitations, as plan in the Working Group. The Discharger is required to implement that plan and schedule upon the Executive Officer's approval. Quarterly progress reports are also required to be submitted.

Violation(s) of interim effluent limitations are subject to the same enforcement remedies provided in the Water Code for violation(s) of final effluent limits.

E. Land Discharge Specifications

Up to 28,800 gpd of the treated groundwater will be re-injected to the ground, percolated onsite, or used for landscape irrigation within the same groundwater basin. The effluent limitations for gasoline and solvents pollutant of concern are based on CDHS' maximum contaminant level standards for protection of public health.

F. Reclamation Specifications—Not Applicable

V. RATIONALE FOR RECEIVING WATER LIMITATIONS

A. Surface Water

Narrative and numeric receiving water limitations have been established in this Order based on water quality objectives specified in Chapter 4 of the Basin Plan to ensure the reasonable protection of beneficial uses and the prevention of nuisance.

B. Groundwater

Narrative objectives specified in the Basin Plan apply.

VI. RATIONALE FOR MONITORING AND REPORTING REQUIREMENTS

Section 122.48 of 40 CFR requires all NPDES permits to specify recording and reporting of monitoring results. Sections 13267 and 13383 of the CWC authorize the Water Board to require technical and monitoring reports. The MRP, Attachment E of this Order, establishes monitoring and reporting requirements to implement federal and State requirements. The following provides the rationale for the monitoring and reporting requirements contained in the MRP for this facility.

A. Influent Monitoring

To determine the effectiveness of the treatment system employed at the site, influent monitoring is required to be conducted by the Discharger.

B. Effluent Monitoring

The Discharger is required to conduct monitoring of the permitted discharges in order to evaluate compliance with permit conditions. Monitoring requirements are given in the proposed monitoring and reporting program (Attachment E). This Order includes effluent monitoring that is similar to the effluent-monitoring program that was adopted for:

1. General Groundwater Cleanup for Discharges to Surface Waters of Extracted and Treated Groundwater Resulting from the Cleanup of Groundwater Polluted by Petroleum Hydrocarbons, Solvents and /or Petroleum Hydrocarbons mixed with lead and/or Solvents Order No. Rb8-2002-007, NPDES No. CAG918001;

2. General Waste Discharge Requirements for the Reinjection/percolation of Extracted and treated Groundwater Resulting from the Cleanup of Groundwater Polluted by Petroleum Hydrocarbons, Solvents and /or Petroleum Hydrocarbons mixed with lead and/or Solvents Order No. RB8-2002-0033;

3. Order No. R8-2003-0085 revised the maximum daily effluent concentrations limits specified in Order No. Re-2002-0007 and in Order R8-2002-0033 with the addition of monitoring for selenium and total nitrogen and 1,2,3 trichloropropane;

4. General Waste Discharge Requirements for short-term groundwater-related discharges and de minimus wastewater discharges to surface waters within the San Diego Creek/Newport Bay watershed, Order No. R8-2004-0021, NPDES No. CAG998002; and

The monitoring requirements for Cadmium, Copper, Nickel, and Zinc are based on the need to address metals TMDL requirements and the development of an appropriate implementation plan.

Perchlorate was monitored weekly under the current general discharge-monitoring permit for over 1 year. The analytical results were less than 4 microgram per liter. Therefore, perchlorate is not considered a pollutant of concern at this facility and the frequency of monitoring will be reduced to annually.

A specific test method for selenium is specified in this Order based on studies and recommendation by the NSMP Work Group. The test method specified is intended to reduce a wide range of errors that result when different test methods for selenium determination are used.

C. Whole Effluent Toxicity Testing Requirements

Consistent with other permitted groundwater cleanup projects, the Disharger is required to conduct annual toxicity testing of the treated effluent that is discharged to surface waters.

D. Receiving Water Monitoring – Not Applicable

E. Other Monitoring Requirements – Not Applicable

VII. RATIONALE FOR PROVISIONS

A. Standard Provisions

1. Standard Provisions

Federal Standard Provisions which in accordance with 40 CFR sections 122.41and 122.42, apply to all NPDES discharges and must be included in every NPDES permit, are provided in Attachment D to the Order.

Title 40 CFR Section 122.41(a)(1) and (b) through (n) establish conditions that apply to all State-issued NPDES permits. These conditions must be incorporated into the permits either expressly or by reference. If incorporated by reference, a specific citation to the regulations must be included in the Order. Title 40 CFR Section 123.25(a)(12) allows the State to omit or modify conditions to impose more stringent requirements. In accordance with Section 123.25, this Order omits federal conditions that address enforcement authority specified in 40 CFR Sections 122.41(j)(5) and (k)(2) because the enforcement authority under the CWC is more stringent. In lieu of these conditions, this Order incorporates by reference CWC Section 13387(e).

2. Regional Water Board Standard Provisions

Regional Water Board Standard Provisions are based on the Clean Water Act, U.S. EPA regulations, and the California Water Code.

Standard Provisions, which in accordance with 40 CFR §§122.41and 122.42, apply to all NPDES discharges and must be included in every NPDES permit, are provided in Attachment C to the Order.

B. Special Provisions

1. Reopener Provisions

To facilitate addressing changes in regulations, policies including revisions to the Basin Plan, newly determined presence of pollutants in the discharge and or demonstrated toxicity in the effluent, reopener provisions that specify the conditions for which this Order may be reopened are included in the Order.

2. Special Studies and Additional Monitoring Requirements

This Order requires the Discharger to immediately stop the discharge whenever the discharge fails the toxicity test(s). Prior to resuming the discharge, the Discharger is required to identify and correct the source of the toxicity to the satisfaction of the Executive Officer. This provision is based on the SIP, Section 4, Toxicity Control Provisions.

3. Best Management Practices and Pollution Prevention

The Order requires the Discharger to submit a plan and schedule to identify/evaluate and implement BMPS to reduce selenium, nitrogen and TDS discharges. The plan and schedule is to be implemented upon approval by the Regional Board Executive Officer.

4. Compliance Schedules

This Order establishes final effluent limitations for selenium that are new limits for the discharges. This Order also contains a compliance schedule that provides the Discharger time to bring their discharges into compliance with the newly established final limits. The provision for the compliance schedule is based on Section 2.1 (Compliance Schedules) of the SIP. The proposed permit allows the Discharger up to December 21, 2009[1] to achieve compliance with the final Se limitation. The Discharger is required to develop a compliance and a pollution minimization plan to ensure that the Discharger achieves compliance with the final limitations. Quarterly reporting is required to inform the Regional Water Board about the progress made by the Discharger to achieve compliance with the final limitations within the specified time.

---

1 This date is the date when permittees under the General Permit Order NO. R8-2004-0021 are required to comply with the final effluent limitation for selenium in the Order.

5. **Construction, Operation, and Maintenance Specifications**
The requirements are intended to assure that the Discharger's treatment systems are safely and effectively operated and maintained by properly trained operating personnel onsite.

6. **Other Special Provisions**
The requirements in the Other Special Provisions of the Order are comparable to those imposed on other groundwater dischargers ie those enrolled under Order No. R8-2004-0021 and the City of Irvine. The intent is to ensure a consistent approach in regulating selenium and nutrient discharges into surface waters in the Newport Bay/San Diego Creek watershed.

VIII. PUBLIC PARTICIPATION

The California Regional Water Quality Control Board, Santa Ana Region (Regional Water Board) is considering the issuance of waste discharge requirements (WDRs) that will serve as a National Pollutant Discharge Elimination System (NPDES) permit for Groundwater cleanup facilities at former MCAS Tustin. As a step in the WDR adoption process, the Regional Water Board staff has developed tentative WDRs. The Regional Water Board encourages public participation in the WDR adoption process.

A. Notification of Interested Parties

The Regional Water Board has notified the Discharger and interested agencies and persons of its intent to prescribe waste discharge requirements for the discharge and has provided them with an opportunity to submit their written comments and recommendations. Notification was provided through the following letters and website of Regional Water Board. Notification was provided on February 1, 2006 through sending letters to interested agencies and parties, posting of the Notice of Public Hearing at Tustin City Hall, and posting the Tentative Order at the Regional Water Board website http://www.waterboards.ca.gov/santaana on February 1, 2006. The Notice was posted at Tustin City Hall March 13, 2006.

B. Written Comments

The staff determinations are tentative. Interested persons are invited to submit written comments concerning these tentative WDRs. Comments must be submitted either in person or by mail to the Executive Office at the Regional Water Board at the address above on the cover page of this Order.

To be fully responded to by staff and considered by the Regional Water Board, written comments should be received at the Regional Water Board offices by 5:00 p.m. on April 3, 2006 to:

Patricia Hannon
California Regional Water Quality Control Board
Santa Ana Region
3737 Main Street, Suite 500
Riverside, CA 92501-3348

C. Public Hearing

The Regional Water Board will hold a public hearing on the tentative WDRs during its regular Board meeting on the following date and time and at the following location:

Date:	**April 21, 2006**
Time:	**9 am**
Location:	**City Council Chambers of Loma Linda** **25541 Barton Road** **Loma Linda, CA 92354**

Interested persons are invited to attend. At the public hearing, the Regional Water Board will hear testimony, if any, pertinent to the discharge, WDRs, and permit. Oral testimony will be heard; however, for accuracy of the record, important testimony should be in writing.

Please be aware that dates and venues may change. Our web address is http://www.waterboards.ca.gov/santaana where you can access the current agenda for changes in dates and locations.

D. Waste Discharge Requirements Petitions

Any aggrieved person may petition the State Water Resources Control Board to review the decision of the Regional Water Board regarding the final WDRs. The petition must be submitted within 30 days of the Regional Water Board's action to the following address:

State Water Resources Control Board
Office of Chief Counsel
P.O. Box 100, 1001 I Street
Sacramento, CA 95812-0100

E. Information and Copying

The Report of Waste Discharge (RWD), related documents, tentative effluent limitations and special provisions, comments received, and other information are on file and may be inspected at the address above at any time between 8:30 a.m. and 4:45 p.m., Monday through Friday. Copying of documents may be arranged through the Regional Water Board by calling (951) 782-4130.

F. Register of Interested Persons

Any person interested in being placed on the mailing list for information regarding the WDRs and NPDES permit should contact the Regional Water Board, reference this facility, and provide a name, address, and phone number.

G. Additional Information

Requests for additional information or questions regarding this order should be directed to Jane Qiu at (951) 320-2008.

ATTACHMENT G – MINIMUM LEVELS

MINIMUM LEVELS IN PPB (µg/l)

Table 1- VOLATILE SUBSTANCES[1]	GC	GCMS
Acrolein	2.0	5
Acrylonitrile	2.0	2
Benzene	0.5	2
Bromoform	0.5	2
Carbon Tetrachloride	0.5	2
Chlorobenzene	0.5	2
Chlorodibromomethane	0.5	2
Chloroethane	0.5	2
Chloroform	0.5	2
Dichlorobromomethane	0.5	2
1,1 Dichloroethane	0.5	1
1,2 Dichloroethane	0.5	2
1,1 Dichloroethylene	0.5	2
1,2 Dichloropropane	0.5	1
1,3 Dichloropropylene (volatile)	0.5	2
Ethylbenzene	0.5	2
Methyl Bromide (*Bromomethane*)	1.0	2
Methyl Chloride (*Chloromethane*)	0.5	2
Methylene Chloride (*Dichloromethane*)	0.5	2
1,1,2,2 Tetrachloroethane	0.5	1
Tetrachloroethylene	0.5	2
Toluene	0.5	2
trans-1,2 Dichloroethylene	0.5	1
1,1,1 Trichloroethane	0.5	2
1,1,2 Trichloroethane	0.5	2
Trichloroethylene	0.5	2
Vinyl Chloride	0.5	2
1,2 Dichlorobenzene (volatile)	0.5	2
1,3 Dichlorobenzene (volatile)	0.5	2
1,4 Dichlorobenzene (volatile)	0.5	2

Selection and Use of Appropriate ML Value:

ML Selection: When there is more than one ML value for a given substance, the Discharger may select any one of those ML values, and their associated analytical methods, listed herein that are below the calculated effluent limitation for compliance determination. If no ML value is below the effluent limitation, then the Discharger shall select the lowest ML value, and its associated analytical method, listed herein .

ML Usage: The ML value listed herein represents the lowest quantifiable concentration in a sample based on the proper application of all method-based analytical procedures and the absence of any matrix interferences. Assuming that all method-specific analytical steps are followed, the ML value will also represent, after the appropriate application of method-specific factors, the lowest standard in the calibration curve for that specific analytical technique. Common analytical practices sometimes require different treatment of the sample relative to calibration standards.
Note: chemical names in parenthesis and italicized is another name for the constituent.

1 The normal method-specific factor for these substances is 1, therefore, the lowest standard concentration in the calibration curve is equal to the above ML value for each substance.

MINIMUM LEVELS IN PPB (µg/l)

Table 2 – Semi-Volatile Substances[2]	GC	GCMS	LC
2-Chloroethyl vinyl ether	1	1	
2 Chlorophenol	2	5	
2,4 Dichlorophenol	1	5	
2,4 Dimethylphenol	1	2	
4,6 Dinitro-2-methylphenol	10	5	
2,4 Dinitrophenol	5	5	
2- Nitrophenol		10	
4- Nitrophenol	5	10	
4 Chloro-3-methylphenol	5	1	
2,4,6 Trichlorophenol	10	10	
Acenaphthene	1	1	0.5
Acenaphthylene		10	0.2
Anthracene		10	2
Benzidine		5	
Benzo (a) Anthracene (*1,2 Benzanthracene*)	10	5	
Benzo(a) pyrene (*3,4 Benzopyrene*)		10	2
Benzo (b) Flouranthene (*3,4 Benzofluoranthene*)		10	10
Benzo(g,h,i)perylene		5	0.1
Benzo(k)fluoranthene		10	2
bis 2-(1-Chloroethoxyl) methane		5	
bis(2-chloroethyl) ether	10	1	
bis(2-Chloroisopropyl) ether	10	2	
bis(2-Ethylhexyl) phthalate	10	5	
4-Bromophenyl phenyl ether	10	5	
Butyl benzyl phthalate	10	10	
2-Chloronaphthalene		10	
4-Chlorophenyl phenyl ether		5	
Chrysene		10	5
Dibenzo(a,h)-anthracene		10	0.1
1,2 Dichlorobenzene (semivolatile)	2	2	
1,3 Dichlorobenzene (semivolatile)	2	1	
1,4 Dichlorobenzene (semivolatile)	2	1	
3,3' Dichlorobenzidine		5	
Diethyl phthalate	10	2	
Dimethyl phthalate	10	2	
di-n-Butyl phthalate		10	
2,4 Dinitrotoluene	10	5	
2,6 Dinitrotoluene		5	
di-n-Octyl phthalate		10	
1,2 Diphenylhydrazine		1	
Fluoranthene	10	1	0.05
Fluorene		10	0.1
Hexachloro-cyclopentadiene	5	5	
1,2,4 Trichlorobenzene	1	5	

MINIMUM LEVELS IN PPB (µg/l)

Table 2 - SEMI-VOLATILE SUBSTANCES[2]	GC	GCMS	LC	COLOR
Pentachlorophenol	1	5		
Phenol [3]	1	1		50
Hexachlorobenzene	5	1		
Hexachlorobutadiene	5	1		
Hexachloroethane	5	1		
Indeno(1,2,3,cd)-pyrene		10	0.05	
Isophorone	10	1		
Naphthalene	10	1	0.2	
Nitrobenzene	10	1		
N-Nitroso-dimethyl amine	10	5		
N-Nitroso -di n-propyl amine	10	5		
N-Nitroso diphenyl amine	10	1		
Phenanthrene		5	0.05	
Pyrene		10	0.05	

Table 3– INORGANICS[4]	FAA	GFAA	ICP	ICPMS	SPGFAA	HYDRIDE	CVAA	COLOR	DCP
Antimony	10	5	50	0.5	5	0.5			1000
Arsenic		2	10	2	2	1		20	1000
Beryllium	20	0.5	2	0.5	1				1000
Cadmium	10	0.5	10	0.25	0.5				1000
Chromium (total)	50	2	10	0.5	1				1000
Chromium VI	5							10	
Copper	25	5	10	0.5	2				1000
Lead	20	5	5	0.5	2				10000
Mercury				0.5			0.2		
Nickel	50	5	20	1	5				1000
Selenium		5	10	2	5	1			1000
Silver	10	1	10	0.25	2				1000
Thallium	10	2	10	1	5				1000
Zinc	20		20	1	10				1000
Cyanide								5	

2 With the exception of phenol by colorimetric technique, the normal method-specific factor for these substances is 1000, therefore, the lowest standards concentration in the calibration curve is equal to the above ML value for each substance multiplied by 1000.

3 Phenol by colorimetric technique has a factor of 1.

4 The normal method-specific factor for these substances is 1, therefore, the lowest standard concentration in the calibration curve is equal to the above ML value for each substance.

MINIMUM LEVELS IN PPB (µg/l)

Table 4- PESTICIDES – PCBs[5]	GC
Aldrin	0.005
alpha–BHC (*a-Hexachloro-cyclohexane*)	0.01
beta–BHC (*b-Hexachloro-cyclohexane*)	0.005
Gamma–BHC (*Lindane; g-Hexachloro-cyclohexane*)	0.02
Delta-BHC (*d-Hexachloro-cyclohexane*)	0.005
Chlordane	0.1
4,4'-DDT	0.01
4,4'-DDE	0.05
4,4'-DDD	0.05
Dieldrin	0.01
Alpha-Endosulfan	0.02
Beta-Endosulfan	0.01
Endosulfan Sulfate	0.05
Endrin	0.01
Endrin Aldehyde	0.01
Heptachlor	0.01
Heptachlor Epoxide	0.01
PCB 1016	0.5
PCB 1221	0.5
PCB 1232	0.5
PCB 1242	0.5
PCB 1248	0.5
PCB 1254	0.5
PCB 1260	0.5
Toxaphene	0.5

Techniques:
GC - Gas Chromatography
GCMS - Gas Chromatography/Mass Spectrometry
HRGCMS - High Resolution Gas Chromatography/Mass Spectrometry (i.e., EPA 1613, 1624, or 1625)
LC - High Pressure Liquid Chromatography
FAA - Flame Atomic Absorption
GFAA - Graphite Furnace Atomic Absorption
HYDRIDE - Gaseous Hydride Atomic Absorption
CVAA - Cold Vapor Atomic Absorption
ICP - Inductively Coupled Plasma
ICPMS - Inductively Coupled Plasma/Mass Spectrometry
SPGFAA - Stabilized Platform Graphite Furnace Atomic Absorption (i.e., EPA 200.9)
DCP - Direct Current Plasma
COLOR – Colorimetric

5 The normal method-specific factor for these substances is 100, therefore, the lowest standard concentration in the calibration curve is equal to the above ML value for each substance multiplied by 100.

ATTACHMENT H – EPA PRIORITY POLLUTANT LIST

EPA PRIORITY POLLUTANT LIST		
Metals	**Acid Extractibles**	**Base/Neutral Extractibles (continuation)**
Antimony	2-Chlorophenol	Hexachloroethane
Arsenic	2,4-Dichlorophenol	Indeno (1,2,3-cd) Pyrene
Beryllium	2,4-Dimethylphenol	Isophorone
Cadmium	2-Methyl-4,6-Dinitrophenol	Naphthalene
Chromium (III)	2,4-Dinitrophenol	Nitrobenzene
Chromium (VI)	2-Nitrophenol	N-Nitrosodimethylamine
Copper	4-Nitrophenol	N-Nitrosodi-N-Propylamine
Lead	3-Methyl-4-Chlorophenol	N-Nitrosodiphenylamine
Mercury	Pentachlorophenol	Phenanthrene
Nickel	Phenol	Pyrene
Selenium	2, 4, 6 – Trichlorophenol	1,2,4-Trichlorobenzene
Silver	**Base/Neutral Extractibles**	**Pesticides**
Thallium	Acenaphthene	Aldrin
Zinc	Acenaphthylene	Alpha BHC
Miscellaneous	Anthracene	Beta BHC
Cyanide	Benzidine	Delta BHC
Asbestos (not required unless requested)	Benzo (a) Anthracene	Gamma BHC
2,3,7,8-Tetrachlorodibenzo-P-Dioxin (TCDD)	Benzo (a) Pyrene	Chlordane
Volatile Organics	Benzo (b) Fluoranthene	4, 4' - DDT
Acrolein	Benzo (g,h,i) Perylene	4, 4' - DDE
Acrylonitrile	Benzo (k) Fluoranthene	4, 4' - DDD
Benzene	Bis (2-Chloroethoxy) Methane	Dieldrin
Bromoform	Bis (2-Chloroethyl) Ether	Alpha Endosulfan
Carbon Tetrachloride	Bis (2-Chloroisopropyl) Ether	Beta Endosulfan
Chlorobenzene	Bis (2-Ethylhexyl) Phthalate	Endosulfan Sulfate
Chlorodibromomethane	4-Bromophenyl Phenyl Ether	Endrin
Chloroethane	Butylbenzyl Phthalate	Endrin Aldehyde
2-Chloroethyl Vinyl Ether	2-Chloronaphthalene	Heptachlor
Chloroform	4-Chlorophenyl Phenyl Ether	Heptachlor Epoxide
Dichlorobromomethane	Chrysene	PCB 1016
1,1-Dichloroethane	Dibenzo (a,h) Anthracene	PCB 1221
1,2-Dichloroethane	1,2-Dichlorobenzene	PCB 1232
1,1-Dichloroethylene	1,3-Dichlorobenzene	PCB 1242
1,2-Dichloropropane	1,4-Dichlorobenzene	PCB 1248
1,3-Dichloropropylene	3,3'-Dichlorobenzidine	PCB 1254
Ethylbenzene	Diethyl Phthalate	PCB 1260
Methyl Bromide	Dimethyl Phthalate	Toxaphene
Methyl Chloride	Di-n-Butyl Phthalate	
Methylene Chloride	2,4-Dinitrotoluene	
1,1,2,2-Tetrachloroethane	2-6-Dinitrotoluene	
Tetrachloroethylene	Di-n-Octyl Phthalate	
Toluene	1,2-Dipenylhydrazine	
1,2-Trans-Dichloroethylene	Fluoranthene	
1,1,1-Trichloroethane	Fluorene	
1,1,2-Trichloroethane	Hexachlorobenzene	
Trichloroethylene	Hexachlorobutadiene	
Vinyl Chloride	Hexachlorocyclopentadiene	

ATTACHMENT I – PRACTICAL QUANTITATION LEVELS

PRACTICAL QUANTITATION LEVELS			
	Constituent	**RL, µg/l**	**Analysis Method**
1	Arsenic	7.5	GF/AA
2	Barium	20	ICP/GFAA
3	Cadmium	15	ICP
4	Chromium (VI)	15.0	ICP
5	Cobalt	10.0	GF/AA
6	Copper	19.0	GF/ICP
7	Cyanide	50.0	335.2/335.3
8	Iron	100.0	ICP
9	Lead	26.0	GF/AA
10	Manganese	20.0	ICP
11	Mercury	0.5	CV/AA
12	Nickel	50.0	ICP
13	Selenium	14.0	GF/HYDRIDE GENERATION
14	Silver	16.0	ICP
15	Zinc	20	ICP
16	1,2 - Dichlorobenzene	5.0	601/602/624
17	1,3 - Dichlorobenzene	5.0	601
18	1,4 - Dichlorobenzene	5.0	601
18	2,4 - Dichlorophenol	10.0	625/604
20	4 - Chloro -3-methylphenol	10.0	625/604
21	Aldrin	0.04	608
22	Benzene	1.0	602/624
23	Chlordane	0.30	608
24	Chloroform	5.0	601/624
25	DDT	0.10	608
26	Dichloromethane	5.0	601/624
27	Dieldrin	0.10	608
28	Fluorantene	10.0	625/610
29	Endosulfan	0.50	608
30	Endrin	0.10	608
31	Halomethanes	5.0	601/624
32	Heptachlor	0.03	608
33	Hepthachlor Epoxide	0.05	608
34	Hexachlorobenzene	10.0	625
35	Hexachlorocyclohexane		
	Alpha	0.03	608
	Beta	0.03	608
	Gamma	0.03	608
36	PAH's	10.0	625/610
37	PCB	1.0	608
38	Pentachlorophenol	10.0	625/604
39	Phenol	10.0	625/604
40	TCDD Equivalent	0.05	8280
41	Toluene	1.0	602/625
42	Toxaphene	2.0	608
43	Tributyltin	0.02	GC
44	2,4,6-Trichlorophenol	10.0	625/604