California Regional Water Quality Control Board

Santa Ana Region

3737 Main Street, Suite 500, Riverside, California 92501-3348
Phone (951) 782-4130 - FAX (951) 781-6288
http://www.waterboards.ca.gov/santaana

Alan C. Lloyd, Ph.D.
Agency Secretary

Arnold Schwarzenegger
Governor

TENTATIVE

ORDER NO. R8-2005-0044

WASTE DISCHARGE AND PRODUCER/USER WATER RECYCLING REQUIREMENTS

The following Discharger is authorized to discharge in accordance with the conditions set forth in this Order:

Discharger	**Big Bear Area Regional Wastewater Agency**
Name of Facility	**Regional Treatment Plant, Big Bear City**
Facility Address	**122 Palomino Drive**
	Big Bear City, CA 92314
	San Bernardino

The Discharger is authorized to discharge from the following discharge points as set forth below:

Discharge Point	Effluent Description	Discharge Point Latitude	Discharge Point Longitude	Receiving Water	Disposal Site	Recycling Reuse
001	Secondary effluent without disinfection	34 ° 26' 20" N	116 ° 51' 20" W	Lucerne Hydrologic Unit	Storage Ponds in Lucerne Valley	Irrigation in Lucerne Valley[1]
002	Secondary effluent with disinfection	34 ° 16' 10" N	116 ° 49' 00" W	State surface water: Storage pond in Baldwin Lake; Big Bear Valley groundwater management zone	--	construction and wildlife habitat
003	Tertiary effluent with disinfection	34 ° 16' 10" N	116 ° 49' 00" W	Big Bear Valley groundwater management zone	--	Irrigation

This Order was adopted by the Regional Water Board on:	**June 24, 2005**
This Order shall become effective on:	**June 24, 2005**

[1] The Colorado River Basin Regional Water Quality Control Board (Region 7) has issued waste discharge requirements for the use of the recycled wastewater in the Lucerne Valley.

IT IS HEREBY ORDERED, that Order No. 00-12 is rescinded upon the effective date of this Order except for enforcement purposes, and, in order to meet the provisions contained in Division 7 of the California Water Code (CWC) and regulations adopted thereunder, the Discharger shall comply with the requirements in this Order.

I, Gerard J. Thibeault, Executive Officer, do hereby certify the following is a full, true, and correct copy of an Order adopted by the California Regional Water Quality Control Board, Santa Ana Region, on June 24, 2005.

_____

Gerard J. Thibeault, Executive Officer

CALIFORNIA REGIONAL WATER QUALITY CONTROL BOARD
REGION 8, SANTA ANA REGION

ORDER NO. R8-2005-0044

TABLE OF CONTENTS

I. Facility Information 4
II. Findings 4
III. Discharge Prohibitions 7
IV. Effluent Limitations and Discharge Specifications 8
  A. Effluent limitations – Discharge Points – 001, 002, and 003, beginning June 24, 2005: 8
  B. Reclamation Specifications- Discharge Points 001, 002, and 003 10
V. Receiving Water Limitations 11
  A. Groundwater Limitations 11
VI. Provisions 12
  A. General Provisions: 12
  B. Monitoring and Reporting Program Requirements 13
  C. Special Provisions 13
VII. Compliance Determination 14
  A. Average Monthly Effluent Limitation (AMEL). 14
  B. Average Weekly Effluent Limitation (AWEL). 15
  C. Maximum Daily Effluent Limitation (MDEL). 15
  D. Compliance with the 12-month average limit under Effluent Limitations. 15
  E. Time Interval. 15
  F. For Non-Priority Pollutants. 15

Attachment A – Definitions A-1
Attachment B – Topographic Map B-1
Attachment C – Flow Schematic C-1
Attachment D – Monitoring and Reporting Program (MRP) D-1
Attachment E – Fact Sheet E-1

I. FACILITY INFORMATION

The following Discharger is authorized to discharge in accordance with the conditions set forth in this Order:

Discharger	**Big Bear Area Regional Wastewater Agency**
Name of Facility	**Regional Treatment Plant, Big Bear City**
Facility Address	**122 Palomino Drive**
	Big Bear City, CA 92314
	San Bernardino
Facility Contact, Title, and Phone	**Joseph Hanford, Interim Plant Superintendent (909) 584-4018**
Mailing Address	**P. O. BOX 517, 122 Palomino Drive, Big Bear City, CA 92314**
Type of Facility	**POTW**
Facility Design Flow	**4.89 million gallons per day (mgd)**

II. FINDINGS

The California Regional Water Quality Control Board, Santa Ana Region (hereinafter Regional Water Board), finds:

A. **Background.** Big Bear Area Regional Wastewater Agency (hereinafter Discharger) is currently discharging under Order No. 00-12 and National Pollutant Discharge Elimination System (NPDES) Permit No. CA8000344. The Discharger submitted a Report of Waste Discharge, dated August 26, 2004, and applied for renewal of waste discharge requirements to discharge up to 4.89 mgd of secondary treated and/or up to 1.0 mgd of tertiary treated wastewater from the Regional Treatment Plant, hereinafter Facility. The application was deemed complete on February 14, 2005.

The discharger has eliminated two previous discharge locations into the waters of the U.S. These two discharge locations were Discharge Serial No. 002 (East end of Stanfield Marsh) and 003 (Baldwin Lake Stickleback habitat). The discharger plans to deliver recycled water to a pond in Baldwin Lake to create a wildlife habitat area. Based on the U.S. Army Corps of Engineers' determination, the pond within the Baldwin Lake area is not considered waters of the U.S. Therefore, this Order is issued as Waste Discharge and Producer/User Water Recycling Requirements; an NPDES permit is no longer necessary.

B. **Facility Description.** The Discharger owns and operates a POTW. The treatment system consists of: preliminary treatment, secondary treatment, tertiary treatment, disinfection system, and sludge treatment system. Most of the treated wastewater is discharged through Discharge Point 001 (see table on cover page) into storage ponds in the Lucerne Valley for use in irrigation of fodder, fiber and seed crops. A minimal volume of treated wastewater is discharged through Discharge Points 002 and 003 for recycling and reuse at various sites for irrigation, dust control at construction sites, and wildlife habitat restoration in the Baldwin Lake. Attachment B provides a topographic map of the area around the facility. Attachment C provides a flow schematic of the facility.

Stormwater runoff from the three discharge points of the RTP discharges into a flood zone, which is located at the east side of the plant. In heavy storm seasons, there is the possibility of overflow from the flooding zone into offsite surface waters.

C. **Legal Authorities.** This Order is issued pursuant to Chapter 5.5, Division 7 of the California Water Code (CWC). This Order serves as Waste Discharge Requirements (WDRs) pursuant to Article 4, Chapter 4 of the CWC.

This Order also includes requirements based on Title 22, Division 4, Chapter 3, of California Code of Regulations, which specifies regulations for the use of recycled water for irrigation and construction purposes.

D. **Background and Rationale for Requirements.** The Regional Water Board developed the requirements in this Order based on information submitted as part of the application and through monitoring and reporting programs. Attachments A through F, which contain background information and rationale for Order requirements, are hereby incorporated into this Order and, thus, constitute part of the Findings for this Order.

E. **California Environmental Quality Act (CEQA).** The project involves the update of waste discharge requirements for an existing facility and, as such, is exempt from the California Environmental Quality Act (Public Resources Code, Section 21100 et. seq.) in accordance with Section 15301, Chapter 3, Title 14, California Code of Regulations.

F. **Water Quality Control Plans.** The Regional Water Board adopted a revised Water Quality Control Plan for the Santa Ana Region (hereinafter Basin Plan) that became effective on January 24, 1995. The Basin Plan designates beneficial uses, establishes water quality objectives, and contains implementation programs and policies to achieve those objectives for all waters in the Santa Ana Region addressed through the plan. More recently, the Basin Plan was amended significantly to incorporate revised boundaries for groundwater subbasins, now termed "management zones", new nitrate-nitrogen and TDS objectives for the new management zones, and new nitrogen and TDS management strategies applicable to both surface and ground waters. This Basin Plan Amendment was adopted by the Regional Board on January 22, 2004. The State Water Resources Control Board and Office of Administrative Law (OAL) approved the Amendment on September 30, 2004 and December 23, 2004, respectively.

These Basin Plan changes did not affect groundwater in the Big Bear area, apart from the re-designation of the Big Bear Valley groundwater subbasin as a groundwater management zone. Beneficial uses applicable to the Big Bear Valley Groundwater Management Zone and Lucerne Hydrologic Unit are as follows:

Discharge Point	Receiving Water Name	Beneficial Use(s)
001	Lucerne Hydrologic Unit	Based on Region 7's Basin Plan. 1. Municipal supply 2. Industrial supply 3. Agricultural supply
002	A pond in Baldwin Lake; and Big Bear Valley groundwater management zone	<u>Beneficial Uses for Baldwin Lake:</u> <u>Intermittent:</u> 1. Water contact recreation (REC-1), 2. Non-contact water recreation (REC-2), 3. Warm freshwater habitat (WARM), 4. Cold freshwater habitat (COLD), 5. Preservation of biological habitats of special significance (BIOL), 6. Wildlife habitat (WILD), and 7. Rare, threatened or endangered species (RARE). <u>Beneficial Uses for groundwater management zone:</u> <u>Present or Potential:</u> Municipal and domestic supply, industrial service supply.
003	Big Bear Valley groundwater management zone	<u>Beneficial Uses for ground water management zone:</u> <u>Present or potential:</u> Municipal and domestic supply, industrial service supply.

Requirements of this Order specifically implement the applicable Water Quality Control Plans.

G. **Industrial Stormwater Requirements.** Pursuant to Section 402(p) of the Clean Water Act and Title 40 of the Code of Federal Regulations (CFR) Part 122, 123, and 124, the State Water Resources Control Board adopted general NPDES permits to regulate storm water discharges associated with industrial activities (State Board Order No. 97-03-DWQ) adopted on April 17, 1997. The discharger's stormwater program was regulated previously under Order No. 00-12. For this Order, storm water discharge from the RTP is subject to requirements under the general permit. The discharger shall submit notice of intent to be covered under this general permit and develop and implement Storm Water Pollution Prevention Plans to comply with the general NPDES permit.

H. **Antidegradation Policy.** The State Water Board established California's antidegradation policy in State Water Board Resolution No. 68-16. Resolution No. 68-16 requires that existing quality of waters be maintained unless degradation is justified based on specific findings. As discussed in the Fact Sheet (Attachment E), the permitted discharge is consistent with the antidegradation provisions of State Water Board Resolution No. 68-16.

I. **Monitoring and Reporting.** Sections 13267 and 13383 of the CWC authorize the Regional Water Boards to require technical and monitoring reports. The Monitoring and Reporting Program establishes monitoring and reporting requirements to implement State requirements. This Monitoring and Reporting Program is provided in Attachment D.

J. **Biosolids Requirements.** On February 19, 1993, the USEPA issued a final rule for the use and disposal of sewage sludge, 40 CFR, Part 503. This rule requires that producers of sewage sludge meet certain reporting, handling, and disposal requirements. The State of California has not been delegated the authority to implement this program, therefore, the U.S. Environmental Protection Agency is the implementing agency. However, this Order includes Regional Board biosolids requirements.

K. **Notification of Interested Parties.** The Regional Water Board has notified the Discharger and interested agencies and persons of its intent to prescribe Waste Discharge Requirements for the discharge and has provided them with an opportunity to submit their written comments and recommendations. Details of notification are provided in the Fact Sheet (Attachment E) of this Order.

L. **Consideration of Public Comment.** The Regional Water Board, in a public meeting, heard and considered all comments pertaining to the discharge. Details of the Public Hearing are provided in the Fact Sheet (Attachment E) of this Order.

III. DISCHARGE PROHIBITIONS

A. Wastes discharged from each of the following Discharge Points shall be limited to the type of effluent shown in the following table:

Discharge Point	Type of Effluent
001	Secondary effluent without disinfection[a]
002	Secondary effluent with disinfection[b]
003	Tertiary effluent with disinfection

a. Secondary or tertiary effluent with disinfection may also be discharged at this location.
b. Tertiary effluent with disinfection may also be discharged at this location.

B. Discharge of wastewater at a location or in a manner different from that described in A. above is prohibited.
C. The bypass or overflow of untreated wastewater or wastes to surface waters or surface water drainage courses is prohibited
D. The discharge of any substances in concentrations toxic to animal or plant life in the affected receiving water is prohibited.
E. There shall be no visible oil and grease in the discharge.
F. The discharge of any radiological, chemical, or biological warfare agent or high level radiological waste is prohibited.

IV. EFFLUENT LIMITATIONS AND DISCHARGE SPECIFICATIONS

A. Effluent limitations – Discharge Points – 001, 002, and 003, beginning June 24, 2005:

1. The discharge of wastewater to Lucerne Valley and recycled water reuse for irrigation, construction, and wildlife habitat shall maintain compliance with the following limitations at Discharge Points 001, 002, and 003, with compliance measured at each individual monitoring location as described in the attached Monitoring and Reporting Program (Attachment D). The wastewater shall at all times be oxidized.

FOR DISCHARGE POINTS NO. 001 AND 002			
Parameter	**Units**	**Discharge Limitations**	
		Average Monthly	**Average Weekly**
Biochemical Oxygen Demand 5-day @ 20°C	mg/L	30	45
	lbs/day[1]	1,223	1,835
Total Suspended Solids	mg/L	30	45
	lbs/day[1]	1,223	1,835

FOR DISCHARGE POINT NO. 003			
Parameter	**Units**	**Discharge Limitations**	
		Average Monthly	**Average Weekly**
Biochemical Oxygen Demand 5-day @ 20°C	mg/L	20	30
	lbs/day[2]	167	250
Total Suspended Solids	mg/L	20	30
	lbs/day[2]	167	250

2. The pH of the effluent, measured at each monitoring point, shall at all times be within the range of 6 and 9 pH units.

[1] Based on a design capacity of 4.89 mgd for secondary treatment.
[2] Based on a design capacity of 1.0 mgd for tertiary treatment.

3. Percent Removal: The monthly average biochemical oxygen demand and suspended solids concentrations of the discharge shall not be greater than fifteen percent (15%) of the monthly average influent concentrations.

4. TDS Limitations for Discharge Points 002 and 003: for effluent limitations a. and b., below, the lower of the two total dissolved solids limits is the limit.

   a. The 12-month average[3] total dissolved solids concentration shall not exceed 550 mg/l and the 12-month flow weighted average shall not exceed 22,430 lbs/day[4], and
   b. The 12-month average total dissolved solids concentration shall not exceed the 12-month average total dissolved solids concentration in the water supply by more than 250 mg/l.

5. Total Inorganic Nitrogen (TIN) Limitations: The 12-month flow-weighted average TIN concentration shall not exceed 10 mg/l.

6. For Discharge from Discharge Point 003: Tertiary treated recycled water shall at all times be a filtered and subsequently disinfected wastewater that meets the following criteria:

   a. The turbidity of the filtered wastewater does not exceed any of the following:

      i. 0.2 NTU more than 5 percent of the time within a 24-hour period; and
      ii. 0.5 NTU at any time.

   b. Disinfected tertiary wastewater shall meet the following criteria:

      i. The median concentration of total coliform bacteria measured in the disinfected effluent shall not exceed a most probable number (MPN) of 2.2 per 100 milliliters utilizing the bacteriological results of the last seven days for which analyses have been completed.
      ii. The number of total coliform bacteria shall not exceed an MPN of 23 per 100 milliliters in more than one sample in any 30-day period.
      iii. No sample shall exceed an MPN of 240 total coliform bacteria per 100 milliliters.

7. For Discharge Point 002: wastewater shall at all times be an oxidized and subsequently disinfected wastewater that meets the following criteria:

   a. The median concentration of total coliform bacteria in the disinfected effluent shall not exceed an MPN of 23 per 100 milliliters utilizing the bacteriological results of the last seven days for which analyses have been completed[5].

   b. The number of total coliform bacteria shall not exceed an MPN of 240 per 100 milliliters in more than one sample in any 30-day period.

---

3 See Section VII. D Compliance Determination.
4 Calculated from 4.89 mgd x 8.34 x 550 mg/l.
5 Title 22, 60301.225.

B. Reclamation Specifications- Discharge Points 002 and 003

1. The use of recycled water shall only commence after final approval for such use is granted by the California Department of Health Services (CDHS). The Discharger shall provide the Regional Board with a copy of the CDHS approval letter within 30 days of the approval notice.

2. The Discharger shall be responsible for assuring that recycled water is delivered and utilized in conformance with this Order, the recycling criteria contained in Title 22, Division 4, Chapter 3, Sections 60301 through 60355, California Code of Regulations, and the "Guidelines for Use of Reclaimed Water" by the California Department of Health Services. The discharger shall conduct periodic inspections of the facilities of the recycled water users to monitor compliance by the users with this Order.

3. The Discharger shall establish and enforce Rules and Regulations for Recycled Water users, governing the design and construction of recycled water use facilities and the use of recycled water in accordance with the uniform statewide recycling criteria established pursuant to the California Water Code Section 13521.

    a. Use of recycled water by the discharger shall be consistent with its Rules and Regulations for Recycled Water Use.

    b. Any revisions made to the Rules and Regulations shall be subject to the review of the Regional Board, the California Department of Health Services, and the County of San Bernardino Department of Environmental Health. The revised Rules and Regulations or a letter certifying that the discharger's Rules and Regulations contain the updated provisions in this Order, shall be submitted to the Regional Board within 60 days of adoption of this Order by the Regional Board.

4. The Discharger shall, within 60 days of the adoption of this Order, review and update as necessary its program to conduct compliance inspections of recycled water reuse sites. Inspections shall determine the status of compliance with the discharger's Rules and Regulations for Recycled Water Use.

5. The storage, delivery, or use of recycled water shall not individually or collectively, directly or indirectly, result in a pollution or nuisance, or adversely affect water quality, as defined in the California Water Code

6. Prior to delivering recycled water to any new user, the discharger shall obtain the following information from each new user. The discharger shall submit to the Regional Board, the California Department of Health Services and the San Bernardino County Health Department a report containing the following information for review and approval:

    a. The average number of persons estimated to be served at each use site area on a daily basis.

b. The specific boundaries of the proposed use site area including a map showing the location of each facility, drinking water fountain, and impoundment to be used.
c. The person or persons responsible for operation of the recycled water system at each use area.
d. The specific use to be made of the recycled water at each use area.
e. The methods to be used to assure that the installation and operation of the recycled system will not result in cross connections between the recycled water and potable water piping systems. This shall include a description of the pressure, dye or other test methods to be used to test the system.
f. Plans and specifications which include following:
   i. Proposed piping system to be used.
   ii. Pipe locations of both the recycled and potable systems.
   iii. Type and location of the outlets and plumbing fixtures that will be accessible to the public.
   iv. The methods and devices to be used to prevent backflow of recycled water into the potable water system.
   v. Plan notes relating to specific installation and use requirements.

7. The user shall designate an on-site supervisor responsible for the operation of the recycled water distribution system. The supervisor shall be responsible for enforcing this Order, prevention of potential hazards, the installation, operation and maintenance of the distribution system, maintenance of the distribution and irrigation system plans in "as-built" form, and for the distribution of the recycled wastewater in accordance with this Order.

V. RECEIVING WATER LIMITATIONS

A. Groundwater Limitations

1. The discharge shall not cause the underlying groundwater to be degraded, to exceed water quality objectives, unreasonably affect beneficial uses, or cause a condition of pollution or nuisance.

2. The discharge, in combination with other sources, shall not cause underlying groundwater to contain waste constituents in concentrations greater than background water quality.

VI. PROVISIONS

A. General Provisions:

1. Neither the treatment nor the discharge of waste shall create, or threaten to create, a nuisance or pollution as defined by Section 13050 of the California Water Code.

2. The discharger shall maintain a copy of this Order at the site so that it is available to site operating personnel at all times. Key operating personnel shall be familiar with its content.

3. The discharger shall take all reasonable steps to minimize any adverse impact to receiving waters resulting from noncompliance with any requirements specified in this Order, including such accelerated or additional monitoring as necessary to determine the nature and impact of the noncomplying discharge.

4. The discharger shall optimize chemical additions needed in the treatment process to meet waste discharge requirements so as to minimize total dissolved solid increases in the recycled water.

5. The provisions of this Order are severable, and if any provision of this Order, or the application of any provisions of this Order to any circumstance, is held invalid, the application of such provision to other circumstances, and the remainder of this Order shall not be affected thereby.

6. Collected screenings, sludge, and other solids removed from liquid wastes shall be disposed of in a manner approved by the Regional Board's Executive Officer.

7. If the discharger demonstrates a correlation between the biological oxygen demand (BOD5) and total organic carbon (TOC) concentrations in the effluent to the satisfaction of the Executive Officer, compliance with the BOD5 limits contained in this Order may be determined based on analyses of the TOC of the effluent.

8. In the event of any change in control or ownership of land or waste discharge facility presently owned or controlled by the discharger, the discharger shall notify the succeeding owner or operator of the existence of this Order by letter, a copy of which shall be forwarded to the Regional Board.

9. The treatment facilities shall be designed, constructed, operated, and maintained to prevent inundation or washout due to floods with a 100-year return frequency.

B. Monitoring and Reporting Program Requirements

The Discharger shall comply with the Monitoring and Reporting Program, and future revisions thereto, in Attachment D of this Order. This monitoring and reporting program may be modified by the Executive Officer at any time during the term of this Order, and may include an increase or a reduction in the number of parameters to be monitored, the frequency of the monitoring or the number and size of samples to be collected. Any increase in the number of parameters to be monitored, the frequency of the monitoring or the number and size of samples to be collected may be reduced back to the levels specified in the original monitoring and reporting program at the discretion of the Executive Officer.

C. Special Provisions

1. Construction, Operation and Maintenance Specifications

   a. The discharger's wastewater treatment plant shall be supervised and operated by persons possessing certificates of appropriate grade pursuant to Title 23, Division 3, Chapter 14, California Code of Regulations.

   b. The discharger shall provide safeguards to assure that should there be reduction, loss, or failure of electric power, the discharger will comply with the requirements of this Order.

   c. The discharger shall update as necessary, the "Operation and Maintenance Manual (O&M Manual)" which it has developed for the treatment facility to conform to latest plant changes and requirements. The O&M Manual shall be readily available to operating personnel onsite. The O&M Manual shall include the following:

      i. Description of the treatment plant table of organization showing the number of employees, duties and qualifications and plant attendance schedules (daily, weekends and holidays, part-time, etc). The description should include documentation that the personnel are knowledgeable and qualified to operate the treatment facility so as to achieve the required level of treatment at all times.

      ii. Detailed description of safe and effective operation and maintenance of treatment processes, process control instrumentation and equipment.

      iii. Description of laboratory and quality assurance procedures.

      iv. Process and equipment inspection and maintenance schedules.

      v. Description of safeguards to assure that, should there be reduction, loss, or failure of electric power, the discharger will be able to comply with requirements of this Order.

vi. Description of preventive (fail-safe) and contingency (response and cleanup) plans for controlling accidental discharges, and for minimizing the effect of such events. These plans shall identify the possible sources (such as loading and storage areas, power outage, waste treatment unit failure, process equipment failure, tank and piping failure) of accidental discharges, untreated or partially treated waste bypass, and polluted drainage.

2. Special Provisions for Municipal Facilities (POTWs Only)

a. Sludge Disposal Requirements

i. Collected screenings, biosolids, and other solids removed from liquid wastes shall be disposed of in a manner that is consistent with Chapter 15, Division 3, Title 23, of the California Code of Regulations and approved by the Executive Officer.

ii. The use and disposal of biosolids shall comply with existing Federal and State laws and regulations, including permitting requirements and technical standards included in 40 CFR 503.

iii. Any proposed change in biosolids use or disposal practice from a previously approved practice shall be reported to the Executive Officer and EPA Regional Administrator at least 90 days in advance of the change.

iv. The discharger shall take all reasonable steps to minimize or prevent any discharge or biosolids use or disposal that has the potential of adversely affecting human health or the environment.

VII. COMPLIANCE DETERMINATION

Compliance with the effluent limitations contained in Section IV of this Order will be determined as specified below:

A. Average Monthly Effluent Limitation (AMEL).
If the average of daily discharges over a calendar month exceeds the AMEL for a given parameter, an alleged violation will be flagged and the Discharger will be considered out of compliance for each day of that month for that parameter (e.g., resulting in 31 days of non-compliance in a 31-day month). The average of daily discharges over the calendar month that exceeds the AMEL for a parameter will be considered out of compliance for that month only. If only a single sample is taken during the calendar month and the analytical result for that sample exceeds the AMEL, the Discharger will be considered out of compliance for that calendar month. For any one calendar month during which no sample (daily discharge) is taken, no compliance determination can be made for that calendar month.

B. Average Weekly Effluent Limitation (AWEL).

If the average of daily discharges over a calendar week exceeds the AWEL for a given parameter, an alleged violation will be flagged and the Discharger will be considered out of compliance for each day of that week for that parameter, resulting in 7 days of non-compliance. The average of daily discharges over the calendar week that exceeds the AWEL for a parameter will be considered out of compliance for that week only.

If only a single sample is taken during the calendar week and the analytical result for that sample exceeds the AWEL, the Discharger will be considered out of compliance for that calendar week. For any one calendar week during which no sample (daily discharge) is taken, no compliance determination can be made for that calendar week.

C. Maximum Daily Effluent Limitation (MDEL).

If a daily discharge exceeds the MDEL for a given parameter, an alleged violation will be flagged and the Discharger will be considered out of compliance for that parameter for that 1 day only within the reporting period. For any 1 day during which no sample is taken, no compliance determination can be made for that day.

D. Compliance with the 12-month flow weighted average limit under Effluent Limitations.

A. 4. shall be determined by the arithmetic mean of the last twelve monthly averages.

E. Time Interval.

Compliance determinations shall be based on available analyses for the time interval associated with the effluent limitation. Where only one sample analysis is available in a specified time interval (e.g., monthly or weekly average), that sample shall serve to characterize the discharge for the entire interval. If quarterly sample results show noncompliance with the average monthly limit and that sample result is used for compliance determinations for each month of the quarter, then three separate violations of the average monthly limit shall be deemed to have occurred.

F. For Non-Priority Pollutants.

The discharge shall be considered to be in compliance with an effluent limitation, which is less than or equal to the PQL specified in Attachment D of M&RP No. R8-2005-44 if the arithmetic mean of all test results for the monitoring period is less than the constituent effluent limitation. Analytical results that are less than the specified PQL shall be assigned a value of zero.

ATTACHMENT A – DEFINITIONS

Average Monthly Effluent Limitation (AMEL): the highest allowable average of daily discharges over a calendar month, calculated as the sum of all daily discharges measured during a calendar month divided by the number of daily discharges measured during that month.

Average Weekly Effluent Limitation (AWEL): the highest allowable average of daily discharges over a calendar week (Sunday through Saturday), calculated as the sum of all daily discharges measured during a calendar week divided by the number of daily discharges measured during that week.

Daily Discharge: Daily Discharge is defined as either: (1) the total mass of the constituent discharged over the calendar day (12:00 am through 11:59 pm) or any 24-hour period that reasonably represents a calendar day for purposes of sampling (as specified in the Order), for a constituent with limitations expressed in units of mass or; (2) the unweighted arithmetic mean measurement of the constituent over the day for a constituent with limitations expressed in other units of measurement (e.g., concentration).

The daily discharge may be determined by the analytical results of a composite sample taken over the course of one day (a calendar day or other 24-hour period defined as a day) or by the arithmetic mean of analytical results from one or more grab samples taken over the course of the day.

For composite sampling, if 1 day is defined as a 24-hour period other than a calendar day, the analytical result for the 24-hour period will be considered as the result for the calendar day in which the 24-hour period ends.

Maximum Daily Effluent Limitation (MDEL): the highest allowable daily discharge of a pollutant.

ATTACHMENT B – TOPOGRAPHIC MAP

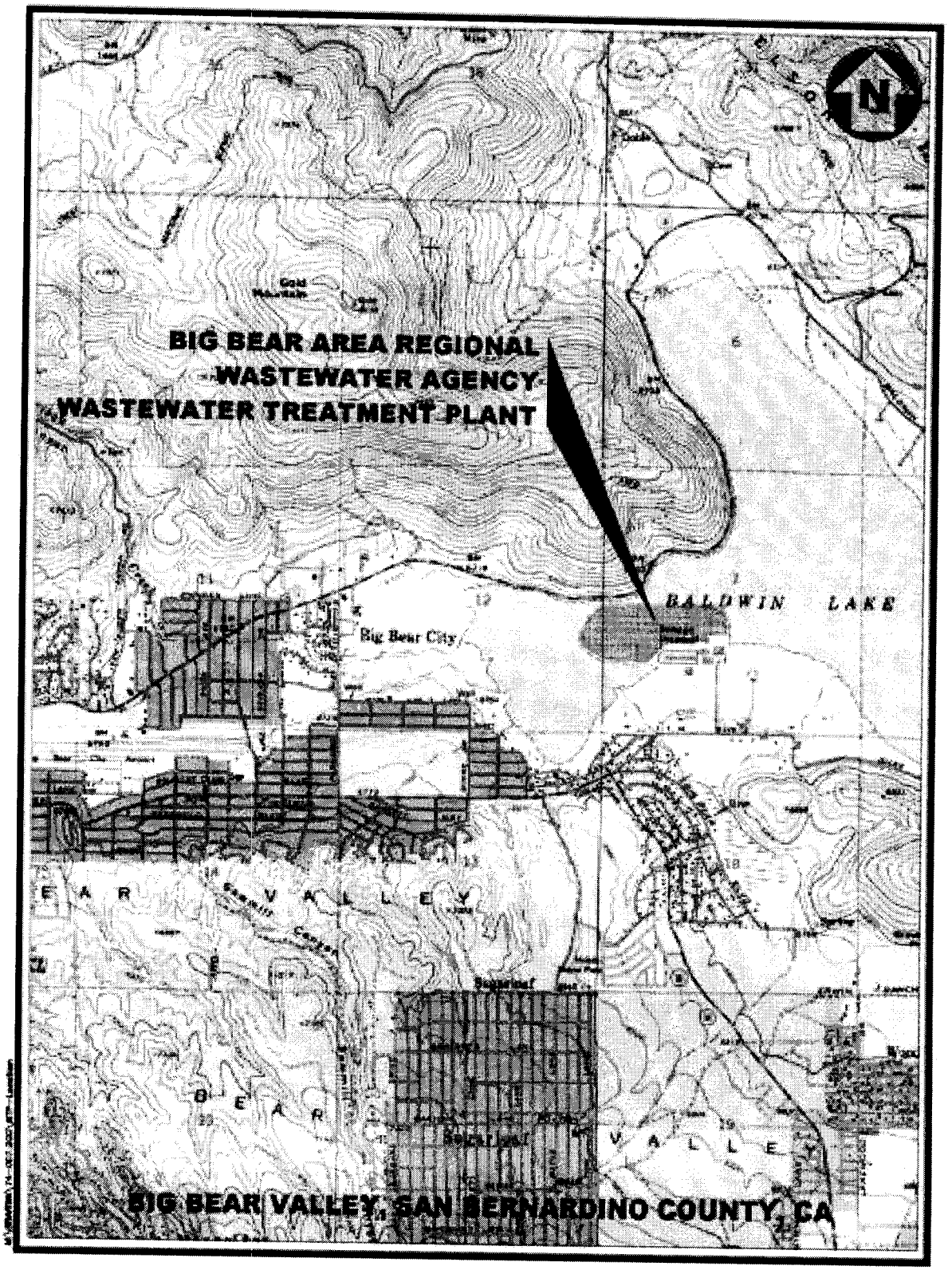

ATTACHMENT C – FLOW SCHEMATIC

FACILITY DESIGNATION

- (2) HEADWORKS BUILDING
- (7) SLUDGE BUILDING
- (9) OXIDATION DITCH/NUTRIENT REMOVAL SYSTEM
- (12) CLARIFIER
- (14) BALANCING CHAMBERS/RECYCLED WATER STORAGE TANKS
- (16) HORSESHOE STORAGE POND
- (17) MAIN EFFLUENT PUMP, WAS AND RAS PUMP STATION
- (18) AUXILIARY EFFLUENT PUMP STATION
- (19) SLUDGE DEWATERING BEDS
- (20) WILDLIFE HABITAT AREA
- (21) EMERGENCY HOLDING POND
- (22) PAVED SLUDGE DRYING AREA
- (23) FILTERS/UV OR CHLORINATION FACILITY
- (26) SAMPLING/MONITORING LOCATION M001 -- BOD/TSS
- (27) SAMPLING/MONITORING LOCATION M002 -- COLIFORM
- (28) SAMPLING/MONITORING LOCATION M003 -- COLIFORM/TURBIDITY
- (30) DISCHARGE POINT 003
- (32) DISCHARGE POINT 001
- (33) SAMPLING/MONITORING LOCATION M-INF

TREATMENT PROCESS FLOW SCHEMATIC

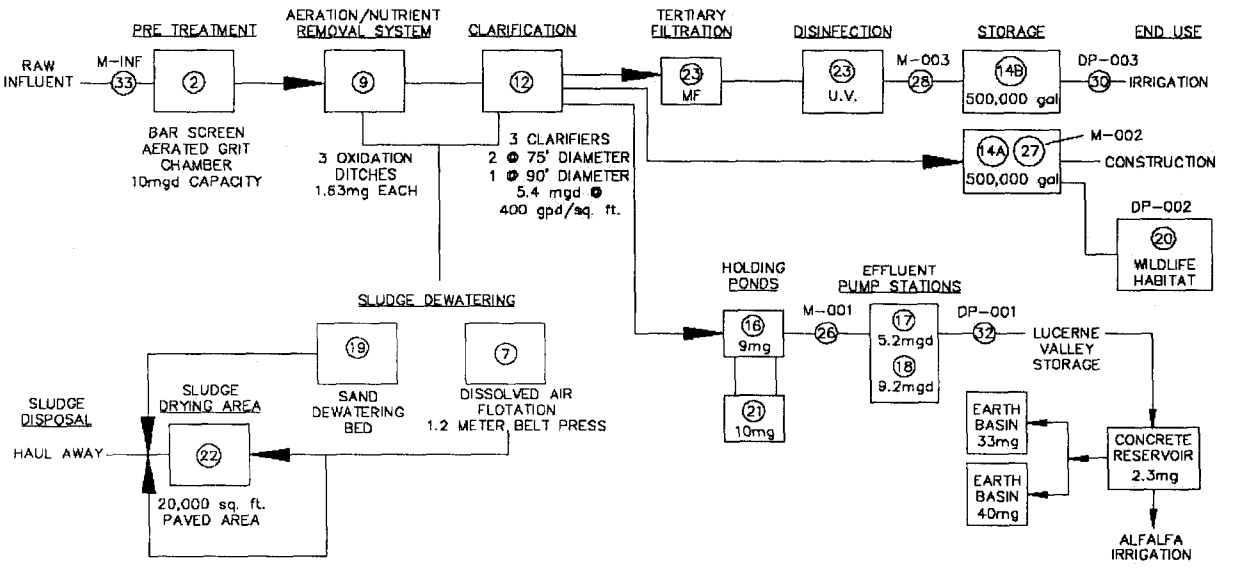

BIG BEAR AREA REGIONAL WASTEWATER AGENCY

PROCESS FLOW DIAGRAM

Attachment D – Monitoring and Reporting Program – Table of Contents

Attachment D– Monitoring and Reporting Program (MRP) 2
I. General Monitoring Provisions 2
II. Monitoring Locations 3
III. Influent Monitoring Requirements 3
Monitoring Location M-INF 3
IV. Effluent Monitoring Requirements 3
Monitoring Locations at M-001, M-002, and M-003 3
V. Reclamation Monitoring Requirements 5
VI. Other Monitoring Requirements 5
VII. Reporting Requirements 5
A. Reporting Requirements 5
B. Self Monitoring Reports (SMRs) 7
VIII. PQL and EPA PPL 9

ATTACHMENT D– MONITORING AND REPORTING PROGRAM (MRP)

CWC sections 13267 and 13383 authorize the Regional Water Quality Control Board (RWQCB) to require technical and monitoring reports. This MRP establishes monitoring and reporting requirements, that implement California regulations.

I. GENERAL MONITORING PROVISIONS

A. All sampling and sample preservation shall be in accordance with the current edition of "Standard Methods for the Examination of Water and Wastewater" (American Public Health Association).

B. Chemical, bacteriological, and bioassay analyses shall be conducted at a laboratory certified for such analyses by the State Department of Health Services or at laboratories approved by the Regional Board's Executive Officer.

C. The discharger shall have and implement an acceptable written quality assurance (QA) plan for laboratory analyses. Duplicate chemical analyses must be conducted on a minimum of ten percent (10%) of the samples, or at least one sample per month, whichever is greater. A similar frequency shall be maintained for analyzing spiked samples.

D. The flow measurement system shall be calibrated at least once per year or more frequently, to ensure continued accuracy.

E. All monitoring instruments and devices used by the discharger to fulfill the prescribed monitoring program shall be properly maintained and calibrated as necessary to ensure their continued accuracy. In the event that continuous monitoring equipment is out of service for greater than a 24-hour period, the discharger shall obtain a representative grab sample each day the equipment is out of service. The discharger shall correct the cause(s) of failure of the continuous monitoring equipment as soon as practicable. In its monitoring report, the discharger shall specify the period(s) during which the equipment was out of service and if the problem has not been corrected, shall identify the steps which the discharger is taking or proposes to take to bring the equipment back into service and the schedule for these actions.

F. Monitoring and reporting shall be in accordance with the following:

1. Samples and measurements taken for the purpose of monitoring shall be representative of the monitored activity.
2. The monitoring and reporting of influent, effluent, and sludge shall be done more frequently as necessary to maintain compliance with this Order and or as specified in this Order.
3. Whenever the discharger monitors any pollutant more frequently than is required by this Order, the results of this monitoring shall be included in the calculation and reporting of the data submitted in the discharge monitoring report specified by the Executive Officer.
4. A "grab" sample is defined as any individual sample collected in less than 15 minutes.
5. A composite sample is defined as a combination of no fewer than eight individual grab samples obtained over the specified sampling period. The volume of each individual grab sample shall be proportional to the discharge flow rate at the time of sampling. The

compositing period shall equal the specific sampling period, or 24 hours, if no period is specified.

6. 24-hour composite samples shall be collected continuously during a 24-hour operation of the facility.
7. Daily samples shall be collected on each day of the week.
8. Monthly samples shall be collected on any representative day of each month.
9. Quarterly samples shall be collected by any representative day of March, June, September, and December.
10. Annual priority pollutant samples shall be collected in December.

II. MONITORING LOCATIONS

The Discharger shall establish the following monitoring locations to demonstrate compliance with the effluent limitations, discharge specifications, and other requirements in this Order:

Discharge Point Name	Monitoring Location Name	Monitoring Location Description
--	M-INF #33	Influent line before Barscreen
001	M-001 #26	Junction Manhole after Holding Ponds
002	M-002 #27	South Balancing Chamber, Pond 14A
003	M-003 #28	Effluent line before pond 14B
--	S-001	Water Supply

III. INFLUENT MONITORING REQUIREMENTS

Monitoring Location M-INF

The Discharger shall monitor the **influent to the facility** at **Monitoring Location M-INF** as follows:

Parameter	Units	Sample Type	Minimum Sampling Frequency
Flow	MGD	Recorder	Continuous
Biochemical Oxygen Demand$_5$	mg/l	24-Hour Composite	Monthly
Suspended Solids	mg/l	24-Hour Composite	Monthly

IV. EFFLUENT MONITORING REQUIREMENTS

Monitoring Locations at M-001, M-002, and M-003

The Discharger shall monitor the effluent at the Monitoring Locations listed above for the following constituents:

Parameter	**Units**	**Sample type**	**Minimum Sampling Frequency**	**Sample Location**
Flow[1]	MGD	Recorder/totalizer	Continuous	-----
Turbidity[2]	NTU	Recorder	Continuous	M-003
pH	pH unit	Recorder	Continuous	M-001
pH[3]	pH unit	Grab	Daily	M-002 or M-003
Specific Conductivity	µmhos	Grab	Daily	M-001; M-002[3]; M-003[3]
Total Coliform Organisms[3]	MPN per 100m/l	Grab	Daily	M-002 M-003
Biochemical Oxygen Demand$_5$	mg/l	24-Hour composite	Weekly	M-001[4] M-003[5]
Total Suspended Solids	mg/l	24-Hour composite	Weekly	M-001[4] M-003[5]
Total Inorganic Nitrogen	mg/l	24-Hour composite	Monthly	M-001
Total Dissolved Solids[3]	mg/l	24-Hour composite	Monthly	M-002; M-003
Hardness	mg/l	24-Hour composite	Quarterly	M-001
Sodium	mg/l	24-Hour composite	Quarterly	M-001
Chloride	mg/l	24-Hour composite	Quarterly	M-001
Sulfate	mg/l	24-Hour composite	Quarterly	M-001
Total Phosphorous	mg/l	24-Hour composite	Monthly	M-001
EPA Priority Pollutants Metals *(items #1-#13)* see attachment D-10	µg/l		Annually	M-001
Remaining EPA Priority Pollutants *(Volatile Organics items #17-#55)*-see attachment D-10	µg/l	Grab	Annually	M-001

1 The daily flow to each discharge point shall be recorded.
2 Whenever recycled water is discharged or used at Discharge Serial No. 003.
3 Whenever recycled water is discharged or used at Discharge Serial No. 002 *or* 003.
4 The weekly 24-Hour composite sample for BOD$_5$ and TSS taken from sample location M-001 shall be representative of Serial Discharge No. 001 and 002.
5 The weekly 24-Hour composite sample for BOD$_5$ and TSS taken from sample location M-003 whenever recycled water is discharged or used at Serial Discharge No. 003.

V. RECLAMATION MONITORING REQUIREMENTS

Whenever recycled water is supplied to a user, the volume and type of recycled water, the user of recycled water, the locations of those sites including the names of the groundwater management zone underlying the recycled water use sites, type of use (e.g. irrigation, industrial, etc) and the dates at which water is supplied shall be recorded. A summary report of water use by groundwater management zones shall be submitted quarterly. This report shall be included in the annual report.

VI. OTHER MONITORING REQUIREMENTS

A. WATER SUPPLY MONITORING

1. Once every three years, a sample of each source of the water supplied to the sewered area shall be obtained and analyzed for the following constituents:

Specific Conductance	Total Dissolved Solids	pH
Sodium	Total Hardness	
Chloride	Nitrate	

2. All of the above constituents shall be expressed in "mg/l" except specific conductance and pH, which shall be expressed in "micromhos/cm" and "pH units," respectively.

3. Monthly reports shall be submitted stating the amount (in percentage or acre-feet) supplied to the sewered area from each source of water and the resulting flow-weighted water supply quality for total dissolved solids, chloride, nitrate, sodium, and total hardness.

B. BIOSOLIDS MONITORING

The discharger shall maintain a permanent log of solids hauled away from the treatment facilities for use/disposal elsewhere, including the date hauled, the volume or weight (in dry tons), type (screening, grit), and destination. This information shall be reported annually.

VII. REPORTING REQUIREMENTS

A. Reporting Requirements

1. All analytical data shall be reported with method detection limit[1] (MDLs) and with identification of either practical quantitation levels (PQLs[2]) or limits of quantitation (LOQs).

---

[1] The standardized test procedure to be used to determine the method detection limit (MDL) is given at Appendix B, 'Definition and Procedure for the Determination of the Method Detection Limit' of 40 CFR 136.

[2] PQL is the lowest concentration of a substance which can be determined within ± 20 percent of the true concentration by 75 percent of the analytical laboratories tested in a performance evaluation study. Alternatively, if performance data are not available, the PQL is the method detection limit (MDL) x 5 for carcinogens and MDL x 10 for noncarcinogens.

2. Laboratory data for effluent samples must quantify each constituent down to the PQLs specified in Attachment "D-9 " or to lower PQLs achieved by the discharger. Any internal quality control data associated with the sample must be reported when requested by the Executive Officer. The Regional Board will reject the quantified laboratory data if quality control data is unavailable or unacceptable.

3. Discharge monitoring data shall be submitted in a format acceptable by the Regional Board. Specific reporting format may include preprinted forms and/or electronic media. The results of all monitoring required by this Order shall be reported to the Regional Board, and shall be submitted in such a format as to allow direct comparison with the limitations and requirements of this order.

4. The discharger shall tabulate the monitoring data to clearly illustrate compliance and/or noncompliance with the requirements of the Order.

5. For every item of monitoring data where the requirements are not met, the monitoring report shall include a statement discussing the reasons for noncompliance, and of the actions undertaken or proposed which will bring the discharge into full compliance with requirements at the earliest time, and an estimate of the date when the discharger will be in compliance. The discharger shall notify the Regional Board by letter when compliance with the time schedule has been achieved.

6. The reports for December shall include a roster of plant personnel, including job titles, duties, and level of State certification for each individual.

7. By March 1 of each year, the discharger shall submit an annual report to the Regional Board. The report shall contain both tabular and graphical summaries of the monitoring data obtained during the previous year. In addition, the discharger shall discuss the compliance record and the corrective actions taken or planned that may be needed to bring the discharge into full compliance with the waste discharge requirements. The annual report shall include a summary of the quality assurance (QA) activities for the previous year.

8. The discharger shall assure that records of all monitoring information are maintained and accessible for a period of at least five years from the date of the sample, report, or application. This period of retention shall be extended during the course of any unresolved litigation regarding this discharge or by the request of the Regional Board at any time. Records of monitoring information shall include:

    a. The date, exact place, and time of sampling or measurements;

    b. The individual(s) who performed the sampling, and/or measurements;

    c. The laboratory which performed the analyses;

    d. The date(s) analyses were performed;

    e. The individual(s) who performed the analyses;

    f. The analytical techniques or methods used, including any modification to those methods;

    g. All sampling and analytical results, including

i. units of measurement used;
ii. minimum reporting limit for the analysis (minimum level, practical quantitation level (PQL));
iii. results less than the reporting limit but above the method detection limit (MDL);
iv. data qualifiers and a description of the qualifiers;
v. quality control test results (and a written copy of the laboratory quality assurance plan);
vi. dilution factors, if used; and
vii. sample matrix type.

h. All monitoring equipment calibration and maintenance records;

i. All original strip charts from continuous monitoring devices;

j. All data used to complete the application for this Order; and,

k. Copies of all reports required by this Order.

l. Electronic data and information generated by the Supervisory Control And Data Acquisition (SCADA) System.

9. All reports and/or information submitted to the Regional Board shall be signed by a responsible officer or duly authorized representative of the discharger and shall be submitted under penalty of perjury.

10. The discharger, unless otherwise specified elsewhere in this M&RP, shall deliver a copy of each monitoring report in the appropriate format to:

California Regional Water Quality Control Board
Santa Ana Region
3737 Main Street, Suite 500
Riverside, CA 92501-3348

B. Self Monitoring Reports (SMRs)

1. At any time during the term of this Order, the State or Regional Water Board may notify the Discharger to electronically submit self-monitoring reports. Until such notification is given, the Discharger shall submit self-monitoring reports in accordance with the requirements described below.

2. The Discharger shall submit quarterly and annual Self Monitoring Reports including the results of all required monitoring using USEPA-approved test methods or other test methods specified in this Order. Quarterly reports shall be due on May 1, August 1, November 1, and February 1 following each calendar quarter; Annual reports shall be due on March 1 following each calendar year.

3. Monitoring periods and reporting for all required monitoring shall be completed according to the following schedule:

Sampling Frequency	Monitoring Period Begins On...	Monitoring Period	SMR Due Date
Continuous	June 24, 2005	All	May 1 August 1 November 1 February 1
1 / day	June 24, 2005	Midnight through 11:59 PM or any 24-hour period that reasonably represents a calendar day for purposes of sampling.	"
1/ week	Sunday following June 24, 2005 or on June 24, 2005 if on a Sunday	Sunday through Saturday	"
1 / month	First day of calendar month following June 24, 2005	1st day of calendar month through last day of calendar month	"
1 / quarter	Closest of January 1, April 1, July 1, or October 1 following June 24, 2005	January 1 through March 31 April 1 through June 30 July 1 through September 30 October 1 through December 31	May 1 August 1 November 1 February 1
1 / year	January 1 following June 24, 2005	January 1 through December 31	March 1

5. The Discharger shall arrange all reported data in a tabular format. The data shall be summarized to clearly illustrate whether the facility is operating in compliance with interim and/or final effluent limitations.

6. The Discharger shall attach a cover letter to the SMR. The information contained in the cover letter shall clearly identify violations of the WDRs; discuss corrective actions taken or planned; and the proposed time schedule for corrective actions. Identified violations must include a description of the requirement that was violated and a description of the violation.

7. SMRs must be submitted to the Regional Water Board, signed and certified to the address listed below:

Gerard J. Thibeault, Executive Officer
California Regional Water Quality Control Board
Santa Ana Region
3737 Main Street, Suite 500
Riverside, CA 92501-3348

VIII. PQL and EPA PPL

PRACTICAL QUANTITATION LEVELS FOR COMPLIANCE DETERMINATION			
	Constituent	**RL µg/l**	**Analysis Method**
1	Arsenic	7.5	GF/AA
2	Barium	20	ICP/GFAA
3	Cadmium	15	ICP
4	Chromium (VI)	15.0	ICP
5	Cobalt	10.0	GF/AA
6	Copper	19.0	GF/ICP
7	Cyanide	50.0	335.2/335.3
8	Iron	100.0	ICP
9	Lead	26.0	GF/AA
10	Manganese	20.0	ICP
11	Mercury	0.5	CV/AA
12	Nickel	50.0	ICP
13	Selenium	14.0	GF/HYDRIDE GENERATION
14	Silver	16.0	ICP
15	Zinc	20	ICP
16	1,2 - Dichlorobenzene	5.0	601/602/624
17	1,3 - Dichlorobenzene	5.0	601
18	1,4 - Dichlorobenzene	5.0	601
18	2,4 - Dichlorophenol	10.0	625/604
20	4 - Chloro -3-methylphenol	10.0	625/604
21	Aldrin	0.04	608
22	Benzene	1.0	602/624
23	Chlordane	0.30	608
24	Chloroform	5.0	601/624
25	DDT	0.10	608
26	Dichloromethane	5.0	601/624
27	Dieldrin	0.10	608
28	Fluorantene	10.0	625/610
29	Endosulfan	0.50	608
30	Endrin	0.10	608
31	Halomethanes	5.0	601/624
32	Heptachlor	0.03	608
33	Hepthachlor Epoxide	0.05	608
34	Hexachlorobenzene	10.0	625
35	Hexachlorocyclohexane		
	Alpha	0.03	608
	Beta	0.03	608
	Gamma	0.03	608
36	PAH's	10.0	625/610
37	PCB	1.0	608
38	Pentachlorophenol	10.0	625/604
39	Phenol	10.0	625/604
40	TCDD Equivalent	0.05	8280
41	Toluene	1.0	602/625
42	Toxaphene	2.0	608
43	Tributyltin	0.02	GC
44	2,4,6-Trichlorophenol	10.0	625/604

EPA PRIORITY POLLUTANT LIST

Metals		Acid Extractibles		Base/Neutral Extractibles (continuation)	
1.	Antimony	45.	2-Chlorophenol	91.	Hexachloroethane
2.	Arsenic	46.	2,4-Dichlorophenol	92.	Indeno (1,2,3-cd) Pyrene
3.	Beryllium	47.	2,4-Dimethylphenol	93.	Isophorone
4.	Cadmium	48.	2-Methyl-4,6-Dinitrophenol	94.	Naphthalene
5a.	Chromium (III)	49.	2,4-Dinitrophenol	95.	Nitrobenzene
5b.	Chromium (VI)	50.	2-Nitrophenol	96.	N-Nitrosodimethylamine
6.	Copper	51.	4-Nitrophenol	97.	N-Nitrosodi-N-Propylamine
7.	Lead	52.	3-Methyl-4-Chlorophenol	98.	N-Nitrosodiphenylamine
8.	Mercury	53.	Pentachlorophenol	99.	Phenanthrene
9.	Nickel	54.	Phenol	100.	Pyrene
10.	Selenium	55.	2, 4, 6 – Trichlorophenol	101.	1,2,4-Trichlorobenzene
11.	Silver	**Base/Neutral Extractibles**		**Pesticides**	
12.	Thallium	56.	Acenaphthene	102.	Aldrin
13.	Zinc	57.	Acenaphthylene	103.	Alpha BHC
Miscellaneous		58.	Anthracene	104.	Beta BHC
14.	Cyanide	59.	Benzidine	105.	Delta BHC
15.	Asbestos (not required unless requested)	60.	Benzo (a) Anthracene	106.	Gamma BHC
16.	2,3,7,8-Tetrachlorodibenzo-P-Dioxin (TCDD)	61.	Benzo (a) Pyrene	107.	Chlordane
Volatile Organics		62.	Benzo (b) Fluoranthene	108.	4, 4' - DDT
17.	Acrolein	63.	Benzo (g,h,i) Perylene	109.	4, 4' - DDE
18.	Acrylonitrile	64.	Benzo (k) Fluoranthene	110.	4, 4' - DDD
19.	Benzene	65.	Bis (2-Chloroethoxy) Methane	111.	Dieldrin
20.	Bromoform	66.	Bis (2-Chloroethyl) Ether	112.	Alpha Endosulfan
21.	Carbon Tetrachloride	67.	Bis (2-Chloroisopropyl) Ether	113.	Beta Endosulfan
22.	Chlorobenzene	68.	Bis (2-Ethylhexyl) Phthalate	114.	Endosulfan Sulfate
23.	Chlorodibromomethane	69.	4-Bromophenyl Phenyl Ether	115.	Endrin
24.	Chloroethane	70.	Butylbenzyl Phthalate	116.	Endrin Aldehyde
25.	2-Chloroethyl Vinyl Ether	71.	2-Chloronaphthalene	117.	Heptachlor
26.	Chloroform	72.	4-Chlorophenyl Phenyl Ether	118.	Heptachlor Epoxide
27.	Dichlorobromomethane	73.	Chrysene	119.	PCB 1016
28.	1,1-Dichloroethane	74.	Dibenzo (a,h) Anthracene	120.	PCB 1221
29.	1,2-Dichloroethane	75.	1,2-Dichlorobenzene	121.	PCB 1232
30.	1,1-Dichloroethylene	76.	1,3-Dichlorobenzene	122.	PCB 1242
31.	1,2-Dichloropropane	77.	1,4-Dichlorobenzene	123.	PCB 1248
32.	1,3-Dichloropropylene	78.	3,3'-Dichlorobenzidine	124.	PCB 1254
33.	Ethylbenzene	79.	Diethyl Phthalate	125.	PCB 1260
34.	Methyl Bromide	80.	Dimethyl Phthalate	126.	Toxaphene
35.	Methyl Chloride	81.	Di-n-Butyl Phthalate		
36.	Methylene Chloride	82.	2,4-Dinitrotoluene		
37.	1,1,2,2-Tetrachloroethane	83.	2-6-Dinitrotoluene		
38.	Tetrachloroethylene	84.	Di-n-Octyl Phthalate		
39.	Toluene	85.	1,2-Dipenylhydrazine		
40.	1,2-Trans-Dichloroethylene	86.	Fluoranthene		
41.	1,1,1-Trichloroethane	87.	Fluorene		
42.	1,1,2-Trichloroethane	88.	Hexachlorobenzene		
43.	Trichloroethylene	89.	Hexachlorobutadiene		
44.	Vinyl Chloride	90.	Hexachlorocyclopentadiene		

Note: All laboratory analyses shall be performed in accordance with test procedures under 40 CFR 136 (latest edition) and shall meet the minimum levels specified in Appendix 4 of the Policy for Implementation of Toxics Standards for Inland Surface Waters, Enclosed Bays, and Estuaries of California

Revised: 1/12/2005

Attachment E – Fact Sheet – Table of Contents

Attachment E – Fact Sheet 2
I. Order Information 2
II. Facility Description 3
A. Description of Wastewater and Biosolids Treatment or Controls 3
B. Discharge Points and Receiving Waters 4
C. Stormwater Runoff from this Facility 5
D. Summary of Existing Requirements and Self-Monitoring Report (SMR) Data 5
E. Compliance Summary 6
F. Planned Changes 7
III. Applicable Plans, Policies, and Regulations 7
A. Legal Authorities 7
B. California Environmental Quality Act (CEQA) 7
C. State Regulations, Policies, and Plans 7
D. Industrial Stormwater Requirements 8
IV. Rationale For Effluent Limitations and Discharge Specifications 9
A. Technology-Based Effluent Limitations 9
1. Scope and Authority 9
2. Applicable Technology-Based Effluent Limitations 9
B. Water Quality-Based Effluent Limitations (WQBELs) 10
C. Reclamation Specifications 10
D. Final Effluent Limitations 10
V. Rationale for Receiving Water Limitations 12
A. Surface Water 12
B. Groundwater 12
VI. Rationale for Monitoring and Reporting Requirements 12
A. Influent Monitoring 12
B. Effluent Monitoring 12
VII. Public Participation 13
A. Notification of Interested Parties 13
B. Written Comments 13
C. Public Hearing 13
D. Waste Discharge Requirements Petitions 13
E. Information and Copying 14
F. Register of Interested Persons 14
G. Additional Information 14

ATTACHMENT E – FACT SHEET

As described in Section II of this Order, this Fact Sheet includes the legal requirements and technical rationale that serve as the basis for the requirements of this Order.

I. ORDER INFORMATION

The following table summarizes administrative information related to the facility.

WDID	**8 360108001**
Discharger	**Big Bear Area Regional Wastewater Agency**
Name of Facility	**Regional Treatment Plant, Big Bear City**
Facility Address	**122 Palomino Drive**
	Big Bear City, CA 92314
	San Bernardino
Facility Contact, Title and Phone	**Joseph Hanford, Interim Plant Superintendent (909) 584-4018**
Authorized Person to Sign and Submit Reports	**Steven Schindler, General Manager, (909) 584-4018 Joseph Hanford, Interim Plant Superintendent**
Mailing Address	**P. O. BOX 517, 122 Palomino Drive, Big Bear City, Ca 92314**
Billing Address	**SAME**
Type of Facility	**POTW**
Major or Minor Facility	**Major**
Threat to Water Quality	**2**
Complexity	**B**
Pretreatment Program	**N**
Reclamation Requirements	**Producer/User**
Facility Permitted Flow	**4.89 mgd**
Facility Design Flow	**4.89 mgd**
Watershed	**Big Bear Lake**
Receiving Water	**pond in the Baldwin lake, Big Bear Valley Groundwater management zone**
Receiving Water Type	**surface water in the state and groundwater**

A. Big Bear Area Regional Wastewater Agency (hereinafter Discharger) is the owner and operator of Regional Treatment Plant (hereinafter Facility), a POTW.

B. The Facility discharges wastewater to ponds and irrigation and construction sites that overlie the Lucerne Hydrologic Unit (Region 7) or the Big Bear Valley groundwater management zone. The discharges are currently regulated by Order No. 00-12, which was adopted on February 25, 2000 and expired on February 1, 2005.

C. The Discharger filed a report of waste discharge and submitted an application for renewal of its Waste Discharge Requirements (WDRs) on August 25, 2004. Supplemental Information was requested on January 14, 2005 and following in February 2005. Information was received on January and February 2005. A site visit was conducted on April 11, 2005, to observe operations and collect additional data to develop limitations and conditions.

II. FACILITY DESCRIPTION

A. Description of Wastewater and Biosolids Treatment or Controls

Big Bear Area Regional Wastewater Agency (BBARWA) is a joint powers authority consisting of Big Bear City Community Services District, City of Big Bear Lake and San Bernardino County Service Area 53-B. BBARWA owns and operates a Regional Treatment Plant (RTP) located at 122 Palomino Drive, Big Bear City, in the SW¼ of Section 7, T2N, R2E, SBB&N. The RTP is adjacent to the Baldwin Lake and protected by a dike. The RTP is located at elevation of approximately 6714 feet, which is 3 feet above the estimated 100-year flood elevation of the Baldwin Lake.

Discharges from the facility are currently regulated under Order No. 00-12, NPDES No. CA80000344. That Order expired on February 1, 2005 and was not administratively extended. On August 26, 2004, BBARWA submitted a Report of Waste Discharge for the renewal of waste discharge requirements for BBARWA's Regional Treatment Plant (RTP).

The RTP treats commercial and domestic wastes from the City of Big Bear Lake, Big Bear City Community Services District and County Service Area 53-B. In 2003, the total equivalent dwelling units (EDUs) in the service area were 23,800 units with an estimated population of 59,500 on full or part time basis.

The RTP is designed to secondarily treat up to 4.89 million gallons per day (mgd) of wastewater and tertiary treat up to 1.0 mgd of wastewater. The RTP currently treats an annual average flow at 2.2 mgd. Of the effluent flow, up to 0.07 mgd is for recycled water reuse in the Big Bear area and up to 2 mgd is used for irrigation of alfalfa in Lucerne Valley.

The RTP treatment system consists of the following:

1. Preliminary treatment consists of bar screens and an aerated grit chamber;
2. Secondary treatment utilizes oxidation ditches, secondary clarifiers, and symbio process for nutrient removal;
3. Tertiary treatment consists of micro-filtration and/or 6 gpm reverse osmosis;
4. Disinfection of secondary treated effluent is done by chlorination while tertiary treated effluent is disinfected through ultraviolet light;
5. Sludge treatment system consists of sand dewatering bed, dissolved air flotation unit and belt filter press; sludge is hauled away. The discharger added a 20,000 square foot asphalt bed for further sludge drying.

B. Discharge Points and Receiving Waters

As previously noted, the RTP currently discharges 2.2 mgd of secondary treated wastewater and 0.03 mgd tertiary treated wastewater. The treated wastewater is either discharged to one or more of the following Discharge Points:

001. Secondary treated, but non-disinfected effluent is discharged to effluent storage ponds No. 16 and 21 prior to discharged to the pipeline to Lucerne Valley[1], where the effluent is used for irrigation of fodder, fiber and seed crops. If there is no demand of water for irrigation, the recycled water is stored in two earth basins for evaporation/percolation disposal in Lucerne Valley.

002. Secondary treated and chlorinated effluent is stored in pond No. 14A. Stored water is hauled by tanker truck for delivery to individual recycled water users at construction sites.

BBARWA proposes to convert its existing disposal pond located in the Baldwin Lake into a Wildlife Habitat Area (WHA). This area is surrounded by dike separating it from the remainder of the Baldwin Lake. The top of the dike has a general elevation of 6699 to 6700 feet, about 4 feet above lake bottom. When water in the Baldwin Lake exceeds 6700 feet elevation, the diked area is inundated. Secondary treated and chlorinated effluent is proposed for reuse at the WHA when there is little or no water in Baldwin Lake. During wet months, there would be no treated effluent delivered to the proposed WHA.

003. Tertiary treated and UV disinfected wastewater is stored in pond No. 14B. Stored wastewater is trucked or piped to individual recycled water users for landscape irrigation.

The Discharger is authorized to discharge from the following discharge points as set forth below:

Discharge Point	Effluent Description	Discharge Point Latitude	Discharge Point Longitude	Receiving Water	Disposal Site	Recycling Reuse
001	Secondary effluent without disinfection	34 ° 26' 20" N	116 ° 51' 20" W	Lucerne Hydrologic Unit	Storage Ponds in Lucerne Valley	Irrigation in Lucerne Valley
002	Secondary effluent with disinfection	34 ° 16' 10" N	116 ° 49' 00" W	State surface water: a pond in Baldwin Lake; Big Bear Valley groundwater management zone	--	construction and wildlife habitat
003	Tertiary effluent with disinfection	34 ° 16' 10" N	116 ° 49' 00" W	Big Bear Valley groundwater management zone	--	Irrigation

The facility location map is shown on Attachment "B".

The flow diagram for the wastewater treatment process is shown on Attachment "C".

[1] The Colorado River Basin Regional Water Quality Control Board (Region 7) has issued waste discharge requirements for the use of the recycled wastewater in the Lucerne Valley.

C. Stormwater Runoff from this Facility

Stormwater runoff from the RTP discharges into a flood zone, which is located at the east side of the plant. The flood zone is about 630 feet long and 60 to 80 feet wide. The flood zone has a holding capacity of about 75,000 gallons. In heavy storm seasons, there is the possibility of overflow from the flooding zone into offsite surface waters.

D. Summary of Existing Requirements and Self-Monitoring Report (SMR) Data

Effluent limitations/Discharge Specifications contained in the current Order for discharges from **Discharge Points 001 and 002, and** Monitoring Location 001 and 002, and representative monitoring data from the term of the previous Order are as follows:

Parameter (units)	Effluent Limitation			Monitoring Data (From April 1, 2002 – To March 31, 2005)		
	Average Monthly	Average Weekly	Maximum Daily	Highest Average Monthly Discharge	Highest Average Weekly Discharge	Highest Daily Discharge
BOD_5 (mg/l)	30	45	45	16	42	42
Suspended Solids (mg/l)	30	45	45	17	38	38
Electroconductivity	NA	NA	NA	745		1157
pH Daily Average Continuous Recorder (SU)	Daily Minimum 6.5	NA	8.5	7.92		8.20
TDS (mg/l)	550(1)	NA	NA	436(1)	481	481
Total Inorganic Nitrogen (mg/l)	10(2)	NA	NA	5.8	26.5	26.5
Chloride(mg/l)	NA	NA	NA	52	60	60
Iron (mg/l)	NA	NA	NA	0.35		0.35
Manganese (mg/l)	NA	NA	NA	0.47		0.47
Sodium (mg/l)	NA	NA	NA	120		120
Sulfate(mg/l)	NA	NA	NA	50	55	55
Total Phosphorus (mg/l)	NA	NA	NA	3.6		3.6
Coliform MPN (Construction Water)	NA	NA	240(3)			>1600
Coliform MPN (Irrigation Water)	NA	NA	240(3)			70
Fluoride (mg/l)	NA	NA	NA	0.89	0.99	0.99
Nitrate-N (mg/l)	NA	NA	NA		10.7	10.7

(1) - TDS shall not exceed 12-month flow weighted average concentration of 550mg/l and shall not exceed 12-month average TDS of water supply by 250mg/l.
(2) – Discharge shall not exceed 12-month flow weighted average of 10 mg/l total inorganic nitrogen.
(3) – Discharge shall not exceed 240 MPN for 2 consecutive days.

Parameter (units)	Effluent Limitation			Monitoring Data (From April 1, 2002 – To March 31, 2005)		
	Average Monthly	Average Weekly	Maximum Daily	Highest Average Monthly Discharge	Highest Average Weekly Discharge	Highest Daily Discharge
Antimony (ug/l)	NA	NA	NA	<6.0		
Arsenic (ug/l)	NA	NA	NA	<2.0		
Beryllium (ug/l)	NA	NA	NA	<1.0		
Boron (ug/l)	NA	NA	NA	270		
Cadmium (ug/l)	NA	NA	NA	<1.0		
Chromium-Total Cr (ug/l)	NA	NA	NA	<10		
Lead (ug/l)	NA	NA	NA	<5.0		
Mercury (ug/l)	NA	NA	NA	<1.0		
Nickel (ug/l)	NA	NA	NA	<10		
Selenium (ug/l)	NA	NA	NA	<5.0		
Silver (ug/l)	NA	NA	NA	<10		
Thallium (ug/l)	NA	NA	NA	<1.0		
Zinc (ug/l)	NA	NA	NA	96		
Copper (ug/l)	NA	NA	NA	<50		
VOC's EPA 601/602/603 (ug/l)	NA	NA	NA	ND		

E. Compliance Summary

Data review indicated that wastewater discharges from this treatment plant were in full compliance with waste discharge requirements of Order No. 00-12.

F. Planned Changes

The discharger eliminated two existing surface water discharge outfalls: the East end of Stanfield Marsh Outfall 002 and the Baldwin Lake Stickleback Habitat Outfall 003.

The Discharger proposes to deliver ***disinfected secondary treated wastewater*** to the discharger's existing wastewater disposal pond in the Baldwin Lake for the purpose of converting the pond into a Wildlife Habitat Area (WHA) when Baldwin Lake is dry or has little water in it.

III. APPLICABLE PLANS, POLICIES, AND REGULATIONS

Based on the U.S. Army Corps of Engineers, the discharger's existing disposal pond in the Baldwin Lake is not considered waters of the U.S. Consequently, this Order is issued as a Waste Discharge and Producer/User Water Recycling Requirements.

The requirements contained in the proposed Order are based on the requirements and authorities described in this section.

A. Legal Authorities

This Order is issued pursuant to Chapter 5.5, Division 7 of the California Water Code (CWC). This Order serves as Waste Discharge Requirements (WDRs) pursuant to Article 4, Chapter 4 of the CWC for discharges that are not subject to regulation under CWA section 402.

B. California Environmental Quality Act (CEQA)

The project involves the update of waste discharge requirements for an existing facility and, as such, is exempt from the California Environmental Quality Act (Public Resources Code, Section 21100 et. seq.) in accordance with Section 15301, Chapter 3, Title 14, California Code of Regulations.

C. State Regulations, Policies, and Plans

1. **Water Quality Control Plans.**
   The Regional Water Board adopted a Water Quality Control Plan for the Santa Ana River Region (hereinafter Basin Plan) that designates beneficial uses, establishes water quality objectives, and contains implementation programs and policies to achieve those objectives for all waters addressed through the plan. More recently, the Basin Plan was amended significantly to incorporate revised boundaries for groundwater subbasins, now termed "management zones", new nitrate-nitrogen and TDS objectives for the new management zones, and new nitrogen and TDS management strategies applicable to both surface and ground waters. This Basin Plan Amendment was adopted by the Regional Board on January 22, 2004. The State Water Resources Control Board and Office of Administrative Law (OAL) approved the Amendment on September 30, 2004 and December 23, 2004, respectively. Beneficial uses applicable to Big Bear Valley Groundwater Management Zone are as follows:

Discharge Point	Receiving Water Name	Beneficial Use(s)
001	Lucerne Hydrologic Unit	Based on Region 7's Basin Plan. 1. Municipal supply 2. Industrial supply 3. Agricultural supply
002	A pond in Baldwin Lake; and Big Bear Valley groundwater management zone	Beneficial Uses for Baldwin Lake: Intermittent: 1. Water contact recreation (REC-1), 2. Non-contact water recreation (REC-2), 3. Warm freshwater habitat (WARM), 4. Cold freshwater habitat (COLD), 5. Preservation of biological habitats of special significance (BIOL), 6. Wildlife habitat (WILD), and 7. Rare, threatened or endangered species (RARE). Beneficial Uses for groundwater management zone: Present or Potential: 1. Municipal and domestic supply, and 2. industrial service supply. .
003	Big Bear Valley groundwater management zone	Beneficial Uses for ground water management zone: Present or potential: Municipal and domestic supply, industrial service supply.

2. **Antidegradation Policy.** State Water Board Resolution No. 68-16 requires that existing water quality is maintained unless degradation is justified based on specific findings. The permitted discharge is consistent with the antidegradation provision of State Water Board Resolution No. 68-16.

3. **Monitoring and Reporting Requirements**. Sections 13267 and 13383 of the CWC authorize the Regional Water Boards to require technical and monitoring reports. The Monitoring and Reporting Program (MRP) establishes monitoring and reporting requirements to implement federal and State requirements. This MRP is provided in Attachment D.

D. Industrial Stormwater Requirements

Pursuant to Section 402(p) of Clean Water Act and Title 40 of the Code of Federal Regulations (CFR) Part 122, 123, and 124, the State Water Resources Control Board adopted general NPDES permits to regulate storm water discharges associated with industrial activities (State Board Order No. 97-03-DWQ) adopted on April 17, 1997. The discharger shall submit notice of intent to be covered under this general permit and develop and implement Storm Water Pollution Prevention Plans to comply with the general NPDES permit.

IV. RATIONALE FOR EFFLUENT LIMITATIONS AND DISCHARGE SPECIFICATIONS

A. Technology-Based Effluent Limitations

1. Scope and Authority

Regulations promulgated in 40 CFR §125.3(a)(1) require technology-based effluent limitations for municipal Dischargers to be placed in waste discharge requirements based on Secondary Treatment Standards or Equivalent to Secondary Treatment Standards.

The Federal Water Pollution Control Act Amendments of 1972 (PL 92-500) established the minimum performance requirements for POTWs [defined in Section 304(d)(1)]. Section 301(b)(1)(B) of that Act requires that such treatment works must, as a minimum, meet effluent limitations based on secondary treatment as defined by the USEPA Administrator.

Based on this statutory requirement, USEPA developed secondary treatment regulations, which are specified in 40 CFR 133. These technology-based regulations apply to all municipal wastewater treatment plants and identify the minimum level of effluent quality attainable by secondary treatment in terms of biochemical oxygen demand (BOD_5), total suspended solids (TSS), and pH.

2. Applicable Technology-Based Effluent Limitations

Summary of Technology-based Effluent Limitations
For Secondary Treated Effluent
Discharge Points for Discharge Point 001 and 002

Parameter	Units	Effluent Limitations	
		Average Monthly	Average Weekly
Biochemical Oxygen Demand 5-day @ 20°C	mg/L	30	45
	lbs/day[2]	1,223	1,835
Total Suspended Solids	mg/L	30	45
	lbs/day[2]	1,223	1,835

Summary of Technology-based Effluent Limitations
For Tertiary Treated Effluent
Discharge Points for Discharge Point 003

FOR DISCHARGE SERIAL NO. 003			
Parameter	Units	Effluent Limitations	
		Average Monthly	Average Weekly
Biochemical Oxygen Demand 5-day @ 20°C	mg/L	20	30
	lbs/day[3]	167	250
Total Suspended Solids	mg/L	20	30
	lbs/day	167	250

[2] Based on a design capacity of 4.89 mgd for secondary treatment.
[3] Based on tertiary flow of 1.0 mgd.

B. Water Quality-Based Effluent Limitations (WQBELs)

1. Basin Plan states that pH value for groundwater discharge shall not be raised above 9 or depressed below 6 as a result of controllable water quality factors.

2. The dissolved mineral content of the waters of the region as measured by the total dissolved solids test shall not exceed the specific objectives as a result of controllable water quality factors. The TDS and TIN limitations are the same as those in the prior Order No. 00-12 to protect groundwater quality.

C. Reclamation Specifications

Section 13523 of the California Water Code provides that a regional board, after consulting with and receiving the recommendations from the CDHS and any party who has requested in writing to be consulted, and after any necessary hearing, shall prescribe water reclamation requirements for water which is used or proposed to be used as recycled water, if, in the judgment of the Board, such requirements are necessary to protect the public health, safety, or welfare. Section 13523 further provides that such requirements shall include, or be in conformance with, the statewide uniform water recycling criteria established by the CDHS pursuant to California Water Code Section 13521.

This Order implements Title 22 Code of Regulations, Division 4, Environmental Health. The coliform limitations are set up for secondary and tertiary treated wastewater, respectively. Turbidity limits are set up for tertiary treated wastewater for irrigation.

D. Final Effluent Limitations

Effluent limitations – Discharge Points – 001, 002, and 003, beginning June 24, 2005:

1. The discharge of wastewater to Lucerne Valley and recycled water reuse for irrigation, construction, and wildlife habitat shall maintain compliance with the following limitations at Discharge Points 001, 002, and 003, with compliance measured at each individual monitoring location as described in the attached Monitoring and Reporting Program (Attachment D). The wastewater shall at all times be oxidized.

FOR DISCHARGE POINTS NO. 001 AND 002			
		Discharge Limitations	
Parameter	Units	Average Monthly	Average Weekly
Biochemical Oxygen Demand 5-day @ 20°C	mg/L	30	45
	lbs/day[4]	1,223	1,835
Total Suspended Solids	mg/L	30	45
	lbs/day[4]	1,223	1,835

[4] Based on a design capacity of 4.89 mgd for secondary treatment.

FOR DISCHARGE POINT NO. 003			
Parameter	**Units**	**Discharge Limitations**	
		Average Monthly	**Average Weekly**
Biochemical Oxygen Demand 5-day @ 20°C	mg/L	20	30
	lbs/day[5]	167	250
Total Suspended Solids	mg/L	20	30
	lbs/day[5]	167	250

2. The pH of the effluent, measured at each monitoring point, shall at all times be within the range of 6 and 9 pH units.

3. Percent Removal: The monthly average biochemical oxygen demand and suspended solids concentrations of the discharge shall not be greater than fifteen percent (15%) of the monthly average influent concentrations.

4. TDS Limitations: for effluent limitations a. and b., below, the lower of the two total dissolved solids limits is the limit. The TDS limitations are applicable for DP Nos. 002 and 003.

   a. The 12-month average[6] total dissolved solids concentration shall not exceed 550 mg/l and the 12-month flow weighted average shall not exceed 22,430 lbs/day[7], and
   b. The 12-month average total dissolved solids concentration shall not exceed the 12-month average total dissolved solids concentration in the water supply by more than 250 mg/l.

5. Total Inorganic Nitrogen (TIN) Limitations: The 12-month flow-weighted average TIN concentration shall not exceed 10 mg/l.

6. For Discharge from Discharge Point 003: Tertiary treated recycled water shall at all times be a filtered and subsequently disinfected wastewater that meets the following criteria:

   a. The turbidity of the filtered wastewater does not exceed any of the following:

      i. 0.2 NTU more than 5 percent of the time within a 24-hour period; and
      ii. 0.5 NTU at any time.

   b. Disinfected tertiary wastewater shall meet the following criteria:

      i. The median concentration of total coliform bacteria measured in the disinfected effluent shall not exceed a most probable number (MPN) of 2.2 per 100 milliliters utilizing the bacteriological results of the last seven days for which analyses have been completed.
      ii. The number of total coliform bacteria shall not exceed an MPN of 23 per 100 milliliters in more than one sample in any 30-day period.
      iii. No sample shall exceed an MPN of 240 total coliform bacteria per 100 milliliters.

---

5 Based on a design capacity of 1.0 mgd for tertiary treatment.
6 See Section VII. D Compliance Determination.
7 Calculated from 4.89 mgd x 8.34 x 550 mg/l.

7. For Discharge Point 002: wastewater shall at all times be an oxidized and subsequently disinfected wastewater that meets the following criteria:

   a. The median concentration of total coliform bacteria in the disinfected effluent shall not exceed an MPN of 23 per 100 milliliters utilizing the bacteriological results of the last even days for which analyses have been completed[8].

   b. The number of total coliform bacteria shall not exceed an MPN of 240 per 100 milliliters in more than one sample in any 30-day period.

V. RATIONALE FOR RECEIVING WATER LIMITATIONS

A. Surface Water

Discharge to Discharge Point 002 to the pond (WHA) in the Baldwin Lake takes place in the dry season when the pond is dry or contains no natural flow. Therefore, no surface water limit is needed.

B. Groundwater

The soils in the on-site storage/holding ponds, and the Wildlife Habitat Area in the Baldwin Lake have low percolation rates. However, there is a potential for percolation for recycled water in the irrigation and construction site areas. Therefore, this order established TDS limits and total inorganic nitrogen limit to protect groundwater quality.

VI. RATIONALE FOR MONITORING AND REPORTING REQUIREMENTS

Sections 13267 and 13383 of the California Water Code authorize the Water Boards to require technical and monitoring reports. The Monitoring and Reporting Program, Attachment D of this Order, establishes monitoring and reporting requirements to implement federal and state requirements. The following provides the rationale for the monitoring and reporting requirements contained in the Monitoring and Reporting Program for this facility.

A. Influent Monitoring

To monitor influent flow to protect operation of the treatment plant and to identify any pollutant into the plant. BOD/TSS monitoring is to measure the BOD/TSS removal rate.

B. Effluent Monitoring

To determine compliance with effluent limitations, all parameters established in this Order must be monitored and tested. Other parameters, such as priority pollutants and minerals are also required to be monitored based on Basin Plan.

---

8 Title 22, 60301.220.

VII. PUBLIC PARTICIPATION

The California Regional Water Quality Control Board, Santa Ana Region (Regional Water Board) is considering the issuance of waste discharge requirements (WDRs) for BBARWA's Regional Treatment Plant. As a step in the WDR adoption process, the Regional Water Board staff has developed tentative WDRs. The Regional Water Board encourages public participation in the WDR adoption process.

A. Notification of Interested Parties

The Regional Water Board has notified the Discharger and interested agencies and persons of its intent to prescribe waste discharge requirements for the discharge and has provided them with an opportunity to submit their written comments and recommendations. Notification was provided through the posting of Notice of Public Hearing at Big Bear Lake City Hall on May 25, 2005 and posting of Notice of Public Hearing at the Regional Board website.

B. Written Comments

The staff determinations are tentative. Interested persons are invited to submit written comments concerning these tentative WDRs. Comments should be submitted either in person or by mail to the Executive Office at the Regional Water Board at the address above on the cover page of this Order.

To be fully responded to by staff and considered by the Regional Water Board, written comments should be received at the Regional Water Board offices by 5:00 p.m. on **June 6, 2005.**

C. Public Hearing

The Regional Water Board will hold a public hearing on the tentative WDRs during its regular Board meeting on the following date and time and at the following location:

Date:	**June 24, 2005**
Time:	**9:00 am**
Location:	**City Council Of Loma Linda** **25541 Barton Road** **City Of Loma Linda**

Interested persons are invited to attend. At the public hearing, the Regional Water Board will hear testimony, if any, pertinent to the discharge and WDRs. Oral testimony will be heard; however, for accuracy of the record, important testimony should be in writing.

Please be aware that dates and venues may change. Our web address is ***http://www.waterboards.ca.gov/santaana*** where you can access the current agenda for changes in dates and locations.

D. Waste Discharge Requirements Petitions

Any aggrieved person may petition the State Water Resources Control Board to review the decision of the Regional Water Board regarding the final WDRs. The petition must be submitted within 30 days of the Regional Water Board's action to the following address:

State Water Resources Control Board
Office of Chief Counsel
P.O. Box 100, 1001 I Street
Sacramento, CA 95812-0100

E. Information and Copying

The Report of Waste Discharge (RWD), related documents, tentative effluent limitations and special provisions, comments received, and other information are on file and may be inspected at the address above at any time between 8:30 a.m. and 4:45 p.m., Monday through Friday. Copying of documents may be arranged through the Regional Water Board by calling (951) 782-4130.

F. Register of Interested Persons

Any person interested in being placed on the mailing list for information regarding the WDRs should contact the Regional Water Board, reference this facility, and provide a name, address, and phone number.

G. Additional Information

Requests for additional information or questions regarding this order should be directed to Jane Qiu at (951) 320-2008 or jqiu@waterboards.ca.gov.

California Regional Water Quality Control Board
Santa Ana Region

Alan C. Lloyd, Ph.D.
Agency Secretary

3737 Main Street, Suite 500, Riverside, California 92501-3348
Phone (951) 782-4130 - FAX (951) 781-6288
http://www.waterboards.ca.gov/santaana

Arnold Schwarzenegger
Governor

May 25, 2005

Steven Schindler, General Manager
Big Bear Area Regional Wastewater Agency
P.O. Box 517
122 Palomino Drive
Big Bear City, CA 92314-0517

RENEWAL OF WASTE DISCHARGE AND PRODUCER/USER WATER RECYCLING REQUIREMENTS FOR BIG BEAR AREA REGIONAL WASTEWATER AGENCY, REGIONAL TREATMENT PLANT, BIG BEAR CITY, SAN BERNARDINO COUNTY, ORDER NO. R8-2005-0044

Dear Mr. Schindler:

Enclosed is a copy of tentative Order No. R8-2005-0044. The tentative Order includes updated waste discharge and producer/user water-recycling requirements for the Regional Treatment Plant in Big Bear City, San Bernardino County.

This Order is scheduled for consideration by the Regional Board on June 24, 2005. The Board meeting will start at 9 a.m. and will be held at the City Council Chambers of Loma Linda, 25541 Barton Road, Loma Linda. Although all comments that are provided up to and during the public hearing on this matter will be considered, receipt of comments by June 6, 2005, would be appreciated so that they can be used in the formulation of the draft Order that will be transmitted to the Board two weeks prior to the hearing. The draft Order may contain changes resulting from comments received from you and others. To view and/or download a copy of the draft Order, please access our website at http://www.waterboards.ca.gov/santaana on or after June 13, 2005.

State regulations require that the public be notified of the public hearing regarding these waste discharge requirements at least 30 days in advance. Therefore, in order for the Board to consider your waste discharge requirements on June 24, 2005, such notice must be made by May 25, 2005. Two copies of a "Notice of Public Hearing" are enclosed. Please post two copies in conspicuous places in the locality to be affected by the discharge (local post office, library, city hall, or courthouse). By June 6, 2005, you must file with this office proof of posting. Proof of posting shall consist of a statement executed on the enclosed form.

Please notice that the format of this proposed order differs significantly from prior orders. The is due to changes being made statewide to assure permit consistency and streamlining

If you have any questions, please contact Jun Martirez (951) 782-3258 or Jane Qiu at (951) 320-2008.

Sincerely,

for Joanne E. Schneider
Environmental Program Manager

Enclosure: Tentative Order No. R8-2005-0044, Staff Report, Monitoring and Reporting Program

California Regional Water Quality Control Board
Santa Ana Region

Alan C. Lloyd, Ph.D.
Agency Secretary

3737 Main Street, Suite 500, Riverside, California 92501-3348
Phone (951) 782-4130 - FAX (951) 781-6288
http://www.waterboards.ca.gov/santaana

Arnold Schwarzenegger
Governor

May 25, 2005

U. S. Army District, Los Angeles, Corps of Engineers – Regulatory Branch
U. S. Fish and Wildlife Service - Carlsbad
State Water Resources Control Board, Office of the Chief Counsel – Jorge Leon
State Water Resources Control Board, Division of Water Quality- James Maughan
State Department of Water Resources – Glendale
State Department of Fish and Game – Long Beach
Regional Water Quality Control Board, Colorado River Basin Region (7)
California Department of Health Services, Carpenteria – Jeff Stone
California Department of Health Services, San Bernardino – Heather Collins
Orange County Water District – Nira Yamachika
San Bernardino County Department of Environmental Health Services – Daniel Avera
San Bernardino County Flood Control District – Naresh Varma
Santa Ana Watershed Project Authority – Daniel Cozad
City of Big Bear Lake – Michael Perry
City of San Bernardino - City Manager
City of Redlands – City Manager
Big Bear City Community Services District
National Heritage Foundation – Robert Lindblad
Engineering Resources – R. Barry Bierschbach
Lawyers for Clean Water C/c San Francisco Baykeeper
Natural Resources Defense Council- David Beckman

RENEWAL OF WASTE DISCHARGE AND PRODUCER/USER WATER RECYCLING REQUIREMENTS FOR BIG BEAR AREA REGIONAL WASTEWATER AGENCY, REGIONAL TREATMENT PLANT, BIG BEAR CITY, SAN BERNARDINO COUNTY, ORDER NO. R8-2005-0044

Ladies and Gentlemen:

Enclosed is a copy of tentative Order No. R8-2005-0044. The tentative Order includes updated waste discharge and producer/user water-recycling requirements for the Regional Treatment Plant in Big Bear City, San Bernardino County.

This Order is scheduled for consideration by the Regional Board on June 24, 2005. The Board meeting will start at 9 am and will be held at the City Council Chambers of Loma Linda, 25541 Barton Road, Loma Linda. Although all comments that are provided up to and during the public hearing on this matter will be considered, receipt of comments by June 6, 2005, would be appreciated so that they can be used in the formulation of the draft Order that will be transmitted to the Board two weeks prior to the hearing. The draft Order may contain changes resulting from comments received from you and others. To view and/or download a copy of the draft Order, please access our website at http://www.waterboards.ca.gov/santaana on or after June 13, 2005.

Please notice that the format of this proposed order differs significantly from prior orders. This is due to changes being made statewide to assure permit consistency and streamlining

If you have any questions, please contact Jun Martirez (951) 782-3258 or Jane Qiu at (951) 320-2008.

Sincerely,

for Joanne E. Schneider
Environmental Program Manager

Enclosure: Tentative Order No. R8-2005-0044, Staff Report, Monitoring and Reporting Program