California Regional Water Quality Control Board
Santa Ana Region

August 25, 2006

ITEM: **14**

SUBJECT: Issuance of Waste Discharge Requirements for the Poseidon Resources (Surfside) L.L.C., Poseidon Seawater Desalination Facility, Order No. R8-2006-0034, NPDES No. CA8000403, Orange County

DISCUSSION:

See attached Fact Sheet

RECOMMENDATIONS:

Adopt Order No. R8-2006-0034, NPDES No. CA8000403 as presented.

COMMENT SOLICITATION:

Comments were solicited from the discharger and the following agencies:

U.S. Environmental Protection Agency, Permits Issuance Section (WTR-5) – Doug Eberhardt
U.S. Army District, Los Angeles, Corps of Engineers, Regulatory Branch
U.S. Fish and Wildlife Service – Carlsbad
State Water Resources Control Board, Office of the Chief Counsel – Jorge Leon
State Water Resources Control Board, Division of Water Quality – Phil Isorena
State Department of Health Services, Santa Ana – Shu-Fang Orr
State Department of Water Resources - Glendale
State Department of Fish and Game – Los Alamitos
State Lands Commission, Division of Land Management, Sacramento – Susan Young
Orange County Water District – Nira Yamachika/Greg Woodside
Orange County Public Facilities and Resources Department, Harbors, Beaches and Parks
Orange County Health Care Agency
AES Southland L.L.C. – Steve Maghy
City of Huntington Beach – Ron Davis, Planning Commissioner
Randy Fuhrman, Huntington Beach
Eileen Murphy, Huntington Beach
Paul Cross – Huntington Beach
Surfrider Foundation – Joe Geever
Environment Now- Ruby Evans
Orange County Coastkeeper – Garry Brown
Lawyers for Clean Water C/c San Francisco Baykeeper

California Regional Water Quality Control Board

Santa Ana Region

3737 Main Street, Suite 500, Riverside, California 92501-3348
Phone (951) 782-4130 - FAX (951) 781-6288
http://www.waterboards.ca.gov/santaana

ORDER NO. R8-2006-0034
NPDES NO. CA8000403

WASTE DISCHARGE REQUIREMENTS
FOR
POSEIDON RESOURCES (SURFSIDE) L.L.C., SEAWATER DESALINATION FACILITY
DISCHARGE TO THE PACIFIC OCEAN

The following Discharger is subject to waste discharge requirements set forth in this Order:

Table 1. Discharger Information

Discharger	**Poseidon Resources (Surfside) L.L.C.**
Name of Facility	**Poseidon Seawater Desalination Facility at Huntington Beach**
Facility Address	**21652 Newland Street**
	Huntington Beach, CA 92646
	Orange County
The U.S. Environmental Protection Agency (U.S. EPA) and the Regional Water Board have classified this discharge as a **major** discharge.	

The discharge by the Poseidon Resources (Surfside) L.L.C. from the discharge points identified below is subject to waste discharge requirements as set forth in this Order:

Table 2. Discharge Location

Discharge Serial	Effluent Description	Discharge Point Latitude	Discharge Point Longitude	Receiving Water
001	RO effluent, filter backwash, RO subsequent rinse wastewater, stormwater runoff	33 °, 38', 38"	117°, 58', 44"	Discharge to AES –HBGS[1] discharge pipeline to the Pacific Ocean

Table 3. Administrative Information

This Order was adopted by the Regional Water Board on:	**August 25, 2006**
This Order shall become effective on:	**August 25, 2006**
This Order shall expire on:	**August 1, 2011**
The Discharger shall file a Report of Waste Discharge in accordance with Title 23, California Code of Regulations, as application for issuance of new waste discharge requirements.	**February 2, 2011**

[1] AES (HBGS) – Aera Energy Services L.LC.- Huntington Beach Generating Station

IT IS HEREBY ORDERED, that in order to meet the provisions contained in Division 7 of the California Water Code (CWC) and regulations adopted thereunder and the provisions of the federal Clean Water Act (CWA) and regulations and guidelines adopted thereunder, the Discharger shall comply with the requirements in this Order.

I, Gerard J. Thibeault, Executive Officer, do hereby certify that Order No. R8-2006-0034 with all attachments is a full, true, and correct copy of an Order adopted by the California Regional Water Quality Control Board, Santa Ana Region, on August 25, 2006.

Gerard J. Thibeault, Executive Officer

TABLE OF CONTENTS

I. Facility Information 4
II. Findings 4
III. Discharge Prohibition 10
IV. Effluent Limitations and Discharge Specifications 10
  A. Effluent Limitations 10
  B. Land Discharge Specifications 13
  C. Reclamation Specifications 13
  D. Stormwater Requirements 14
V. Receiving Water Limitations 14
  A. Surface Water Limitations 14
  B. Groundwater Limitations 16
VI. Provisions 16
  A. Standard Provisions 16
  B. Monitoring and Reporting Program Requirements 19
  C. Special Provisions 19
VII. Compliance Determination 22

ATTACHMENT A - Definitions A-1
ATTACHMENT B – Vicinity Map B-1
ATTACHMENT C – Flow Schematic C-1
ATTACHMENT D – Federal Standard Provisions D-1
ATTACHMENT E – Monitoring & Reporting Program E-1
ATTACHMENT F – Fact Sheet F-1
ATTACHMENT G – Minimum Levels G-1
ATTACHMENT H – EPA Priority Pollutant List H-1
ATTACHMENT I – Practical Quantitation Levels I-1
ATTACHMENT J – Stormwater Pollution Prevention Plan Requirements J-1
ATTACHMENT K – Stormwater Monitoring Program & Reporting Requirements K-1

I. FACILITY INFORMATION

The following Discharger is subject to Waste Discharge Requirements as set forth in this Order:

Table 4. Facility Information

Discharger	**Poseidon Resources (Surfside) LLC.**
Name of Facility	**Poseidon Seawater Desalination Facility at Huntington Beach**
Facility Address	**21730 Newland Street**
	Huntington Beach, CA 92646
	Orange County
Facility Contact, Title, and Phone	**Billy Owens, Senior Vice President Project Development, (562) 490-2003**
Mailing Address	**3760 Kilroy Airport Way, Suite 260, Long Beach, CA 90806**
Type of Facility	**Industrial**
Facility Design Flow	**56.59 mgd**

II. FINDINGS

The California Regional Water Quality Control Board, Santa Ana Region (hereinafter Regional Water Board), finds:

A. Background. The Poseidon Resources (Surfside) LLC. (hereinafter Discharger) initially submitted a Report of Waste Discharge on May 27, 2003, and applied for a National Pollutant Discharge Elimination System (NPDES) Permit authorization to discharge 50 million gallons per day (MGD) of concentrated seawater, 6.3 MGD of filter backwash, 0.29 MGD of RO subsequent rinse wastewater, and stormwater runoff from their Poseidon Seawater desalination facility at Huntington Beach, hereinafter Facility. The application was deemed complete on February 3, 2006.

For the purposes of this Order, references to the "discharger" or "permittee" in applicable federal and State laws, regulations, plans, or policy are held to be equivalent to references to the Discharger herein.

B. Facility Description. The Discharger will produce potable water for delivery into the regional water distribution system for the Southern California Region and particularly Orange County. The Discharger will utilize approximately 100 MGD of heated condenser cooling water, from the Huntington Beach Generating Station (HBGS) owned and operated by AES Southland L.L.C (AES)[1] as source water for desalination. The desalination process will consist of source water screening, coagulation, filtration, pH adjustment, chlorination, de-chlorination, and reverse osmosis (RO) membrane separation, and product water chlorination and chemical conditioning. The RO system

[1] The Huntington Beach Generating Station is a steam electric power generating facility that is regulated under a separate NPDES permit.

will be a single-pass design using high-rejection seawater membranes. The system will be made up of 13 process trains, each train with a design capacity of about 4 MGD. The Facility will produce 50 MGD of potable water and 50 MGD of concentrated brine water. Approximately 4 MGD (6.3 MGD maximum) of filter backwash will be produced and will be mixed with the concentrated brine water. RO spent cleaning wastes (0.29 MGD) will be stored and treated. All the membrane cleaning waste streams will be conveyed to a 200,000 gallons washwater tank for used cleaning solution retention and treatment prior to discharge to the desalination plant effluent outfall. The Discharger will utilize chlorine in the form of sodium hypochlorite to control and prevent microbiological growth in the transmission pipelines and filter media. Chlorine will be injected before the influent to the filtration system. Chlorine will also be used to disinfect product water to meet the State Department of Health Services water quality standards. The concentrated brine water with other process wastewater described above will be discharged to the ocean through the existing AES outfall. Attachment B provides a map of the area around the facility. Attachment C provides a flow schematic of the facility.

The discharger has confirmed to Regional Board staff that in case the AES HBGS source water is not available from the AES facility, and/or when and if the nature of the source water changes, the discharger will submit a new report of waste discharge and apply for a new permit.

C. **Legal Authorities.** This Order is issued pursuant to Section 402 of the federal Clean Water Act (CWA) and implementing regulations adopted by the U.S. Environmental Protection Agency (USEPA) and Chapter 5.5, Division 7 of the California Water Code (Section 13370 *et seq*). It shall serve as a NPDES permit for point source discharges from this facility to surface waters. This Order also serves as Waste Discharge Requirements (WDRs) pursuant to Article 4, Chapter 4 of the (Section 13260 *et seq.*).

D. **Background and Rationale for Requirements.** The Regional Water Board developed the requirements in this Order based on information submitted as part of the application and through monitoring and reporting programs. The Fact Sheet (Attachment F), which contains background information and rationale for Order requirements, is hereby incorporated into this Order and constitutes part of the Findings for this Order. Attachments A through K are also incorporated into this Order.

E. **California Environmental Quality Act (CEQA).** Under Water Code Section 13389, this action to adopt an NPDES permit is exempt from the provisions of the CEQA, Public Resources Code sections 21100-21177.

In compliance with the California Environmental Quality Act, a re-circulated environmental impact report (EIR) for the Facility was certified by the City of Huntington Beach on September 6, 2005. On March 1, 2006, the City of Huntington Beach approved the Conditional Use Permit No. 02-04/Coastal Development Permit No. 02-05, CEQA Statement of Findings of Facts with Statement of Overriding Considerations and Mitigation Monitoring and Reporting Program.

F. **Technology-based Effluent Limitations.** The Code of Federal Regulations (CFR) at 40 CFR Section 122.44(a) requires that permits include applicable technology-based limitations and standards. However, due to the nature of the discharges, this Order does not include any technology-based effluent limitations.

G. **Water Quality-Based Effluent Limitations.** Section 301(b) of the CWA and section 122.44(d) require that permits include limitations more stringent than applicable federal technology-based requirements where necessary to achieve applicable water quality standards.

Section 122.44(d)(1)(i) mandates that permits include effluent limitations for all pollutants that are or may be discharged at levels that have the reasonable potential to cause or contribute to an exceedance of a water quality standard, including numeric and narrative objectives within a standard. Where numeric water quality objectives have not been established for a pollutant, water quality-based effluent limitations (WQBELs) must be established using: (1) USEPA criteria guidance under CWA Section 304(a), supplemented where necessary by other relevant information; (2) an indicator parameter for the pollutant of concern; or (3) a calculated numeric water quality criterion, such as a proposed State criterion or policy interpreting the State's narrative criterion, supplemented with other relevant information, as provided in 40 CFR Section 122.44(d)(1)(vi).

H. **Water Quality Control Plans.** The Regional Water Board adopted a revised Water Quality Control Plan for the Santa Ana Region (hereinafter Basin Plan) that became effective on January 24, 1995. The Basin Plan designates beneficial uses, establishes water quality objectives, and contains implementation programs and policies to achieve those objectives for the Pacific Ocean.

The Basin Plan relies primarily on the requirements of the *Water Quality Control Plan for Ocean Waters of California* (Ocean Plan) for protection of the beneficial uses of the State ocean waters. The Basin Plan, however, may contain additional water quality objectives applicable to the Discharger.

The State Water Board adopted a *Water Quality Control Plan for Control of Temperature in the Coastal* and *Interstate Water and Enclosed Bays and Estuaries of California* (Thermal Plan) on May 18, 1972, and amended this plan on September 18, 1975. This plan contains temperature objectives for coastal waters.

Requirements of this Order specifically implement the Basin Plan, Ocean Plan, and Thermal Plan.

Table 5. Basin Plan Beneficial Uses

Discharge Serial	Affected Receiving Water Name	Beneficial Use(s)
001[2]	Pacific Ocean Nearshore[3] Zone from the San Gabriel River to Poppy Street in Corona del Mar	Present or Potential Beneficial Use a. Industrial service supply, b. Navigation, c. Water contact recreation, d. Non-contact water recreation, e. Commercial and sportfishing, f. Wildlife habitat, g. Rare, threatened or endangered spieces, h. Spawning, reproduction, and development, i. Marine habitat, and j. Shellfish harvesting. Excepted from Municipal and Domestic supply
	Pacific Ocean Offshore Zone between the Nearshore Zone and the limit of the State waters	Present or Potential Beneficial Use a. Industrial service supply, b. Navigation, c. Water contact recreation, d. Non-contact water recreation, e. Commercial and sportfishing, f. Wildlife habitat, g. Rare, threatened or endangered species, h. Spawning, reproduction, and development, and i. Marine habitat. Excepted from Municipal and Domestic supply

Requirements of this Order specifically implement the applicable Water Quality Control Plans.

I. **California Ocean Plan.** The State Water Board adopted the Water Quality Control Plan for Ocean Waters of California, California Ocean Plan (Ocean Plan) in 1972 and amended it in 1978, 1983, 1988, 1990, 1997, 2000, and 2005. The State Water Board adopted the latest amendment on April 21, 2005 and it became effective on February 14, 2006. The Ocean Plan is applicable, in its entirety, to point source discharges to the ocean. The Ocean Plan identifies beneficial uses of ocean waters of the State to be protected as summarized below:

2 This discharge is to AES-HBGS discharge pipeline to the Pacific Ocean.

3 The Nearshore Zone is defined by the Ocean Plan, Chapter II, B.1.a., as "within a zone bounded by the shoreline and a distance of 1,000 feet from the shoreline or the 30 foot depth contour, whichever is further from the shoreline".

Table 6. Ocean Plan Beneficial Uses

Discharge Point	Receiving Water	Beneficial Uses
Outfall 001	Pacific Ocean	Industrial water supply; water contact and non-contact recreation, including aesthetic enjoyment; navigation; commercial and sport fishing; mariculture; preservation and enhancement of designated Areas of Special Biological Significance (ASBS); rare and endangered species; marine habitat; fish migration, fish spawning and shellfish harvesting

In order to protect the beneficial uses, the Ocean Plan establishes water quality objectives and a program of implementation. Requirements of this Order implement the Ocean Plan.

J. **Initial Dilution Factor.** In March 1980, the State Board investigated the initial dilution factor for the power plant ocean outfalls throughout the State. The State Board assigned an "initial dilution" factor of 7.5:1 to AES (Huntington Beach generating station outfall). Since the Discharger is utilizing AES effluent, it is appropriate to apply this dilution factor in establishing effluent limitations for discharges from this facility.

K. **Alaska Rule.** On March 30, 2000, USEPA revised its regulation that specifies when new and revised State and Tribal water quality standards (WQS) become effective for CWA purposes (40 CFR 131.21, 65 FR 24641, April 27, 2000). Under the revised regulation (also known as the Alaska rule), new and revised standards submitted to USEPA after May 30, 2000, must be approved by USEPA before being used for CWA purposes. The final rule also provides that standards already in effect and submitted to USEPA by May 30, 2000, may be used for CWA purposes, whether or not approved by USEPA.

L. **Stringency of Requirements for Individual Pollutants.** This Order contains restrictions on individual pollutants that are no more stringent than required by the federal CWA. Individual pollutant restrictions consist of technology-based restrictions and water quality-based effluent limitations. Because of the nature of the facility, no technology-based effluent limitations are applicable to this discharge. Water quality-based effluent limitations have been scientifically derived to implement water quality objectives that protect beneficial uses. Both the beneficial uses and the water quality objectives have been approved pursuant to federal law and are the applicable federal water quality standards. All relevant beneficial uses and water quality objectives contained in the Basin Plan and the Ocean Plan were approved under state law and submitted to and approved by USEPA prior to May 30, 2000. Any water quality objectives and beneficial uses submitted to USEPA prior to May 30, 2000, but not approved by USEPA before that date, are nonetheless "applicable water quality standards for purposes of the CWA" pursuant to 40 CFR 131.21(c)(1). Collectively, this Order's restrictions on individual pollutants are no more stringent than required to implement the technology-based requirements of the CWA and the applicable water quality standards for purposes of the CWA.

M. Stormwater. On April 17, 1997, the State Board adopted the General Industrial Storm Water Permit, Order No. 97-03-DWQ, NPDES No. CAS000001. This General Permit implements the Final Regulations (40 CFR 122, 123, and 124) for storm water runoff published on November 16, 1990 by EPA in compliance with Section 402(p) of the Clean Water Act (CWA). This Order includes pertinent provisions of the General Industrial Storm Water permit appropriate for this discharge. The Regional Water Board has determined that pollution prevention is necessary to achieve water quality objectives. Consequently, this Order requires the Discharger to establish, update as necessary, and implement a pollution prevention plan and stormwater monitoring.

N. Antidegradation Policy. Section 131.12 of 40 CFR requires that State water quality standards include an antidegradation policy consistent with the federal policy. The State Water Board established California's antidegradation policy in State Water Board Resolution 68-16, which incorporates the requirements of the federal antidegradation policy. Resolution 68-16 requires that existing quality of waters be maintained unless degradation is justified based on specific findings. As discussed in the Fact Sheet (Attachment F), the permitted discharge is consistent with the antidegradation provision of 40 CFR §131.12 and State Water Board Resolution 68-16.

O. Anti-Backsliding Requirements. Sections 402(o)(2) and 303(d)(4) of the CWA and federal regulations at 40 CFR § 122.44(l) prohibit backsliding in NPDES permits. These anti-backsliding provisions require effluent limitations in a reissued permit to be as stringent as those in the previous permit, with some exceptions where limitations may be relaxed. Since this is a new permit, anti-backsliding requirements are not applicable.

P. Monitoring and Reporting. Section 122.48 of 40 CFR requires that all NPDES permits specify requirements for recording and reporting monitoring results. Sections 13267 and 13383 of the CWC authorizes the Regional Water Board to require technical and monitoring reports. The Monitoring and Reporting Program establishes monitoring and reporting requirements to implement federal and State requirements. This Monitoring and Reporting Program is provided in Attachment E.

Q. Standard and Special Provisions. Standard Provisions, which in accordance with 40 CFR Sections 122.41 and 122.42, apply to all NPDES discharges and must be included in every NPDES permit, are provided in Attachment D. The Regional Water Board has also included in this Order special provisions applicable to the Discharger. The rationale for the special provisions contained in this Order is provided in the attached Fact Sheet (Attachment F).

R. Notification of Interested Parties. The Regional Water Board has notified the Discharger and interested agencies and persons of its intent to prescribe Waste Discharge Requirements for the discharge and has provided them with an opportunity to submit their written comments and recommendations. Details of notification are provided in the Fact Sheet (Attachment F) of this Order.

S. Consideration of Public Comment. The Regional Water Board, in a public meeting, heard and considered all comments pertaining to the discharge. Details of the Public Hearing are provided in the Fact Sheet (Attachment F) of this Order.

III. DISCHARGE PROHIBITIONS

A. Wastes discharged shall be limited to concentrated seawater, filter backwash, RO subsequent rinse wastewater, and stormwater runoff from the desalination facility.

B. The discharge of waste sludge or other solids generated as the result of Facility operations directly to the ocean, or into a waste stream that discharges to the ocean, is prohibited.

C. Discharge of wastes from any point other than Discharge Serial 001 is prohibited.

D. The discharge of any substances in concentrations toxic to animal or plant life in the affected receiving water is prohibited.

E. The discharge of any radiological, chemical, or biological warfare agent or high level radiological waste is prohibited.

IV. EFFLUENT LIMITATIONS AND DISCHARGE SPECIFICATIONS

A. Effluent Limitations:

1. Final Effluent Limitations

a. The discharge of wastes shall maintain compliance with the following effluent limitations[4] at Discharge Serial 001, with compliance measured at Monitoring Location[5] as described in the attached Monitoring & Reporting Program (Attachment E).

Parameter	Units	6-Month Median	Daily Maximum	Instantaneous Maximum
Arsenic	µg/L	46	250	658
	lbs/day	22	118	----
Cadmium	µg/L	9	34	85
	lbs/day	4	16	----
Chromium (Hexavalent)	µg/L	17	68	170
	lbs/day	8	32	----
Copper	µg/L	11	87	240
	lbs/day	5	41	----

[4] These limits are derived from Table B (Page 7) of the California Ocean Plan using the assigned dilution factor of 7.5 and using equation (1) on Page 13 of the California Ocean Plan. The mass loading, lb./day is computed using 56.59 MGD of wastewater discharge. Mass emission rate limits are derived using Equation 3 on Page 15 of the California Ocean Plan.

[5] Before RO effluent mixes with AES discharges

Parameter	Units	6-Month Median	Daily Maximum	Instantaneous Maximum
Lead	µg/L	17	68	170
	lbs/day	8	32	----
Mercury	µg/L	0.34	1.36	3.4
	lbs/day	0.16	0.64	----
Nickel	µg/L	43	170	425
	lbs/day	20	80	----
Silver	µg/L	4.75	23	58
	lbs/day	2	11	----
Zinc	µg/L	110	620	1640
	lbs/day	52	293	----
Cyanide	µg/L	9	34	85
	lbs/day	4	16	----
Total Chlorine Residual	µg/L	17	68	510
	lbs/day	8	32	241
Ammonia-Nitrogen	µg/L	5,100	20,400	51,000
	lbs/day	2407	9628	----
Chronic Toxicity (See IV.A.2., below)	TUc	----	8.5	----
Phenolic Compounds (non-chlorinated)	µg/L	255	1,020	2,550
	lbs/day	120	481	----
Chlorinated Phenolics	µg/L	8.5	34	85
	lbs/day	4	16	----

b. The pH of the wastes discharged at Discharger Serial 001 shall be at all times within the range of 6.0 to 9.0 pH units.

c. The temperature of wastes discharged shall not exceed the natural temperature of the receiving waters, as measured by the ocean intake water temperature, by more than 20°F.

d. When the total daily average flow of the Huntington Beach Generating Station intake pumps is reduced to less than 126.7 MGD, the total daily discharge flow from the desalination plant including, concentrated seawater, filter backwash water and membrane rinse water, shall not exceed the actual power plant intake pumps daily average flow multiplied by a factor of 0.447. The Discharger shall implement measures to assure that the actual power plant intake pumps daily average flow is monitored and recorded.

e. Waste discharge shall be in a manner that provides sufficient initial dilution to minimize the concentrations of substances not removed in the treatment.

f. Waste discharged to the ocean must be essentially free of:

1) Material that is floatable or will become floatable upon discharge.

2) Settleable material or substances that may form sediments that will degrade benthic communities or other aquatic life.

3) Substances that will accumulate to toxic levels in marine waters, sediments or biota.

4) Substances that significantly decrease the natural light to benthic communities and other marine life.

5) Materials that result in aesthetically undesirable discoloration of the ocean surface.

2. Toxicity Requirements

There shall be no acute or chronic toxicity in the effluent after mixing with ambient seawater in a ratio of 1 to 7.5 nor shall the effluent cause any chronic toxicity in the receiving water. All waters shall be maintained free of toxic substances in concentrations which are toxic to, or which produce detrimental physiological responses in human, plant, animal, or indigenous aquatic life.

a. **Definition of Chronic Toxicity**

The chronic toxicity of the effluent shall be expressed and reported in TUc, where TUc = 100/NOEC. The No Observed Effect Concentration (NOEC) is the highest effluent concentration to which organisms are exposed in a chronic test, that causes no observable adverse effect on the test organisms (e.g., the highest concentration of toxicant to which the values for the observed responses are <u>not</u> statistically significantly different from the controls). In addition, NOEC and IC25/EC25 values in percent effluent shall also be reported. For this discharge, chronic toxicity is defined as an exceedance of the chronic toxicity effluent limitation specified in Discharge Specification A.1.a.

b. The Discharger shall conduct chronic toxicity monitoring of discharges, as specified in Attachment E - Monitoring and Reporting Program (M&RP).

c. The Discharger shall develop and submit to the Regional Board an Initial Investigation Toxicity Reduction Evaluation (IITRE) work plan [approximately 1-2 pages] within 90 days of the effective date of this permit. This workplan shall describe the steps the Discharger intends to follow if required by Toxicity Requirement No. 2.a.3), below. The work plan shall include at a minimum:

1) A description of the investigation and evaluation techniques that will be used to identify potential causes/sources of the exceedance, effluent variability, and/or efficiency of the treatment system in removing toxic substances. This shall include a description of an accelerated chronic toxicity testing program.

2) A description of the methods to be used for investigating and maximizing in-house treatment efficiency and good housekeeping practices.

3) A description of the evaluation process to be used to determine if implementation of a more detailed TRE\TIE is necessary.

d. The Discharger shall implement the IITRE work plan whenever the results of chronic toxicity tests of the effluent exceed:

(a) A two month median value of 8.5 TUc for survival or reproduction endpoint or,

(b) Any single test value of 14.5 TUc for survival endpoint.

e. The Discharger shall develop a detailed Toxicity Reduction Evaluation and Toxicity Identification Evaluation (TRE/TIE) work plan that shall describe the steps the Discharger intends to follow if the implemented IITRE fails to identify the cause of, or rectify, the toxicity.

f. The Discharger shall use as guidance, at a minimum, EPA manuals EPA/600/2-88/070 (industrial), EPA/600/4-89-001A (municipal), EPA/600/6-91/005F (Phase I), EPA/600/R-92/080 (Phase II), and EPA-600/R-92/081 (Phase III) to identify the cause(s) of toxicity. If during the life of this Order the aforementioned EPA manuals are revised or updated, the revised/updated manuals may also be used as guidance. The detailed TRE/TIE work plan shall include:

(a) Further actions to investigate and identify the cause of toxicity;

(b) Actions the Discharger will take to mitigate the impact of the discharge and to prevent the recurrence of toxicity; and

(c) A schedule for these actions.

g. The Discharger shall implement the TRE/TIE workplan if the IITRE fails to identify the cause of, or rectify, the toxicity, or if in the opinion of the Executive Officer the IITRE does not adequately address an identified toxicity problem.

h. The Discharger shall assure that adequate resources are available to implement the required TRE/TIE.

B. Land Discharge Specifications: (Not Applicable)

C. Reclamation Specifications: (Not Applicable)

D. Storm Water Requirements:

1. Storm water[6] discharges shall not:

   a. Cause or contribute to a violation of any applicable water quality standards contained in the Basin Plan, or in the State or Federal regulations.

   b. Cause or threaten to cause pollution, contamination, or nuisance.

   c. Contain a hazardous substance equal to or in excess of a reportable quantity listed in 40 CFR Part 117 and/or 40 CFR Part 302.

   d. Adversely impact human health or the environment.

   e. Result in noncompliance with the lawful requirements of municipalities, counties, drainage districts, and other local agencies on storm water discharges into storm drain systems or other courses under their jurisdiction.

2. The Discharger must update and implement the Storm Water Pollution Prevention Plan for the Facility in accordance with Attachment "J" of this Order.

V. RECEIVING WATER LIMITATIONS

A. Surface Water Limitations

1. Receiving water limitations are based upon water quality objectives contained in the Ocean Plan. As such, they are a required part of this Order. The discharge shall not cause the following in the Pacific Ocean:

   a. <u>Thermal Characteristics</u>

      1) Temperature increases in the natural water by more than 4°F at (a) the shoreline, (b) the surface of any ocean substrate, or (c) the ocean surface beyond 1,000 feet from the discharge system. The surface temperature limitation shall be maintained at least 50 percent of the duration of any complete tidal cycle.

      2) The maximum discharge temperature shall not exceed the natural temperature of receiving waters by more than 20°F.

      3) The discharge shall occur at a sufficient distance from the areas of special biological significance to assure the maintenance of natural temperature in these areas.

---

6 Storm water means storm water runoff and surface runoff and drainage.

4) The discharge shall occur away from the shoreline to achieve dispersion through the vertical water column.

b. Physical Characteristics

1) Floating particulates and grease and oil shall not be visible.

2) The discharge of waste shall not cause aesthetically undesirable discoloration of the ocean surface.

3) Natural light shall not be significantly reduced at any point outside the initial dilution zone as the result of the discharge of waste.

4) The rate of deposition of inert solids and the characteristics of inert solids in ocean sediments shall not be changed such that benthic communities are degraded.

c. Chemical Characteristics

1) The dissolved oxygen concentration shall not at any time be depressed more than 10 percent from that which occurs naturally, as the result of the discharge of oxygen demanding waste materials.

2) The pH shall not be changed at any time more than 0.2 units from that which occurs naturally.

3) The dissolved sulfide concentration of waters in and near sediments shall not be significantly increased above that present under natural conditions.

4) The concentration of substances set forth in Chapter II, Table B, in marine sediments shall not be increased to levels which would degrade indigenous biota.

5) The concentration of organic materials in marine sediments shall not be increased to levels which would degrade marine life.

6) Nutrient materials shall not cause objectionable aquatic growths or degrade indigenous biota.

d. Biological Characteristics

1) Marine communities, including vertebrate, invertebrate, and plant species shall not be degraded.

2) The natural taste, odor, and color of fish, shellfish, or other marine resources used for human consumption shall not be altered.

3) The concentration of organic materials in fish, shellfish or other marine resources used for human consumption shall not bioaccumulate to levels that are harmful to human health.

e. Radioactivity

Discharge of radioactive waste, which meets the definition of "pollutant" at 40 CFR 122.2, shall not degrade marine life.

2. Pollutants not specifically mentioned and limited in this Order shall not be discharged at levels that will bioaccumulate in aquatic resources to levels which are harmful to human health.

B. Groundwater Limitations (Not Applicable)

VI. PROVISIONS

A. Standard Provisions

1. **Standard Provisions.** The Discharger shall comply with all Standard Provisions included in Attachment D of this Order.

2. **Regional Water Board Standard Provisions.** The Discharger shall comply with the following provisions:

   a. Neither the treatment nor the discharge of waste shall create, or threaten to create, a nuisance or pollution as defined by Section 13050 of the California Water Code.

   b. This Order is not transferable to any person except after notice to and approval by the Executive Officer. The Executive Officer may require modification or revocation and reissuance of this Order to change the name of the Discharger and incorporate such other requirements as may be necessary under the Clean Water Act.

   c. The Discharger shall submit a report of waste discharge 180 days before using source water(s) for desalination other than the Huntington Beach Generating Station cooling water discharge.

   d. The Discharger shall maintain a copy of this Order at the site so that it is available to site operating personnel at all times. Key operating personnel shall be familiar with its content.

e. The Discharger shall comply with all of the terms, requirements and conditions of this Order. Any violation of this Order constitutes a violation of the California Water Code and may constitute a violation of the Clean Water Act and its regulations, and is grounds for enforcement action, termination of the Order, revocation and reissuance of the Order, denial of an application for reissuance of the Order; or a combination thereof.

f. The Discharger shall furnish, within a reasonable time, any information the Regional Board or EPA may request to determine whether cause exists for modifying, revoking and reissuing, or terminating this Order. The Discharger shall also furnish to the Regional Board, upon request, copies of records required to be kept by this Order.

g. The Discharger shall file with the Regional Board a new report of waste discharge as soon as possible but no later than 90 days after notification that the source water from the AES facility will no longer be available and/or when other changes to the nature of the source water will occur. Should source water from the AES Facility cease to be available, the Discharger shall not extract ocean water for use at the Facility unless approved by the Regional Board.

h. The Discharger shall give advance notice to the Regional Board as soon as possible of any planned physical alterations or additions to the permitted facility.

i. The Discharger shall take all reasonable steps to minimize or prevent any discharge that has a reasonable likelihood of adversely affecting human health or the environment.

j. The Discharger shall, at all times, properly operate and maintain all facilities and systems of treatment and control including disposal facilities, and related appurtenances which are installed or used by the Discharger to achieve compliance with this Order. Proper operation and maintenance also includes adequate laboratory controls, appropriate quality assurance procedures, effective performance, adequate funding, adequate staffing and training and adequate process controls. This provision requires the operation of back up or auxiliary facilities or similar systems which are installed by a Discharger only when the operation is necessary to achieve compliance with the conditions of the Order.

k. The requirements prescribed herein do not authorize the commission of any act causing injury to the property of another, nor protect the Discharger from his liabilities under federal, state, or local laws, nor guarantee the Discharger a capacity right in the receiving waters.

l. Bypass (the intentional diversion of waste streams from any portion of a treatment facility) is prohibited unless it is permitted under the terms of this Order. The Regional Board may take enforcement action against the Discharger for unpermitted bypass unless:

1. Bypass was unavoidable to prevent loss of life, personal injury, or severe property damage. (Severe property damage means substantial physical damage to property, damage to the treatment facilities that causes them to become inoperable, or substantial and permanent loss of natural resources that can reasonably be expected to occur in the absence of a bypass. Severe property damage does not mean economic loss caused by delays in production.);

2. There were no feasible alternative to bypass, such as the use of auxiliary treatment facilities, retention of untreated waste, or maintenance during normal periods of equipment down time. This condition is not satisfied if adequate back-up equipment should have been installed in the exercise of reasonable engineering judgment to prevent a bypass that could occur during normal periods of equipment down time or preventive maintenance; and

3. The Discharger submitted a notice at least ten days in advance of the need for a bypass to the appropriate Regional Board. The Discharger may allow a bypass to occur that does not cause effluent limitations to be exceeded, but only if it is for essential maintenance to assure efficient operation. In such a case, the above bypass conditions are not applicable. The Discharger shall promptly notify the Regional Board and the EPA within 24 hours of each such bypass.

m. It shall not be a defense for the Discharger in an enforcement action that it would have been necessary to halt or reduce the permitted activity in order to maintain compliance with the conditions of this Order.

n. The Discharger shall take all reasonable steps to minimize any adverse impact to receiving waters resulting from noncompliance with any requirements specified in this Order, including such accelerated or additional monitoring as necessary to determine the nature and impact of the noncomplying discharge.

o. The provisions of this Order are severable, and if any provision of this Order, or the application of any provisions of this Order to any circumstance, is held invalid, the application of such provision to other circumstances, and the remainder of this Order shall not be affected thereby.

p. Collected screenings, sludge, and other solids removed from liquid wastes shall be disposed of in a manner approved by the Regional Water Board's Executive Officer.

q. In the event of any change in control or ownership of land or waste discharge facility presently owned or controlled by the Discharger, the Discharger shall notify the succeeding owner or operator of the existence of this Order by letter, a copy of which shall be forwarded to the Regional Water Board.

B. Monitoring and Reporting Program Requirements

The Discharger shall comply with the Monitoring and Reporting Program, and future revisions thereto, in Attachment E of this Order. This monitoring and reporting program may be modified by the Executive Officer at any time during the term of this Order, and may include an increase in the number of parameters to be monitored, the frequency of the monitoring or the number and size of samples to be collected. Any increase in the number of parameters to be monitored, the frequency of the monitoring or the number and size of samples to be collected may be reduced back to the levels specified in the original monitoring and reporting program at the discretion of the Executive Officer.

C. Special Provisions

1. Reopener Provisions

   a. This Order may be reopened to address any changes in State or federal plans, policies or regulations that would affect the quality requirements for the discharges.

   b. This Order may be reopened to include effluent limitations for pollutants determined to be present in the discharge in concentrations that pose a reasonable potential to cause or contribute to violations of water quality objectives.

   c. This Order may be reopened and modified in accordance with the requirements set forth at 40 CFR 122 and 124, to include the appropriate conditions or limits to address demonstrated effluent toxicity based on newly available information, or to implement any EPA-approved new State water quality standards applicable to effluent toxicity.

   d. This Order may be modified, revoked and reissued, or terminated for cause. The filing of a request by the Discharger for modification, revocation and reissuance, or termination of this Order or a notification of planned changes or anticipated noncompliance does not stay any permit condition.

   e. This Order will be reopened to address physical or operational alterations to the permitted facility that would affect the requirements for discharges from the facility.

2. Special Studies, Technical Reports and Additional Monitoring requirements

   See Sections IV.A.2.c. and IV.A.2.d., above

3. Best Management Practices and Pollution Prevention

a. The Discharger shall develop and conduct a Pollutant Minimization Program (PMP) when there is evidence that the pollutant is present in the effluent above an effluent limitation (e.g., sample results reported as detected but not quantified (DNQ) when the effluent limitation is less than the MDL, sample results from analytical methods more sensitive than those methods included in the permit, presence of whole effluent toxicity, health advisories for fish consumption, results of benthic or aquatic organism tissue sampling) and either: (i) A sample result is reported as DNQ and the effluent limitation is less than the reported ML; or (ii) A sample result is reported as ND and the effluent limitation is less than the MDL. The PMP shall include, but not be limited to, the following actions and submittals acceptable to the Regional Water Board:

(1) An annual review and semi-annual monitoring of potential sources of the reportable pollutant(s), which may include fish tissue monitoring and other bio-uptake sampling;
(2) Quarterly monitoring for the reportable pollutant(s) in the influent to the wastewater treatment system;
(3) Submittal of a control strategy designed to proceed toward the goal of maintaining concentrations of the reportable pollutant(s) in the effluent at or below the effluent limitation;
(4) Implementation of appropriate cost-effective control measures for the reportable pollutant(s), consistent with the control strategy; and
(5) An annual status report that shall be sent to the Regional Water Board including:
    (a) All PMP monitoring results for the previous year;
    (b) A list of potential sources of the reportable pollutant(s);
    (c) A summary of all actions undertaken pursuant to the control strategy; and
    (d) A description of actions to be taken in the following year.

b. The Board shall be notified immediately by telephone or facsimile of the presence of detrimental conditions in the receiving waters or on beaches and shores resulting from the discharge; written confirmation shall follow within two weeks.

c. The discharge of polychlorinated biphenyl (PCB) compounds, such as those used for transformer fluid, is prohibited. The Discharger shall notify the Executive Officer by telephone or facsimile as soon as the Discharger or his agents have knowledge of any incident of leakage or failure containing or involving the use of polychlorinated biphenyls. This information shall be confirmed in writing within two weeks.

d. Stormwater Pollution Prevention Plan - The Discharger must develop and implement the Storm Water Pollution Prevention Plan for the treatment facility in accordance with Attachment "J" of this Order.

e. Best Management Practices Plan. The Discharger shall develop, notify the Regional Water Board of completion, and implement within 90 days before start-up of operation, a Best Management Practices Plan (BMPP). If necessary, the plan, or any existing plan, shall be updated to address any changes in operation and/or management of the facility. Notification that a plan has been updated shall be submitted to the Regional Water Board within 30 days of revision.

   The BMPP shall be consistent with the general guidance contained in the EPA *Guidance Manual for Developing Best Management Practices (BMPs)* (EPA 833-B-93-004). In particular, a risk assessment of each area identified by the Discharger shall be performed to determine the potential for hazardous or toxic waste/material discharge to surface waters.

4. Construction, Operation and Maintenance Specifications

   The Discharger shall develop an "Operation and Maintenance Manual (O&M Manual)". If an O&M Manual has been developed, the Discharger shall update it as necessary to conform with latest plant changes and requirements. The O&M Manual shall be readily available to operating personnel onsite. The O&M Manual shall include the following:

   1. Detailed description of safe and effective operation and maintenance of treatment processes, process control instrumentation and equipment.

   2. Description of laboratory and quality assurance procedures.

   3. Process and equipment inspection and maintenance schedules,

   4. Description of safeguards to assure that, should there be reduction, loss, or failure of electric power, the Discharger will be able to comply with the terms and conditions of this Order.

   5. Description of preventive (fail-safe) and contingency (cleanup) plans for controlling accidental discharges, and for minimizing the effect of such events. These plans shall identify the possible sources (such as loading and storage areas, power outage, waste treatment unit failure, process equipment failure, tank and piping failure) of accidental discharges, untreated or partially treated waste bypass, and polluted drainage.

5. Special Provisions for Municipal Facilities (POTWs Only) - Not Applicable

6. Other Special Provisions Not Applicable

7. Compliance Schedules Not Applicable

VII. COMPLIANCE DETERMINATION

Compliance with the effluent limitations contained in Section IV of this Order will be determined as specified below:

A. General.

Compliance with effluent limitations for reportable pollutants shall be determined using sample reporting protocols defined in the MRP (Attachment E) of this Order. The Discharger shall be deemed out of compliance with effluent limitations if the concentration of the monitoring sample is greater than the effluent limitation and greater than or equal to the reported Minimum Level (ML).

B. Multiple Sample Data Reduction.

When determining compliance with a measure of central tendency (arithmetic mean, geometric mean, median, etc.) of multiple sample analyses and the data set contains one or more reported determinations of "Detected, but Not Quantified" (DNQ) or "Not Detected" (ND). In those cases, the Discharger shall compute the median in place of the arithmetic mean in accordance with the following procedure:

1. The data set shall be ranked from low to high, ranking the reported ND determinations lowest, DNQ determinations next, followed by quantified values (if any). The order of the individual ND or DNQ determinations is unimportant.

2. The median value of the data set shall be determined. If the data set has an odd number of data points, then the median is the middle value. If the data set has an even number of data points, then the median is the average of the two values around the middle unless one or both of the points are ND or DNQ, in which case the median value shall be the lower of the two data points where DNQ is lower than a value and ND is lower than DNQ.

C. Average Monthly Effluent Limitation (AMEL) - Not Applicable

D. Average Weekly Effluent Limitation (AWEL) - Not Applicable

E. Maximum Daily Effluent Limitation (MDEL).

If a daily discharge exceeds the MDEL for a given parameter, an alleged violation will be flagged and the Discharger will be considered out of compliance for that parameter for that 1 day only within the reporting period. For any 1 day during which no sample is taken, no compliance determination can be made for that day.

F. Instantaneous Minimum Effluent Limitation - Not Applicable

G. Instantaneous Maximum Effluent Limitation.

If the analytical result of a single grab sample is higher than the instantaneous maximum effluent limitation for a parameter, a violation will be flagged and the Discharger will be considered out of compliance for that parameter for that single sample. Non-compliance for each sample will be considered separately (e.g., the results of two grab samples taken within a calendar day that both exceed the instantaneous maximum effluent limitation would result in two instances of non-compliance with the instantaneous maximum effluent limitation).

H. Six-month Median Effluent Limitation.

If the median of daily discharges over any 180-day period exceeds the six-month median effluent limitation for a given parameter, an alleged violation will be flagged and the Discharger will be considered out of compliance for each day of that 180-day period for that parameter. The next assessment of compliance will occur after the next sample is taken. If only a single sample is taken during a given 180-day period and the analytical result for that sample exceeds the six-month median, the Discharger will be considered out of compliance for the 180-day period. For any 180-day period during which no sample is taken, no compliance determination can be made for the six-month median limitation.

I. Pursuant to 40 CFR 401.17, the Discharger shall be in compliance with the pH limitation specified in Discharge Specification IV.A.1.d., above, provided that both of the following conditions are satisfied:

2. The total time during which the pH values are outside the required range of 6-9 pH values shall not exceed 7 hours and 26 minutes in any calendar month; and

3. No individual excursion from the range of pH values shall exceed 60 minutes.

ATTACHMENT A – DEFINITIONS

Acute Toxicity:

Acute Toxicity (TUa)
Expressed in Toxic Units Acute (TUa)

$$TUa = \frac{100}{\text{96-hr LC}_{50\%}}$$

Lethal Concentration 50% (LC 50)
LC 50 (percent waste giving 50% survival of test organisms) shall be determined by static or continuous flow bioassay techniques using standard marine test species as specified in Appendix III, Chapter II. If specific identifiable substances in wastewater can be demonstrated by the discharger as being rapidly rendered harmless upon discharge to the marine environment, but not as a result of dilution, the LC 50 may be determined after the test samples are adjusted to remove the influence of those substances.

When it is not possible to measure the 96-hour LC 50 due to greater than 50 percent survival of the test species in 100 percent waste, the toxicity concentration shall be calculated by the expression:

$$TUa = \frac{\log (100 - S)}{1.7}$$

where:

S = percentage survival in 100% waste. If S > 99, TUa shall be reported as zero.

Areas of Special Biological Significance (ASBS): are those areas designated by the State Water Board as ocean areas requiring protection of species or biological communities to the extent that alteration of natural water quality is undesirable. All Areas of Special Biological Significance are also classified as a subset of STATE WATER QUALITY PROTECTION AREAS.

Average Monthly Effluent Limitation (AMEL): the highest allowable average of daily discharges over a calendar month, calculated as the sum of all daily discharges measured during a calendar month divided by the number of daily discharges measured during that month.

Chronic Toxicity: This parameter shall be used to measure the acceptability of waters for supporting a healthy marine biota until improved methods are developed to evaluate biological response.

a. Chronic Toxicity (TUc)

Expressed as Toxic Units Chronic (TUc)

$$TUc = \frac{100}{NOEL}$$

b. No Observed Effect Level (NOEL)

The NOEL is expressed as the maximum percent effluent or receiving water that causes no observable effect on a test organism, as determined by the result of a critical life stage toxicity test listed in Appendix II.

Composite Sample. A composite sample is a combination of 24 aliquots of at least 100 mL each collected hourly over 24-hour period. Each individual aliquot must consist of 4 samples taken at 15-minute intervals. The composite must be flow proportional; either the time interval between each aliquot or the volume of each aliquot must be proportional to either the stream flow at the time off sampling or the total stream flow since the collection of the previous aliquot. Aliquots may be collected manually or automatically.

Daily Discharge: Daily Discharge is defined as either: (1) the total mass of the constituent discharged over the calendar day (12:00 am through 11:59 pm) or any 24-hour period that reasonably represents a calendar day for purposes of sampling (as specified in the permit), for a constituent with limitations expressed in units of mass or; (2) the unweighted arithmetic mean measurement of the constituent over the day for a constituent with limitations expressed in other units of measurement (e.g., concentration).

The daily discharge may be determined by the analytical results of a composite sample taken over the course of one day (a calendar day or other 24-hour period defined as a day) or by the arithmetic mean of analytical results from one or more grab samples taken over the course of the day.

For composite sampling, if 1 day is defined as a 24-hour period other than a calendar day, the analytical result for the 24-hour period will be considered as the result for the calendar day in which the 24-hour period ends.

Degrade. Degradation shall be determined by comparison of the waste field and reference site(s) for characteristic species diversity, population density, contamination, growth anomalies, debility, or supplanting of normal species by undesirable plant and animal species. Degradation occurs if there are significant differences in any of three major biotic groups, namely, demersal fish, benthic invertebrates, or attached algae. Other groups may be evaluated where benthic species are not affected, or are not the only ones affected.

Downstream Ocean Waters shall mean waters downstream with respect to ocean currents.

Grab Sample. A grab sample is an individual sample of a t least 100 mLs collected at a randomly selected time over a period not exceeding 15 minutes.

Initial Dilution is the process which results in the rapid and irreversible turbulent mixing of wastewater with ocean water around the point of discharge.

For a submerged buoyant discharge, characteristic of most municipal and industrial wastes that are released from the submarine outfalls, the momentum of the discharge and its initial buoyancy act together to produce turbulent mixing. Initial dilution in this case is completed when the diluting wastewater ceases to rise in the water column and first begins to spread horizontally.

For shallow water submerged discharges, surface discharges, and nonbuoyant discharges, characteristic of cooling water wastes and some individual discharges, turbulent mixing results primarily from the momentum of discharge. Initial dilution, in these cases, is considered to be completed when the momentum induced velocity of the discharge ceases to produce significant mixing of the waste, or the diluting plume reaches a fixed distance from the discharge to be specified by the Regional Board, whichever results in the lower estimate for initial dilution.

Instantaneous Maximum Effluent Limitation: the highest allowable value for any single grab sample or aliquot (i.e., each grab sample or aliquot is independently compared to the instantaneous maximum limitation).

Instantaneous Minimum Effluent Limitation: the lowest allowable value for any single grab sample or aliquot (i.e., each grab sample or aliquot is independently compared to the instantaneous minimum limitation).

Kelp Beds, for purposes of the bacteriological standards of this plan, are significant aggregations of marine algae of the genera Macrocystis and Nereocystis. Kelp beds include the total foliage canopy of Macrocystis and Nereocystis plants throughout the water column.

Mariculture is the culture of plants and animals in marine waters independent of any pollution source.

Material: (a) In common usage: (1) the substance or substances of which a thing is made or composed (2) substantial; (b) For purposes of the California Ocean Plan relating to waste disposal, dredging and the disposal of dredged material and fill, MATERIAL means matter of any kind or description which is subject to regulation as waste, or any material dredged from the navigable waters of the United States. See also, DREDGED MATERIAL.

Maximum Daily Effluent Limitation (MDEL): the highest allowable daily discharge of a pollutant. That shall apply to flow weighted 24-hour composite samples.

MDL (Method Detection Limit) is the minimum concentration of a substance that can be measured and reported with 99% confidence that the analyte concentration is greater than zero, as defined in 40 CFR PART 136 Appendix B.

Minimum Level (ML) is the concentrations at which the entire analytical system must give a recognizable signal and acceptable calibration point. The ML is the concentration in a sample that is equivalent to the concentration of the lowest calibration standard analyzed by a specific analytical procedure, assuming that all the method-specified sarnple weights, volumes and processing steps have been followed.

Natural Light: Reduction of natural light may be determined by the Regional Water Board by measurement of light transmissivity or total irradiance, or both, according to the monitoring needs of the Regional Water Board.

Ocean Waters are the territorial marine waters of the State as defined by California law to the extent these waters are outside of enclosed bays, estuaries, and coastal lagoons. If a discharge outside the territorial waters of the State could affect the quality of the waters of the State, the discharge may be regulated to assure no violation of the California Ocean Plan will occur in ocean waters.

Practical Quantitation Level (PQL) is the lowest concentration of a substance that can be determined within ± 20 percent of the true concentration by 75 percent of the analytical laboratories tested in a performance evaluation study. Alternatively, if performance data are not available, the PQL is the method detection limit (MDL) x 5 for carcinogens and MDL x 10 for noncarcinogens

Shellfish are organisms identified by the California Department of Health Services as shellfish for public health purposes (i.e., mussels, clams and oysters).

Significant Difference is defined as a statistically significant difference in the means of two distributions of sampling results at the 95 percent confidence level.

Six-month Median Effluent Limitation: that apply as a moving median of daily values for any 180-day period in which daily values represent flow weighted average concentrations within a 24-hour period. For intermittent discharges, the daily value shall be considered to equal zero fro days on which no discharge occurred.

Toxicity Reduction Evaluation (TRE) is a study conducted in a step-wise process designed to identify the causative agents of effluent or ambient toxicity, isolate the sources of toxicity, evaluate the effectiveness of toxicity control options, and then confirm the reduction in toxicity. The first steps of the TRE consist of the collection of data relevant to the toxicity, including additional toxicity testing, and an evaluation of facility operations and maintenance practices, and best management practices. A Toxicity Identification Evaluation (TIE) may be required as part of the TRE, if appropriate. (A TIE is a set of procedures to identify the specific chemical(s) responsible for toxicity. These procedures are performed in three phases (characterization, identification, and confirmation) using aquatic organism toxicity tests.)

Waste as used in the California Ocean Plan, waste includes a discharger's total discharge, of whatever origin, i.e., gross, not net, discharge.

ATTACHMENT B – VICINITY MAP

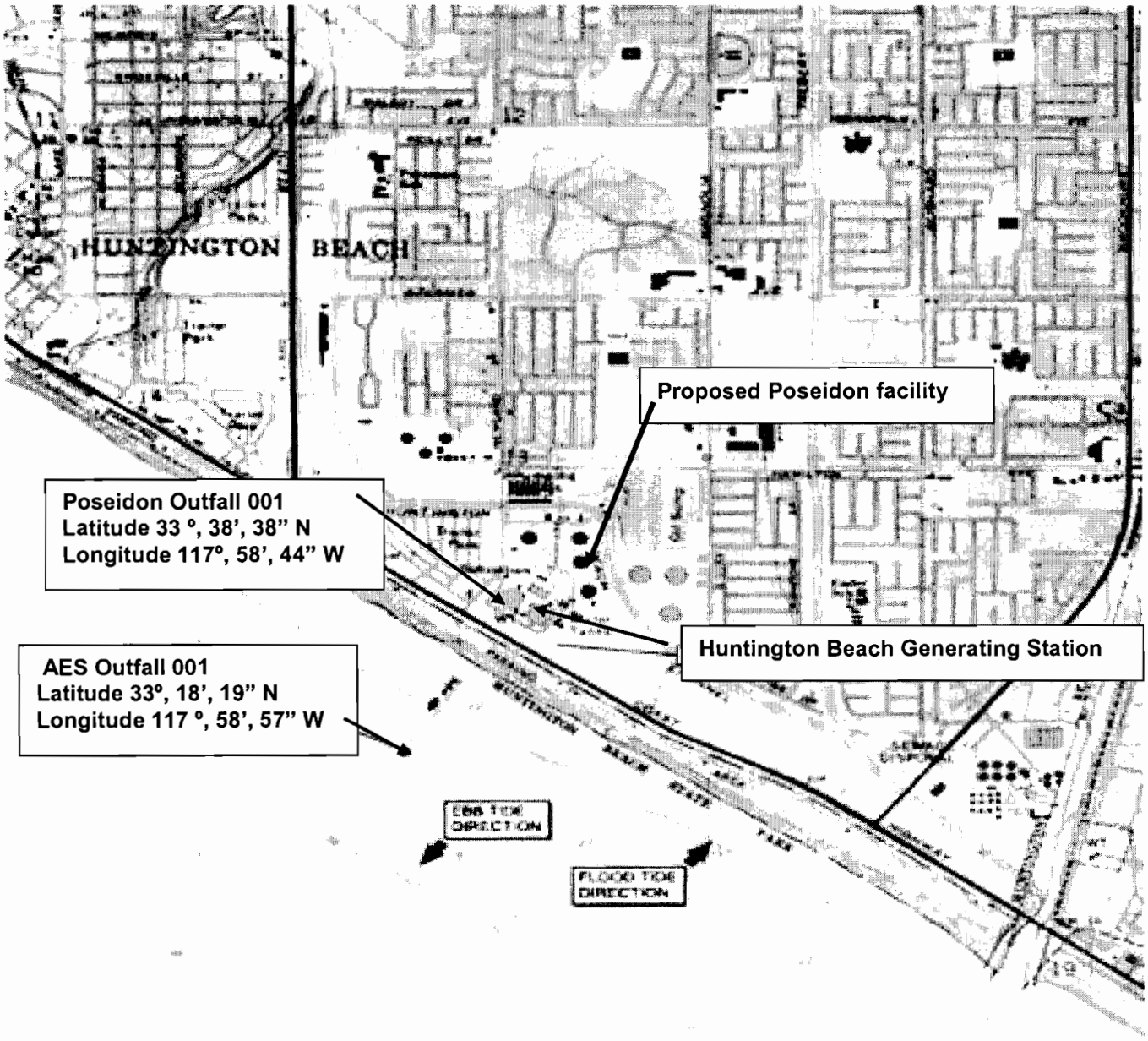

ATTACHMENT C.1 – FLOW SCHEMATIC

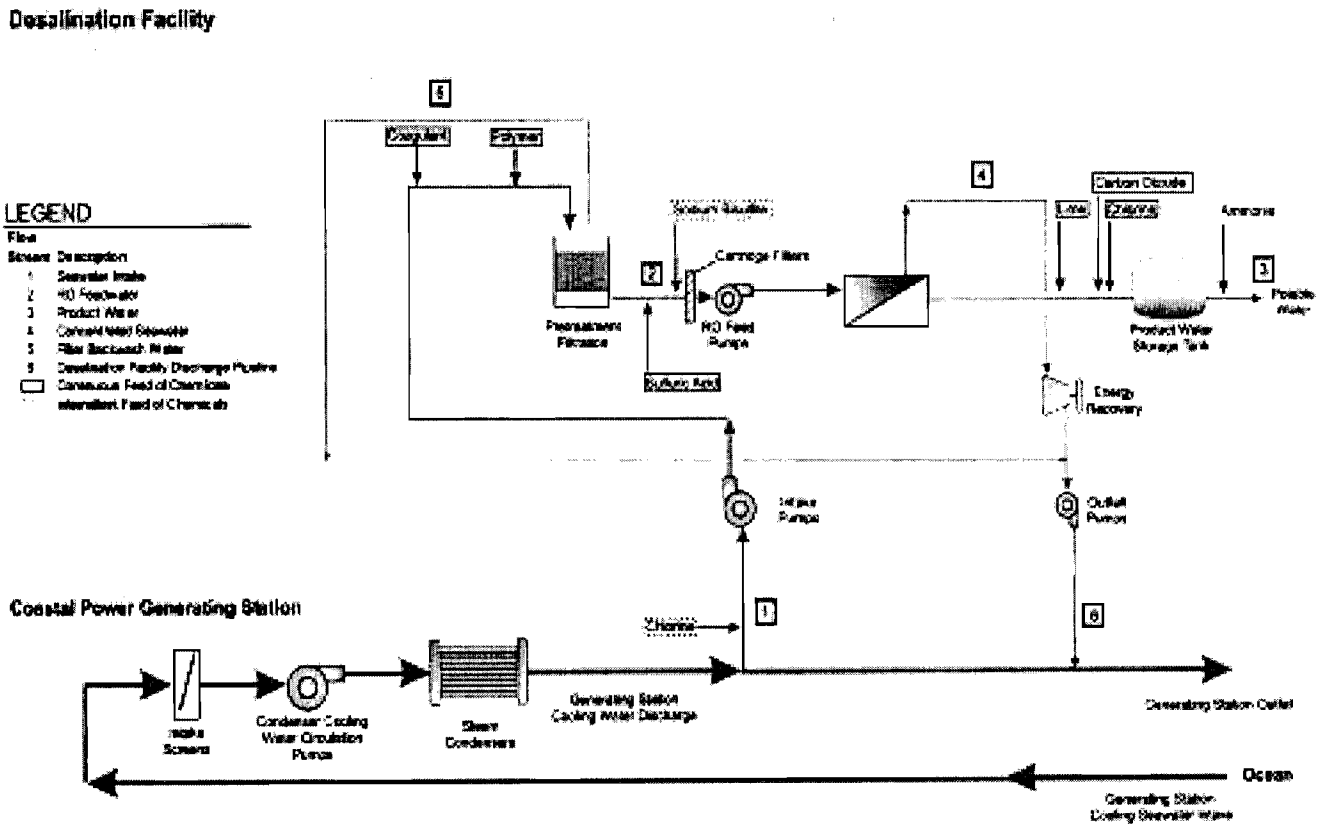

Attachment C.2 – Intake/Discharge Point

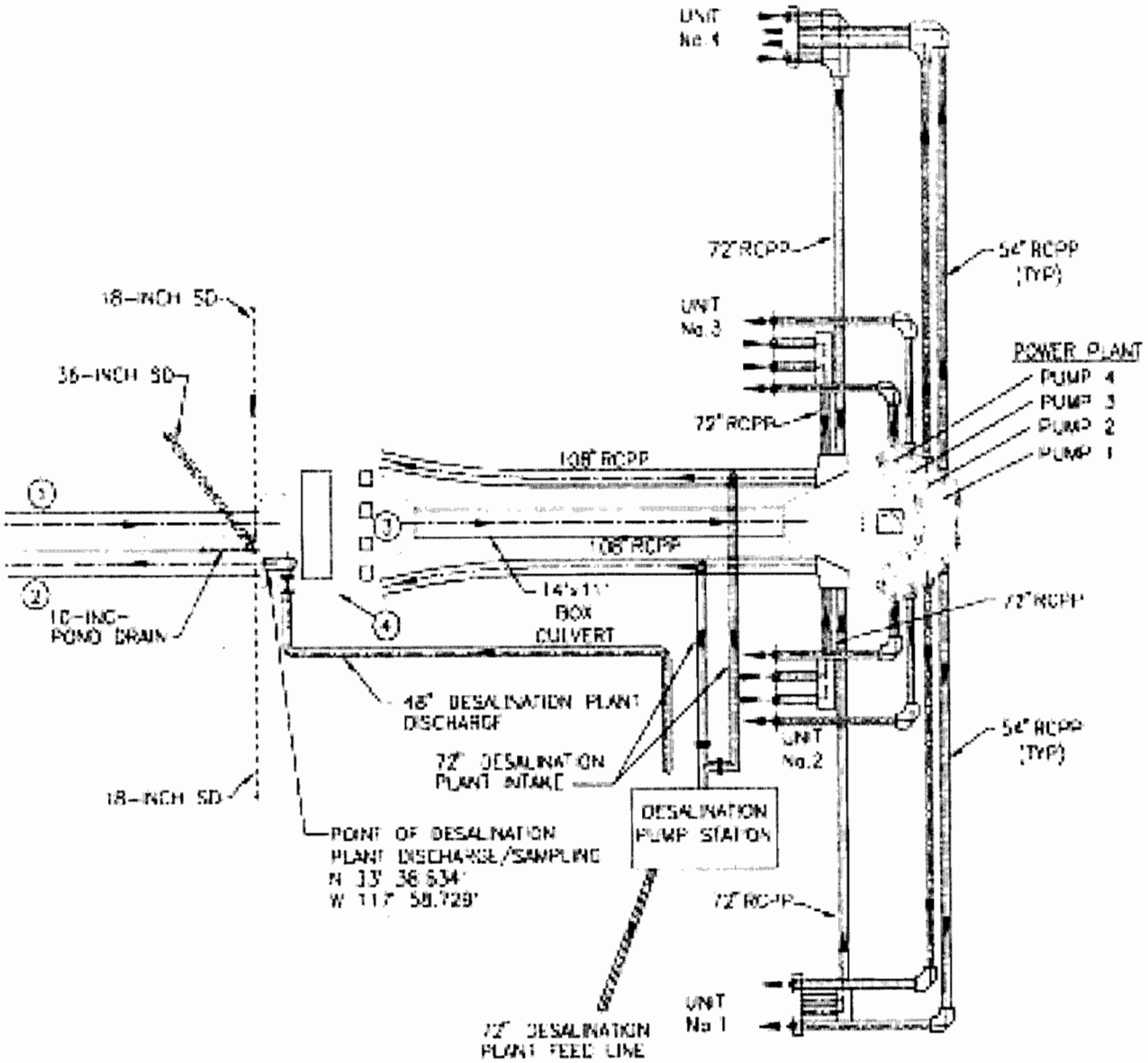

① 168" POWER PLANT INTAKE PIPE

② 168" POWER PLANT OUTFALL

③ POWER PLANT INTAKE/DISCHARGE STRUCTURE

④ DESALINATION PLANT INTAKE WATER QUALITY SAMPLING POINT.

ATTACHMENT D – FEDERAL STANDARD PROVISIONS

I. STANDARD PROVISIONS – PERMIT COMPLIANCE

A. Duty to Comply

1. The Discharger must comply with all of the conditions of this Order. Any noncompliance constitutes a violation of the Clean Water Act (CWA) and the California Water Code (CWC) and is grounds for enforcement action, for permit termination, revocation and reissuance, or denial of a permit renewal application [*40 CFR §122.41(a)*].

2. The Discharger shall comply with effluent standards or prohibitions established under Section 307(a) of the Clean Water Act for toxic pollutants and with standards for sewage sludge use or disposal established under Section 405(d) of the CWA within the time provided in the regulations that establish these standards or prohibitions, even if this Order has not been modified to incorporate the requirement [*40 CFR §122.41(a)(1)*].

B. Need to Halt or Reduce Activity Not a Defense

It shall not be a defense for a Discharger in an enforcement action that it would have been necessary to halt or reduce the permitted activity in order to maintain compliance with the conditions of this Order [*40 CFR §122.41(c)*].

C. Duty to Mitigate

The Discharger shall take all reasonable steps to minimize or prevent any discharge or sludge use or disposal in violation of this Order that has a reasonable likelihood of adversely affecting human health or the environment [*40 CFR §122.41(d)*].

D. Proper Operation and Maintenance

The Discharger shall at all times properly operate and maintain all facilities and systems of treatment and control (and related appurtenances) which are installed or used by the Discharger to achieve compliance with the conditions of this Order. Proper operation and maintenance also includes adequate laboratory controls and appropriate quality assurance procedures. This provision requires the operation of backup or auxiliary facilities or similar systems that are installed by a Discharger only when necessary to achieve compliance with the conditions of this Order [*40 CFR §122.41(e)*].

E. Property Rights

1. This Order does not convey any property rights of any sort or any exclusive privileges [*40 CFR §122.41(g)*].

2. The issuance of this Order does not authorize any injury to persons or property or invasion of other private rights, or any infringement of State or local law or regulations [*40 CFR §122.5(c)*].

F. Inspection and Entry

The Discharger shall allow the Regional Water Quality Control Board (RWQCB), State Water Resources Control Board (SWRCB), United States Environmental Protection Agency (USEPA), and/or their authorized representatives (including an authorized contractor acting as their representative), upon the presentation of credentials and other documents, as may be required by law, to [*40 CFR §122.41(i)*] [*CWC 13383(c)*]:

1. Enter upon the Discharger's premises where a regulated facility or activity is located or conducted, or where records are kept under the conditions of this Order [*40 CFR §122.41(i)(1)*];

2. Have access to and copy, at reasonable times, any records that must be kept under the conditions of this Order [*40 CFR §122.41(i)(2)*];

3. Inspect and photograph, at reasonable times, any facilities, equipment (including monitoring and control equipment), practices, or operations regulated or required under this Order [*40 CFR §122.41(i)(3)*];

4. Sample or monitor, at reasonable times, for the purposes of assuring Order compliance or as otherwise authorized by the CWA or the CWC, any substances or parameters at any location [*40 CFR §122.41(i)(4)*].

G. Bypass

1. Definitions

   a. "Bypass" means the intentional diversion of waste streams from any portion of a treatment facility [*40 CFR §122.41(m)(1)(i)*].

   b. "Severe property damage" means substantial physical damage to property, damage to the treatment facilities, which causes them to become inoperable, or substantial and permanent loss of natural resources that can reasonably be expected to occur in the absence of a bypass. Severe property damage does not mean economic loss caused by delays in production [*40 CFR §122.41(m)(1)(ii)*].

2. Bypass not exceeding limitations – The Discharger may allow any bypass to occur which does not cause exceedances of effluent limitations, but only if it is for essential maintenance to assure efficient operation. These bypasses are not subject to the provisions listed in Standard Provisions – Permit Compliance I.G.3 and I.G.5 below [*40 CFR §122.41(m)(2)*].

3. Prohibition of bypass – Bypass is prohibited, and the Regional Water Board may take enforcement action against a Discharger for bypass, unless [*40 CFR §122.41(m)(4)(i)*]:

   a. Bypass was unavoidable to prevent loss of life, personal injury, or severe property damage [*40 CFR §122.41(m)(4)(A)*];

   b. There were no feasible alternatives to the bypass, such as the use of auxiliary treatment facilities, retention of untreated wastes, or maintenance during normal periods of equipment downtime. This condition is not satisfied if adequate back-up equipment should have been installed in the exercise of reasonable engineering judgment to prevent a bypass that occurred during normal periods of equipment downtime or preventive maintenance [*40 CFR §122.41(m)(4)(B)*]; and

   c. The Discharger submitted notice to the Regional Water Board as required under Standard Provision – Permit Compliance I.G.5 below [*40 CFR §122.41(m)(4)(C)*].

4. The Regional Water Board may approve an anticipated bypass, after considering its adverse effects, if the Regional Water Board determines that it will meet the three conditions listed in Standard Provisions – Permit Compliance I.G.3 above [*40 CFR §122.41(m)(4)(ii)*].

5. Notice

   a. Anticipated bypass. If the Discharger knows in advance of the need for a bypass, it shall submit a notice, if possible at least 10 days before the date of the bypass [*40 CFR §122.41(m)(3)(i)*].

   b. Unanticipated bypass. The Discharger shall submit notice of an unanticipated bypass as required in Standard Provisions - Reporting V.E below [*40 CFR §122.41(m)(3)(ii)*].

B. Duty to Reapply

If the Discharger wishes to continue an activity regulated by this Order after the expiration date of this Order, the Discharger must apply for and obtain a new permit [*40 CFR §122.41(b)*].

C. Transfers

This Order is not transferable to any person except after notice to the Regional Water Board. The Regional Water Board may require modification or revocation and reissuance of the Order to change the name of the Discharger and incorporate such other requirements as may be necessary under the CWA and the CWC [*40 CFR §122.41(l)(3)*] [*40 CFR §122.61*].

III. STANDARD PROVISIONS – MONITORING

A. Samples and measurements taken for the purpose of monitoring shall be representative of the monitored activity [*40 CFR §122.41(j)(1)*].

B. Monitoring results must be conducted according to test procedures under 40 CFR Part 136 or, in the case of sludge use or disposal, approved under 40 CFR Part 136 unless otherwise specified in 40 CFR Part 503 unless other test procedures have been specified in this Order [*40 CFR §122.41(j)(4)*] [*40 CFR §122.44(i)(1)(iv)*].

IV. STANDARD PROVISIONS – RECORDS

A. Except for records of monitoring information required by this Order related to the Discharger's sewage sludge use and disposal activities, which shall be retained for a period of at least five years (or longer as required by 40 CFR Part 503), the Discharger shall retain records of all monitoring information, including all calibration and maintenance records and all original strip chart recordings for continuous monitoring instrumentation, copies of all reports required by this Order, and records of all data used to complete the application for this Order, for a period of at least three (3) years from the date of the sample, measurement, report or application. This period may be extended by request of the Regional Water Board Executive Officer at any time [*40 CFR §122.41(j)(2)*].

B. Records of monitoring information shall include:

1. The date, exact place, and time of sampling or measurements [*40 CFR §122.41(j)(3)(i)*];

2. The individual(s) who performed the sampling or measurements [*40 CFR §122.41(j)(3)(ii)*];

3. The date(s) analyses were performed [*40 CFR §122.41(j)(3)(iii)*];

4. The individual(s) who performed the analyses [*40 CFR §122.41(j)(3)(iv)*];

5. The analytical techniques or methods used [*40 CFR §122.41(j)(3)(v)*]; and

6. The results of such analyses [*40 CFR §122.41(j)(3)(vi)*].

C. Claims of confidentiality for the following information will be denied [*40 CFR §122.7(b)*]:

1. The name and address of any permit applicant or Discharger [*40 CFR §122.7(b)(1)*]; and

2. Permit applications and attachments, permits and effluent data [*40 CFR §122.7(b)(2)*].

V. STANDARD PROVISIONS – REPORTING

A. Duty to Provide Information

The Discharger shall furnish to the Regional Water Board, SWRCB, or USEPA within a reasonable time, any information which the Regional Water Board, SWRCB, or USEPA may request to determine whether cause exists for modifying, revoking and reissuing, or terminating this Order or to determine compliance with this Order. Upon request, the Discharger shall also furnish to the Regional Water Board, SWRCB, or USEPA copies of records required to be kept by this Order [*40 CFR §122.41(h)*] [*CWC 13267*].

B. Signatory and Certification Requirements

1. All applications, reports, or information submitted to the Regional Water Board, SWRCB, and/or USEPA shall be signed and certified in accordance with paragraph (2.) and (3.) of this provision [*40 CFR §122.41(k)*].

2. All permit applications shall be signed as follows:

   a. For a corporation: By a responsible corporate officer. For the purpose of this section, a responsible corporate officer means: (i) A president, secretary, treasurer, or vice-president of the corporation in charge of a principal business function, or any other person who performs sirnilar policy- or decision-making functions for the corporation, or (ii) the manager of one or more manufacturing, production, or operating facilities, provided, the manager is authorized to make management decisions which govern the operation of the regulated facility including having the explicit or implicit duty of making major capital investment recommendations, and initiating and directing other comprehensive measures

to assure long term environmental compliance with environmental laws and regulations; the manager can ensure that the necessary systems are established or actions taken to gather complete and accurate information for permit application requirements; and where authority to sign documents has been assigned or delegated to the manager in accordance with corporate procedures [*40 CFR §122.22(a)(1)*];

b. For a partnership or sole proprietorship: by a general partner or the proprietor, respectively [*40 CFR §122.22(a)(2)*]; or

c. For a municipality, State, federal, or other public agency: by either a principal executive officer or ranking elected official. For purposes of this provision, a principal executive officer of a federal agency includes: (i) the chief executive officer of the agency, or (ii) a senior executive officer having responsibility for the overall operations of a principal geographic unit of the agency (e.g., Regional Administrators of USEPA) [*40 CFR §122.22(a)(3)*].

3. All reports required by this Order and other information requested by the Regional Water Board, SWRCB, or USEPA shall be signed by a person described in paragraph (b) of this provision, or by a duly authorized representative of that person. A person is a duly authorized representative only if:

   a. The authorization is made in writing by a person described in paragraph (2.) of this provision [*40 CFR §122.22(b)(1)*];

   b. The authorization specified either an individual or a position having responsibility for the overall operation of the regulated facility or activity such as the position of plant manager, operator of a well or a well field, superintendent, position of equivalent responsibility, or an individual or position having overall responsibility for environmental matters for the company (a duly authorized representative may thus be either a named individual or any individual occupying a named position) [*40 CFR §122.22(b)(2)*]; and

   c. The written authorization is submitted to the Regional Water Board, SWRCB, or USEPA [*40 CFR §122.22(b)(3)*].

4. If an authorization under paragraph (3.) of this provision is no longer accurate because a different individual or position has responsibility for the overall operation of the facility, a new authorization satisfying the requirements of paragraph (3.) of this provision must be submitted to the Regional Water Board, SWRCB or USEPA prior to or together with any reports, information, or applications, to be signed by an authorized representative [40 CFR §122.22(c)].

5. Any person signing a document under paragraph (2.) or (3.) of this provision shall make the following certification:

"I certify under penalty of law that this document and all attachments were prepared under my direction or supervision in accordance with a system designed to assure that qualified personnel properly gather and evaluate the information submitted. Based on my inquiry of the person or persons who manage the system or those persons directly responsible for gathering the information, the information submitted is, to the best of my knowledge and belief, true, accurate, and complete. I am aware that there are significant penalties for submitting false information, including the possibility of fine and imprisonment for knowing violations" [*40 CFR §122.22(d)*].

C. Monitoring Reports

1. Monitoring results shall be reported at the intervals specified in the Monitoring and Reporting Program in this Order [*40 CFR §122.41(l)(4)*].

2. Monitoring results must be reported on a Discharge Monitoring Report (DMR) form or forms provided or specified by the Regional Water Board or SWRCB for reporting results of monitoring of sludge use or disposal practices [*40 CFR §122.41(l)(4)(i)*].

3. If the Discharger monitors any pollutant more frequently than required by this Order using test procedures approved under 40 CFR Part 136 or, in the case of sludge use or disposal, approved under 40 CFR Part 136 unless otherwise specified in 40 CFR Part 503, or as specified in this Order, the results of this monitoring shall be included in the calculation and reporting of the data submitted in the DMR or sludge reporting form specified by the Regional Water Board [*40 CFR §122.41(l)(4)(ii)*].

4. Calculations for all limitations, which require averaging of measurements, shall utilize an arithmetic mean unless otherwise specified in this Order [*40 CFR §122.41(l)(4)(iii)*].

D. Compliance Schedules

Reports of compliance or noncompliance with, or any progress reports on, interim and final requirements contained in any compliance schedule of this Order, shall be submitted no later than 14 days following each schedule date [*40 CFR §122.41(l)(5)*].

E. Twenty-Four Hour Reporting

1. The Discharger shall report any noncompliance that may endanger health or the environment. Any information shall be provided orally within 24 hours from the time the Discharger becomes aware of the circumstances. A written submission shall also be provided within five (5) days of the time the Discharger becomes aware of the circumstances. The written submission shall contain a description of the noncompliance and its cause; the period of noncompliance, including exact dates and times, and if the noncompliance has not been corrected, the anticipated time it is expected to continue; and steps taken or planned to reduce, eliminate, and prevent reoccurrence of the noncompliance [*40 CFR §122.41(l)(6)(i)*].

2. The following shall be included as information that must be reported within 24 hours under this paragraph [*40 CFR §122.41(l)(6)(ii)*]:

   a. Any unanticipated bypass that exceeds any effluent limitation in this Order [*40 CFR §122.41(l)(6)(ii)(A)*].

   b. Any upset that exceeds any effluent limitation in this Order [*40 CFR §122.41(l)(6)(ii)(B)*].

   c. Violation of a maximum daily discharge limitation for any of the pollutants listed in this Order to be reported within 24 hours [*40 CFR §122.41(l)(6)(ii)(C)*].

3. The Regional Water Board may waive the above-required written report under this provision on a case-by-case basis if an oral report has been received within 24 hours [*40 CFR §122.41(l)(6)(iii)*].

F. Planned Changes

The Discharger shall give notice to the Regional Water Board as soon as possible of any planned physical alterations or additions to the permitted facility. Notice is required under this provision only when [*40 CFR §122.41(l)(1)*]:

1. The alteration or addition to a permitted facility may meet one of the criteria for determining whether a facility is a new source in 40 CFR §122.29(b) [*40 CFR §122.41(l)(1)(i)*]; or

2. The alteration or addition could significantly change the nature or increase the quantity of pollutants discharged. This notification applies to pollutants which are subject neither to effluent limitations in this Order nor to notification requirements under 40 CFR Part 122.42(a)(1) (see Additional Provisions—Notification Levels VII.A.1) [*40 CFR §122.41(l)(1)(ii)*].

3. The alteration or addition results in a significant change in the Discharger's sludge use or disposal practices, and such alteration, addition, or change may justify the application of permit conditions that are different from or absent in the existing permit, including notification of additional use or disposal sites not reported during the permit application process or not reported pursuant to an approved land application plan [*40 CFR §122.41(l)(1)(iii)*].

G. Anticipated Noncompliance

The Discharger shall give advance notice to the Regional Water Board or SWRCB of any planned changes in the permitted facility or activity that may result in noncompliance with General Order requirements [*40 CFR §122.41(l)(2)].*

H. Other Noncompliance

The Discharger shall report all instances of noncompliance not reported under Standard Provisions – Reporting E.3, E.4, and E.5 at the time monitoring reports are submitted. The reports shall contain the information listed in Standard Provision – Reporting V.E [*40 CFR §122.41(l)(7)*].

I. Other Information

When the Discharger becomes aware that it failed to submit any relevant facts in a permit application, or submitted incorrect information in a permit application or in any report to the Regional Water Board, SWRCB, or USEPA, the Discharger shall promptly submit such facts or information [*40 CFR §122.41(l)(8)*].

VI. STANDARD PROVISIONS – ENFORCEMENT

A. The CWA provides that any person who violates section 301, 302, 306, 307, 308, 318 or 405 of the Act, or any permit condition or limitation implementing any such sections in a permit issued under section 402, or any requirement imposed in a pretreatment program approved under sections 402(a)(3) or 402(b)(8) of the Act, is subject to a civil penalty not to exceed $25,000 per day for each violation. The CWA provides that any person who negligently violates sections 301, 302, 306, 307, 308, 318, or 405 of the Act, or any condition or limitation implementing any of such sections in a permit issued under section 402 of the Act, or any requirement imposed in a pretreatment program approved under section 402(a)(3) or 402(b)(8) of the Act, is subject to criminal penalties of $2,500 to $25,000 per day of violation, or imprisonment of not more than one (1) year, or both. In the case of a second or subsequent conviction for a negligent violation, a person shall be subject to criminal penalties of not more than $50,000 per day of violation, or by imprisonment of not more than two (2) years, or both. Any person who knowingly violates such sections, or such conditions or limitations is subject to criminal penalties of $5,000 to $50,000 per day of violation, or imprisonment for not more than three (3) years, or both. In the case of a second or subsequent

conviction for a knowing violation, a person shall be subject to criminal penalties of not more than $100,000 per day of violation, or imprisonment of not more than six (6) years, or both. Any person who knowingly violates section 301, 302, 303, 306, 307, 308, 318 or 405 of the Act, or any permit condition or limitation implementing any of such sections in a permit issued under section 402 of the Act, and who knows at that time that he thereby places another person in imminent danger of death or serious bodily injury, shall, upon conviction, be subject to a fine of not more than $250,000 or imprisonment of not more than 15 years, or both. In the case of a second or subsequent conviction for a knowing endangerment violation, a person shall be subject to a fine of not more than $500,000 or by imprisonment of not more than 30 years, or both. An organization, as defined in section 309(c)(3)(B)(iii) of the Clean Water Act, shall, upon conviction of violating the imminent danger provision, be subject to a fine of not more than $1,000,000 and can be fined up to $2,000,000 for second or subsequent convictions [*40 CFR §122.41(a)(2)*] [*CWC 13385 and 13387*].

B. Any person may be assessed an administrative penalty by the Regional Water Board for violating section 301, 302, 306, 307, 308, 318 or 405 of this Act, or any permit condition or limitation implementing any of such sections in a permit issued under section 402 of this Act. Administrative penalties for Class I violations are not to exceed $10,000 per violation, with the maximum amount of any Class I penalty assessed not to exceed $25,000. Penalties for Class II violations are not to exceed $10,000 per day for each day during which the violation continues, with the maximum amount of any Class II penalty not to exceed $125,000 [*40 CFR §122.41(a)(3)*].

C. The CWA provides that any person who falsifies, tampers with, or knowingly renders inaccurate any monitoring device or method required to be maintained under this permit shall, upon conviction, be punished by a fine of not more than $10,000, or by imprisonment for not more than 2 years, or both. If a conviction of a person is for a violation committed after a first conviction of such person under this paragraph, punishment is a fine of not more than $20,000 per day of violation, or by imprisonment of not more than 4 years, or both [*40 CFR §122.41(j)(5)*].

D. The CWA provides that any person who knowingly makes any false statement, representation, or certification in any record or other document submitted or required to be maintained under this Order, including monitoring reports or reports of compliance or noncompliance shall, upon conviction, be punished by a fine of not more than $10,000 per violation, or by imprisonment for not more than six months per violation, or by both [*40 CFR §122.41(k)(2)*].

VII. ADDITIONAL PROVISIONS – NOTIFICATION LEVELS

A. Non-Municipal Facilities

Existing manufacturing, commercial, mining, and silvicultural Dischargers shall notify the Regional Water Board as soon as they know or have reason to believe [*40 CFR §122.42(a)*]:

1. That any activity has occurred or will occur that would result in the discharge, on a routine or frequent basis, of any toxic pollutant that is not limited in this Order, if that discharge will exceed the highest of the following "notification levels" [*40 CFR §122.42(a)(1)*]:

    a. 100 micrograms per liter (μg/L) [*40 CFR §122.42(a)(1)(i)*];

    b. 200 μg/L for acrolein and acrylonitrile; 500 μg/L for 2,4-dinitrophenol and 2-methyl-4,6-dinitrophenol; and 1 milligram per liter (mg/L) for antimony [*40 CFR §122.42(a)(1)(ii)*];

    c. Five (5) times the maximum concentration value reported for that pollutant in the Report of Waste Discharge [*40 CFR §122.42(a)(1)(iii)*]; or

    d. The level established by the Regional Water Board in accordance with 40 CFR §122.44(f) [*40 CFR §122.42(a)(1)(iv)*].

2. That any activity has occurred or will occur that would result in the discharge, on a non-routine or infrequent basis, of any toxic pollutant that is not limited in this Order, if that discharge will exceed the highest of the following "notification levels" [*40 CFR §122.42(a)(2)*]:

    a. 500 micrograms per liter (μg/L) [*40 CFR §122.42(a)(2)(i)*];

    b. 1 milligram per liter (mg/L) for antimony [*40 CFR §122.42(a)(2)(ii)*];

    c. Ten (10) times the maximum concentration value reported for that pollutant in the Report of Waste Discharge [*40 CFR §122.42(a)(2)(iii)*]; or

    d. The level established by the Regional Water Board in accordance with 40 CFR §122.44(f) [*40 CFR §122.42(a)(2)(iv)*].

B. Publicly-Owned Treatment Works (POTWs) NOT APPLICABLE

ATTACHMENT E – MONITORING AND REPORTING PROGRAM

Table of Contents

I. General Monitoring Provisions E-2

II. Monitoring Locations E-5

III. Influent Monitoring Requirements E-7

IV. Effluent Monitoring Requirements E-8

V. Whole Effluent Toxicity Testing Requirements E-13

VI. Land Discharge Monitoring Requirements E-17

VII. Reclamation Monitoring Requirements E-17

VIII. Receiving Water Monitoring Requirements..... ..... E-17

IX. Other Monitoring Requirements E-18

X. Reporting Requirements E-18

ATTACHMENT E – MONITORING AND REPORTING PROGRAM (MRP)

The Code of Federal Regulations (CFR) at 40 CFR §122.48 requires that all NPDES permits specify monitoring and reporting requirements. CWC Sections 13267 and 13383 also authorize the Regional Water Quality Control Board (RWQCB) to require technical and monitoring reports. This MRP establishes monitoring and reporting requirements that implement the federal and California regulations.

I. GENERAL MONITORING PROVISIONS

A. General Monitoring Provisions

1. All sampling and sample preservation shall be in accordance with the current edition of "*Standard Methods for the Examination of Water and Wastewater*" (American Public Health Association).

2. All laboratory analyses shall be performed in accordance with test procedures under 40 CFR 136 (revised as of May 14, 1999) "Guidelines Establishing Test Procedures for the Analysis of Pollutants," promulgated by the United States Environmental Protection Agency (EPA), unless otherwise specified in this MRP. For priority pollutants, the test methods must meet the lowest minimum levels (MLs) specified in Attachment G of this Order. Where no methods/MLs are specified in Attachment G, then monitoring is to be conducted in accordance with methods/MLs approved by this Regional Water Board or the State Water Board consistent with the State Water Board's Quality Assurance Program. In addition, the Regional Board and/or EPA, at their discretion, may specify test methods that are more sensitive than those specified in 40 CFR 136.

3. Chemical, bacteriological, and bioassay analyses shall be conducted at a laboratory certified for such analyses by the California Department of Health Services or EPA or at laboratories approved by the Regional Water Board's Executive Officer.

4. Whenever the Discharger monitors any pollutant more frequently than is required by this Order, the results of this monitoring shall be included in the calculation and reporting of the data submitted in the discharge monitoring report specified by the Executive Officer.

5. In conformance with federal regulations 40 CFR 122.45(c), analyses to determine compliance with the effluent limitations for metals shall be conducted using the total recoverable method. For Chromium (VI), the dissolved method in conformance with 40 CFR 136 may be used to measure compliance with the Chromium (VI) limitation.

6. For effluent and ambient receiving water monitoring:

   a. The Discharger shall require its testing laboratory to calibrate the analytical system down to the minimum level (ML)[1] specified in Attachment "G" for pollutants with effluent limitations in this Order, unless an alternative minimum level is approved by the Regional Water Board's Executive Officer. When there is more than one ML value for a given substance, the Discharger shall use the ML values, and their associated analytical methods, listed in Attachment "G" that are below the calculated effluent limitation. The Discharger may select any one of those cited analytical methods for compliance determination. If no ML value is below the effluent limitation, then the lowest ML value, and its associated analytical method listed in Attachment "G" shall be used. Any internal quality control data associated with the sample must be reported when requested by the Executive Officer. The Regional Water Board will reject the quantified laboratory data if quality control data are unavailable or unacceptable.

   b. The Discharger shall report the results of analytical determinations for the presence of chemical constituents in a sample using the following reporting protocols:

      1) Sample results greater than or equal to the reported ML shall be reported as measured by the laboratory (i.e., the measured chemical concentration in the sample).

      2) Sample results less than the reported ML, but greater than or equal to the laboratory's current Method Detection Limit (MDL)[2], shall be reported as "Detected, but Not Quantified," or "DNQ." The estimated chemical concentration of the sample shall also be reported.

      3) Sample results not detected above the laboratory's MDL shall be reported as "not detected" or "ND."

   c. The Discharger shall submit to the Regional Water Board reports necessary to determine compliance with effluent limitations for pollutants in this Order and shall follow the chemical nomenclature and sequential order of constituents shown in Table B of the Ocean Plan. The Discharger shall report with each sample result:

---

1 Minimum level is the concentration at which the entire analytical system must give a recognizable signal and acceptable point. The ML is the concentration in a sample that is equivalent to the concentration of the lowest calibration standard analyzed by a specific analytical procedure, assuming that all the method specified sample weights, volumes, and processing steps have been followed.

2 MDL is the minimum concentration of a substance that can be measured and reported with 99 percent confidence that the analytical concentration is greater than zero, as defined in 40 CFR 136, Appendix B, revised as of May 14, 1999.

1) The reporting level achieved by the testing laboratory; and
2) The laboratory's current MDL, as determined by the procedure found in 40 CFR 136 (revised as of May 14, 1999).

d. For receiving water monitoring and for those pollutants without effluent limitations, the Discharger shall require its testing laboratory to quantify constituent concentrations to the lowest achievable MDL as determined by the procedure found in 40 CFR 136 (revised as of May 14, 1999). In situations where the most stringent applicable receiving water objective, as specified for that pollutant in Table B of the Ocean Plan is below the minimum level value specified in Attachment "G" and the Discharger cannot achieve an MDL value for that pollutant below the ML value, the Discharger shall submit justification why a lower MDL value cannot be achieved. Justification shall be submitted together with monthly monitoring reports.

7. All analytical data shall be reported with identification of practical quantitation levels and with method detection limits, as determined by the procedure found in 40 CFR 136 (revised as of May 14, 1999).

8. The Discharger shall have and implement an acceptable written quality assurance (QA) plan for laboratory analyses. Duplicate chemical analyses must be conducted on a minimum of ten percent (10%) of the samples, or at least one sample per month, whichever is greater. A similar frequency shall be maintained for analyzing spiked samples. When requested by the Regional Water Board or EPA, the Discharger will participate in the NPDES discharge monitoring report QA performance study.

9. For every item of monitoring data where the requirements are not met, the monitoring report shall include a statement discussing the reasons for noncompliance, the actions undertaken or proposed that will bring the discharge into full compliance with requirements at the earliest time, and an estimate of the date when the Discharger will be in compliance. The Discharger shall notify the Regional Water Board by letter when compliance with the time schedule has been achieved.

10. The Discharger shall assure that records of all monitoring information are maintained and accessible for a period of at least five years from the date of the sample, report, or application. This period of retention shall be extended during the course of any unresolved litigation regarding this discharge or by the request of the Regional Water Board at any time. Records of monitoring information shall include:

    a. The information listed in Attachment D- IV Standard Provisions – Records, subparagraph B. of this Order;

b. The laboratory which performed the analyses;

c. The modification(s) to analytical techniques or methods used;

d. All sampling and analytical results, including

   1) Units of measurement used;
   2) Reporting level for the analysis (minimum level, practical quantitation level (PQL));
   3) Results less than the reporting level but above the method detection limit (MDL);
   4) Data qualifiers and a description of the qualifiers;
   5) Quality control test results (and a written copy of the laboratory quality assurance plan);
   6) Dilution factors, if used; and
   7) Sample matrix type; and

e. All monitoring equipment calibration and maintenance records;

f. All original strip charts from continuous monitoring devices;

g. All data used to complete the application for this Order; and,

h. Copies of all reports required by this Order.

i. Electronic data and information generated by the Supervisory Control and Data Acquisition (SCADA) System.

11. The flow measurement system shall be calibrated at least once per year or more frequently, to ensure continued accuracy.

12. All monitoring instruments and devices used by the Discharger to fulfill the prescribed monitoring program shall be properly maintained and calibrated as necessary to ensure their continued accuracy. In the event that continuous monitoring equipment is out of service for greater than a 24-hour period, the Discharger shall obtain a representative grab sample each day the equipment is out of service. The Discharger shall correct the cause(s) of failure of the continuous monitoring equipment as soon as practicable. In its monitoring report, the Discharger shall specify the period(s) during which the equipment was out of service and if the problem has not been corrected, shall identify the steps which the Discharger is taking or proposes to take to bring the equipment back into service and the schedule for these actions.

II. MONITORING LOCATIONS

The Discharger shall establish the following monitoring locations to demonstrate compliance with the effluent limitations, discharge specifications, and other requirements in this Order:

Table 1. Influent and Effluent Monitoring Station Locations

Discharge Point Name	Monitoring Location Name	Monitoring Location Description	Latitude and Longitude
001	M--001	Facility discharge to AES discharge pipeline to Pacific Ocean	33° 38' 38"N, 117°58' 44"W,
002	Influent	AES effluent intake to the desalination facility	33° 38' 39"N, 117°58' 43"W,

Table 2. Receiving Water Monitoring Stations

Monitoring Location Name	Monitoring Location Description	Latitude & Longitude	Depth (ft)
A-1	10,000 feet southeast of the AES outfall tower (perpendicular to the outfall) 1,500 ft offshore	33° 37' 30"N, 117°57' 38"W	Surface
A-2	10,000 feet southeast of the AES outfall tower (perpendicular to the outfall) 1,500 ft offshore	33° 37' 30"N, 117°57' 38"W	Bottom
B-1	1,000 feet southeast of the AES outfall tower (perpendicular to the outfall) 1,500 ft offshore	33° 38' 12"N, 117°58' 55"W	Surface
B-2	1,000 feet southeast of the AES outfall tower (perpendicular to the outfall) 1,500 ft offshore	33° 38' 12"N, 117°58' 55"W	Bottom
C-1	450 feet southeast of the AES outfall tower (perpendicular to the outfall) 1,500 ft offshore	33° 38' 18"N, 117°58' 55"W	Surface
C-2	450 feet southeast of the AES outfall tower (perpendicular to the outfall) 1,500 ft offshore	33° 38' 18"N, 117°58' 55"W	15 feet below Surface
C-3	450 feet southeast of the AES outfall tower (perpendicular to the outfall) 1,500 ft offshore	33° 38' 18"N, 117°58' 55"W	Bottom
D-1	450 feet southeast of the AES outfall (perpendicular to the outfall) 100 ft offshore	33° 38' 23"N, 117°58' 50"W	Surface
D-2	450 feet southeast of the AES outfall (perpendicular to the outfall) 100 ft offshore	33° 38' 23"N, 117°58' 50"W	Bottom
E-1	1,000 feet northeast of the AES outfall tower (perpendicular to the outfall) 1,500 ft offshore	33° 38' 26"N, 117°59' 07"W	Surface
E-2	1,000 feet northeast of the AES outfall tower (perpendicular to the outfall) 1,500 ft offshore	33° 38' 26"N, 117°59' 07"W	Bottom

III. INFLUENT MONITORING REQUIREMENTS

1. The Discharger shall sample and monitor Discharge Serial 002, at the influent monitoring location[3], as follows. Except for flow, monitoring results from the AES – HBGS discharge monitoring may be used to comply with this requirement:

Parameter	Units	Sample Type	Minimum Sampling & Testing Frequency
Flow	mgd	Recorder / Totalizer	Continuous
Oil & Grease	mg/L	Grab	Monthly
Total Residual Chlorine	mg/L	Grab	"
Temperature	°F	Grab	"
pH	pH units	Grab	"
Ammonia-Nitrogen	mg/L	"	Semiannually
Arsenic	µg/L	"	"
Cadmium	"	"	"
Chromium (Hexavalent)	"	"	"
Copper	"	"	"
Lead	"	"	"
Mercury	"	"	"
Nickel	"	"	"
Silver	"	"	"
Zinc	µg/L	Grab	Semiannually
Cyanide	"	"	"
Phenolic Compounds (non-chlorinated)	"	"	"
Chlorinated Phenolics	"	"	"
HCH[4]	"	"	"

3 AES effluent intake to the desalination facility

4 HCH shall mean the sum of the alpha, beta, gamma (lindane) and delta isomers of hexachlorocyclohexane.

IV. EFFLUENT MONITORING REQUIREMENTS

A. Monitoring at M-001

1. The Discharger shall monitor DP-001 at monitoring Station M-001[5], as follows. If more than one analytical test method is listed for a given parameter, the Discharger must select from the listed methods and corresponding Minimum Level specified in Attachment G:

Parameter	Units	Sample Type	Minimum Sampling Frequency	Required Analytical Test Method and (Reporting Minimum Level, units), respectively
Flow	mgd	Recorder/ Totalizer	Continuously	See Section I.A.2., above of this MRP
Total Residual Chlorine	mg/L	Recorder	Continuous	"
Temperature	°F	Recorder	Continuous (see IV.A.2., below)	"
pH	pH units	Grab	Weekly	"
Ammonia-Nitrogen	mg/L	"	"	"
Oil & Grease	"	"	"	"
Total suspended solids	"	"	"	"
Salinity	ppt	"	"	"
Arsenic	µg/L	Grab	Quarterly	"
Cadmium	"	"	"	"
Chromium (Hexavalent)	"	"	"	"
Copper	"	"	"	"
Lead	"	"	"	"
Mercury	"	"	"	"
Nickel	"	"	"	"
Silver	"	"	"	"
Zinc	"	"	"	"
Cyanide	"	"	"	"
Phenolic Compounds (non-chlorinated)	"	"	"	"
Chlorinated Phenolics	"	"	"	"

[5] Before RO effluent mixes with AES discharge. The chronic toxicity testing shall be completed with a mix of RO effluent and ambient seawater in a ratio of 1 to 7.5.

Parameter	Units	Sample Type	Minimum Sampling Frequency	Required Analytical Test Method and (Reporting Minimum Level, units), respectively
HCH	µg/L	Grab	Quarterly	See Section I.A.2., above of this MRP
Toxicity	TUc	(See Section V, Below)	(See Section V, Below)	"
Antimony	µg/L	Grab	Annually (See A.3., below)	"
Beryllium	"	"	"	"
Chromium (III)	"	"	"	"
Selenium	"	"	"	"
Thallium	"	"	"	"
2,3,7,8-Tetrachlorodibenzo-P-Dioxin (TCDD)	"	"	"	"
Acrolein	"	"	"	"
Acrylonitrile	"	"	"	"
Benzene	"	"	"	"
Bromoform	"	"	"	"
Carbon Tetrachloride	"	"	"	"
Chlorobenzene	"	"	"	"
Chlorodibromomethane	"	"	"	"
Chloroethane	"	"	"	"
2-Chloroethyl Vinyl Ether	"	"	"	"
Chloroform	"	"	"	"
Dichlorobromomethane	"	"	"	"
1,1-Dichloroethane	"	"	"	"
1,2-Dichloroethane	"	"	"	"
1,1-Dichloroethylene	"	"	"	"
1,2-Dichloropropane	"	"	"	"
1,3-Dichloropropylene	"	"	"	"
Ethylbenzene	"	"	"	"
Methyl Bromide	"	"	"	"
Methyl Chloride	"	"	"	"
Methylene Chloride	"	"	"	"

Parameter	Units	Sample Type	Minimum Sampling Frequency	Required Analytical Test Method and (Reporting Minimum Level, units), respectively
1,1,2,2-Tetrachloroethane	µg/L	Grab	Annually (See A.3., below)	See Section I.A.2., above of this MRP
Tetrachloroethylene	"	"	"	"
Toluene	"	"	"	"
1,2-Trans-Dichloroethylene	"	"	"	"
1,1,1-Trichloroethane	"	"	"	"
1,1,2-Trichloroethane	"	"	"	"
Trichloroethylene	"	"	"	"
Vinyl Chloride	"	"	"	"
3-Methyl-4-Chlorophenol	"	"	"	"
Acenaphthene	"	"	"	"
Acenaphthylene	"	"	"	"
Anthracene	"	"	"	"
Benzidine	"	"	"	"
Benzo (a) Anthracene	"	"	"	"
Benzo (a) Pyrene	"	"	"	"
Benzo (b) Fluoranthene	"	"	"	"
Benzo (g,h,i) Perylene	"	"	"	"
Benzo (k) Fluoranthene	"	"	"	"
Bis (2-Chloroethoxy) Methane	"	"	"	"
Bis (2-Chloroethyl) Ether	"	"	"	"
Bis (2-Chloroisopropyl) Ether	"	"	"	"
Bis (2-Ethylhexyl) Phthalate	"	"	"	"
4-Bromophenyl Phenyl Ether	"	"	"	"
Butylbenzyl Phthalate	"	"	"	"
2-Chloronaphthalene	"	"	"	"
4-Chlorophenyl Phenyl Ether	"	"	"	"
Chrysene	"	"	"	"

Parameter	Units	Sample Type	Minimum Sampling Frequency	Required Analytical Test Method and (Reporting Minimum Level, units), respectively
Dibenzo (a,h) Anthracene	µg/L	Grab	Annually (See A.3., below)	See Section I.A.2., above of this MRP
1,2-Dichlorobenzene	"	"	"	"
1,3-Dichlorobenzene	"	"	"	"
1,4-Dichlorobenzene	"	"	"	"
3,3'-Dichlorobenzidine	"	"	"	"
Diethyl Phthalate	"	"	"	"
Dimethyl Phthalate	"	"	"	"
Di-n-Butyl Phthalate	"	"	"	"
2,4-Dinitrotoluene	"	"	"	"
2-6-Dinitrotoluene	"	"	"	"
Di-n-Octyl Phthalate	"	"	"	"
1,2-Dipenylhydrazine	"	"	"	"
Fluoranthene	"	"	"	"
Fluorene	"	"	"	"
Hexachlorobenzene	"	"	"	"
Hexachlorobutadiene	"	"	"	"
Hexachlorocyclopentadiene	"	"	"	"
Hexachloroethane	"	"	"	"
Indeno (1,2,3-cd) Pyrene	"	"	"	"
Isophorone	"	"	"	"
Naphthalene	"	"	"	"
Nitrobenzene	"	"	"	"
N-Nitrosodimethylamine	"	"	"	"
N-Nitrosodi-N-Propylamine	"	"	"	"
N-Nitrosodiphenylamine	"	"	"	"
Phenanthrene	"	"	"	"
Pyrene	"	"	"	"
1,2,4-Trichlorobenzene	"	"	"	"
Aldrin	"	"	"	"
Chlordane	"	"	"	"

Parameter	Units	Sample Type	Minimum Sampling Frequency	Required Analytical Test Method and (Reporting Minimum Level, units), respectively
4, 4' - DDT	µg/L	Grab	Annually (See A.3., below)	See Section I.A.2., above of this MRP
4, 4' - DDE	"	"	"	"
4, 4' - DDD	"	"	"	"
Dieldrin	"	"	"	"
Alpha Endosulfan	"	"	"	"
Beta Endosulfan	"	"	"	"
Endosulfan Sulfate	"	"	"	"
Endrin	"	"	"	"
Endrin Aldehyde	"	"	"	"
Heptachlor	"	"	"	"
Heptachlor Epoxide	"	"	"	"
PCB 1016	"	"	"	"
PCB 1221	"	"	"	"
PCB 1232	"	"	"	"
PCB 1242	"	"	"	"
PCB 1248	"	"	"	"
PCB 1254	"	"	"	"
PCB 1260	"	"	"	"
Toxaphene	"	"	"	"

2. Temperature in °F of the waste discharged shall be monitored and recorded continuously. Any increase or changes in temperature shall be recorded in addition to the maximum and minimum temperatures of each 24-hour day.

3. The monitoring frequency for those priority pollutants that are detected during the required annual monitoring at a concentration greater than fifty percent of the most stringent applicable receiving water objectives as specified for that pollutant in the Ocean Plan shall be accelerated to quarterly for one year.

4. At any time a parameter is detected above the maximum daily effluent limitations of the Order, the Discharger shall accelerate the monitoring frequency of that parameter to monthly. If two successive accelerated monitoring results do not indicate the presence of the specific parameter at levels above the maximum daily effluent limitations, the Discharger may return to the regular monitoring frequency. However, if two successive accelerated monitoring results show concentrations of a parameter above the effluent limitations, the Discharger shall conduct/implement a pollutant minimization program and submit a report describing the measures undertaken by the Discharger to prevent the discharge of the pollutant(s) at levels of concern.

5. When there is a discharge of filter backwash water, cleaning solution washwater, and RO system concentrate, the Discharger shall take separate samples and monitor for the constituents listed in IV.A.1, above.

V. WHOLE EFFLUENT TOXICITY TESTING REQUIREMENTS

1. Chronic Toxicity Monitoring:

a. Test Species and Methods

The Discharger shall conduct monthly chronic toxicity tests on flow-weighted 24-hour composite effluent samples mixed with ambient seawater in a ratio of 1 to 7.5. The presence of chronic toxicity shall be estimated as specified in *Short Term Methods for Estimating the Chronic Toxicity of Effluents and Receiving Waters to West Coast Marine and Estuarine Organisms* (EPA/600/R-95/136, 1995). Test Organisms specified in Table III-1 of the Ocean Plan shall be used in conducting the tests. If test organisms specified in the West Coast chronic test methods manual are not available, the presence of chronic toxicity shall be estimated as specified in *Short-Term Methods for Estimating the Chronic Toxicity of Effluents and Receiving Waters to Marine and Estuarine Organisms* (EPA 821-R-02-014, 2002).

For the first three months of each successive 27 month period, the Discharger shall conduct monthly chronic toxicity test screening with a marine vertebrate species, a marine invertebrate species, and a marine alga species. For the remaining 24 months of each 27 month period, the discharger shall conduct the monthly chronic toxicity test using only the most sensitive of the three species used in the first three months. The first screening shall be conducted at the start of plant operation. If the most sensitive test species is/are not available during the testing period, the presence of chronic toxicity shall be estimated using the second most sensitive test species from the toxicity test screening conducted for the current 24-month period. Such changes shall be noted on the discharge

monitoring report (DMR). Note that a 27 month period is used so that the three month testing period rotates throughout the year over time.

2. Quality Assurance

a. A series of five dilutions and a control shall be tested. The series shall include the instream waste concentration (IWC), two dilutions below the IWC, and two dilutions above the IWC (e.g., 12.5, 25, 50, 75, and 100 percent effluent, where IWC = 50). The chronic IWC for this discharge is 0.55 percent effluent.

b. If test organisms are not cultured in-house, concurrent testing with reference toxicants shall be conducted. If organisms are cultured in-house, monthly testing with reference toxicants shall be conducted. Reference toxicant tests shall be conducted using the same test conditions as effluent toxicity tests (i.e., same test duration, etc.).

c. If either the reference toxicant test or the effluent test does not meet all test acceptability criteria as specified in the test methods manual, then the Discharger must re-sample and re-test within approximately 14 days.

d. Chronic effluent and reference toxicant tests must meet the upper and lower bounds on test sensitivity, as determined by calculating the Percent Minimum Significant Difference (PMSD) for each test result. Test sensitivity bounds are specified in Table 3-6 of *Understanding and Accounting for Method Variability in Whole Effluent Toxicity Applications under the National Pollutant Discharge Elimination System Program* (EPA/833-R-00-003, June 2000). There are five possible outcomes based on the PMSD result:

1) Unqualified Pass: The test's PMSD is within the bounds in Table 3-6 and there is no significant difference between the means for the control and the IWC treatment. The regulatory authority would conclude that there is no toxicity at the IWC concentration.

2) Unqualified Fail: The test's PMSD is larger than the lower bound (but not greater than the upper bound) in Table 3-6 and there is a significant difference between the means for the control and the IWC treatment. The regulatory authority would conclude that there is toxicity at the IWC concentration.

3) Lacks Test Sensitivity: The test's PMSD exceeds the upper bound in Table 3-6 and there is no significant difference between the means for the control and the IWC treatment. The test is considered invalid. The Discharger must re-sample and re-test within approximately 14 days.

4) Lacks Test Sensitivity: The test's PMSD exceeds the upper bound in Table 3-6 and there is a significant difference between the means for the control and the IWC treatment. The test is considered valid. The regulatory authority would conclude that there is toxicity at the IWC concentration.

5) Very Small but Significant Difference: The relative difference (see Section 6.4.2 of EPA/833-R-00-003) between the means for the control and the IWC treatment is smaller than the lower bound in Table 3-6 and this difference is statistically significant. The test is acceptable. The NOEC is determined as described in Sections 6.4.2 and 6.4.3 of EPA/833-R-00-003.

e. Control and dilution water should be receiving water or lab water, as described in the test methods manual. If dilution water is different from culture water, then a second control using culture water shall also be tested.

3. Additional (Accelerated) Toxicity Testing

a. If toxicity (as defined) is detected, the Discharger shall increase the frequency of chronic toxicity testing to every two weeks whenever any test result exceeds 8.5 TUc. The first test under the accelerated schedule shall be conducted within two weeks of receiving notice of the test that exceeds 8.5 TUc, and every two weeks thereafter. The Discharger may resume the regular test schedule when two consecutive chronic toxicity tests result in 8.5 TUc or less, or when the results of the Initial Investigation Reduction Evaluation conducted by the Discharger have adequately addressed the identified toxicity problem.);

b. However, if implementation of the initial investigation TRE workplan indicates the source of toxicity (e.g., a temporary plant upset), then the Discharger shall conduct only the first accelerated test required above. If toxicity (as defined) is not detected in this first test, the Discharger may return to the normal sampling frequency required herein.

c. If toxicity (as defined) is not detected in the first test required above, then the Discharger may return to the normal sampling frequency required in herein.

4. Toxicity Reduction Evaluation/Toxicity Identification Evaluation (TRE/TIE)

a. If toxicity (as defined) is detected in any of the accelerated monitoring, then, based on an evaluation of the test results and additional available information, the Executive Officer may determine that the Discharger shall initiate a TRE, in accordance with the Discharger's initial investigation TRE workplan and EPA/600/2-88/070 Generalized Methodology for Conducting Industrial Toxicity Reduction Evaluations (TRE's); April 1989). Moreover, the Discharger shall expeditiously develop a detailed TRE workplan which includes:

1) Further actions to investigate/identify the cause(s) of toxicity;

2) Actions the Discharger has taken/will take to mitigate the impact of the discharge, to correct the noncompliance, and to prevent the recurrence of toxicity;

3) An expeditious schedule under which these actions will be implemented.

b. As part of this TRE process, the Discharger may initiate a TIE using the test methods manuals and TIE Phase I (EPA/600/R-96/054, 1996), Phase II (EPA/600/R-92/080, 1993), and Phase III (EPA/600/R-92/081, 1993) manuals to identify the cause(s) of toxicity.

c. If a TRE/TIE is initiated prior to completion of the accelerated testing schedule required by Toxicity Requirement, then the accelerated testing schedule may be terminated, or used as necessary in performing the TRE/TIE.

5. Reporting

a. The Discharger shall submit a full report of all toxicity test results, including any toxicity testing required by Toxicity Requirements with the discharge monitoring report (DMR) for the month in which the toxicity tests are conducted. A full report shall consist of: (1) toxicity test results; (2) dates of sample collection and initiation of each toxicity test; (3) chronic toxicity effluent limitations. Toxicity test results shall be reported according to the test methods manual chapter on Report Preparation. It is suggested that the Discharger submit the data on an electronic disk in the Toxicity Standardized Electronic Reporting Form (TSERF) (*Standardized Electronic Reporting Format for Monitoring Effluent Toxicity: October 1994 Format*, State Water Resources Control Board, 1995).

If the initial investigation TRE workplan is used to determine that additional (accelerated) toxicity testing is unnecessary, these results shall be submitted with the DMR for the month in which investigations conducted under the TRE workplan occurred.

b. Within approximately 14 days of receipt of test results exceeding an chronic toxicity effluent limitation, the Discharger shall provide written notification to the Regional Board of:

1) Findings of the TRE or other investigation to identify the cause(s) of toxicity;

2) Actions the Discharger has taken/will take, to mitigate the impact of the discharge and to prevent the recurrence of toxicity;

3) When corrective actions, including a TRE, have not been *completed*, an expeditious schedule under which corrective actions will be implemented; or

4) The reason for not taking corrective action, if no action has been taken.

VI. LAND DISCHARGE MONITORING REQUIREMENTS – NOT APPLICABLE

VII. RECLAMATION MONITORING REQUIREMENTS – NOT APPLICABLE

VIII. RECEIVING WATER MONITORING REQUIREMENTS

Receiving water monitoring in the vicinity of the outfall shall be conducted as specified below and at monitoring stations shown in Table 2, above. The receiving water monitoring program may be conducted jointly with other dischargers. During monitoring events, sample stations shall be located, if possible, using a land-based microwave positioning system or a satellite positioning system such as global positioning If an alternate navigation system is proposed, its accuracy should be compared to that of microwave and satellite based systems, and any compromises in accuracy shall be justified. The monitoring frequency shall be quarterly for the 1st and 5th year of the permit and semiannually during the 2nd, 3rd and fourth year of the permit. The Discharger shall record the date and time of sampling, and a general description of observation made at the sampling location (e.g. windy, sunny, rough sea condition etc).

A. Light Transmittance Monitoring

The light transmittance shall be monitored via a Secchi disk at Monitoring Locations A-1, B-1, C-1, D-1 and E-1.

B. Water Quality Monitoring

The dissolved oxygen concentration and pH shall be monitored via grab samples at the surface at Monitoring Locations A-1, B-1, C-1, D-1 and E-1. Dissolved oxygen shall be reported as milligrams per liter (mg/L). pH shall be reported as pH Units.

C. Temperature and Salinity Monitoring

Temperature and salinity shall be monitored at all monitoring locations listed in Table 2. Temperature shall be reported in degrees Fahrenheit (°F). Salinity shall be reported in parts per thousand (ppt).

IX. OTHER MONITORING REQUIREMENTS

1. Storm Water Monitoring and Reporting

For storm water discharges, the Discharger shall comply with the monitoring and reporting requirements as outlined in Attachment "D".

X. REPORTING REQUIREMENTS

A. General Monitoring and Reporting Requirements

1. The Discharger shall comply with all Standard Provisions (Attachment D) related to monitoring, reporting, and recordkeeping.

2. The monthly reports for June and December shall include a roster of plant personnel, including job titles, duties, and level of State certification for each individual.

3. By January 1 of each year, the Discharger shall submit an annual report to the Regional Water Board. The annual report shall include the following:

   a. Tabular and graphical summaries of the monitoring data obtained during the previous year;
   b. A discussion of the compliance record and the corrective actions taken or planned, which may be needed to bring the discharge into full compliance with the waste discharge requirements; and
   c. A summary of the quality assurance (QA) activities for the previous year.

4. At any time during the term of this Order when electronic submittal of monitoring reports has become the norm, the State or Regional Water Board may notify the Discharger to discontinue submittal of hard copies of reports. When such notification is given, the Discharger shall stop submitting hard copies of required monitoring reports.

B. Self Monitoring Reports (SMRs)

1. At any time during the term of this Order, the State or Regional Water Board may notify the Discharger to electronically submit self-monitoring reports. Until such notification is given, the Discharger shall submit self-monitoring reports in accordance with the requirements described below.

2. The Discharger shall submit monthly, semi-annual, and annual Self Monitoring Reports including the results of all required monitoring using USEPA-approved test methods or other test methods specified in this Order. Monthly reports shall be due on the 1st day of the second month following the end of each calendar month; Semi-annual reports shall be due on August 1 and February 1 following each semi-annual period; Annual reports shall be due on February 1 following each calendar year.

3. Monitoring periods and reporting for all required monitoring shall be completed according to the following schedule:

Sampling Frequency	Monitoring Period Begins On...	Monitoring Period	SMR Due Date
Continuous	Permit effective date	All	First day of second calendar month following month of sampling
Daily	Permit effective date	(Midnight through 11:59 PM) or any 24-hour period that reasonably represents a calendar day for purposes of sampling.	First day of second calendar month following month of sampling
Weekly	Sunday following permit effective date or on permit effective date if on a Sunday	Sunday through Saturday	First day of second calendar month following month of sampling
Monthly	First day of calendar month following permit effective date or on permit effective date if that date is first day of the month	1st day of calendar month through last day of calendar month	First day of second calendar month following month of sampling
Quarterly	Closest of January 1, April 1, July 1, or October 1 following permit effective date	January 1 through March 31 April 1 through June 30 July 1 through September 30 October 1 through December 31	May 1 August 1 November 1 February 1
Semi-Annually	Closest of January 1 or July 1 following permit effective date	January 1 through June 30 July 1 through December 31	August 1 February 1
Annually	January 1 following permit effective date	January 1 through December 31	February 1

4. The Discharger shall report with each sample result the applicable Minimum Level (ML) and the current Method Detection Limit (MDL), as determined by the procedure in 40 CFR Part 136.

5. The Discharger shall arrange all reported data in a tabular format. The data shall be summarized to clearly illustrate whether the facility is operating in compliance with interim and/or final effluent limitations.

6. The Discharger shall attach a cover letter to the SMR. The information contained in the cover letter shall clearly identify violations of the WDRs; discuss corrective actions taken or planned; and the proposed time schedule for corrective actions. Identified violations must include a description of the requirement that was violated and a description of the violation.

7. Discharge monitoring data shall be submitted in a format acceptable to the Regional Water Board and EPA. Specific reporting format may include preprinted forms and/or electronic media. The results of all monitoring required by this Order shall be reported to the Regional Water Board, and shall be submitted in such a format as to allow direct comparison with the limitations and requirements of this Order. The hard copy of submitted reports shall serve as the official submittal.

8. SMRs must be submitted to the Regional Water Board, signed and certified as required by the standard provisions (Attachment D), to the address listed below:

   Regional Water Quality Control Board
   Santa Ana Region
   3737 Main Street, Suite 500
   Riverside, CA 92501-3348

C. Discharge Monitoring Reports (DMRs)

1. As described in Section X.B.1 above, at any time during the term of this Order, the State or Regional Water Board may notify the Discharger to electronically submit self-monitoring reports. Until such notification is given, the Discharger shall submit discharge monitoring reports (DMRs) in accordance with the requirements described below.

2. DMRs must be signed and certified as required by the standard provisions (Attachment D). The Discharge shall submit the original DMR and one copy of the DMR to the address listed below:

   State Water Resources Control Board
   Discharge Monitoring Report Processing Center
   Post Office Box 671
   Sacramento, CA 95812

2. All discharge monitoring results must be reported on the official USEPA pre-printed DMR forms (EPA Form 3320-1). Forms that are self-generated or modified cannot be accepted.

ATTACHMENT F – FACT SHEET - Table of Contents

I. Permit Information F-2

II. Facility Description F-3
- A. Description of Wastewater and Control Systems
- B. Discharge Points and Receiving Waters
- C. Summary of Existing Requirements and SMR Data
- D. Compliance Summary
- E. Planned Changes

III. Applicable Plans, Policies, & Regulations F-8
- A. Legal Authorities
- B. California Environmental Quality act (CEQA)
- C. State And Federal Regulations, Policies, and Plans
- D. Impaired Water Bodies on CWA 303(d) List

IV. Rationale for Effluent Limitations and Discharge Specifications F-12
- A. Discharge Prohibitions
- B. Technology-Based Effluent Limitations
- C. Water Quality-Based Effluent Limitations
- D. Interim Effluent Limitations
- E. Land Discharge Specifications
- F. Reclamation Specifications

V. Rationale for Receiving Water Limitations F-19
- A. Surface Water
- B. Groundwater

VI. Rationale for Monitoring & Reporting Requirements F-20
- A. Influent Monitoring
- B. Effluent Monitoring
- C. Whole Effluent Toxicity Testing
- D. Receiving Water Monitoring
- E. Other Monitoring Requirements

VII. Rationale for Provisions F-22
- A. Standard Provisions
- B. Special Provisions

VIII. Public Participation F-23
- A. Notification of Interested Parties
- B. Written Comments
- C. Public Hearing
- D. Waste Discharge Requirements Petitions
- E. Information and Copying
- F. Register of Interested Persons
- G. Additional Information

ATTACHMENT F – FACT SHEET

As described in Section II of this Order, this Fact Sheet includes the legal requirements and technical rationale that serve as the basis for the requirements of this Order.

This Order has been prepared under a standardized format to accommodate a broad range of discharge requirements for Dischargers in California. Only those sections or subsections of this Order that are specifically identified as "not applicable" have been determined not to apply to this Discharger. Sections or subsections of this Order not specifically identified as "not applicable" are fully applicable to this Discharger.

I. PERMIT INFORMATION

The following table summarizes administrative information related to the facility.

Table 1. Facility Information

WDID	**8 303431001**
Discharger	**Poseidon Resources (Surfside) L.L.C.**
Name of Facility	**Poseidon Seawater Desalination Facility at Huntington Beach (PSDFHB)**
Facility Address	**21730 Newland Street**
	Huntington Beach, CA 92646
	Orange County
Facility Contact, Title and Phone	**Andy Kingman, Chief Executive Officer, (203) 327-7740**
Authorized Person to Sign and Submit Reports	**Andy Kingman, Chief Executive Officer, (203) 327-7740**
Mailing Address	**3760 Kilroy Airport Way, Suite 260, Long Beach, CA 90806**
Billing Address	**SAME**
Type of Facility	**Desalination**
Major or Minor Facility	**Minor**
Threat to Water Quality	**2**
Complexity	**B**
Pretreatment Program	**N/A**
Reclamation Requirements	**N/A**
Facility Permitted Flow	**56.59 MGD**
Facility Design Flow	**56.59 MGD**
Watershed	**Santa Ana River**
Receiving Water	**Pacific Ocean**
Receiving Water Type	**Ocean Water**

A. Poseidon Resources (Surfside) L.L.C. (hereinafter Discharger) is the owner and operator of the Poseidon seawater desalination facility at Huntington Beach (hereinafter Facility).

For the purposes of this Order, references to the "discharger" or "permittee" in applicable federal and State laws, regulations, plans, or policy are held to be equivalent to references to the Discharger herein.

B. The Facility will discharge up to 50 million gallons per day (MGD) of concentrated seawater, and up to a total of 6.6 MGD of filter backwash, RO subsequent rinse wastewater, and stormwater runoff to the Pacific Ocean, a water of the United States.

C. The Discharger filed a report of waste discharge and submitted an application for Waste Discharge Requirements (WDRs) and a National Pollutant Discharge Elimination System (NPDES) permit on May 27, 2003. Supplemental information was received subsequently and the application was deemed complete on February 3, 2006.

II. FACILITY DESCRIPTION

The Desalination Facility will withdraw source water from the existing Applied Energy Services Corporation (AES) Huntington Beach Generating Station (HBGS) cooling system discharge pipe and remove the salts in the water through a desalination process. The Discharger will utilize approximately 100 MGD of HBGS cooling water as source water and produce 50 MGD of potable water. The Facility is expected to start operation in the middle part of 2009. The desalination process consists of the following:

1. **Intake pumps**- On an as-needed basis, expected to be only intermittently, the intake water will be chlorinated to prevent microbiological growth in the intake systems and filter media.
2. **Coagulation** - Addition of Coagulant (ferric chloride or ferric sulfate) and polymer to enhance the operation of the filters and to provide the required quality water to the reverse osmosis (RO) treatment.
3. **Media Filtration pretreatment**- A gravity media filtration pretreatment system will be included to prepare the water for the RO treatment. The final phase of pretreatment will be cartridge filtration. The filter cartridges will be standard 5-micron polypropylene wound filters enclosed in a pressure vessel. The pressure vessels will be located in the RO feed water piping between the pretreatment and RO processes.
4. **pH Adjustment and Dechlorination** – After the media filtration pretreatment and before the cartridge filtration, sulfuric acid will be added to the water to reduce the potential for scale formation in the RO process. The amount of acid added to the water will be determined based on the bicarbonate concentration of the seawater and the Stiff Davis Index (SDI) needed in the RO concentrate. The acid also provides carbon dioxide in the RO permeate (product water), which is needed to react with the lime for product water stabilization in the permeate post-treatment step. Dechlorination using sodium bisulfite will also be done before the cartridge

filtration to prevent damage to the RO membranes and protect the RO systems.

5. **RO Treatment Systems** - The RO process will be a single-pass design using high-rejection seawater membranes. The system will be made up of 13 process trains, each train with a design capacity of about 4.2 MGD. The plant will be designed to produce 50 MGD of potable water using only 12 of the 13 RO trains. The 13th RO train will be provided as a standby to be used when any of the other trains requires maintenance. This arrangement provides approximately 4 percent standby capacity, which is needed to ensure continuous potable water delivery while accommodating normal membrane wear and maintenance requirements.

6. **Post-Treatment Process:** Product water from the RO process requires chemical conditioning prior to delivery to the distribution system to increase hardness and reduce its corrosion potential. Lime will be used for post-treatment stabilization of the water. In addition, the final product water must be disinfected prior to delivery to the distribution system. Chlorine, in the form of sodium hypochlorite, will be added as a disinfectant to meet the State Department of Health Services (DHS) water quality standards for potable water disinfection and to control biological growth in the transmission pipeline.

A. Description of Wastewater and Control Systems

The desalination facility will generate the following waste streams that will be discharged to the AES HBGS cooling system discharge pipe and thence to the AES HBGS ocean outfall:

1. Brine waste resulting from the RO treatment process - Approximately one gallon of concentrated seawater will be created for every gallon of potable drinking water produced; therefore, for the proposed 50 MGD desalination plant, approximately 50 MGD of concentrated seawater will be generated. The salinity of the concentrate will be 68,000 mg/L, twice the concentration of the incoming seawater (34,000 mg/L).

2. Spent Filter Backwash Water - The pretreatment filters will be cleaned (backwashed) to remove the intake seawater solids that accumulate in the media beds. The desalination plant will use filtered seawater for backwash. The amount of backwash water used will be between 3 to 6.3 percent (average of 4 percent) of the total intake seawater flow required for desalination. For a 50-MGD facility, operating at 50-percent recovery, the average and maximum amounts of filter backwash water will be 4.0 MGD and 6.3 MGD, respectively. The spent filter backwash water will flow from the filters to the desalination plant effluent outfall to the AES HBGS cooling system discharge pipe. The spent filter backwash water will have the same salinity as the intake ocean water (34,000 mg/L).

3. Used Membrane Cleaning Solution - The accumulation of silts or scale on the RO membranes causes fouling that reduces membrane performance. The RO system membranes will be cleaned periodically to remove foulants and extend the membrane useful life. Typical cleaning frequency of the R0 membranes is twice per year. Typically, one RO train is taken off-line at a time for cleaning and two RO trains are cleaned per month. However, in extreme conditions (for example, during very wet years or prolonged periods of strong winds when the silt content in the raw seawater may increase significantly), up to four membrane trains may need to be cleaned in the same month.

   Membrane cleaning typically takes one day per membrane train to complete. Since typically one membrane train is cleaned at a time and each of the 13 RO membrane trains have to be cleaned two times per year, the cleaning of all membrane trains will typically take a total of 26 days per year (13 trains x 2 cleanings/train x 1 day per cleaning). Taking into consideration that there are 52 weeks per year, an average of one membrane train will be cleaned every two weeks, i.e. typically, two membrane cleanings will occur per month. Under worst-case scenario conditions, four membrane cleanings may need to occur in some months.

   To clean the membranes, a chemical cleaning solution is circulated through the membrane train for a preset time. After the cleaning solution circulation is completed, the spent cleaning solution is evacuated from the train to a storage tank and the membranes are flushed with RO permeate (flush water). The flush water is used to remove all the residual cleaning solution from the RO train in order to prepare the train for normal operation. The flush water for membrane cleaning is stored separately from the rest of the plant permeate in a flush tank.

   Chemicals typically used for cleaning include:
   Citric Acid - (2% solution)
   Sodium Hydroxide B (0.1% solution)
   Sodium Tripolyphosphate B (2 % solution)
   Sulfuric acid B (0.1% solution)

   Depending on the nature of membrane fouling, the cleaning chemicals listed above may be combined in one of the following two cleaning solutions:
   Cleaning Solution 1 - Low pH Cleaning Solution:
   - Citric Acid - (2% solution);
   - Sodium Hydroxide - (0. 1 % solution), to adjust pH to 4.0 for cleaning;
   - Sodium Hydroxide - (0.1% solution), to adjust pH to 7.0 prior to discharge.

   Cleaning Solution 2 - High pH Cleaning Solution:
   - Sodium Hydroxide - (0.1 % solution);
   - Sodium Dodecylbenzene Sulfonate - (0.25%);

- Sulfuric acid to adjust pH to 10.0 for cleaning;
- Sulfuric acid to adjust pH to 7.0 prior to discharge.

The actual cleaning solution selected for a given cleaning of a membrane train will be based on the observed operation and performance of the train once it is placed in operation.

The various membrane cleaning waste discharge streams are described below:

- Concentrated Waste Cleaning Solution is the actual spent membrane-cleaning chemical. RO spent cleaning wastes (0.29 MGD) will be stored and treated. The first flush will be discharged to OCSD regional wastewater treatment facility. The water following the first flush will be discharged with the concentrated brine to the ocean.
- Flush Water - Residual Cleaning Solution (First Flush) is the first batch of clean product water used to flush the membranes after the recirculation of cleaning solution is discontinued. This first flush contains diluted residual cleaning solution. The first flush will be discharged to the Orange County Sanitation District (OCSD) regional wastewater treatment facility.
- Flush Water - Permeate (Subsequent flushes) is the spent cleaning water used for several consecutive membrane flushes after the first flush. This flush water is of low salinity and contains only trace amounts of cleaning solution. This subsequent flush water will be discharged with the concentrated brine to the ocean.
- Flush Water - Concentrate Removed during Flushing is the flush water removed from the concentrate lines of the RO system during the flushing process. This water contains very little cleaning chemicals and is of slightly higher salinity concentration than the permeate used for flushing.

Except for the concentrated waste cleaning solution and first flush, all the membrane cleaning waste streams listed above will be conveyed to a 200,000 gallon washwater tank for used cleaning solution retention and treatment prior to discharge to the desalination plant effluent outfall to the AES HBGS cooling system discharge pipe. Since the volume of used cleaning solution generated during cleaning of one membrane train is 91,000 gallons, the washwater tank will have adequate capacity to store cleaning solution from two simultaneous RO membrane train cleanings.

The washwater tank will be equipped with mixing and pH neutralization systems. The mixing system will provide complete mixing of all four cleaning solution streams listed above. After mixing with the flush water, the concentrations of the cleaning solution chemicals will be reduced significantly. The used cleaning solution will be neutralized to a pH level compatible with the ocean water pH and pumped out of the washwater tank to the desalination plant effluent outfall to the AES HBGS cooling

system discharge pipe at a rate of 200 gpm (0.29 MGD). Because the volume of the used cleaning solution per one cleaning is 91,000 gallons, it will take approximately 7.5 to 8 hours to discharge the treated cleaning solution to the desalination plant outfall.

Under average conditions, the total volume of used membrane cleaning solution discharged from the desalination plant will be 182,000 gallons/month. These discharges will be discrete events and will continue for a total of 15 to 16 hours per month at a rate of 200 gpm (0.29 MGD). Under worst case scenario conditions, when the number of membrane cleanings per month may need to be doubled for some period, the total volume of the discharged treated cleaning solution will be a maximum of 364,000 gallons/month.

The typical volume of waste streams generated during the cleaning of one RO membrane train (independent of which of the two cleaning solutions. Cleaning Solution 1 or 2, is actually used for cleaning) is summarized in Table 2.

Table 2. - Typical RO Membrane Cleaning Solution Discharge Volumes:

Type of Discharge	Gallons	Percentage of Total Volume of Discharge per-RO Train Cleaning
Concentrated Waste Cleaning Solution	4,000	4.4
Flush Water - Residual Cleaning Solution (First Flush)	11,000	12.0
Flush Water - Permeate (Subsequent Flushes)	45,600	50.2
Flush Water - Concentrate Removed During Flushing	30,400	33.4
Total Discharge (gallons per membrane train cleaning)	91,000	100

Attachment C-1 shows Schematic of water flow at the Facility.
Attachment C-2 shows the cooling water intake for desalination and discharge point.

B. Discharge Points and Receiving Waters

The facility will be discharging only at Discharge Serial 001 located at latitude 33°38'38" and longitude 117°58'48", before RO effluent mixes with AES effluent ahead of the outfall and then flows to the Pacific Ocean.

C. Summary of Existing Requirements and Self Monitoring Report (SMR) Data (Not Applicable)

D. Compliance Summary (Not Applicable)

E. Planned Changes (Not Applicable)

III. APPLICABLE PLANS, POLICIES, AND REGULATIONS

The requirements contained in the proposed Order are based on the requirements and authorities described in this section.

A. Legal Authorities

This Order is issued pursuant to Section 402 of the Federal Clean Water Act (CWA) and implementing regulations adopted by the U.S. Environmental Protection Agency (USEPA) and Chapter 5.5, Division 7 of the California Water Code (CWC). It shall serve as a NPDES permit for point source discharges from this Facility to surface waters. This Order also serves as Waste Discharge Requirements (WDRs) pursuant to Article 4, Chapter 4 of the CWC.

B. California Environmental Quality Act (CEQA)

In compliance with the California Environmental Quality Act, an environmental impact report (EIR) for the Poseidon Seawater Desalination Project at Huntington Beach was certified by the City of Huntington Beach on September 6, 2005.

This action to adopt an NPDES permit is exempt from the provisions of Chapter 3 of Division 13 of the California Environmental Quality Act (Public Resources Code Section 21100, et seq.) in accordance with Section 13389 of the CWC.

C. State and Federal Regulations, Policies, and Plans

1. **Water Quality Control Plans**. The Regional Water Board adopted a Water Quality Control Plan for the Santa Ana Basin (hereinafter Basin Plan) that became effective on January 24, 1995. The Basin Plan designates beneficial uses, establishes water quality objectives, and contains implementation programs and policies to achieve those objectives for all waters addressed through the plan, including the Pacific Ocean. In addition, State Water Resources Control Board (State Water Board) Resolution No. 88-63 (Sources of Drinking Water Policy) requires that, with certain exceptions, the Regional Water Board assign the municipal and domestic water supply use to water bodies. Based on the exception criteria specified in Resolution No. 88-63, the Regional Board excepted the nearshore and offshore zones of the ocean from the municipal and domestic supply beneficial use.

On January 22, 2004, the Regional Water Board adopted Resolution No. R8-2004-0001, amending the Basin Plan to incorporate revised boundaries for groundwater subbasins, now termed "management zones", new nitrate-nitrogen and TDS objectives for the new management zones, and new nitrogen and TDS management strategies applicable to both surface and ground waters. The State Water Resources Control Board and Office of Administrative Law (OAL) approved the N/TDS Amendment on September 30, 2004 and December 23, 2004, respectively. The surface water components of the N/TDS Amendment are awaiting EPA approval. However, these amendments do not affect the requirements applicable to this discharge.

The Basin Plan relies primarily on the requirements of the *Water Quality Control Plan for Ocean Waters of California* (Ocean Plan) for protection of the beneficial uses of the State ocean waters. The Basin Plan specifies the beneficial uses for the nearshore and offshore zones of the Ocean that are within the jurisdiction of the Santa Ana Regional Water Board.

Table 3. Basin Plan Beneficial Uses:

Discharge Point	Receiving Water Name	Beneficial Use(s)
001	Pacific Ocean Nearshore[1] Zone from the San Gabriel River to Poppy Street in Corona del Mar	Present or Potential Beneficial Use a. Industrial service supply, b. Navigation, c. Water contact recreation, d. Non-contact water recreation, e. Commercial and sportfishing, f. Wildlife habitat, g. Rare, threatened or endangered spieces, h. Spawning, reproduction, and development, i. Marine habitat, and j. Shellfish harvesting. Excepted from Municipal and Domestic supply
001	Pacific Ocean Offshore Zone between the Nearshore Zone and the limit of the State waters	Present or Potential Beneficial Use a. Industrial service supply, b. Navigation, c. Water contact recreation, d. Non-contact water recreation, e. Commercial and sportfishing, f. Wildlife habitat, g. Rare, threatened or endangered species, and h. Spawning, reproduction, and development, and Marine habitat. Excepted from Municipal and Domestic supply

1 The Nearshore Zone is defined by the Ocean Plan, Chapter II, B.1.a., as "within a zone bounded by the shoreline and a distance of 1,000 feet from the shoreline or the 30 foot depth contour, whichever is further from the shoreline".

Requirements of this Order specifically implement the applicable Water Quality Control Plans

2. **Thermal Plan.** The State Water Board adopted a Water Quality Control Plan for Control of Temperature in the Coastal and Interstate Water and Enclosed Bays and Estuaries of California (Thermal Plan) on May 18, 1972, and amended this plan on September 18, 1975. This plan contains temperature objectives for surface waters.

3. **California Ocean Plan.** The State Water Board adopted the Water Quality Control Plan for Ocean Waters of California, California Ocean Plan (Ocean Plan) in 1972 and amended it in 1978, 1983, 1988, 1990, 1997, 2000, and 2005. The State Water Board adopted the latest amendment on April 21, 2005 and it became effective on February 14, 2006. The Ocean Plan is applicable, in its entirety, to point source discharges to the ocean. The Ocean Plan identifies beneficial uses of ocean waters of the State to be protected.

Table 4. Ocean Plan Beneficial Uses

Discharge Point	Receiving Water	Beneficial Uses
Outfall 001	Pacific Ocean	Industrial water supply; water contact and non-contact recreation, including aesthetic enjoyment; navigation; commercial and sport fishing; mariculture; preservation and enhancement of designated Areas of Special Biological Significance (ASBS); rare and endangered species; marine habitat; fish migration, fish spawning and shellfish harvesting.

In order to protect the beneficial uses, the Ocean Plan establishes water quality objectives and a program of implementation. Requirements of this Order implement the Ocean Plan.

4. **Alaska Rule.** On March 30, 2000, USEPA revised its regulation that specifies when new and revised State and Tribal water quality standards (WQS) become effective for CWA purposes (40 CFR 131.21, 65 FR 24641, April 27, 2000). Under the revised regulation (also known as the Alaska rule), new and revised standards submitted to USEPA after May 30, 2000, must be approved by USEPA before being used for CWA purposes. The final rule also provides that standards already in effect and submitted to USEPA by May 30, 2000, may be used for CWA purposes, whether or not approved by USEPA.

5. **Stringency of Requirements for Individual Pollutants.** This Order contains restrictions on individual pollutants that are no more stringent than required by the federal CWA. Individual pollutant restrictions consist of technology-based restrictions and water quality-based effluent limitations. There are no technology-based effluent limitations in this Order. Water quality-based effluent limitations have been scientifically derived to implement water quality objectives that protect beneficial uses. Both the beneficial uses and the water quality objectives have been approved pursuant to federal law and are the applicable federal water quality standards. All beneficial uses and water quality objectives contained in the Basin Plan and the Ocean Plan were approved under state law and submitted to and approved by USEPA prior to May 30, 2000. Any water quality objectives and beneficial uses submitted to USEPA prior to May 30, 2000, but not approved by USEPA before that date, are nonetheless "applicable water quality standards for purposes of the CWA" pursuant to 40 CFR 131.21(c)(1). Collectively, this Order's restrictions on individual pollutants are no more stringent than required to implement the technology-based requirements of the CWA and the applicable water quality standards for purposes of the CWA.

6. **Antidegradation Policy.** Section 131.12 of 40 CFR requires that State water quality standards include an antidegradation policy consistent with the federal policy. The State Water Board established California's antidegradation policy in State Water Board Resolution 68-16, which incorporates the requirements of the federal antidegradation policy. Resolution 68-16 requires that existing water quality is maintained unless degradation is justified based on specific findings.

   Investigations were conducted by the Discharger to evaluate compliance with antidegradation requirements (Poseidon Seawater Desalination Facility at Huntington Beach, Antidegradation Policy Analysis, 2006). The results of these investigations indicate that there would be a slight increase in salinity as the result of discharges from the facility but that this change would be spatially localized and confined to the mixing zone. Further, the discharges would not cause or contribute to adverse impacts on the beneficial uses of the receiving waters. Therefore, discharges from the facility are consistent with the antidegradation provisions of 40 CFR Sec. 131.12 and State Water Board Resolution 68-16.

7. **Anti-Backsliding Requirements.** Sections 402(o)(2) and 303(d)(4) of the CWA and 40 CFR §122.44(l) prohibit backsliding in NPDES permits. These anti-backsliding provisions require that effluent limitations in a reissued permit must be as stringent as those in the previous permit, with some exceptions in which limitations may be relaxed. Since this is a new permit, anti-backsliding requirements are not applicable.

8. **Monitoring and Reporting Requirements.** Section 122.48 of 40 CFR requires that all NPDES permits specify requirements for recording and reporting monitoring results. Sections 13267 and 13383 of the CWC authorize the Regional Water Board to require technical and monitoring reports. The Monitoring and Reporting Program (MRP) establishes monitoring and reporting requirements to implement federal and State requirements. This MRP is provided in Attachment E.

D. Impaired Water Bodies on CWA 303(d) List

On July 25, 2003, the U.S.EPA gave final approval to California's 2002 list of impaired water bodies, prepared by the State Board pursuant to Section 303(d) of the CWA. These waters are not expected to meet applicable water quality standards after implementation of technology-based effluent limitations for point sources. The Huntington Beach State Park is included in the 303d list for enterococci. The nearshore and offshore zones of Huntington Beach State Park are the immediately affected receiving waters of discharges from the Poseidon facility.

IV. RATIONALE FOR EFFLUENT LIMITATIONS AND DISCHARGE SPECIFICATIONS

The CWA requires point source discharges to control the amount of conventional, non-conventional, and toxic pollutants that are discharged into the waters of the United States. The control of pollutants discharged is established through effluent limitations and other requirements in NPDES permits. There are two principal bases for effluent limitations: 40 CFR Section 122.44(a) requires that permits include applicable technology-based limitations and standards; and 40 CFR Section 122.44(d) requires that permits include water quality-based effluent limitations to attain and maintain applicable numeric and narrative water quality criteria to protect the beneficial uses of the receiving water. Where numeric water quality objectives have not been established,three options exist to protect water quality: 1) 40 CFR Section 122.44(d) specifies that WQBELs may be established using USEPA criteria guidance under CWA section 304(a); 2) proposed State criteria or a State policy interpreting narrative criteria supplemented with other relevant information may be used; or 3) an indicator parameter may be established.

A. Discharge Prohibitions

Discharge Prohibitions in this Board Order are based on the Federal Clean Water Act, Basin Plan, State Water Resources Control Board's plans and policies, California Ocean Plan, and U.S. Environmental Protection Agency guidance and regulations.

B. Technology-Based Effluent Limitations

1. Scope and Authority

The CWA requires that technology-based effluent limitations be established based on several levels of controls:

a. Best practicable treatment control technology (BPT) represents the average of the best performance by plants within an industrial category or subcategory. BPT standards apply to toxic, conventional, and nonconventional pollutants.

b. Best available technology economically achievable (BAT) represents the best existing performance of treatment technologies that are economically achievable within an industrial point source category. BAT standards apply to toxic and nonconventional pollutants.

c. Best conventional pollutant control technology (BCT) represents the control from existing industrial point sources of conventional pollutants including BOD, TSS, fecal coliform, pH, and oil and grease. The BCT standard is established after considering the "cost reasonableness" of the relationship between the cost of attaining a reduction in effluent discharge and the benefits that would result, and also the cost effectiveness of additional industrial treatment beyond BPT.

d. New source performance standards (NSPS) represent the best available demonstrated control technology standards. The intent of NSPS guidelines is to set limitations that represent state-of-the-art treatment technology for new sources.

The CWA requires USEPA to develop effluent limitations, guidelines and standards (ELGs) representing application of BPT, BAT, BCT, and NSPS. Section 402(a)(1) of the CWA and 40 CFR Section 125.3 of the NPDES regulations authorize the use of best professional judgment (BPJ) to derive technology-based effluent limitations on a case-by-case basis where ELGs are not available for certain industrial categories and/or pollutants of concern. Where BPJ is used, the permit writer must consider specific factors outlined in 40 CFR Section 125.3.

2. Applicable Technology-Based Effluent Limitations

There is no specific treatment applied to the waste discharges except for pH adjustments. There are no applicable technology-based effluent limitations for this Facility.

C. Water Quality-Based Effluent Limitations (WQBELs)

1. Scope and Authority

As specified in 40 CFR Section 122.44(d)(1)(i), permits are required to include WQBELs for pollutants (including toxicity) that are or may be discharged at levels that cause, have reasonable potential to cause, or contribute to a receiving water excursion above any State water quality standard. The process for determining reasonable potential and calculating WQBELs when necessary is intended to protect the designated uses of the receiving water as specified in the Basin Plan and the Ocean Plan, and achieve applicable water quality objectives and criteria that are contained in other State plans and policies, or any applicable water quality criteria contained in the CTR and NTR.

2. Applicable Beneficial Uses and Water Quality Criteria and Objectives

All applicable beneficial uses are listed in Section III.C., above. The following water quality objectives listed below and taken from Table B, Page 7 of the California Ocean Plan were utilized to determine the effluent Limitations:

OBJECTIVES FOR THE PROTECTION OF AQUATIC LIFE				
Parameters	Limiting Concentrations			
	Units of Measurement	6-Month Median	Daily Maximum	Instantaneous maximum
Arsenic	µg/L	8	32	80.
Cadmium	µg/L	1	4.	10.
Chromium (Hexavalent)	µg/L	2	8.	20.
Copper	µg/L	3	12.	30.
Lead	µg/L	2	8.	20.
Mercury	µg/L	0.04	0.16	0.4
Nickel	µg/L	5	20.	50.
Selenium	µg/L	15	60.	150.
Silver	µg/L	0.7	2.8	7.
Zinc	µg/L	20.	80.	200.
Cyanide	µg/L	1.	4.	10.
Total Residual Chlorine	µg/L	2.	8.	60.
Ammonia (Expressed as Nitrogen)	µg/L	600.	2400.	6000.
Chronic Toxicity	TUc	N/A	1.	N/A
Phenolic Compounds (non-chlorinated)	µg/L	30	120.	300.
Chlorinated Phenolics	µg/L	1.	4.	10.

3. **Determining the need for WQBELs**

Since the Facility is new, no effluent data are presently available. Effluent limitations are established in this Order for those constituents for which effluent limitations are specified in the waste discharge requirements regulating the discharges from the AES HBGS. Effluent limits are established based on the water quality objectives listed in Table B, page 7 of the California Ocean Plan.

4. **WQBEL Calculations**

a. Concentration Calculation

Table B of the Ocean Plan includes water quality objectives for the protection of marine aquatic life and these objectives are used to establish effluent limits for discharges from this Facility.

The Ocean Plan takes into account the "minimum probable initial dilution" in determining effluent limitations for toxic pollutants. Initial dilution is the process that results in the rapid and irreversible turbulent mixing of wastewater with ocean water around the point of discharge. For the purposes of the Ocean Plan, minimum initial dilution is the lowest average initial dilution within any single month of the year. Dilution estimates must be based on observed waste flow characteristics, observed receiving water density structure, and the assumption that no currents of sufficient strength to influence the initial dilution process flow across the discharge structure. In March 1980, the State Board investigated the initial dilution factor for the power plant ocean outfalls throughout the State. The State Board assigned an "initial dilution" factor of 7.5:1 to AES (Huntington Beach generating station outfall). Since the Discharger is utilizing AES cooling water discharges and is discharging to the same outfall utilized by AES HBGS, it is appropriate to apply this dilution factor in establishing effluent limitations for discharges from this Facility.

To establish effluent limits for discharges from this Facility, a minimum probable initial dilution of 7.5 to 1 is used.

The following equation from Section III.C.4.a. of the Ocean Plan was used to calculate all concentration-based, effluent limitations (except for instantaneous maximum total residual chlorine).

$$Ce = Co + Dm (Co - Cs)$$

Where:
Ce = the effluent concentration limit, µg/L
Co = the concentration (water quality objective) to be met at the completion of initial dilution, µg/L

Cs = background seawater concentration, µg/L

Dm = minimum probable initial dilution expressed as parts seawater per part wastewater.

Background seawater concentration for all Table B parameters was assumed to be zero (Cs = 0), except for the following five parameters (see Table C, Page 14 of Ocean Plan)

Constituent	Background Seawater Concentration, Cs (µg/L)
Arsenic	3.
Copper	2.
Mercury	0.0005
Silver	0.16
Zinc	8.

Examples:

The following water quality objectives taken from Table B of ocean plan for copper, lead and total chlorine residual were used to establish effluent limits:

Pollutant	6-Month Median	Daily Maximum	Instantaneous Maximum
Copper (µg/L)	3	12	30
Lead (µg/L)	2	8	20
Total Chlorine Residual (µg/L)	2	8	60

Using the equation, Ce = Co + Dm (Co – Cs), effluent limitations are calculated:

- *Copper*

  Ce = 3 + 7.5 (3 – 2) = 11 µg/L (6-Month Median)
  Ce = 12 + 7.5 (12 – 2) = 87 µg/L (Daily Maximum)
  Ce = 30 + 7.5 (30 – 2) = 240 µg/L (Instantaneous Maximum)

- *Lead*

  Ce = 2 + 7.5 (2 – 0) = 17 µg/L (6-Month Median)
  Ce = 8 + 7.5 (8 - 0) = 68 µg/L (Daily Maximum)
  Ce = 20 + 7.5 (20 – 0) = 170 µg/L (Instantaneous Maximum)

Parameter	Units	6-Month Median	Daily Maximum	Instantaneous Maximum
Copper	µg/L	11	87	240
	lbs/day	5	41	----
Lead	µg/L	17	68	170
	lbs/day	8	32	----
Mercury	µg/L	0.34	1.36	3.4
	lbs/day	0.16	0.64	----
Nickel	µg/L	43	170	425
	lbs/day	20	80	----
Silver	µg/L	4.75	23	58
	lbs/day	2	11	----
Zinc	µg/L	110	620	1640
	lbs/day	52	293	----
Cyanide	µg/L	9	34	85
	lbs/day	4	16	----
Total Chlorine Residual	µg/L	17	68	510
	lbs/day	8	32	241
Ammonia-Nitrogen	µg/L	5,100	20,400	51,000
	lbs/day	2407	9628	----
Chronic Toxicity (See IV.A.2., below)	TUc	----	8.5	----
Phenolic Compounds (non-chlorinated)	µg/L	255	1,020	2,550
	lbs/day	120	481	----
Chlorinated Phenolics	µg/L	8.5	34	85
	lbs/day	4	16	----

5. Discharge Flow Limitation

The Order includes a requirement to reduce discharge flow proportionately with the AES HBGS power plant intake pumps flow when the total daily average flow of the power plant intake pumps is reduced to less than 126.7 MGD. This limitation will allow the salinity of the mixed discharge flow to be maintained at a constant level, and the salinity of the discharge of the mixed flow outside of the zone of initial dilution to never exceed 40 ppt. Under this requirement, if the power plant intake pumps are shut down, then the desalination plant will be shut down.

"The multiplier factor of 0.447 is based on 56.59 MGD divided by 126.7 MGD. The Discharger conducted studies and determined that at power plant intake flow of 126.7 and Discharger discharge flow at 56.59 MGD are the critical flow conditions that will result in the salinity of the discharge of the mixed flow outside of the zone of initial dilution to never exceed 40 ppt. The 56.59 MGD flow includes a maximum of 50 MGD of concentrated seawater, 6.3 MGD of backwash water (salinity same as seawater), and 0.29 MGD of rinse water."

6. **Whole Effluent Toxicity (WET)**

Based on the water quality objectives listed in Table B of the Ocean Plan, the daily maximum concentration for chronic toxicity is as follows:

Constituent	Units of Measurements	Daily Maximum
Chronic Toxicity	TUc	1

Calculations for Chronic Toxicity:

The equation is:

Ce = Co + Dm (Co – Cs), effluent limitation is calculated as
Ce = 1 + 7.5 (1 - 0) = 8.5 TUc (Daily Maximum)

D. Interim Effluent Limitations (Not Applicable)

E. Land Discharge Specifications (Not Applicable)

F. Reclamation Specifications (Not Applicable)

V. RATIONALE FOR RECEIVING WATER LIMITATIONS

A. Surface Water

Receiving water limitations are based on water quality objectives contained in the Ocean Plan. As such, they are a required part in this Order.

The proposed mass effluent limits in 4.c., above are based on a daily wastewater flow of 50 million gallons of desalination effluent to the ocean.

B. Groundwater (Not Applicable)

VI. RATIONALE FOR MONITORING AND REPORTING REQUIREMENTS

Section 122.48 of 40 CFR requires all NPDES permits to specify recording and reporting of monitoring results. Sections 13267 and 13383 of the California Water Code authorize the Water Boards to require technical and monitoring reports. The Monitoring and Reporting Program, Attachment E of this Order, establishes monitoring and reporting requirements to implement federal and state requirements. The following provides the rationale for the monitoring and reporting requirements contained in the Monitoring and Reporting Program for this Facility.

A. Influent Monitoring

The Discharger is required to conduct quarterly influent monitoring for the first year and yearly thereafter. This is to establish a baseline water quality of the intake water. This intake water is also monitored by AES HBGS as required by the NPDES permit issued to AES for discharges of once through cooling water. The Discharger may use the AES effluent monitoring data to comply with the influent monitoring requirement of this Order.

B. Effluent Monitoring

The Discharger is required to conduct monitoring of the permitted discharges in order to evaluate compliance with permit conditions. Monitoring requirements are given in the proposed monitoring and reporting program (Attachment E). This provision requires compliance with the monitoring and reporting program, and is based on 40 CFR 122.44(i), 122.62, 122.63 and 124.5. The self-monitoring program (SMP) is a standard requirement in all NPDES permits (including this proposed Order) issued by the Regional Water Board.

In addition to containing definitions of terms, it specifies general sampling/analytical protocols and the requirements for reporting of spills, violations, and routine monitoring data in accordance with NPDES regulations, the California Water Code, and Regional Water Board's policies. The monitoring and reporting program also contains a sampling program specific to the Discharger's treatment facility. It defines the sampling stations and frequency, pollutants to be monitored, and additional reporting requirements. Pollutants to be monitored include all pollutants for which effluent limitations are specified.

Although the Discharger will be discharging wastewater at one discharge point into the ocean outfall of AES, due to intermittent discharges of in-plant waste streams (RO treatment wastewater, filter backwash wastewater, R0 flush wastewater), monitoring of these waste streams will be necessary to assure that discharges will meet water quality standards. The Discharger is required to conduct monitoring for certain constituents when in-plant waste streams (RO treatment wastewater, filter backwash wastewater, R0 flush wastewater) are discharged.

C. Whole Effluent Toxicity Testing

Whole effluent toxicity (WET) testing protects the receiving water quality from the aggregate toxic effect of a mixture of pollutants in the effluent. WET tests measure the degree of response of exposed aquatic test organisms to an effluent. The WET approach allows for protection of the narrative "no toxics in toxic amounts" criterion while implementing numeric criteria for toxicity. There are two types of WET tests: acute and chronic. An acute toxicity test is conducted over a shorter time period and measures mortality. A chronic toxicity test is conducted over a longer period of time and may measure mortality, reproduction, and growth.

The Basin Plan specifies a narrative objective for toxicity, requiring that all waters be maintained free of toxic substances in concentrations that are lethal to or produce other detrimental response on aquatic organisms. Detrimental response includes but is not limited to decreased growth rate, decreased reproductive success of resident or indicator species, and/or significant alterations in population, community ecology, or receiving water biota.

This Order requires the Discharger to conduct chronic toxicity testing of the effluent on a monthly basis. The Order also requires the Discharger to conduct an Initial Investigation Toxicity Reduction Evaluation (IITRE) program when either the two-month median of toxicity test results exceeds 8.5 TUc or any single test exceeds 14.5 TUc for survival endpoint. Based on the results of this investigation program and at the discretion of the Executive Officer, a more rigorous Toxicity Reduction Evaluation/Toxicity Identification Evaluation (TRE/TIE) may be required.

D. Receiving Water Monitoring

1. Surface Water

   The receiving water monitoring program shall consist of biological surveys of the area surrounding the discharge, and shall include studies of the physical-chemical and biological characteristics of the receiving water that may be impacted by the discharge.

2. Groundwater (Not Applicable)

E. Other Monitoring Requirements (Not Applicable)

VII. RATIONALE FOR PROVISIONS

A. Standard Provisions

Standard Provisions, which in accordance with 40 CFR Sections 122.41and 122.42, apply to all NPDES discharges and must be included in every NPDES permit, are provided in Attachment D to the Order.

Title 40 CFR Section 122.41(a)(1) and (b) through (n) establish conditions that apply to all state-issued NPDES permits. These conditions must be incorporated into the permits either expressly or by reference. If incorporated by reference, a specific citation to the regulations must be included in the Order. 40 CFR Section 123.25(a)(12) allows the State to omit or modify conditions to impose more stringent requirements. In accordance with Section 123.25, this Order omits federal conditions that address enforcement authority specified in 40 CFR Sections 122.41(j)(5) and (k)(2) because the enforcement authority under the CWC is more stringent. In lieu of these conditions, this Order incorporates by reference CWC Section 13387(e).

B. Special Provisions

1. Reopener Provisions

This provision is based on 40 CFR Part 123. The Regional Water Board may reopen the permit to modify permit conditions and requirements. Causes for modifications include the promulgation of new regulations, modification in sludge use or disposal practices, or adoption of new regulations by the State Board or Regional Water Board, including revisions to the Basin Plan.

2. Special Studies and Additional Monitoring Requirements

   a. Toxicity Identification Evaluations or Toxicity Reduction Evaluations. This provision is based on the SIP, Section 4, Toxicity Control Provisions.

3. Best Management Practices and Pollution Prevention

In accordance with Section 402 (p) of the Federal Clean Water Act, EPA published the final regulations for storm water runoff on November 16, 1990 (40 CFR Parts 122, 123 and 124). Industrial facilities, including POTW sites, are required to obtain NPDES Permits for storm water discharges. On April 17, 1997, the State Board adopted a General Industrial Storm Water Permit, Order No. 97-03-DWQ, NPDES No. CAS000001. This Order includes pertinent provisions of the General Industrial Storm Water Permit appropriate for this discharge.

4. Compliance Schedules (Not Applicable)

5. Special Provisions for Municipal Facilities (Not Applicable)

6. Other Special Provisions (Not Applicable)

VIII. PUBLIC PARTICIPATION

The California Regional Water Quality Control Board, Santa Ana Region (Regional Water Board) is considering the issuance of waste discharge requirements (WDRs) that will serve as a National Pollutant Discharge Elimination System (NPDES) permit for the Poseidon Resources (Surfside) L.L.C.'s Poseidon Seawater Desalination Facility. As a step in the WDR adoption process, the Regional Water Board staff has developed tentative WDRs. The Regional Water Board encourages public participation in the WDR adoption process.

A. Notification of Interested Parties

The Regional Water Board has notified the Discharger and interested agencies and persons of its intent to prescribe waste discharge requirements for the discharge and has provided them with an opportunity to submit their written comments and recommendations. Notification was provided through: posting of the Notice of Public Hearing at the City Hall and publication of the Notice in the local newspaper; and posting the Notice and draft Order on the Regional Water Board website: http://www.waterboards.ca.gov/santaana on June 26, 2006.

B. Written Comments

The staff determinations are tentative. Interested persons are invited to submit written comments concerning these tentative WDRs. Comments should be submitted either in person or by mail to the Executive Office at the Regional Water Board at the address above on the cover page of this Order.

To be fully responded to by staff and considered by the Regional Water Board, written comments should be received at the Regional Water Board offices by 5:00 p.m. on August 7, 2006.

C. Public Hearing

The Regional Water Board will hold a public hearing on the tentative WDRs during its regular Board meeting on the following date and time and at the following location:

Date:	August 25, 2006
Time:	9:00 a.m.
Location:	Orange County Sanitation District 10844 Ellis Avenue Fountain Valley

Interested persons are invited to attend. At the public hearing, the Regional Water Board will hear testimony, if any, pertinent to the discharge, WDRs, and permit. Oral testimony will be heard; however, for accuracy of the record, important testimony should be in writing.

Please be aware that dates and venues may change. Our web address is www.waterboards.ca.gov/santaana where you can access the current agenda for changes in dates and locations.

D. Waste Discharge Requirements Petitions

Any aggrieved person may petition the State Water Resources Control Board to review the decision of the Regional Water Board regarding the final WDRs. The petition must be submitted within 30 days of the Regional Water Board's action to the following address:

State Water Resources Control Board
Office of Chief Counsel
P.O. Box 100, 1001 I Street
Sacramento, CA 95812-0100

E. Information and Copying

The Report of Waste Discharge (RWD), related documents, tentative effluent limitations and special provisions, comments received, and other information are on file and may be inspected at the address above at any time between 8:30 a.m. and 4:45 p.m., Monday through Friday. Copying of documents may be arranged through the Regional Water Board by calling (951) 782-4130.

F. Register of Interested Persons

Any person interested in being placed on the mailing list for information regarding the WDRs and NPDES permit should contact the Regional Water Board, reference this Facility, and provide a name, address, and phone number.

G. Additional Information

Requests for additional information or questions regarding this Order should be directed to J. Shami at (951) 782-3288.

ATTACHMENT G– MINIMUM LEVELS, IN PPB (µG/L)

The Minimum* Levels identified in this appendix represent the lowest concentration of a pollutant that can be quantitatively measured in a sample given the current state of performance in analytical chemistry methods in California. These Minimum* Levels were derived from data provided by state-certified analytical laboratories in 1997 and 1998 for pollutants regulated by the California Ocean Plan and shall be used until new values are adopted by the SWRCB. There are four major chemical groupings: volatile chemicals, semi-volatile chemicals, inorganics, pesticides & PCB's. "No Data" is indicated by "--".

TABLE II-1
MINIMUM* LEVELS – VOLATILE CHEMICALS

		Minimum* Level (ug/L)	
Volatile Chemicals	**CAS Number**	**GC Method [a]**	**GCMS Method [b]**
Acrolein	107028	2.	5
Acrylonitrile	107131	2.	2
Benzene	71432	0.5	2
Bromoform	75252	0.5	2
Carbon Tetrachloride	56235	0.5	2
Chlorobenzene	108907	0.5	2
Chlorodibromomethane	124481	0.5	2
Chloroform	67663	0.5	2
1,2-Dichlorobenzene (volatile)	95501	0.5	2
1,3-Dichlorobenzene (volatile)	541731	0.5	2
1,4-Dichlorobenzene (volatile)	106467	0.5	2
Dichlorobromomethane	75274	0.5	2
1,1-Dichloroethane	75343	0.5	1
1,2-Dichloroethane	107062	0.5	2
1,1-Dichloroethylene	75354	0.5	2
Dichloromethane	75092	0.5	2
1,3-Dichloropropene (volatile)	542756	0.5	2
Ethyl benzene	100414	0.5	2
Methyl Bromide	74839	1.	2
Methyl Chloride	74873	0.5	2
1,1,2,2-Tetrachloroethane	79345	0.5	2
Tetrachloroethylene	127184	0.5	2
Toluene	108883	0.5	2
1,1,1-Trichloroethane	71556	0.5	2
1,1,2-Trichloroethane	79005	0.5	2
Trichloroethylene	79016	0.5	2
Vinyl Chloride	75014	0.5	2

Table II-1 Notes

a) GC Method = Gas Chromatography
b) GCMS Method = Gas Chromatography / Mass Spectrometry
* To determine the lowest standard concentration in an instrument calibration curve for these techniques, use the given ML (see Chapter III, "Use of Minimum* Levels").

TABLE II-2
MINIMUM* LEVELS – SEMI VOLATILE CHEMICALS

		Minimum* Level (ug/L)			
Semi-Volatile Chemicals	**CAS Number**	**GC Method [a,*]**	**GCMS Method [b,*]**	**HPLC Method [c,*]**	**COLOR Method [d]**
Acenapthylene	208968	--	10	0.2	--
Anthracene	120127	--	10	2	--
Benzidine	92875	--	5	--	--
Benzo(a)anthracene	56553	--	10	2	--
Benzo(a)pyrene	50328	--	10	2	--
Benzo(b)fluoranthene	205992	--	10	10	--
Benzo(g,h,i)perylene	191242	--	5	0.1	--
Benzo(k)floranthene	207089	--	10	2	--
Bis 2-(1-Chloroethoxy) methane	111911	--	5	--	--
Bis(2-Chloroethyl)ether	111444	10	1	--	--
Bis(2-Chloroisopropyl)ether	39638329	10	2	--	--
Bis(2-Ethylhexyl) phthalate	117817	10	5	--	--
2-Chlorophenol	95578	2	5	--	--
Chrysene	218019	--	10	5	--
Di-n-butyl phthalate	84742	--	10	--	--
Dibenzo(a,h)anthracene	53703	--	10	0.1	--
1,2-Dichlorobenzene (semivolatile)	95504	2	2	--	--
1,3-Dichlorobenzene (semivolatile)	541731	2	1	--	--
1,4-Dichlorobenzene (semivolatile)	106467	2	1	--	--
3,3-Dichlorobenzidine	91941	--	5	--	--
2,4-Dichlorophenol	120832	1	5	--	--
1,3-Dichloropropene	542756	--	5	--	
Diethyl phthalate	84662	10	2	--	--
Dimethyl phthalate	131113	10	2	--	--
2,4-Dimethylphenol	105679	1	2	--	--
2,4-Dinitrophenol	51285	5	5	--	--
2,4-Dinitrotoluene	121142	10	5	--	--
1,2-Diphenylhydrazine	122667	--	1	--	--
Fluoranthene	206440	10	1	0.05	--
Fluorene	86737	--	10	0.1	--
Hexachlorobenzene	118741	5	1	--	--
Hexachlorobutadiene	87683	5	1	--	--
Hexachlorocyclopentadiene	77474	5	5	--	--

Semi-Volatile Chemicals	CAS Number	GC Method [a,*]	GCMS Method [b,*]	HPLC Method [c,*]	COLOR Method [d]
Hexachloroethane	67721	5	1	--	--
Indeno(1,2,3-cd)pyrene	193395	--	10	0.05	--
Isophorone	78591	10	1	--	--
2-methyl-4,6-dinitrophenol	534521	10	5	--	--
3-methyl-4-chlorophenol	59507	5	1	--	--
N-nitrosodi-n-propylamine	621647	10	5	--	--
N-nitrosodimethylamine	62759	10	5	--	--
N-nitrosodiphenylamine	86306	10	1	--	--
Nitrobenzene	98953	10	1	--	--
2-Nitrophenol	88755	--	10	--	--
4-Nitrophenol	100027	5	10	--	--
Pentachlorophenol	87865	1	5	--	--
Phenanthrene	85018	--	5	0.05	--
Phenol	108952	1	1	--	50
Pyrene	129000	--	10	0.05	--
2,4,6-Trichlorophenol	88062	10	10	--	--

Table II-2 Notes:

a) GC Method = Gas Chromatography
b) GCMS Method = Gas Chromatography / Mass Spectrometry
c) HPLC Method = High Pressure Liquid Chromatography
d) COLOR Method= Colorimetric

* To determine the lowest standard concentration in an instrument calibration curve for this technique, multiply the given ML by 1000 (see Chapter III, "Use of Minimum* Levels").

Inorganic Substances	CAS Number	COLOR Method[a]	DCP Method[b]	FAA Method[c]	GFAA Method[d]	HYDRIDE Method[e]	ICP Method[f]	ICPMS Method[g]	SPGFAA Method[h]	CVAA Method[i]
Antimony	7440360	--	1000.	10.	5.	0.5	50.	0.5	5.	--
Arsenic	7440382	20.	1000.	--	2.	1.	10.	2.	2.	--
Beryllium	7440417	--	1000.	20.	0.5	--	2.	0.5	1.	--
Cadmium	7440439	--	1000.	10.	0.5	--	10.	0.2	0.5	--
Chromium (total)	--	--	1000.	50.	2.	--	10.	0.5	1.	--
Chromium (VI)	18540299	10.	--	5.	--	--	--	--	--	--
Copper	7440508	--	1000.	20.	5.	--	10.	0.5	2.	--
Cyanide	57125	5.	--	--	--	--	--	--	--	--
Lead	7439921	--	10000.	20.	5.	--	5.	0.5	2.	--
Mercury	7439976	--	--	--	--	--	--	0.5	--	0.2
Nickel	7440020	--	1000.	50.	5.	--	20.	1.	5.	--
Selenium	7782492	--	1000.	--	5.	1.	10.	2.	5.	--
Silver	7440224	--	1000.	10.	1.	--	10.	0.2	2.	--
Thallium	7440280	--	1000.	10.	2.	--	10.	1.	5.	--
Zinc	7440666	--	1000.	20.	--	--	20.	1.	10.	--

Table II-3 Notes

a) COLOR Method = Colorimetric
b) DCP Method = Direct Current Plasma
c) FAA Method = Flame Atomic Absorption
d) GFAA Method = Graphite Furnace Atomic Absorption
e) HYDRIDE Method = Gaseous Hydride Atomic Absorption
f) ICP Method = Inductively Coupled Plasma
g) ICPMS Method = Inductively Coupled Plasma / Mass Spectrometry
h) SPGFAA Method = Stabilized Platform Graphite Furnace Atomic Absorption (i.e., US EPA 200.9)
i) CVAA Method = Cold Vapor Atomic Absorption

* To determine the lowest standard concentration in an instrument calibration curve for these techniques, use the given ML (see Chapter III, "Use of Minimum* Levels").

TABLE II-4
MINIMUM* LEVELS – PESTICIDES AND PCBs

Pesticides – PCB's	CAS Number	Minimum* Level (ug/L) GC Method[a,*]
Aldrin	309002	0.005
Chlordane	57749	0.1
4,4'-DDD	72548	0.05
4,4'-DDE	72559	0.05
4,4'-DDT	50293	0.01
Dieldrin	60571	0.01
a-Endosulfan	959988	0.02
b-Endosulfan	33213659	0.01
Endosulfan Sulfate	1031078	0.05
Endrin	72208	0.01
Heptachlor	76448	0.01
Heptachlor Epoxide	1024573	0.01
a-Hexachlorocyclohexane	319846	0.01
b-Hexachlorocyclohexane	319857	0.005
d-Hexachlorocyclohexane	319868	0.005
g-Hexachlorocyclohexane (Lindane)	58899	0.02
PCB 1016	--	0.5
PCB 1221	--	0.5
PCB 1232	--	0.5
PCB 1242	--	0.5
PCB 1248	--	0.5
PCB 1254	--	0.5
PCB 1260	--	0.5
Toxaphene	8001352	0.5

Table II-4 Notes

a) GC Method = Gas Chromatography

* To determine the lowest standard concentration in an instrument calibration curve for this technique, multiply the given ML by 100 (see Chapter III, "Use of Minimum* Levels").

ATTACHMENT H – EPA PRIORITY POLLUTANT LIST

CTR Number	Parameter	CAS Number	Suggested Analytical Methods
1	Antimony	7440360	EPA 6020/200.8
2	Arsenic	7440382	EPA 1632
3	Beryllium	7440417	EPA 6020/200.8
4	Cadmium	7440439	EPA 1638/200.8
5a	Chromium (III)	16065831	EPA 6020/200.8
5a	Chromium (VI)	18540299	EPA 7199/1636
6	Copper	7440508	EPA 6020/200.8
7	Lead	7439921	EPA 1638
8	Mercury	7439976	EPA 1669/1631
9	Nickel	7440020	EPA 6020/200.8
10	Selenium	7782492	EPA 6020/200.8
11	Silver	7440224	EPA 6020/200.8
12	Thallium	7440280	EPA 6020/200.8
13	Zinc	7440666	EPA 6020/200.8
14	Cyanide	57125	EPA 9012A
15	Asbestos	1332214	EPA/600/R-93/116(PCM)
16	2,3,7,8-TCDD	1746016	EPA 8290 (HRGC) MS
17	Acrolein	107028	EPA 8260B
18	Acrylonitrile	107131	EPA 8260B
19	Benzene	71432	EPA 8260B
20	Bromoform	75252	EPA 8260B
21	Carbon Tetrachloride	56235	EPA 8260B
22	Chlorobenzene	108907	EPA 8260B
23	Chlorodibromomethane	124481	EPA 8260B
24	Chloroethane	75003	EPA 8260B
25	2-Chloroethylvinyl Ether	110758	EPA 8260B
26	Chloroform	67663	EPA 8260B
27	Dichlorobromomethane	75274	EPA 8260B
28	1,1-Dichloroethane	75343	EPA 8260B
29	1,2-Dichloroethane	107062	EPA 8260B
30	1,1-Dichloroethylene	75354	EPA 8260B
31	1,2-Dichloropropane	78875	EPA 8260B
32	1,3-Dichloropropylene	542756	EPA 8260B
33	Ethylbenzene	100414	EPA 8260B
34	Methyl Bromide	74839	EPA 8260B
35	Methyl Chloride	74873	EPA 8260B
36	Methylene Chloride	75092	EPA 8260B
37	1,1,2,2-Tetrachloroethane	79345	EPA 8260B
38	Tetrachloroethylene	127184	EPA 8260B
39	Toluene	108883	EPA 8260B
40	1,2-Trans-Dichloroethylene	156605	EPA 8260B
41	1,1,1-Trichloroethane	71556	EPA 8260B

CTR Number	Parameter	CAS Number	Suggested Analytical Methods
42	1,12-Trichloroethane	79005	EPA 8260B
43	Trichloroethylene	79016	EPA 8260B
44	Vinyl Chloride	75014	EPA 8260B
45	2-Chlorophenol	95578	EPA 8270C
46	2,4-Dichlorophenol	120832	EPA 8270C
47	2,4-Dimethylphenol	105679	EPA 8270C
48	2-Methyl-4,6-Dinitrophenol	534521	EPA 8270C
49	2,4-Dinitrophenol	51285	EPA 8270C
50	2-Nitrophenol	88755	EPA 8270C
51	4-Nitrophenol	100027	EPA 8270C
52	3-Methyl-4-Chlorophenol	59507	EPA 8270C
53	Pentachlorophenol	87865	EPA 8270C
54	Phenol	108952	EPA 8270C
55	2,4,6-Trichlorophenol	88062	EPA 8270C
56	Acenaphthene	83329	EPA 8270C
57	Acenaphthylene	208968	EPA 8270C
58	Anthracene	120127	EPA 8270C
59	Benzidine	92875	EPA 8270C
60	Benzo(a)Anthracene	56553	EPA 8270C
61	Benzo(a)Pyrene	50328	EPA 8270C
62	Benzo(b)Fluoranthene	205992	EPA 8270C
63	Benzo(ghi)Perylene	191242	EPA 8270C
64	Benzo(k)Fluoranthene	207089	EPA 8270C
65	Bis(2-Chloroethoxy)Methane	111911	EPA 8270C
66	Bis(2-Chloroethyl)Ether	111444	EPA 8270C
67	Bis(2-Chloroisopropyl)Ether	108601	EPA 8270C
68	Bis(2-Ethylhexyl)Phthalate	117817	EPA 8270C
69	4-Bromophenyl Phenyl Ether	101553	EPA 8270C
70	Butylbenzyl Phthalate	85687	EPA 8270C
71	2-Chloronaphthalene	91587	EPA 8270C
72	4-Chlorophenyl Phenyl Ether	7005723	EPA 8270C
73	Chrysene	218019	EPA 8270C
74	Dibenzo(a,h)Anthracene	53703	EPA 8270C
75	1,2-Dichlorobenzene	95501	EPA 8260B
76	1,3-Dichlorobenzene	541731	EPA 8260B
77	1,4-Dichlorobenzene	106467	EPA 8260B
78	3,3'-Dichlorobenzidine	91941	EPA 8270C
79	Diethyl Phthalate	84662	EPA 8270C
80	Dimethyl Phthalate	131113	EPA 8270C
81	Di-n-Butyl Phthalate	84742	EPA 8270C
82	2,4-Dinitrotoluene	121142	EPA 8270C
83	2,6-Dinitrotoluene	606202	EPA 8270C
84	Di-n-Octyl Phthalate	117840	EPA 8270C
85	1,2-Diphenylhydrazine	122667	EPA 8270C
86	Fluoranthene	206440	EPA 8270C
87	Fluorene	86737	EPA 8270C
88	Hexachlorobenzene	118741	EPA 8260B
89	Hexachlorobutadiene	87863	EPA 8260B

CTR Number	Parameter	CAS Number	Suggested Analytical Methods
90	Hexachlorocyclopentadiene	77474	EPA 8270C
91	Hexachloroethane	67721	EPA 8260B
92	Indeno(1,2,3-cd)Pyrene	193395	EPA 8270C
93	Isophorone	78591	EPA 8270C
94	Naphthalene	91203	EPA 8260B
95	Nitrobenzene	98953	EPA 8270C
96	N-Nitrosodimethylamine	62759	EPA 8270C
97	N-Nitrosodi-n-Propylamine	621647	EPA 8270C
98	N-Nitrosodiphenylamine	86306	EPA 8270C
99	Phenanthrene	85018	EPA 8270C
100	Pyrene	129000	EPA 8270C
101	1,2,4-Trichlorobenzene	120821	EPA 8260B
102	Aldrin	309002	EPA 8081A
103	alpha-BHC	319846	EPA 8081A
104	beta-BHC	319857	EPA 8081A
105	gamma-BHC	58899	EPA 8081A
106	delta-BHC	319868	EPA 8081A
107	Chlordane	57749	EPA 8081A
108	4,4'-DDT	50293	EPA 8081A
109	4,4'-DDE	72559	EPA 8081A
110	4,4'-DDD	72548	EPA 8081A
111	Dieldrin	60571	EPA 8081A
112	alpha-Endosulfan	959988	EPA 8081A
113	beta-Endosulfan	33213659	EPA 8081A
114	Endosulfan Sulfate	1031078	EPA 8081A
115	Endrin	72208	EPA 8081A
116	Endrin Aldehyde	7421934	EPA 8081A
117	Heptachlor	76448	EPA 8081A
118	Heptachlor Epoxide	1024573	EPA 8081A
119	PCB-1016	12674112	EPA 8082
120	PCB-1221	11104282	EPA 8082
121	PCB-1232	11141165	EPA 8082
122	PCB-1242	53469219	EPA 8082
123	PCB-1248	12672296	EPA 8082
124	PCB-1254	11097691	EPA 8082
125	PCB-1260	11096825	EPA 8082
126	Toxaphene	8001352	EPA 8081A

ATTACHMENT I – PRACTICAL QUANTITATION LEVELS FOR COMPLIANCE

PRACTICAL QUANTITATION LEVELS FOR COMPLIANCE DETERMINATION

	Constituent	PQL µg/l	Analysis Method
1	Arsenic	7.5	GF/AA
2	Barium	20.0	ICP/GFAA
3	Cadmium	15.0	ICP
4	Chromium (VI)	15.0	ICP
5	Cobalt	10.0	GF/AA
6	Copper	19.0	GF/ICP
7	Cyanide	50.0	335.2/335.3
8	Iron	100.0	ICP
9	Lead	26.0	GF/AA
10	Manganese	20.0	ICP
11	Mercury	0.50	CV/AA
12	Nickel	50.0	ICP
13	Selenium	2.0	EPA Method 1638, 1640 or 7742
14	Silver	16.0	ICP
15	Zinc	20.0	ICP
16	1,2 - Dichlorobenzene	5.0	601/602/624
17	1,3 - Dichlorobenzene	5.0	601
18	1,4 - Dichlorobenzene	5.0	601
18	2,4 - Dichlorophenol	10.0	604/625
20	4 - Chloro -3-methylphenol	10.0	604/625
21	Aldrin	0.04	608
22	Benzene	1.0	602/624
23	Chlordane	0.30	608
24	Chloroform	5.0	601/624
25	DDT	0.10	608
26	Dichloromethane	5.0	601/624
27	Dieldrin	0.10	608
28	Fluorantene	10.0	610/625
29	Endosulfan	0.50	608
30	Endrin	0.10	608
31	Halomethanes	5.0	601/624
32	Heptachlor	0.03	608
33	Hepthachlor Epoxide	0.05	608
34	Hexachlorobenzene	10.0	625
35	Hexachlorocyclohexane		
	Alpha	0.03	608
	Beta	0.03	608
	Gamma	0.03	608
36	PAH's	10.0	610/625
37	PCB	1.0	608
38	Pentachlorophenol	10.0	604/625
39	Phenol	10.0	604/625
40	TCDD Equivalent	0.05	8280
41	Toluene	1.0	602/625
42	Toxaphene	2.0	608
43	Tributyltin	0.02	GC
44	2,4,6-Trichlorophenol	10.0	604/625

ATTACHMENT J - STORM WATER POLLUTION PREVENTION PLAN REQUIREMENTS

1. *Implementation Schedule*

The storm water pollution prevention plan (SWPPP) shall be prepared and/or updated and implemented in a timely manner, but in no case later than 90 days before start of operation.

2. *Objectives*

The SWPPP has two major objectives: (a) to identify and evaluate sources of pollutants associated with industrial activities that may affect the quality of storm water discharges and authorized non-storm water discharges from the facility; and (b) to identify and implement site-specific best management practices (BMPs) to reduce or prevent pollutants associated with industrial activities in storm water discharges and authorized non-storm water discharges. BMPs may include a variety of pollution prevention measures or other low-cost pollution control measures. They are generally categorized as non-structural BMPs (activity schedules, prohibitions of practices, maintenance procedures, and other low-cost measures) and as structural BMPs (treatment measures, run-off controls, over-head coverage). To achieve these objectives, dischargers should consider the five phase process for SWPPP development and implementation as shown in Table A, below.

The SWPPP requirements are designed to be sufficiently flexible to meet the various needs of the facility. SWPPP requirements that are not applicable to the facility should not be included in the SWPPP.

A facility's SWPPP is a written document that shall contain a compliance activity schedule, a description of industrial activities and pollutant sources, descriptions of BMPs, drawings, maps, and relevant copies or references of parts of other plans. The SWPPP shall be revised whenever appropriate and shall be readily available for review by facility employees or Regional Water Board inspectors.

3. *Planning and Organization*

a. Pollution Prevention Team

The SWPPP shall identify a specific individual or individuals and their positions within the facility organization as members of a storm water pollution prevention team responsible for developing the SWPPP, assisting the facility manager in SWPPP implementation and revision, and conducting all monitoring program activities required in the Stormwater monitoring program of Order No. R8-2006-0034. The SWPPP shall clearly identify the storm water pollution prevention related responsibilities, duties, and activities of each team member.

b. Review Other Requirements and Existing Facility Plans

The SWPPP may incorporate or reference the appropriate elements of other regulatory requirements. The discharger shall review all local, state, and federal requirements that impact, complement, or are consistent with the requirements of Order No. R8-2006-0034. The discharger shall identify any existing facility plans that contain storm water pollutant control measures or relate to the requirements of Order No. R8-2006-0034. As examples, dischargers whose facilities are subject to Federal Spill Prevention Control and Countermeasures' requirements should already have instituted a plan to control spills of certain hazardous materials. Similarly, the discharger whose facilities are subject to air quality related permits and regulations may already have evaluated industrial activities that generate dust or particulates.

4. *Site Map*

The SWPPP shall include a site map. The site map shall be provided on an 8-1/2 x 11 inch or larger sheet and include notes, legends, and other data as appropriate to ensure that the site map is clear and understandable. If necessary, the discharger may provide the required information on multiple site maps. The following information shall be included on the site map:

a. The facility boundaries; the outline of all storm water drainage areas within the facility boundaries; portions of the drainage area impacted by run-on from surrounding areas; and direction of flow of each drainage area, on-site surface water bodies, and areas of soil erosion. The map shall also identify nearby water bodies (such as rivers, lakes, ponds) and municipal storm drain inlets where the facility's storm water discharges and authorized non-storm water discharges may be received.

b. The location of the storm water collection and conveyance system, associated points of discharge, and direction of flow. Include any structural control measures that affect storm water discharges, authorized non-storm water discharges, and run-on. Examples of structural control measures are catch basins, berms, detention ponds, secondary containment, oil/water separators, diversion barriers, etc.

c. An outline of all impervious areas of the facility, including paved areas, buildings, covered storage areas, or other roofed structures.

d. Locations where materials are directly exposed to precipitation and the locations where significant spills or leaks identified in Section 6.a.(4)., below, have occurred.

e. Areas of industrial activity. This shall include the locations of all storage areas and storage tanks, shipping and receiving areas, fueling areas, vehicle and equipment storage/maintenance areas, material handling and processing areas, waste treatment and disposal areas, dust or particulate generating areas, cleaning and rinsing areas, and other areas of industrial activity which are potential pollutant sources.

5. *List of Significant Materials*

The SWPPP shall include a list of significant materials handled and stored at the site. For each material on the list, describe the locations where the material is being stored, received, shipped, and handled, as well as the typical quantities and frequency. Materials shall include raw materials, intermediate products, final or finished products, recycled materials, and waste or disposed materials.

6. *Description of Potential Pollutant Sources*

a. The SWPPP shall include a narrative description of the facility's industrial activities, as identified in Section 4.e., above, associated potential pollutant sources, and potential pollutants that could be discharged in storm water discharges or authorized non-storm water discharges. At a minimum, the following items related to a facility's industrial activities shall be considered:

(1) Industrial Processes

Describe each industrial process, the type, characteristics, and quantity of significant materials used in or resulting from the process, and a description of the processes (manufacturing or treatment), cleaning, rinsing, recycling, disposal, or other activities related to the process. Where applicable, areas protected by containment structures and the corresponding containment capacity shall be described.

(2) Material Handling and Storage Areas

Describe each handling and storage area, type, characteristics, and quantity of significant materials handled or stored, description of the shipping, receiving, and loading procedures, and the spill or leak prevention and response procedures. Where applicable, areas protected by containment structures and the corresponding containment capacity shall be described.

(3) Dust and Particulate Generating Activities

Describe all industrial activities that generate dust or particulates that may be deposited within the facility's boundaries and identify their discharge locations; the characteristics of dust and particulate pollutants; the approximate quantity of dust and particulate pollutants that may be deposited within the facility boundaries; and a description of the primary areas of the facility where dust and particulate pollutants would settle.

(4) Significant Spills and Leaks

Describe materials that have spilled or leaked in significant quantities in storm water discharges or non-storm water discharges. Include toxic chemicals (listed in 40 Code of Federal Regulations [CFR] Part 302) that have been discharged to storm water as reported on U.S. Environmental Protection Agency (U.S. EPA) Form R, and oil and

hazardous substances in excess of reportable quantities (see 40 CFR, Parts 110, 117, and 302).

The description shall include the type, characteristics, and approximate quantity of the material spilled or leaked, the cleanup or remedial actions that have occurred or are planned, the approximate remaining quantity of materials that may be exposed to storm water or non-storm water discharges, and the preventative measures taken to ensure spills or leaks do not reoccur. Such list shall be updated as appropriate during the term of Order No. R8-2006-0034.

(5) Non-Storm Water Discharges

The discharger shall investigate the facility to identify all non-storm water discharges and their sources. As part of this investigation, all drains (inlets and outlets) shall be evaluated to identify whether they connect to the storm drain system.

All non-storm water discharges shall be described. This shall include the source, quantity, frequency, and characteristics of the non-storm water discharges and associated drainage area.

Non-storm water discharges that contain significant quantities of pollutants or that do not meet the conditions of Order No. R8-2006-0034 are prohibited. (Examples of prohibited non-storm water discharges are contact and non-contact cooling water, boiler blowdown, rinse water, wash water, etc.). The SWPPP must include BMPs to prevent or reduce contact of non-storm water discharges with significant materials or equipment.

(6) Soil Erosion

Describe the facility locations where soil erosion may occur as a result of industrial activity, storm water discharges associated with industrial activity, or authorized non-storm water discharges.

b. The SWPPP shall include a summary of all areas of industrial activities, potential pollutant sources, and potential pollutants. This information should be summarized similar to Table B, below. The last column of Table B, "Control Practices", should be completed in accordance with Section 8., below.

7. *Assessment of Potential Pollutant Sources*

a. The SWPPP shall include a narrative assessment of all industrial activities and potential pollutant sources as described in Section 6., above, to determine:

(1) Which areas of the facility are likely sources of pollutants in storm water discharges and authorized non-storm water discharges, and

(2) Which pollutants are likely to be present in storm water discharges and authorized non-storm water discharges. The discharger shall consider and evaluate various factors when performing this assessment such as current storm water BMPs;

quantities of significant materials handled, produced, stored, or disposed of; likelihood of exposure to storm water or authorized non-storm water discharges; history of spill or leaks; and run-on from outside sources.

b. The discharger shall summarize the areas of the facility that are likely sources of pollutants and the corresponding pollutants that are likely to be present in storm water discharges and authorized non-storm water discharges.

The discharger is required to develop and implement additional BMPs as appropriate and necessary to prevent or reduce pollutants associated with each pollutant source. The BMPs will be narratively described in Section 8., below.

8. *Storm Water Best Management Practices*

The SWPPP shall include a narrative description of the storm water BMPs to be implemented at the facility for each potential pollutant and its source identified in the site assessment phase (Sections 6. and 7., above). The BMPs shall be developed and implemented to reduce or prevent pollutants in storm water discharges and authorized non-storm water discharges. Each pollutant and its source may require one or more BMPs. Some BMPs may be implemented for multiple pollutants and their sources, while other BMPs will be implemented for a very specific pollutant and its source.

The description of the BMPs shall identify the BMPs as (1) existing BMPs, (2) existing BMPs to be revised and implemented, or (3) new BMPs to be implemented. The description shall also include a discussion on the effectiveness of each BMP to reduce or prevent pollutants in storm water discharges and authorized non-storm water discharges. The SWPPP shall provide a summary of all BMPs implemented for each pollutant source. This information should be summarized similar to Table B.

The discharger shall consider the following BMPs for implementation at the facility:

a. Non-Structural BMPs: Non-structural BMPs generally consist of processes, prohibitions, procedures, schedule of activities, etc., that prevent pollutants associated with industrial activity from contacting with storm water discharges and authorized non-storm water discharges. They are considered low technology, cost-effective measures. The discharger should consider all possible non-structural BMPs options before considering additional structural BMPs (see Section 8.b., below). Below is a list of non-structural BMPs that should be considered:

(1) Good Housekeeping: Good housekeeping generally consist of practical procedures to maintain a clean and orderly facility.

(2) Preventive Maintenance: Preventive maintenance includes the regular inspection and maintenance of structural storm water controls (catch basins, oil/water separators, etc.) as well as other facility equipment and systems.

(3) Spill Response: This includes spill clean-up procedures and necessary clean-up equipment based upon the quantities and locations of significant materials that may spill or leak.

(4) Material Handling and Storage: This includes all procedures to minimize the potential for spills and leaks and to minimize exposure of significant materials to storm water and authorized non-storm water discharges.

(5) Employee Training: This includes training of personnel who are responsible for (a) implementing activities identified in the SWPPP, (b) conducting inspections, sampling, and visual observations, and (c) managing storm water. Training should address topics such as spill response, good housekeeping, and material handling procedures, and actions necessary to implement all BMPs identified in the SWPPP. The SWPPP shall identify periodic dates for such training. Records shall be maintained of all training sessions held.

(6) Waste Handling/Recycling: This includes the procedures or processes to handle, store, or dispose of waste materials or recyclable materials.

(7) Record Keeping and Internal Reporting: This includes the procedures to ensure that all records of inspections, spills, maintenance activities, corrective actions, visual observations, etc., are developed, retained, and provided, as necessary, to the appropriate facility personnel.

(8) Erosion Control and Site Stabilization: This includes a description of all sediment and erosion control activities. This may include the planting and maintenance of vegetation, diversion of run-on and runoff, placement of sandbags, silt screens, or other sediment control devices, etc.

(9) Inspections: This includes, in addition to the preventative maintenance inspections identified above, an inspection schedule of all potential pollutant sources. Tracking and follow-up procedures shall be described to ensure adequate corrective actions are taken and SWPPPs are made.

(10) Quality Assurance: This includes the procedures to ensure that all elements of the SWPPP and Monitoring Program are adequately conducted.

b. Structural BMPs: Where non-structural BMPs as identified in Section 8.a., above, are not effective, structural BMPs shall be considered. Structural BMPs generally consist of structural devices that reduce or prevent pollutants in storm water discharges and authorized non-storm water discharges. Below is a list of structural BMPs that should be considered:

(1) Overhead Coverage: This includes structures that provide horizontal coverage of materials, chemicals, and pollutant sources from contact with storm water and authorized non-storm water discharges.

(2) Retention Ponds: This includes basins, ponds, surface impoundments, bermed areas, etc., that do not allow storm water to discharge from the facility.

(3) Control Devices: This includes berms or other devices that channel or route run-on and runoff away from pollutant sources.

(4) Secondary Containment Structures: This generally includes containment structures around storage tanks and other areas for the purpose of collecting any leaks or spills.

(5) Treatment: This includes inlet controls, infiltration devices, oil/water separators, detention ponds, vegetative swales, etc., that reduce the pollutants in storm water discharges and authorized non-storm water discharges.

9. *Annual Comprehensive Site Compliance Evaluation*

The discharger shall conduct one comprehensive site compliance evaluation in each reporting period (July 1-June 30). Evaluations shall be conducted within 8-16 months of each other. The SWPPP shall be revised, as appropriate, and the revisions implemented within 90 days of the evaluation. Evaluations shall include the following:

a. A review of all visual observation records, inspection records, and sampling and analysis results.

b. A visual inspection of all potential pollutant sources for evidence of, or the potential for, pollutants entering the drainage system.

c. A review and evaluation of all BMPs (both structural and non-structural) to determine whether the BMPs are adequate, properly implemented and maintained, or whether additional BMPs are needed. A visual inspection of equipment needed to implement the SWPPP, such as spill response equipment, shall be included.

d. An evaluation report that includes, (1) identification of personnel performing the evaluation, (2) the date(s) of the evaluation, (3) necessary SWPPP revisions, (4) schedule, as required in Section 10.e, below, for implementing SWPPP revisions, (5) any incidents of non-compliance and the corrective actions taken, and (6) a certification that the discharger is in compliance with Order No. R8-2006-0034. If the above certification cannot be provided, explain in the evaluation report why the discharger is not in compliance with this order. The evaluation report shall be submitted as part of the annual report, retained for at least five years, and signed and certified.

10. *SWPPP General Requirements*

a. The SWPPP shall be retained on site and made available upon request by a representative of the Regional Water Board and/or local storm water management agency (local agency) which receives the storm water discharges.

b. The Regional Water Board and/or local agency may notify the discharger when the SWPPP does not meet one or more of the minimum requirements of this section. As requested by the Regional Water Board and/or local agency, the discharger shall submit a SWPPP revision and implementation schedule that meets the minimum requirements of this section to the Regional Water Board and/or local agency that requested the SWPPP revisions. Within 14 days after implementing the required

SWPPP revisions, the discharger shall provide written certification to the Regional Water Board and/or local agency that the revisions have been implemented.

c. The SWPPP shall be revised, as appropriate, and implemented prior to changes in industrial activities which (1) may significantly increase the quantities of pollutants in storm water discharge, (2) cause a new area of industrial activity at the facility to be exposed to storm water, or (3) begin an industrial activity which would introduce a new pollutant source at the facility.

d. The SWPPP shall be revised and implemented in a timely manner, but in no case more than 90 days after a discharger determines that the SWPPP is in violation of any requirement(s) of Order No. R8-2006-0034.

e. When any part of the SWPPP is infeasible to implement by the deadlines specified in Order No. R8-2006-0034, due to proposed significant structural changes, the discharger shall submit a report to the Regional Water Board prior to the applicable deadline that (1) describes the portion of the SWPPP that is infeasible to implement by the deadline, (2) provides justification for a time extension, (3) provides a schedule for completing and implementing that portion of the SWPPP, and (4) describes the BMPs that will be implemented in the interim period to reduce or prevent pollutants in storm water discharges and authorized non-storm water discharges. Such reports are subject to Regional Water Board approval and/or modifications. The discharger shall provide written notification to the Regional Water Board within 14 days after the SWPPP revisions are implemented.

f. The SWPPP shall be provided, upon request, to the Regional Water Board. The SWPPP is considered a report that shall be available to the public by the Regional Water Board under Section 308(b) of the Clean Water Act.

TABLE A

FIVE PHASES FOR DEVELOPING AND IMPLEMENTING INDUSTRIAL STORM WATER POLLUTION PREVENTION PLANS

PLANNING AND ORGANIZATION
*Form pollution prevention team
*Review other plans

↓

ASSESSMENT PHASE
*Develop a site map
*Identify potential pollutant sources
*Inventory of materials and chemicals
*List significant spills and leaks
*Identify non-storm water discharges
*Assess pollutant risks

↓

BEST MANAGEMENT PRACTICES IDENTIFICATION PHASE
*Non-structural BMPs
*Structural BMPs
*Select activity and site-specific BMPs

↓

IMPLEMENTATION PHASE
*Train employees
*Implement BMPs
*Conduct record keeping and reporting

↓

EVALUATION / MONITORING
*Conduct annual site evaluation
*Review monitoring information
*Evaluate BMPs
*Review and revise SWPPP

TABLE B

EXAMPLE

ASSESSMENT OF POTENTIAL POLLUTION SOURCES AND CORRESPONDING BEST MANAGEMENT PRACTICES SUMMARY

AREA	ACTIVITY	POLLUTANT SOURCE	POLLUTANT	**BEST MANAGEMENT PRACTICES**
Vehicle & equipment fueling	Fueling	Spills and leaks during delivery	Fuel oil	- Use spill and overflow protection - Minimize run-on of storm water into the fueling area - Cover fueling area - Use dry cleanup methods rather than hosing down area - Implement proper spill prevention control program - Implement adequate preventative maintenance program to prevent tank and line leaks - Inspect fueling areas regularly to detect problems before they occur - Train employees on proper fueling, cleanup, and spill response techniques.
		Spills caused by topping off fuel oil	Fuel oil	
		Hosing or washing down fuel area	Fuel oil	
		Leaking storage tanks	Fuel oil	
		Rainfall running off fueling areas, and rainfall running onto and off fueling area	Fuel oil	

ATTACHMENT K - STORMWATER MONITORING PROGRAM AND REPORTING REQUIREMENTS

1. *Implementation Schedule*

The discharger shall continue to implement their existing Stormwater monitoring program and implement any necessary revisions to their Stormwater monitoring program in a timely manner, but in no case later than 90 days before start up of operation. The discharger may use the monitoring results conducted in accordance with their existing Stormwater monitoring program to satisfy the pollutant/parameter reduction requirements in Section 5.c., below, and Sampling and Analysis Exemptions and Reduction Certifications in Section 10, below.

2. *Objectives*

The objectives of the monitoring program are to:

a. Ensure that storm water discharges are in compliance with waste discharge requirements specified in Order No. R8-2006-0034.

b. Ensure practices at the facility to reduce or prevent pollutants in storm water discharges and authorized non-storm water discharges are evaluated and revised to meet changing conditions.

c. Aid in the implementation and revision of the SWPPP required by Attachment "J" Stormwater Pollution Prevention Plan of Order No. R8-2006-0034.

d. Measure the effectiveness of best management practices (BMPs) to prevent or reduce pollutants in storm water discharges and authorized non-storm water discharges. Much of the information necessary to develop the monitoring program, such as discharge locations, drainage areas, pollutant sources, etc., should be found in the Storm Water Pollution Prevention Plan (SWPPP). The facility's monitoring program shall be a written, site-specific document that shall be revised whenever appropriate and be readily available for review by employees or Regional Water Board inspectors.

3. *Non-Storm Water Discharge Visual Observations*

a. The discharger shall visually observe all drainage areas within their facility for the presence of unauthorized non-storm water discharges;

b. The discharger shall visually observe the facility's authorized non-storm water discharges and their sources;

c. The visual observations required above shall occur quarterly, during daylight hours, on days with no storm water discharges, and during scheduled facility operating hours[1]. Quarterly visual observations shall be conducted in each of the following periods: January-March, April-June, July-September, and October-December. The discharger shall conduct quarterly visual observations within 6-18 weeks of each other.

d. Visual observations shall document the presence of any discolorations, stains, odors, floating materials, etc., as well as the source of any discharge. Records shall be maintained of the visual observation dates, locations observed, observations, and response taken to eliminate unauthorized non-storm water discharges and to reduce or prevent pollutants from contacting non-storm water discharges. The SWPPP shall be revised, as necessary, and implemented in accordance with Attachment "J" Stormwater Pollution Prevention Plan of Order No. R8-2006-0034.

4. *Storm Water Discharge Visual Observations*

a. With the exception of those facilities described in Section 4.d., below, the discharger shall visually observe storm water discharges from one storm event per month during the wet season (October 1-May 30). These visual observations shall occur during the first hour of discharge and at all discharge locations. Visual observations of stored or contained storm water shall occur at the time of release.

b. Visual observations are only required of storm water discharges that occur during daylight hours that are preceded by at least three (3) working days[2] without storm water discharges and that occur during scheduled facility operating hours.

c. Visual observations shall document the presence of any floating and suspended material, oil and grease, discolorations, turbidity, odor, and source of any pollutants. Records shall be maintained of observation dates, locations observed, observations, and response taken to reduce or prevent pollutants in storm water discharges. The SWPPP shall be revised, as necessary, and implemented in accordance with Attachment "J" Stormwater Pollution Prevention Plan of Order No. R8-2006-0034.

d. The discharger with storm water containment facilities shall conduct monthly inspections of their containment areas to detect leaks and ensure maintenance of adequate freeboard. Records shall be maintained of the inspection dates, observations, and any response taken to eliminate leaks and to maintain adequate freeboard.

---

1 "Scheduled facility operating hours" are the time periods when the facility is staffed to conduct any function related to industrial activity, but excluding time periods where only routine maintenance, emergency response, security, and/or janitorial services are performed.

2 Three (3) working days may be separated by non-working days such as weekends and holidays provided that no storm water discharges occur during the three (3) working days and the non-working days.

5. *Sampling and Analysis*

a. The discharger shall collect storm water samples during the first hour of discharge from (1) the first storm event of the wet season, and (2) at least one other storm event in the wet season. All storm water discharge locations shall be sampled. Sampling of stored or contained storm water shall occur at the time the stored or contained storm water is released. The discharger that does not collect samples from the first storm event of the wet season are still required to collect samples from two other storm events of the wet season and shall explain in the "Annual Stormwater Report" (see Section 12, below) why the first storm event was not sampled.

b. Sample collection is only required of storm water discharges that occur during scheduled facility operating hours and that are preceded by at least (3) three working days without storm water discharge.

c. The samples shall be analyzed for:

(1) Total suspended solids (TSS) pH, specific conductance, and total organic carbon (TOC). Oil and grease (O&G) may be substituted for TOC;

(2) Toxic chemicals and other pollutants that are likely to be present in storm water discharges in significant quantities. If these pollutants are not detected in significant quantities after two consecutive sampling events, the discharger may eliminate the pollutant from future sample analysis until the pollutant is likely to be present again;

(3) The discharger is not required to analyze a parameter when either of the two following conditions are met: (a) the parameter has not been detected in significant quantities from the last two consecutive sampling events, or (b) the parameter is not likely to be present in storm water discharges and authorized non-storm water discharges in significant quantities based upon the discharger's evaluation of the facilities industrial activities, potential pollutant sources, and SWPPP; and

(4) Other parameters as required by the Regional Water Board.

6. *Sample Storm Water Discharge Locations*

a. The discharger shall visually observe and collect samples of storm water discharges from all drainage areas that represent the quality and quantity of the facility's storm water discharges from the storm event.

b. If the facility's storm water discharges are commingled with run-on from surrounding areas, the discharger should identify other visual observation and sample collection locations that have not been commingled by run-on and that

represent the quality and quantity of the facility's storm water discharges from the storm event.

c. If visual observation and sample collection locations are difficult to observe or sample (e.g., sheet flow, submerged outfalls), the discharger shall identify and collect samples from other locations that represent the quality and quantity of the facility's storm water discharges from the storm event.

d. The discharger that determines that the industrial activities and BMPs within two or more drainage areas are substantially identical may either (1) collect samples from a reduced number of substantially identical drainage areas, or (2) collect samples from each substantially identical drainage area and analyze a combined sample from each substantially identical drainage area. The discharger must document such a determination in the annual Stormwater report.

7. Visual Observation and Sample Collection Exceptions

The discharger is required to be prepared to collect samples and conduct visual observations at the beginning of the wet season (October 1) and throughout the wet season until the minimum requirements of Sections 4. and 5., above, are completed with the following exceptions:

a. The discharger is not required to collect a sample and conduct visual observations in accordance with Section 4 and Section 5, above, due to dangerous weather conditions, such as flooding, electrical storm, etc., when storm water discharges begin after scheduled facility operating hours or when storm water discharges are not preceded by three working days without discharge. Visual observations are only required during daylight hours. The discharger that does not collect the required samples or visual observations during a wet season due to these exceptions shall include an explanation in the "Annual Stormwater Report" why the sampling or visual observations could not be conducted.

b. The discharger may conduct visual observations and sample collection more than one hour after discharge begins if the discharger determines that the objectives of this section will be better satisfied. The discharger shall include an explanation in the "Annual Stormwater Report" why the visual observations and sample collection should be conducted after the first hour of discharge.

8. *Alternative Monitoring Procedures*

The discharger may propose an alternative monitoring program that meets Section 2, above, monitoring program objectives for approval by the Regional Water Board's Executive Officer. The discharger shall continue to comply with the monitoring requirements of this section and may not implement an alternative monitoring plan until the alternative monitoring plan is approved by the Regional Water Board's Executive Officer. Alternative monitoring plans are subject to modification by the Regional Water Board's Executive Officer.

9. *Monitoring Methods*

a. The discharger shall explain how the facility's monitoring program will satisfy the monitoring program objectives of Section 2., above. This shall include:

(1) Rationale and description of the visual observation methods, location, and frequency;

(2) Rationale and description of the sampling methods, location, and frequency; and

(3) Identification of the analytical methods and corresponding method detection limits used to detect pollutants in storm water discharges. This shall include justification that the method detection limits are adequate to satisfy the objectives of the monitoring program.

b. All sampling and sample preservation shall be in accordance with the current edition of "Standard Methods for the Examination of Water and Wastewater" (American Public Health Association). All monitoring instruments and equipment (including the discharger's own field instruments for measuring pH and Electro-conductivity) shall be calibrated and maintained in accordance with manufacturers' specifications to ensure accurate measurements. All laboratory analyses must be conducted according to test procedures under 40 CFR Part 136, unless other test procedures have been specified in Order No. R8-2006-0034 or by the Regional Water Board's Executive Officer. All metals shall be reported as total recoverable metals or unless otherwise specified in Order No. R8-2006-0034. With the exception of analysis conducted by the discharger, all laboratory analyses shall be conducted at a laboratory certified for such analyses by the State Department of Health Services. The discharger may conduct their own sample analyses if the discharger has sufficient capability (qualified employees, laboratory equipment, etc.) to adequately perform the test procedures.

10. *Sampling and Analysis Exemptions and Reductions*

A discharger who qualifies for sampling and analysis exemptions, as described below in Section 10.a.(1) or who qualifies for reduced sampling and analysis, as described below in Section 10.b., must submit the appropriate certifications and required documentation to the Regional Water Board prior to the wet season (October 1) and certify as part of the annual Stormwater report submittal. A discharger that qualifies for either the Regional Water Board or local agency certification programs, as described below in Section 10.a.(2) and (3), shall submit certification and documentation in accordance with the requirements of those programs. The discharger who provides certification(s) in accordance with this section are still required to comply with all other monitoring program and reporting requirements. The discharger shall prepare and submit their certification(s) using forms and instructions provided by the State Water Board, Regional Water Board, or local agency or shall submit their information on a form that contains equivalent information. The discharger whose facility no longer meets the certification conditions must notify the Regional Water Board's Executive Officer (and local agency) within 30 days and

immediately comply with Section 5., Sampling and Analysis requirements. Should a Regional Water Board (or local agency) determine that a certification does not meet the conditions set forth below, the discharger must immediately comply with the Section 5., Sampling and Analysis requirements.

a. Sampling and Analysis Exemptions

A discharger is not required to collect and analyze samples in accordance with Section 5., above, if the discharger meets all of the conditions of one of the following certification programs:

(1) No Exposure Certification (NEC)

This exemption is designed primarily for those facilities where all industrial activities are conducted inside buildings and where all materials stored and handled are not exposed to storm water. To qualify for this exemption, the discharger must certify that their facilities meet all of the following conditions:

(a) All prohibited non-storm water discharges have been eliminated or otherwise permitted.

(b) All authorized non-storm water discharges have been identified and addressed in the SWPPP.

(c) All areas of past exposure have been inspected and cleaned, as appropriate.

(d) All significant materials related to industrial activity (including waste materials) are not exposed to storm water or authorized non-storm water discharges.

(e) All industrial activities and industrial equipment are not exposed to storm water or authorized non-storm water discharges.

(f) There is no exposure of storm water to significant materials associated with industrial activity through other direct or indirect pathways such as from industrial activities that generate dust and particulates.

(g) There is periodic re-evaluation of the facility to ensure conditions (a), (b), (d), (e), and (f) above are continuously met. At a minimum, re-evaluation shall be conducted once a year.

(2) Regional Water Board Certification Programs

The Regional Water Board may grant an exemption to the Section 5. Sampling and Analysis requirements if it determines a discharger has met the conditions set forth in a Regional Water Board certification program. Regional Water Board certification programs may include conditions to (a) exempt the discharger whose facilities infrequently discharge storm water to waters of the United States, and (b) exempt the discharger that demonstrate compliance with the terms and conditions of Order No. R8-2006-0034.

(3) Local Agency Certifications

A local agency may develop a local agency certification program. Such programs must be approved by the Regional Water Board. An approved local agency program may either grant an exemption from Section 5. Sampling and Analysis requirements or reduce the frequency of sampling if it determines that a discharger has demonstrated compliance with the terms and conditions of the Industrial Activities Storm Water General Permit Order No. 97-03-DWQ which was adopted by the State Water Resources Control Board on April 17, 1997.

b. Sampling and Analysis Reduction

(1) A discharger may reduce the number of sampling events required to be sampled for the remaining term of Order No. R8-2006-0034 if the discharger provides certification that the following conditions have been met:

(a) The discharger has collected and analyzed samples from a minimum of six storm events from all required drainage areas;

(b) All prohibited non-storm water discharges have been eliminated or otherwise permitted;

(c) The discharger demonstrates compliance with the terms and conditions of the Order No. R8-2006-0034 for the previous two years (i.e., completed Annual Stormwater Reports, performed visual observations, implemented appropriate BMPs, etc.);

(d) The discharger demonstrates that the facility's storm water discharges and authorized non-storm water discharges do not contain significant quantities of pollutants; and

(e) Conditions (b), (c), and (d) above are expected to remain in effect for a minimum of one year after filing the certification.

11. Records

Records of all storm water monitoring information and copies of all reports (including the Annual Stormwater Reports) required by Order No. R8-2006-0034 shall be retained for a period of at least five years. These records shall include:

a. The date, place, and time of site inspections, sampling, visual observations, and/or measurements;

b. The individual(s) who performed the site inspections, sampling, visual observations, and or measurements;

c. Flow measurements or estimates;

d. The date and approximate time of analyses;

e. The individual(s) who performed the analyses;

f. Analytical results, method detection limits, and the analytical techniques or methods used;

g. Quality assurance/quality control records and results;

h. Non-storm water discharge inspections and visual observations and storm water discharge visual observation records (see Sections 3. and 4., above);

i. Visual observation and sample collection exception records (see Section 5.a, 6.d, 7, and 10.b.(2), above;

j. All calibration and maintenance records of on-site instruments used;

k. All Sampling and Analysis Exemption and Reduction certifications and supporting documentation (see Section 10);

l. The records of any corrective actions and follow-up activities that resulted from the visual observations.

12. Annual Report

The discharger shall submit an Annual Stormwater Report by July 1 of each year to the Executive Officer of the Regional Water Board and to the local agency (if requested). The report shall include a summary of visual observations and sampling results, an evaluation of the visual observation and sampling and analysis results, laboratory reports, the Annual Comprehensive Site Compliance Evaluation Report required in Section 9. of Attachment "J" of Order No. R8-2006-0034, an explanation of why a facility did not implement any activities required by Order No. R8-2006-0034 (if not already included in the Evaluation Report), and records specified in Section 11., above. The method detection limit of each analytical parameter shall be included. Analytical results that are less than the method detection limit shall be reported as "less than the method detection limit". The discharger shall prepare and submit their Annual Stormwater Reports using the annual report forms provided by the State Water Board or Regional Water Board or shall submit their information on a form that contains equivalent information.

13. Watershed Monitoring Option

Regional Water Boards may approve proposals to substitute watershed monitoring for some or all of the requirements of this section if the Regional Water Board finds that the watershed monitoring will provide substantially similar monitoring information in evaluating discharger compliance with the requirements of Order No. R8-2006-0034.