California Regional Water Quality Control Board
Santa Ana Region

Linda S. Adams
Secretary for
Environmental Protection

3737 Main Street, Suite 500, Riverside, California 92501-3348
Phone (951) 782-4130 • Fax (951) 781-6288 • TDD (951) 782-3221
http://www.waterboards.ca.gov/santaana

Arnold Schwarzenegger
Governor

April 30, 2007

Jonathan Daly, General Manager
City of Corona, Department of Water & Power
400 South Vicentia Avenue
Corona, CA 92882-2187

REISSUANCE OF WASTE DISCHARGE AND PRODUCER/USER WATER RECYCLING REQUIREMENTS FOR THE CITY OF CORONA MUNICIPAL WASTEWATER TREATMENT PLANT NO. 3, ORDER NO. R8-2007-0007, NPDES NO. CA8000395, RIVERSIDE COUNTY

At the regular Board Meeting held on April 20, 2007, the Board adopted Order No. R8-2007-0007. A certified copy is enclosed for your records.

If you have any questions, please contact Jun Martirez at 951-782-3258 from our Permitting section.

Sincerely,

Felipa Carrillo
Executive Assistant

Enclosure: Order No. R8-2007-0007

cc: State Water Resources Control Board, DWQ, Phil S. Isorena
USEPA, Region 9, Permits Issuance Section (WTR-5) - Doug Eberhardt
Tetra Tech, Lee Solomon (via email)

/fc

California Regional Water Quality Control Board
Santa Ana Region

April 20, 2007

ITEM: *7

SUBJECT: Reissuance of Waste Discharge and Producer/User Water Recycling Requirements for the City of Corona Municipal Wastewater Treatment Plant No. 3, Order No. R8-2007-0007, NPDES No. CA8000395, Riverside County

DISCUSSION:

See attached Fact Sheet

RECOMMENDATIONS:

Adopt Order No. R8-2007-0007, NPDES No. CA8000395 as presented.

COMMENT SOLICITATION:

Comments were solicited from the discharger and the following agencies:

U.S. Environmental Protection Agency, Permits Issuance Section (WTR-5) – Doug Eberhardt
U.S. Army District, Los Angeles, Corps of Engineers, Regulatory Branch
U.S. Fish and Wildlife Service – Carlsbad
State Water Resources Control Board, Office of the Chief Counsel – Erik Spiess
California State Department of Health Services, San Diego – Steven Williams
California State Department of Health Services, Carpinteria – Jeff Stone
California Coastal Conservancy – Mary Small
California Coastal Commission – Steve Rynas
State Department of Water Resources - Glendale
State Department of Fish and Game, Ontario
Orange County Water District – Nira Yamachika/Greg Woodside
Riverside County Flood Control and Water Conservation District – Jason Uhley
Riverside County Environmental Health Services
Santa Ana Watershed Project Authority – Celeste Cantu
Santa Ana Dischargers Association –
Inland Empire Waterkeeper - Mandy Revell
Orange County Coastkeeper – Garry Brown
Lawyers for Clean Water C/c San Francisco Baykeeper

California Regional Water Quality Control Board

Santa Ana Region

3737 Main Street, Suite 500, Riverside, California 92501-3348
Phone (951) 782-4130 • FAX (951) 781-6288 • TDD (951) 782-3221
www.waterboards.ca.gov/santaana

ORDER NO. R8-2007-0007
NPDES NO. CA8000395

WASTE DISCHARGE AND PRODUCER/USER WATER RECYCLING REQUIREMENTS FOR CITY OF CORONA, MUNICIPAL WASTEWATER TREATMENT PLANT NO. 3 DISCHARGE TO TEMESCAL CREEK REACH 1

The following Discharger is subject to waste discharge requirements set forth in this Order:

Table 1. Discharger Information

Discharger	**City of Corona, Department of Water & Power**
Name of Facility	**Municipal Wastewater Treatment Plant No. 3**
Facility Address	**3997 Temescal Canyon Road**
	Corona, CA 92883
	Riverside County
The U.S. Environmental Protection Agency (USEPA) and the Regional Water Quality Control Board have classified this discharge as a **major** discharge.	

The discharge by the City of Corona from the discharge points identified below is subject to waste discharge requirements as set forth in this Order:

Table 2. Discharge Locations

Discharge Point	Effluent Description	Discharge Point Latitude	Discharge Point Longitude	Disposal Site
001	Chlorinated tertiary treated effluent	33° 49' 24" N	117° 30' 22" W	Temescal Creek
002	Chlorinated tertiary treated effluent	33° 49' 20" N	117° 30' 25" W	Various recycled water use sites

Table 3. Administrative Information

This Order was adopted by the Regional Water Quality Control Board on:	**April 20, 2007**
This Order shall become effective on:	**April 20, 2007**
This Order shall expire on:	**April 1, 2012**
The Discharger shall file a Report of Waste Discharge in accordance with title 23, California Code of Regulations, as application for issuance of new waste discharge requirements no later than:	**October 4, 2011**

IT IS HEREBY ORDERED, that this Order supercedes Order No. No. 01-79 except for enforcement purposes, and, in order to meet the provisions contained in division 7 of the Water Code (CWC) (commencing with section 13000) and regulations adopted thereunder, and the provisions of the federal Clean Water Act (CWA) and regulations and guidelines adopted thereunder, the Discharger shall comply with the requirements in this Order.

I, Gerard J. Thibeault, Executive Officer, do hereby certify that this Order with all attachments is a full, true, and correct copy of an Order adopted by the California Regional Water Quality Control Board, Santa Ana Region, on April 20, 2007.

Gerard J. Thibeault, Executive Officer

CALIFORNIA REGIONAL WATER QUALITY CONTROL BOARD
REGION 8, SANTA ANA REGION

ORDER NO. R8-2007-0007, NPDES NO. CA8000395

TABLE OF CONTENTS

I. Facility Information 2
II. Findings 2
III. Discharge Prohibitions 9
IV. Effluent Limitations and Discharge Specifications 9
  A. Effluent Limitations – Discharge Point (DP) 001 9
    1. Final Effluent Limitations - DP 001 9
    2. Interim Effluent Limitations - DPs 001 12
    3. Toxicity Requirements - DP 001 13
  B. Reclamation Specifications – DP 002 13
V. Receiving Water Limitations 17
  A. Surface Water Limitations 17
  B. Groundwater Limitations 18
VI. Provisions 18
  A. Standard Provisions 18
  B. Monitoring and Reporting Program Requirements 20
  C. Special Provisions 20
    1. Reopener Provisions 20
    2. Special Studies, Technical Reports and Additional Monitoring Requirements – Not Applicable 21
    3. Best Management Practices and Pollution Prevention 23
    4. Construction, Operation and Maintenance Specifications 23
    5. Special Provisions for Municipal Facilities (POTWs Only) 24
    6. Other Special Provisions – Not Applicable 25
    7. Compliance Schedules – DP 001 25
VII. Compliance Determination 26

Attachment A – Definitions A-1
Attachment B – Vicinity Map B-1
Attachment C – Flow Schematic C-1
Attachment D – Standard Provisions D-1
Attachment E – ProvisionsMonitoring and Reporting Program (MRP) E-1
Attachment F – Fact Sheet F-1
Attachment G – EPA Priority Pollutants List G-1
Attachment I – Minimum Levels I-1

I. FACILITY INFORMATION

The following Discharger is subject to waste discharge requirements as set forth in this Order:

Table 4. Facility Information

Discharger	**City of Corona, Department of Water & Power**
Name of Facility	**Municipal Wastewater Treatment Plant No. 3**
Facility Address	**3997 Temescal Canyon Road**
	Corona, CA 92883
	Riverside County
Facility Contact, Title, and Phone	**Rudy Fandel, Regulatory Compliance Manager (951) 736-2476**
Mailing Address	**400 South Vicentia Avenue, Corona, CA 92882**
Type of Facility	**POTW**
Facility Design Flow	**1.0 million gallons per day (mgd)**

II. FINDINGS

The California Regional Water Quality Control Board, Santa Ana Region (hereinafter Regional Water Board), finds:

A. Background. The City of Corona (hereinafter Discharger) is currently discharging pursuant to Order No. 01-79 and National Pollutant Discharge Elimination System (NPDES) Permit No. CA8000395. The Discharger submitted a Report of Waste Discharge on March 7, 2006 and applied for a NPDES permit renewal for the intermittent discharge of tertiary treated wastewater (up to 1 million gallons per day (mgd)) to Temescal Creek, Reach 1, a tributary to Reach 3 of the Santa Ana River.

For the purposes of this Order, references to the "discharger" or "permittee" in applicable federal and State laws, regulations, plans, or policy are held to be equivalent to references to the Discharger herein.

B. Facility Description. The Discharger operates the facility, a publicly owned treatment works. The facility receives domestic wastewater from a service area that encompasses approximately 4,650 acres of primarily residential areas west and east of the I-15 Freeway including Cunningham Baristic Project and Westerly Plateau area, Eagle Glen area, Butterfield Station area, Bedford Wash area and El Cerrito area. The Facility consists of headwork structures, rotating drum screen, activated sludge aeration basins with nitrification and denitrification zones, microfiltration membrane system, chlorination, and dechlorination. Biosolids are pumped to City of Corona's Treatment Plant No. 2.

All tertiary treated effluent from the plant is recycled for landscape irrigation. The recycled water is pumped to the Eagle Glen Golf Course and three sports fields. However, during periods of high rainfall and/or low demand for recycled-water, the chlorinated tertiary treated wastewater is dechlorinated with sodium bisulfite and discharged into Temescal Creek, Reach 1. The treatment plant could be expanded to accommodate a total of 3 mgd design capacity. Attachment B provides a map of the area around the facility. Attachment C provides a flow schematic of the facility.

C. **Legal Authorities.** This Order is issued pursuant to section 402 of the federal Clean Water Act (CWA) and implementing regulations adopted by the U.S. Environmental Protection Agency (USEPA) and chapter 5.5, division 7 of the California Water Code (commencing with section 13370). It shall serve as a NPDES permit for point source discharges from this facility to surface waters. This Order also serves as Waste Discharge Requirements (WDRs) pursuant to article 4, chapter 4, division 7 of the Water Code (commencing with section 13260).

D. **Background and Rationale for Requirements.** The Regional Water Board developed the requirements in this Order based on information submitted as part of the application, and through monitoring and reporting programs and other available information. The Fact sheet (Attachment F), which contains background information and rationale for Order requirements, is hereby incorporated into this Order and constitutes part of the Findings for this Order. Attachments A through E and G through I are also incorporated into this Order.

E. **California Environmental Quality Act (CEQA).** Under Water Code section 13389, this action to adopt an NPDES permit is exempt from the provisions of CEQA, Public Resources Code sections 21000 et seq. (*County of Los Angeles v. California State Water Resources Control Board* (2006) 143 Cal.App.4th 985, mod. (Nov. 6, 2006, B184034) 50 Cal.Rptr.3d 619, 632-636.). This action also involves the re-issuance of waste discharge requirements for an existing facility that discharges treated wastewater to land and as such, is exempt from the provisions of California Environmental Quality Act (commencing with Section 21100) in that the activity is exempt pursuant to Title 14 of the California Code of Regulations Section 15301.

F. **Technology-based Effluent Limitations.** Section 301(b) of the CWA and implementing USEPA permit regulations at section 122.44, title 40 of the Code of Federal Regulations[1], require that permits include conditions meeting applicable technology-based requirements at a minimum, and any more stringent effluent limitations necessary to meet applicable water quality standards. The discharge authorized by this Order must meet minimum federal technology-based requirements based on tertiary treatment or equivalent requirements that meet both the technology-based secondary treatment standards for POTWs and/or Best Professional Judgment (BPJ) in accordance with Part 125, section 125.3. A detailed discussion of the technology-based effluent limitations development is included in the Fact Sheet.

---

1 All further statutory references are to title 40 of the Code of Federal Regulations unless otherwise indicated.

G. **Water Quality-based Effluent Limitations.** Section 301(b) of the CWA and section 122.44(d) require that permits include limitations more stringent than applicable federal technology-based requirements where necessary to achieve applicable water quality standards. This Order contains requirements, expressed as a technology equivalence requirement, more stringent than secondary treatment requirements that are necessary to meet applicable water quality standards. The rationale for these requirements, which consist of tertiary treatment requirements, is discussed in the Fact Sheet.

Section 122.44(d)(1)(i) mandates that permits include effluent limitations for all pollutants that are or may be discharged at levels that have the reasonable potential to cause or contribute to an exceedance of a water quality standard, including numeric and narrative objectives within a standard. Where reasonable potential has been established for a pollutant, but there is no numeric criterion or objective for the pollutant, water quality-based effluent limitations (WQBELs) must be established using: (1) USEPA criteria guidance under CWA section 304(a), supplemented where necessary by other relevant information; (2) an indicator parameter for the pollutant of concern; or (3) a calculated numeric water quality criterion, such as a proposed state criterion or policy interpreting the state's narrative criterion, supplemented with other relevant information, as provided in section 122.44(d)(1)(vi).

H. **Water Quality Control Plans.** The Regional Water Board adopted a revised Water Quality Control Plan for the Santa Ana Region (hereinafter Basin Plan) that became effective on January 24, 1995. The Basin Plan designates beneficial uses, establishes water quality objectives, and contains implementation programs and policies to achieve those objectives for all waters in the Santa Ana Region addressed through the plan. More recently, the Basin Plan was amended significantly to incorporate revised boundaries for groundwater subbasins, now termed "management zones", new nitrate-nitrogen and TDS objectives for the new management zones, and new nitrogen and TDS management strategies applicable to both surface and ground waters. This Basin Plan Amendment was adopted by the Regional Board on January 22, 2004. The State Water Resources Control Board and Office of Administrative Law (OAL) approved the Amendment on September 30, 2004 and December 23, 2004, respectively. The surface water standards provisions of the Amendment are awaiting approval by the U.S. Environmental Protection Agency. This Order implements relevant provisions of the N/TDS Basin Plan Amendment.

In addition, the Basin Plan implements State Water Resources Control Board (State Water Board) Resolution No. 88-63, which established State policy that all waters, with certain exceptions, should be considered suitable or potentially suitable for municipal or domestic supply. Based on the criteria specified in the State Water Board Resolution, the Basin Plan specifies that Reach 5 of the Santa Ana River, beginning at the intersection of Orange Avenue in the City of Redlands, and downstream reaches, including Temescal Creek, Reach 1, are excepted from the municipal and domestic supply beneficial use. As discussed in detail in the Fact Sheet (Attachment F), beneficial uses applicable to Temescal groundwater management zone, Reach 1 of Temescal Creek, and Reach 3 of the Santa Ana River are as follows:

Table 5. Basin Plan Beneficial Uses

Discharge Point	Receiving Water Name	Beneficial Use(s)
001	Temescal Creek, Reach 1 (intermittent discharge)	Agricultural supply, groundwater recharge, water contact recreation, non-contact water recreation, warm freshwater habitat, wildlife habitat, and rare, threatened, and endangered species. Excepted from Municipal and Domestic supply
001	Santa Ana River, Reach 3	Groundwater recharge, water contact recreation, non-contact water recreation, warm freshwater habitat, wildlife habitat, industrial service supply, and industrial process supply Excepted from Municipal and Domestic supply
002	Temescal Groundwater Management Zone	Municipal and domestic supply, industrial service supply, agricultural supply, and industrial process supply.

Requirements of this Order implement the Basin Plan.

I. **Total Dissolved Solids Offset:** The amended Basin Plan includes a wasteload allocation for discharges of total dissolved solids (TDS) to the Santa Ana River system. The Basin Plan recognizes that strict compliance with TDS limits may be difficult to achieve and it describes the regulatory approach the Regional Board uses to address such situations. The Board incorporates offset provisions in waste discharge requirements whereby dischargers can implement an approved program to offset TDS discharges in excess of specified TDS limits, provided that the Discharger makes all reasonable efforts to improve the TDS quality of the water supply (and thereby, the wastewater). As in the previous waste discharge requirements, the Discharger has constructed and operated a 15 million gallon a day water desalter facility to offset the total dissolved solids discharges from Plant No. 3. This Order requires the Discharger to submit for review and approval an updated offset program. See Section VI.C.2.c., below.

J. **National Toxics Rule (NTR) and California Toxics Rule (CTR).** USEPA adopted the NTR on December 22, 1992, and later amended it on May 4, 1995 and November 9, 1999. About forty criteria in the NTR applied in California. On May 18, 2000, USEPA adopted the CTR. The CTR promulgated new toxics criteria for California and, in addition, incorporated the previously adopted NTR criteria that were applicable in the state. The CTR was amended on February 13, 2001. These rules contain water quality criteria for priority pollutants.

K. **State Implementation Policy.** On March 2, 2000, the State Water Board adopted the Policy for Implementation of Toxics Standards for Inland Surface Waters, Enclosed Bays, and Estuaries of California (State Implementation Policy or SIP). The SIP became effective on April 28, 2000 with respect to the priority pollutant criteria promulgated for California by the USEPA through the NTR and to the priority pollutant objectives established by the Regional Water Board in the Basin Plan. The SIP became effective on May 18, 2000 with respect to the priority pollutant criteria promulgated by the USEPA through the CTR. The State Water Board adopted amendments to the SIP on February 24, 2005 that became effective on July 13, 2005. The SIP establishes implementation provisions for priority pollutant criteria and objectives and provisions for chronic toxicity control. Requirements of this Order implement the SIP.

L. **State General Waste Discharge Requirements for Sanitary Sewer Systems.** The State Water Board issued General Waste Discharge Requirements for Sanitary Sewer Systems, Water Quality Order No. 2006-0003 on May 2, 2006, requiring public agencies that own sanitary sewer systems comprised of more than one mile of pipes or sewer lines to enroll for coverage under the General Order. The General Order requires agencies to develop sanitary sewer management plans (SSMPs) and report all sanitary sewer overflows (SSOs).

This Order requires the Discharger and other governmental agencies[2] to obtain enrollment for regulation under the General Water Quality Order No. 2006-0003.

M. **Compliance Schedules and Interim Requirements -** Section 2.1 of the SIP provides that, based on a Discharger's request and demonstration that it is infeasible for an existing Discharger to achieve immediate compliance with an effluent limitation derived from a CTR criterion, compliance schedules may be allowed in an NPDES permit. Unless an exception has been granted under Section 5.3 of the SIP, a compliance schedule may not exceed 5 years from the date that the permit is issued or reissued, nor may it extend beyond 10 years from the effective date of the SIP (or May 18, 2010) to establish and comply with CTR criterion-based effluent limitations. Where a compliance schedule for a final effluent limitation exceeds 1 year, the Order must include interim numeric limitations for that constituent or parameter. Where allowed by the Basin Plan, compliance schedules and interim effluent limitations or discharge specifications may also be granted to allow time to implement a new, revised or newly interpreted water quality objective. This Order includes compliance schedules and interim effluent limitations and/or discharge specifications. A detailed discussion of the basis for the compliance schedule(s) and interim effluent limitation(s) and/or discharge specifications is included in the Fact Sheet.

---

2 Member agencies and sewering agencies discharging wastewater into the facility.

N. **Alaska Rule.** On March 30, 2000, USEPA revised its regulation that specifies when new and revised State and Tribal water quality standards (WQS) become effective for CWA purposes (40 CFR 131.21, 65 FR 24641, April 27, 2000). Under the revised regulation (also known as the Alaska rule), new and revised standards submitted to USEPA after May 30, 2000, must be approved by USEPA before being used for CWA purposes. The final rule also provides that standards already in effect and submitted to USEPA by May 30, 2000, may be used for CWA purposes, whether or not approved by USEPA.

O. **Stringency of Requirements for Individual Pollutants.** This Order contains both technology-based and water quality based effluent limitations for individual pollutants. The technology-based effluent limitations consist of restrictions on BOD_5 and Suspended Solids. Restrictions on the same pollutants are discussed in Section IV.B.2. of Attachment F. This Order's technology-based pollutant restrictions implement the minimum, applicable federal technology-based requirements. In addition, this Order contains effluent limitations more stringent than the minimum, federal technology-based requirements that are necessary to meet water quality standards. These limitations are not more stringent than required by the CWA.

Water quality-based effluent limitations have been scientifically derived to implement water quality objectives that protect beneficial uses. Both the beneficial uses and the water quality objectives have been approved pursuant to federal law and are the applicable federal water quality standards. To the extent that toxic pollutant water quality-based effluent limitations were derived from the CTR, the CTR is the applicable standard pursuant to 40 CFR 131.38. The scientific procedures for calculating the individual water quality-based effluent limitations for priority pollutants are based on the CTR-SIP, which was approved by USEPA on May 18, 2000. Apart from certain surface water standards changes resulting from the N/TDS Basin Plan amendment that do not materially affect the quality requirements for the discharges regulated by this Order, all beneficial uses and water quality objectives contained in the Basin Plan were approved under state law and submitted to and approved by USEPA prior to May 30, 2000.

Any water quality objectives and beneficial uses submitted to USEPA prior to May 30, 2000, but not approved by USEPA before that date, are nonetheless "applicable water quality standards for purposes of the CWA" pursuant to 40 CFR 131.21(c)(1). Collectively, this Order's restrictions on individual pollutants are no more stringent than required to implement the technology-based requirements of the CWA and the applicable water quality standards for purposes of the CWA.

P. **Antidegradation Policy.** Section 131.12 of 40 CFR requires that State water quality standards include an antidegradation policy consistent with the federal policy. The State Water Board established California's antidegradation policy in State Water Board Resolution No. 68-16. Resolution No. 68-16 incorporates the federal antidegradation policy where the federal policy applies under federal law. Resolution No. 68-16 requires that existing quality of waters be maintained unless degradation is justified based on specific findings. The Regional Water Board's Basin Plan implements, and incorporates by reference, both the State and federal antidegradation policies. As discussed in detail in the Fact Sheet the permitted discharge is consistent with the antidegradation provision of 40 CFR Section 131.12 and State Water Board Resolution No. 68-16.

Q. **Anti-Backsliding Requirements.** Sections 402(o)(2) and 303(d)(4) of the CWA and federal regulations at title 40, Code of Federal Regulations section 122.44(l) prohibit backsliding in NPDES permits. These anti-backsliding provisions require effluent limitations in a reissued permit to be as stringent as those in the previous permit, with some exceptions where limitations may be relaxed. All effluent limitations in this Order are at least as stringent as the effluent limitations in the previous Order No. 01-79.

R. **Monitoring and Reporting.** Section 122.48 requires that all NPDES permits specify requirements for recording and reporting monitoring results. Water Code sections 13267 and 13383 authorizes the Regional Water Board to require technical and monitoring reports. The Monitoring and Reporting Program establishes monitoring and reporting requirements to implement federal and State requirements. This Monitoring and Reporting Program is provided in Attachment E.

S. **Biosolids Requirements.** On February 19, 1993, the USEPA issued a final rule for the use and disposal of sewage sludge, 40 CFR, Part 503. This rule requires that producers of sewage sludge meet certain reporting, handling, and disposal requirements. The State of California has not been delegated the authority to implement this program, therefore, the U.S. Environmental Protection Agency is the implementing agency. The Biosolids produced at the Facility is piped to the City of Corona's Plant No. 2. This Order includes Regional Board biosolids requirements.

T. **Standard and Special Provisions.** Standard Provisions, which apply to all NPDES permits in accordance with section 122.41, and additional conditions applicable to specified categories of permits in accordance with section 122.42, are provided in Attachment D. The Discharger must comply with all standard provisions and with those additional conditions that are applicable under section 122.42. The Regional Water Board has also included in this Order special provisions applicable to the Discharger. A rationale for the special provisions contained in this Order is provided in the attached Fact Sheet.

U. **Provisions and Requirements Implementing State Law.** The provisions/requirements in subsections IV.A and IV.B. of this Order are included to implement state law only. These provisions/requirements are not required or authorized under the federal CWA; consequently, violations of these provisions/requirements are not subject to the enforcement remedies that are available for NPDES violations.

V. **Notification of Interested Parties.** The Regional Water Board has notified the Discharger and interested agencies and persons of its intent to prescribe Waste Discharge Requirements for the discharge and has provided them with an opportunity to submit their written comments and recommendations. Details of notification are provided in the Fact Sheet (Attachment F) of this Order.

W. **Consideration of Public Comment.** The Regional Water Board, in a public meeting, heard and considered all comments pertaining to the discharge. Details of the Public Hearing are provided in the Fact Sheet (Attachment F) of this Order.

III. DISCHARGE PROHIBITIONS

A. Wastewater discharged shall be limited to treated and disinfected effluent that meets the conditions and requirements specified in Section IV, below.

B. Discharge of wastewater at a location or in a manner different from those described in this Order is prohibited.

C. The bypass or overflow of untreated wastewater or wastes to surface waters or surface water drainage courses is prohibited, except as allowed in Standard Provisions - Permit Compliance I.G. of Attachment D, Standard Provisions.

D. The discharge of any substances in concentrations toxic to animal or plant life is prohibited.

E. There shall be no visible oil and grease in the discharge.

F. The discharge of any radiological, chemical, or biological warfare agent or high level radiological waste is prohibited.

IV. EFFLUENT LIMITATIONS AND DISCHARGE SPECIFICATIONS

A. Effluent Limitations – Discharge Point (DP 001)

1. Final Effluent Limitations - DP 001

Unless otherwise specifically specified herein, compliance shall be measured at monitoring location M-001 as described in the attached MRP (Attachment E):

a. The discharge shall maintain compliance with the following effluent limitations at DP 001:

Table 7. Effluent Limitations

Parameter	Units	Effluent Limitations				
		Average Monthly	Average Weekly	Maximum Daily	Instantaneous Minimum	Instantaneous Maximum
Biochemical Oxygen Demand 5-day @ 20°C	mg/L	20	30	--	--	--
	lbs/day[1]	167	250	--	--	--
Total Suspended Solids	mg/L	20	30	--	--	--
	lbs/day[1]	167	250	--	--	--
pH	standard units	--	--	--	6.5	8.5
Total Chlorine Residual	mg/L	--	--	--	--	0.1
Ammonia-Nitrogen	mg/L	4.5	--	--	--	--
	lbs/day[1]	38	--	--	--	--
Bis(2-ethylhexyl) phthalate*	µg/L	5.9		11.8		
Total Recoverable Copper*	µg/L	41.8	--	84	--	--
Total Recoverable Mercury*	µg/L	0.051	--	0.102	--	--
Total Recoverable Selenium*	µg/L	4.1	--	8.2	--	--
Total Recoverable Zinc*	µg/L	131	--	264	--	--

*Final Limits specified herein are effective on July 1, 2009. Interim effluent limitations are specified for these constituents in IV.A.2., below.

b. The average monthly percent removal of BOD 5-day 20^{0}C and total suspended solids shall not be less than 85 percent.

c. TDS Limitations - The lower of the two total dissolved solids (TDS) limits specified in (1) or (2), below, is the limit:

(1) The 12-month flow weighted running average TDS constituent concentrations and mass emission rates shall not exceed 700 mg/L and 5,838 lbs/day[3], respectively, unless:

(a) The Discharger demonstrates to the satisfaction of the Regional Board's Executive Officer that:

[3] *Derived from 1mgd x 8.34 x concentration, mg/L.*

i. Discharges in excess of the TDS limits are due to the quality of water supply sources utilized in the Discharger's service area, and that all reasonable steps, as agreed upon by the Executive Officer, have been taken to ensure that the best quality supplies are obtained and utilized in the Discharger's service area; or

ii. Discharges in excess of the TDS limits are due solely to chemical additions in the treatment process needed to meet waste discharge requirements, and the Discharger has taken all steps to optimize chemical additions so as to minimize the increases; and

(b) The Discharger implements a plan, with the approval of the Executive Officer, to offset discharges in excess of the concentrations and mass emission rates. See Section VI.C.2.c., below.

(2) The 12-month flow weighted running average total dissolved solids concentration shall not exceed the 12-month flow weighted running average total dissolved solids concentration in the water supply by more than 250 mg/L[4], unless:

(a) The Discharger demonstrates to the satisfaction of the Regional Board's Executive Officer that TDS discharges in excess of the 250 mg/L mineral increment are due solely to chemical additions in the treatment process needed to meet waste discharge requirements, and the Discharger has taken all steps to optimize chemical additions so as to minimize the TDS increases; and

(b) The Discharger implements a plan, with the approval of the Executive Officer, to offset TDS discharges in excess of the 250 mg/L mineral increment. See Section VI.C.2.c., below.

d. Total Inorganic Nitrogen (TIN) Limitations, with compliance measured at monitoring locations at M-001. The 12-month flow weighted running average TIN concentration and mass emission rates of the discharge shall not exceed 10 mg/L and 83 lbs/day[1], respectively, unless the Discharger implements a plan, with the approval of the Executive Officer, to offset TIN discharges in excess of the TIN limits. See Section VI.C.2.c., below.

e. The discharge shall at all times be adequately oxidized, filtered, and disinfected treated wastewater and shall meet the following limitations:

---

4 *An exceedance of this limit shall not be considered a violation, provided it is due solely to chemical additions in the treatment process needed to meet waste discharge requirements or other valid regulatory requirements. The TDS quality used to evaluate compliance with the water supply mineral increment may be measured at influent or secondary effluent.*

1) The turbidity of the filter effluent shall not exceed any of the following:

   (a) 0.2 Nephelometric Turbidity Unit (NTU) more than 5 percent of the time within any 24-hour period; and

   (b) 0.5 NTU at any time.

2) Disinfected effluent shall meet the following criteria:

   (a) The 7-day median number of total coliform shall not exceed a Most Probable Number (MPN) of 2.2 total coliform bacteria per 100 milliliters (ml).

   (b) The number of total coliform organism shall not exceed an MPN of 23 total coliform bacteria per 100 ml in more than one sample in any 30-day period, and

   (c) No total coliform sample shall exceed an MPN of 240 total coliform bacteria per 100 ml.

   (d) A chlorine disinfection process following filtration that provides a CT (the product of total chlorine residual and modal contact time5 measured at the same point) value of not less than 450 milligram-minutes per liter at all times with a modal contact time of at least 90 minutes, based on peak dry weather design flow.

f. There shall be no visible oil and grease in the discharge.

2. Interim Effluent Limitations – DP 001

During the period beginning April 20, 2007 and ending on June 30, 2009, the discharge of treated effluent shall maintain compliance with the following limitations at Discharge Points 001, with compliance measured at Monitoring Locations M-001as described in the attached MRP. These interim effluent limitations shall apply during this period in lieu of the final effluent limitations specified for these parameters in IV. A. 1. a.

Table 8. Interim Effluent Limitations at DP 001

Parameter	Units	Average Monthly	Maximum Daily
Bis(2-ethylhexyl) phthalate*	µg/L	53	53
Total Recoverable Copper	µg/L	63	84
Total Recoverable Mercury	µg/L	0.4	0.4
Total Recoverable Selenium	µg/L	14	14

5 Modal contact time shall be calculated daily based on the minimum one-hour average value in a 24-hour period.

Table 8. Interim Effluent Limitations at DP 001

Parameter	Units	Average Monthly	Maximum Daily
Total Recoverable Zinc	µg/L	223	264

2. Toxicity Requirements - DP 001

Compliance with toxicity requirements shall be measured at monitoring location M-001.

a. There shall be no acute or chronic toxicity in the plant effluent nor shall the plant effluent cause any acute or chronic toxicity in the receiving water. All waters shall be maintained free of toxic substances in concentrations which are toxic to, or which produce detrimental physiological responses in human, plant, animal, or indigenous aquatic life. This Order contains no numeric limitation for toxicity. However, the Discharger shall conduct chronic toxicity monitoring.

b. The Discharger shall implement the accelerated monitoring as specified in Attachment E when the result of any single chronic toxicity test of the effluent exceeds 1.0 TUc.

B. Reclamation Specifications – DP 002

1. Upon the effective date of this Order, the use of recycled water for parks, golf course/landscape irrigation or other similar uses shall maintain compliance with the following limitations. Compliance is to be measured at monitoring location REC-001 or at other approved monitoring locations where representative samples of recycled water can be obtained for laboratory testing and analysis as described in the attached Monitoring and Reporting Program (Attachment E). The Discharger shall submit for approval by the Executive Officer other monitoring location(s) not specified herein where representative samples of recycled water could be obtained for laboratory testing and analysis.

a. Physical/Biological Limitations:

Table 9. Reclaimed Effluent Limitations

Parameter	Units	Recycled Water Limitations				
		Average Monthly	Average Weekly	Maximum Daily	Instantaneous Minimum	Instantaneous Maximum
Biochemical Oxygen Demand 5-day @ 20°C	mg/L	20	30	- -	- -	- -
Total Suspended Solids	mg/L	20	30	- -	- -	- -
pH	standard units	- -	- -	- -	6	9

b. Total Dissolved Solids (TDS) Limitations: 12-month flow weighted running average TDS concentration in recycled water shall not exceed 770 mg/L, unless the Discharger implements an approved offset program. See Section VI.C.2.c., below.

c. Recycled water described in Section 60307(a) of Division 4, Chapter 3, Title 22, California Code of Regulations and for irrigation of food crops, parks and playground, school yards, residential landscaping and other irrigation uses not specified in Section 60304(a) of Division 4, Chapter 3, Title 22, California Code of Regulations or not prohibited in other Sections of the California Code of Regulations shall at all times be adequately oxidized, filtered, and disinfected tertiary treated wastewater and shall meet the following limitations, with compliance measured at monitoring location REC-001:

1) The turbidity of the filter effluent shall not exceed any of the following:

a) 0.2 Nephelometric Turbidity Unit (NTU) more than 5 % of the time within a 24-hour period; and

b) 0.5 NTU at any time.

2) The disinfected effluent shall meet the following:

a) The weekly average total coliform bacteria[6] shall not exceed a Most Probable Number (MPN) of 2.2 total coliform bacteria per 100 milliliters (ml).

b) The number of total coliform organism shall not exceed an MPN of 23 total coliform bacteria per 100 ml in more than one sample in any 30-day period.

c) No total coliform sample shall exceed an MPN of 240 total coliform bacteria per 100 ml.

d) When chlorine disinfection process is utilized followed by filtration, a CT (the product of total chlorine residual and modal contact time[7] measured at the same point) value of not less than 450 milligram-minutes per liter at all times with a modal contact time of at least 90 minutes, based on peak dry weather design flow shall be provided.

e) When a disinfection process combined with the filtration process is utilized, the combined process shall demonstrate inactivation and/or removal of 99.999 percent of the plaque-forming units of F-specific bacteriophage MS2, or polio virus in the wastewater. A virus that is at least as resistant to disinfection as polio virus may be used for purposes of the demonstration.

---

6 See Compliance Determination Section VII.K.1.

7 Modal contact time shall be calculated daily based on the minimum one-hour average value in a 24-hour period.

d. Recycled water used for irrigation of food crops where the edible portion is produced above ground and not contacted by the recycled water shall at all times be adequately oxidized and disinfected so that average weekly total coliform bacteria in the disinfected effluent does not exceed a most probable number (MPN) of 2.2 per 100 milliliters utilizing the bacteriological results of the last seven days for which analyses have been completed, and the number of total coliform bacteria does not exceed an MPN of 23 per 100 milliliters in more than one sample.

e. Recycled water used for the uses listed below shall be an oxidized and disinfected water so that average weekly total coliform bacteria[8] in the disinfected effluent does not exceed a most probable number (MPN) of 23 per 100 milliliters utilizing the bacteriological results of the last seven days for which analyses have been completed, and the number of total coliform bacteria does not exceed an MPN of 240 per 100 milliliters in more than one sample in any 30 day period.

   1) Industrial boiler feed, nonstructural fire fighting, backfill consolidation around nonpotable piping, soil compaction, mixing concrete, dust control on roads and streets, cleaning roads, sidewalks and outdoor work areas and industrial process water that will not come into contact with workers.
   2) Irrigation of cemeteries, freeway landscaping, restricted access golf courses, ornamental nursery stock and sod farms where access by the general public is not restricted, pasture for animals producing milk for human consumption, and any nonedible vegetation where access is controlled so that irrigated area cannot be used as if it were part of a park, playground or school yard.

f. For recycled water uses specified in Sections 60304 and 60307 of Title 22 where filtration is provided pursuant Section 60301.320(a) and coagulation is not used as part of the treatment process, the Discharger shall comply with the following:

   1) The turbidity of the influent to the filters is continuously measured and the influent turbidity does not exceed 5 NTU for more than 15 minutes and never exceeds 10 NTU;
   2) The filter effluent turbidity shall not exceed 2 NTU; and;
   3) Should the filter influent turbidity exceed 5 NTU for more than 15 minutes, chemical addition shall be automatically activated if available, if not, the wastewater shall be diverted.

2. For new reuse sites, the use of recycled water shall only commence after the California Department of Health Services (CDHS) grants final approval for such use. The Discharger shall provide the Regional Water Board with a copy of the CDHS approval letter within 30 days of the approval notice.

---

8 See Compliance Determination Section VII.K.2.

3. The Discharger shall be responsible for assuring that recycled water is delivered and utilized in conformance with this Order, the recycling criteria contained in Title 22, Division 4, Chapter 3, Sections 60301 through 60355, California Code of Regulations, the Discharger shall conduct periodic inspections of the facilities of the recycled water users to monitor compliance by the users with this Order.

4. The Discharger shall establish and enforce Rules and Regulations for Recycled Water users, governing the design and construction of recycled water use facilities and the use of recycled water in accordance with the uniform statewide recycling criteria established pursuant to the California Water Code Section 13521.

   a. Use of recycled water by the Discharger shall be consistent with its Rules and Regulations for Recycled Water Use.

   b. Any revisions made to the Rules and Regulations shall be subject to the review of the Regional Water Board, the California Department of Health Services, and the County Environmental Health Department. The revised Rules and Regulations or a letter certifying that the Discharger's Rules and Regulations contain the updated provisions in this Order, shall be submitted to the Regional Water Board within 60 days of adoption of this Order by the Regional Water Board.

5. The Discharger shall, within 60 days of the adoption of this Order, review and update as necessary its program to conduct compliance inspections of recycled water reuse sites. Inspections shall determine the status of compliance with the Discharger's Rules and Regulations for Recycled Water Use.

6. The storage, delivery, or use of recycled water shall not individually or collectively, directly or indirectly, result in a pollution or nuisance, or adversely affect water quality, as defined in the California Water Code

7. Prior to delivering recycled water to any new user, the Discharger shall submit to the Regional Water Board, the California Department of Health Services and the County Environmental Health Department a report containing the following information for review and approval:

   a. The average number of persons estimated to be served at each use site area on a daily basis.
   b. The specific boundaries of the proposed use site area including a map showing the location of each facility, drinking water fountain, and impoundment to be used.
   c. The person or persons responsible for operation of the recycled water system at each use area.
   d. The specific use to be made of the recycled water at each use area.

e. The methods to be used to assure that the installation and operation of the recycled system will not result in cross connections between the recycled water and potable water piping systems. This shall include a description of the pressure, dye or other test methods to be used to test the system.

f. Plans and specifications which include following:

1) Proposed piping system to be used.
2) Pipe locations of both the recycled and potable systems.
3) Type and location of the outlets and plumbing fixtures that will be accessible to the public.
4) The methods and devices to be used to prevent backflow of recycled water into the potable water system.
5) Plan notes relating to specific installation and use requirements.

8. The Discharger shall require the user(s) to designate an on-site supervisor responsible for the operation of the recycled water distribution system within the recycled water use area. The supervisor shall be responsible for enforcing this Order, prevention of potential hazards, the installation, operation and maintenance of the distribution system, maintenance of the distribution and irrigation system plans in "as-built" form, and for the distribution of the recycled wastewater in accordance with this Order.

V. RECEIVING WATER LIMITATIONS

A. Surface Water Limitations

1. Receiving water limitations are based upon water quality objectives contained in the Basin Plan. As such, they are a required part of this Order. The discharge shall not cause the following in Temescal Creek, Reach 1 or the Santa Ana River, Reach 3, or in downstream Reaches of the Santa Ana River:

a. Coloration of the receiving waters, which causes a nuisance or adversely affects beneficial uses.
b. Deposition of oil, grease, wax or other materials in the receiving waters in concentrations which result in a visible film or in coating objects in the water, or which cause a nuisance or affect beneficial uses.
c. An increase in the amounts of suspended or settleable solids in the receiving waters, which will cause a nuisance or adversely affect beneficial uses as a result of controllable water quality factors.
d. Taste or odor-producing substances in the receiving waters at concentrations, which cause a nuisance or adversely affect beneficial uses.
e. The presence of radioactive materials in the receiving waters in concentrations, which are deleterious to human, plant or animal life.
f. The depletion of the dissolved oxygen concentration below 5.0 mg/L.
g. The temperature of the receiving waters to be raised above 90°F (32°C) during the period of June through October, or above 78°F (26°C) during the rest of the year.

h. The concentration of pollutants in the water column, sediments, or biota to adversely affect the beneficial uses of the receiving water. The discharge shall not result in the degradation of inland surface water communities and populations, including vertebrate, invertebrate, and plant species.

2. The discharge of wastes shall not cause a violation of any applicable water quality standards for receiving waters adopted by the Regional Water Board or State Water Board, as required by the Clean Water Act and regulations adopted thereunder.

3. Pollutants not specifically mentioned and limited in this Order shall not be discharged at levels that will bioaccumulate in aquatic resources to levels, which are harmful to human health.

4. The discharge shall not contain constituent concentrations of mercury that will result in the bioaccumulation of methylmercury in fish flesh tissue greater than 0.3 milligram methylmercury/kilogram. (See also Section VI.C.1.b. and VI.C.2., below).

B. Groundwater Limitations

1. The use of recycled water shall not cause the underlying groundwater to be degraded, to exceed water quality objectives, unreasonably affect beneficial uses, or cause a condition of pollution or nuisance.

VI. PROVISIONS

A. Standard Provisions

1. The Discharger shall comply with all Standard Provisions included in Attachment D of this Order.

2. Failure to comply with provisions or requirements of this Order, or violation of other applicable laws or regulations governing discharges from this facility, may subject the Discharger to administrative or civil liabilities, criminal penalties, and/or other enforcement remedies to ensure compliance. Additionally, certain violations may subject the Discharger to civil or criminal enforcement from appropriate local, state, or federal law enforcement entities.

3. In the event the Discharger does not comply or will be unable to comply for any reason, with any prohibition, discharge limitations (e.g., maximum daily effluent limitation), or receiving water limitation of this Order, the Discharger shall notify the Regional Water Board by telephone (951) 782-4130 within 24 hours of having knowledge of such noncompliance, and shall confirm this notification in writing within five days, unless the Regional Board waives confirmation. The written notification shall state the nature, time, duration, and cause of noncompliance, and shall describe the measures being taken to remedy the current noncompliance and, prevent recurrence including, where applicable, a schedule of implementation. Other noncompliance requires written notification as above at the time of the normal monitoring report.

4. Neither the treatment nor the discharge of pollutants shall create a pollution, contamination, or nuisance as defined by Section 13050 of the CWC.

5. The Discharger shall take all reasonable steps to minimize or correct any adverse impact on the environment resulting from noncompliance with this Order, including such accelerated or additional monitoring as may be necessary to determine the nature and impact of the noncomplying discharge.

6. This Order may be modified, revoked and reissued, or terminated for cause including, but not limited to, the following.

   a. Violation of any terms or conditions of this Order;
   b. Obtaining this Order by misrepresentation or failure to disclose fully all relevant facts, or;

7. In addition to any other grounds specified herein, this permit may be modified or revoked at any time if, on the basis of any data, the Regional Water Board determines that continued discharges may cause unreasonable degradation of the aquatic environment.

8. If an effluent standard or discharge prohibition (including any schedule of compliance specified in such effluent standard or prohibition) is established under Section 307 (a) of the Clean Water Act for a toxic pollutant which is present in the discharge, and such standard or prohibition is more stringent than any limitation for that pollutant in this Order, this Order may be modified or revoked and reissued to conform to the effluent standard or discharge prohibition.

9. The Discharger shall file with the Regional Board a Report of Waste Discharge at least 180 days before making any material change in the character, location, or volume of the discharge. A material change includes, but is not limited to, the following:

   a. Adding a major industrial waste discharge to a discharge of essentially domestic sewage, or adding a new process or product by an industrial facility resulting in a change in the character of the waste.
   b. Significantly changing the disposal method or location, such as changing the disposal to another drainage area or water body.
   c. Significantly changing the method of treatment.
   d. Increasing the treatment plant design capacity beyond that specified in this Order.

10. The provisions of this Order are severable, and if any provisions of this Order, or the application of any provision of this Order to any circumstances, is held invalid, the application of such provision to other circumstances, and the remainder of this Order, shall not be affected thereby.

11. The Discharger shall maintain a copy of this Order at the site so that it is available to site operating personnel at all times. Key operating personnel shall be familiar with its content.

12. The Discharger shall optimize chemical additions needed in the treatment process to meet waste discharge requirements so as to minimize total dissolved solid increases in the treated wastewater.

13. Collected screenings, sludge, and other solids removed from liquid wastes shall be disposed of in a manner approved by the Regional Water Board's Executive Officer.

14. If the Discharger demonstrates a correlation between the biological oxygen demand (BOD5) and total organic carbon (TOC) concentrations in the effluent to the satisfaction of the Executive Officer, compliance with the BOD5 limits contained in this Order may be determined based on analyses of the TOC of the effluent.

15. In the event of any change in control or ownership of land or waste discharge facility presently owned or controlled by the Discharger, the Discharger shall notify the succeeding owner or operator of the existence of this Order by letter, a copy of which shall be forwarded to the Regional Water Board.

16. The treatment facilities shall be designed, constructed, operated, and maintained to prevent inundation or washout due to floods with a 100-year return frequency.

B. Monitoring and Reporting Program Requirements

The Discharger shall comply with the MRP, and future revisions thereto, in Attachment E of this Order. This monitoring and reporting program may be modified by the Executive Officer at any time during the term of this Order, and may include an increase in the number of parameters to be monitored, the frequency of the monitoring or the number and size of samples to be collected. Any increase in the number of parameters to be monitored, the frequency of the monitoring or the number and size of samples to be collected may be reduced back to the levels specified in the original monitoring and reporting program at the discretion of the Executive Officer.

C. Special Provisions

1. Reopener Provisions

a. This Order may be reopened to address any changes in State or federal plans, policies or regulations that would affect the quality requirements for the discharges.

b. This Order may be reopened to include effluent limitations for pollutants determined to be present in the discharge in concentrations that pose a reasonable potential to cause or contribute to violations of water quality objectives.

c. This Order may be reopened and modified in accordance with the requirements set forth at 40 CFR 122 and 124, to include the appropriate conditions or limits to address demonstrated effluent toxicity based on newly available information, or to implement any EPA-approved new State water quality standards applicable to effluent toxicity.

d. This Order may be reopened for modification, or revocation and reissuance, as a result of the detection of a reportable priority pollutant generated by special conditions included in this Order. These special conditions may be, but are not limited to, fish tissue sampling, whole effluent toxicity, monitoring requirements on internal waste stream(s), and monitoring for surrogate parameters. Additional requirements may be included in this Order as a result of the special condition monitoring data.

e. This Order may be reopened to include an appropriate bioaccumulation based effluent limit for mercury if test results (as required in Attachment E of this Order) show that the concentration levels of methylmercury in the fish tissue are at or above 0.3 milligrams per kilogram.

f. This Order may be reopened to incorporate appropriate biosolids requirements if the State Water Resources Control Board and the Regional Water Quality Control Board are given the authority to implement regulations contained in 40 CFR 503.

2. Special Studies, Technical Reports and Additional Monitoring Requirements

a. By July 1, 2007, the Discharger shall notify the Executive Officer of its continuous involvement with the comprehensive mercury investigation program currently being conducted by a group of Santa Ana River system Dischargers. If the Discharger discontinues its involvement with this comprehensive program, the Discharger shall, within 60 days of that date, submit for the approval of the Executive Officer its plan for the annual testing of mercury levels in fish flesh samples collected from the Santa Ana River, upstream of, at, and downstream of the point of the discharge point. Upon approval, the Discharger shall implement the plan.

b. By July 1, 2007, the Discharger shall submit for approval by the Executive Officer, a report that details the manner in which sampling, monitoring and reporting will be performed as required in the Order.

c. By July 1, 2007, the Discharger shall submit for approval by the Executive Officer, a report that details the proposed offset program and the manner by which TDS discharges and offsets will be monitored and reported.

d. Toxicity Reduction Requirements.

1) The Discharger shall develop an Initial Investigation Toxicity Reduction Evaluation (IITRE) work plan that describes the steps the Discharger intends to follow if required by Toxicity Requirement f. 4), below. The work plan shall include at a minimum:

a) A description of the investigation and evaluation techniques that will be used to identify potential causes/sources of the exceedance, effluent variability, and/or efficiency of the treatment system in removing toxic substances. This shall include a description of an accelerated chronic toxicity testing program.
b) A description of the methods to be used for investigating and maximizing in-house treatment efficiency and good housekeeping practices.
c) A description of the evaluation process to be used to determine if implementation of a more detailed TRE\TIE is necessary.

2) The Discharger shall implement the IITRE work plan whenever the results of chronic toxicity tests of the effluent exceed:

a) A two month median value of 1.0 TUc for survival or reproduction endpoint or,
b) Any single test value of 1.7 TUc for survival endpoint.

3) The Discharger shall develop a detailed Toxicity Reduction Evaluation and Toxicity Identification Evaluation (TRE/TIE) work plan that shall describe the steps the Discharger intends to follow if the implemented IITRE fails to identify the cause of, or to rectify, the toxicity.

4) The Discharger shall use as guidance, at a minimum, EPA manuals EPA/600/2-88/070 (industrial), EPA/600/4-89-001A (municipal), EPA/600/6-91/005F (Phase I), EPA/600/R-92/080 (Phase II), and EPA-600/R-92/081 (Phase III) to identify the cause(s) of toxicity. If during the life of this Order the aforementioned EPA manuals are revised or updated, the revised/updated manuals may also be used as guidance. The detailed TRE/TIE work plan shall include:

a) Further actions to investigate and identify the cause of toxicity;
b) Actions the Discharger will take to mitigate the impact of the discharge and to prevent the recurrence of toxicity; and
c) A schedule for these actions.

5) The Discharger shall implement the TRE/TIE workplan if the IITRE fails to identify the cause of, or rectify, the toxicity, or if in the opinion of the Executive Officer the IITRE does not adequately address an identified toxicity problem.

6) The Discharger shall assure that adequate resources are available to implement the required TRE/TIE.

3. Best Management Practices and Pollution Prevention

a. Pollutant Minimization Program

1) The Discharger shall develop and conduct a Pollutant Minimization Program (PMP) as further described below when there is evidence (e.g., sample results reported as DNQ when the effluent limitation is less than the MDL, sample results from analytical methods more sensitive than those methods required by this Order, presence of whole effluent toxicity, health advisories for fish consumption, results of benthic or aquatic organism tissue sampling) that a priority pollutant is present in the effluent above an effluent limitation and either:

   a) A sample result is reported as DNQ and the effluent limitation is less than the RL; or
   b) A sample result is reported as ND and the effluent limitation is less than the MDL.

2) The PMP shall include, but not be limited to, the following actions and submittals acceptable to the Regional Water Board:

   a) An annual review and semi-annual monitoring of potential sources of the reportable priority pollutant(s), which may include fish tissue monitoring and other bio-uptake sampling;
   b) Quarterly monitoring for the reportable priority pollutant(s) in the influent to the wastewater treatment system;
   c) Submittal of a control strategy designed to proceed toward the goal of maintaining concentrations of the reportable priority pollutant(s) in the effluent at or below the effluent limitation;
   d) Implementation of appropriate cost-effective control measures for the reportable priority pollutant(s), consistent with the control strategy; and
   e) An annual status report that shall be sent to the Regional Water Board including:

      (1) All PMP monitoring results for the previous year;
      (2) A list of potential sources of the reportable priority pollutant(s);
      (3) A summary of all actions undertaken pursuant to the control strategy; and
      (4) A description of actions to be taken in the following year.

4. Construction, Operation and Maintenance Specifications

a. The Discharger's wastewater treatment plant shall be supervised and operated by persons possessing certificates of appropriate grade pursuant to Title 23, Division 3, Chapter 14, California Code of Regulations.

b. The Discharger shall provide safeguards to assure that should there be reduction, loss, or failure of electric power, the Discharger will comply with the requirements of this Order.

c. The Discharger shall update as necessary, the "Operation and Maintenance Manual (O&M Manual)" which it has developed for the treatment facility to conform to latest plant changes and requirements. The O&M Manual shall be readily available to operating personnel onsite. The O&M Manual shall include the following:

1) Description of the treatment plant table of organization showing the number of employees, duties and qualifications and plant attendance schedules (daily, weekends and holidays, part-time, etc). The description should include documentation that the personnel are knowledgeable and qualified to operate the treatment facility so as to achieve the required level of treatment at all times.
2) Detailed description of safe and effective operation and maintenance of treatment processes, process control instrumentation and equipment.
3) Description of laboratory and quality assurance procedures.
4) Process and equipment inspection and maintenance schedules.
5) Description of safeguards to assure that, should there be reduction, loss, or failure of electric power, the Discharger will be able to comply with requirements of this Order.
6) Description of preventive (fail-safe) and contingency (response and cleanup) plans for controlling accidental discharges, and for minimizing the effect of such events. These plans shall identify the possible sources (such as loading and storage areas, power outage, waste treatment unit failure, process equipment failure, tank and piping failure) of accidental discharges, untreated or partially treated waste bypass, and polluted drainage.

5. Special Provisions for Municipal Facilities (POTWs Only)

a. The Discharger's collection system is part of the system that is subject to this Order. As such, the Discharger must properly operate and maintain its collection system (40 C.F.R. § 122.41(e)). The Discharger must report any non-compliance (40 C.F.R. § 122.41(l)(6) and (7)) and mitigate any discharge from the collection system in violation of this Order (40 C.F.R. § 122.41(d)). See the Order at Standard Provision VI.A.2.b. and Attachment D, subsections I.D, V.E, V.H, and I.C.

Furthermore, the General Waste Discharge Requirements for Collection System Agencies (Order No. 2006-0003 DWQ) contains requirements for operation and maintenance of collection systems and for reporting and mitigating sanitary sewer overflows. While the Discharger must comply with both Order No. 2006-0003 DWQ and this Order, the General Collection System WDR more clearly and specifically stipulates requirements for operation and maintenance and for reporting and mitigating sanitary sewer overflows. The Discharger and other governmental agencies that are discharging wastewater into the facility are required to obtain enrollment for regulation under Order No. 2006-0003-DWQ by July 1, 2007.

b. Sludge Disposal Requirements

1) Collected screenings, sludge, and other solids removed from liquid wastes shall be disposed of in a manner that is consistent with State Water Resources Control Board and Integrated Waste Management Board's joint regulations (Title 27) of the California Code of Regulations and approved by the Water Board's Executive Officer.
2) The use and disposal of biosolids shall comply with existing Federal and State laws and regulations, including permitting requirements and technical standards included in 40 CFR 503.
3) Any proposed change in biosolids use or disposal practice from a previously approved practice should be reported to the Executive Officer and EPA Regional Administrator at least 90 days in advance of the change.
4) The Discharger shall take all reasonable steps to minimize or prevent any discharge or biosolids use or disposal that has the potential of adversely affecting human health or the environment.

c. Pretreatment Program – Not Applicable

6. Other Special Provisions – Not Applicable

7. Compliance Schedules – DP 001

a. This Order requires the Discharger to achieve compliance with the final limitations for Bis(2-ethylhexyl)Phthalate, Copper, Mercury, Selenium, and Zinc, by June 30, 2009. Quarterly reports on progress to achieve compliance with the final limitations shall be submitted.

b. Violation(s) of interim effluent limitations are subject to the same enforcement remedies provided in the Water Code for violation(s) of final effluent limits.

c. This Order will be reopened to consider appropriate changes to the compliance schedule if and as necessary based on submission of additional justification.

VII. COMPLIANCE DETERMINATION

Compliance with the effluent limitations contained in Section IV of this Order will be determined as specified below:

A. General.
Compliance with effluent limitations for priority pollutants shall be determined using sample reporting protocols defined in the MRP and Attachment A of this Order. For purposes of reporting and administrative enforcement by the Regional and State Water Boards, the Discharger shall be deemed out of compliance with effluent limitations if the concentration of the priority pollutant in the monitoring sample is greater than the effluent limitation and greater than or equal to the reporting level (RL).

C. Average Monthly Effluent Limitation (AMEL).
If the average (or when applicable, the median for multiple sample data, see Attachment E Section X.B.5.) of daily discharges over a calendar month exceeds the AMEL for a given parameter, this will represent a single violation, though the Discharger will be considered out of compliance for each day of that month for that parameter (e.g., resulting in 31 days of non-compliance in a 31-day month). If only a single sample is taken during the calendar month and the analytical result for that sample exceeds the AMEL, the Discharger will be considered out of compliance for that calendar month. The Discharger will only be considered out of compliance for days when the discharge occurs. For any one calendar month during which no sample (daily discharge) is taken, no compliance determination can be made for that calendar month.

D. Average Weekly Effluent Limitation (AWEL).
If the average (or when applicable, the median for multiple sample data, see Attachment E Section X.B.5.) of daily discharges over a calendar week exceeds the AWEL for a given parameter, this will represent a single violation, though the Discharger will be considered out of compliance for each day of that week for that parameter, resulting in 7 days of non-compliance. If only a single sample is taken during the calendar week and the analytical result for that sample exceeds the AWEL, the Discharger will be considered out of compliance for that calendar week. The Discharger will only be considered out of compliance for days when the discharge occurs. For any one calendar week during which no sample (daily discharge) is taken, no compliance determination can be made for that calendar week.

E. Maximum Daily Effluent Limitation (MDEL).
If a daily discharge (or when applicable, the median for multiple sample data, see Attachment E Section X.B.5.) exceeds the MDEL for a given parameter, the Discharger will be considered out of compliance for that parameter for that 1 day only within the reporting period. For any 1 day during which no sample is taken, no compliance determination can be made for that day.

F. Instantaneous Minimum Effluent Limitation.
If the analytical result of a single grab sample is lower than the instantaneous minimum effluent limitation for a parameter, the Discharger will be considered out of compliance for that parameter for that single sample. Non-compliance for each sample will be considered separately (e.g., the results of two grab samples taken within a calendar day that both are lower than the instantaneous minimum effluent limitation would result in two instances of non-compliance with the instantaneous minimum effluent limitation).

G. Instantaneous Maximum Effluent Limitation.
If the analytical result of a single grab sample is higher than the instantaneous maximum effluent limitation for a parameter, the Discharger will be considered out of compliance for that parameter for that single sample. Non-compliance for each sample will be considered separately (e.g., the results of two grab samples taken within a calendar day that both exceed the instantaneous maximum effluent limitation would result in two instances of non-compliance with the instantaneous maximum effluent limitation).

H. 12-Month Flow Weighted Running Average Effluent Limitation (12-MRAEL).
Compliance with the 12-month flow weighted running average limits under Discharge Specification IV.A.1.c., IV.A.1.d., IV.C.1.b., and IV.C.1.c. shall be determined by the arithmetic mean of the last twelve monthly averages.

I. Total Chlorine Residual Limitation (TCR).
Compliance determinations for total chlorine residual shall be based on 99% compliance. To determine 99% compliance with the effluent limitation for total chlorine residual, the following conditions shall be satisfied:

1. The total time during which the total chlorine residual values are above 0.1 mg/L (instantaneous maximum value) shall not exceed 7 hours and 26 minutes in any calendar month;
2. No individual excursion from 0.1 mg/L value shall exceed 30 minutes; and
3. No individual excursion shall exceed 2.0 mg/L.

J. Turbidity Limitations.
The Discharger shall be considered in compliance with Discharge Specifications IV.A.1.e. and IV.C.1.d. if the following conditions are met. If the Discharger is using a properly operating backup turbidimeter, the reading of the backup turbidimeter shall be considered in determining whether there has been an actual noncompliance:

a. There are no excursions above the limits specified in Discharge Specifications IV.A.1.e.(1)(a) and (b) and IV.C.1.e.(1)(a) and (b);
b. Exceedances of the "10 NTU at any time" turbidity requirement do not exceed a duration of one minute.
c. The apparent exceedance was caused by interference with, or malfunction of, the monitoring instrument.

K. Coliform Organism Effluent Limitations.

1. Compliance with the average weekly total coliform limit expressed in Discharge Specification IV.A.1.e.2. and IV.B.1.c.2) shall be based on a median of test results from the previous 7 days. To comply with the limit, the 7-day median MPN must not exceed 2.2 per 100 milliliters on any day during the week. However, only one violation is recorded for each calendar week, even if the 7-day median MPN value is greater than 2.2 for more than one day in the week.

2. Compliance with the average weekly total coliform limit expressed in Discharge Specification IV.B.1.e. shall be based on a median of test results from the previous 7 days. To comply with the limit, the 7-day median MPN must not exceed 23 per 100 milliliters on any day during the week. However, only one violation is recorded for each calendar week, even if the 7-day median MPN value is greater than 23 for more than one day in the week.

L. pH Effluent Limitations.

Pursuant to 40 CFR 401.17, the Discharger shall be in compliance with the pH limitations specified in the Discharge Specification IV.A.1.a, above, provided that both of the following conditions are satisfied:

1. The total time during which the pH values are outside the required range of 6.5-8.5 pH values shall not exceed 7 hours and 26 minutes in any calendar month; and
2. No individual excursion from the range of pH values shall exceed 60 minutes.

M. TDS Increment Limit.

Compliance with Discharge Specifications IV.A.1.c.2) shall be based on flow weighted TDS water supply quality and shall be determined from TDS analysis of secondary treated wastewater. The Discharger shall provide the necessary calculations showing the overall TDS water supply quality.

N. Priority Pollutants.

The Discharger shall be deemed out of compliance with an effluent limitation if the concentration of the priority pollutant in the monitoring sample is greater than the effluent limitation.

1. Compliance determination shall be based on the reporting level selected from minimum level (ML)[9] specified in Attachment "I" of this Order, unless an alternative reporting level is approved by the Regional Water Board's Executive Officer. When there is more than one ML value for a given substance, the Discharger shall select the ML value that is below the calculated effluent limitation, and use its associated analytical method, listed in Attachment "I" of this Order. If no ML value is below the effluent limitation, then the Regional Water Board will select as the reporting level the lowest ML value and its associated analytical method.

2. When determining compliance with an average monthly limit and more than one sample result is available in a month, the Discharger shall compute the arithmetic mean unless the data set contains one or more reported determinations of detected but not quantified (DNQ) or not detected (ND). In those cases, the Discharger shall compute the median in place of the arithmetic mean in accordance with the following procedure:

   a. The data set shall be ranked from low to high, reported ND determinations lowest, DNQ determinations next, followed by quantified values (if any). The order of the individual ND or DNQ determinations is unimportant.

   b. The median value of the data set shall be determined. If the data set has an odd number of data points, then the median is the middle value. If the data set has an even number of data points, then the median is the average of the two values around the middle unless one or both of the points are ND or DNQ, in which case the median value shall be the lower of the two data points where DNQ is lower than a value and ND is lower than DNQ. If a sample result, or the arithmetic mean or median of multiple sample results, is below the reporting level, and there is evidence that the priority pollutant is present in the effluent above an effluent limitation and the Discharger conducts a pollutant minimization program (PMP)[10] the Discharger shall not be deemed out of compliance.

O. Non-Priority Pollutants.

The discharge shall be considered to be in compliance with an effluent limitation that is less than or equal to the PQL specified in Attachment H of this Order if the arithmetic mean of all test results for the monitoring period is less than the constituent effluent limitation. Analytical results that are less than the specified PQL shall be assigned a value of zero.

---

9 Minimum level is the concentration at which the entire analytical system must give a recognizable signal and acceptable point. The ML is the concentration in a sample that is equivalent to the concentration of the lowest calibration standard analyzed by a specific analytical procedure, assuming that all the method specified sample weights, volumes, and processing steps have been followed.

10 The goal of the PMP shall be to reduce all potential sources of a priority pollutant(s) through pollutant minimization (control) strategies, including pollution prevention measures as appropriate, to maintain the effluent concentration at or below the water quality-based effluent limitation.

P. Compliance Determination

Compliance determinations shall be based on available analyses for the time interval associated with the effluent limitation. Where only one sample analysis is available in a specified time interval (e. g., monthly or weekly average), that sample shall serve to characterize the discharge for the entire interval. If quarterly sample results show noncompliance with the average monthly limit and that sample result is used for compliance determinations for each month of the quarter, then three separate violations of the average monthly limit shall be deemed to have occurred.

Compliance with a single effluent limitation which applies to a group of chemicals (e.g., PCBs), based on a single sample shall be determined by considering the concentrations of individual members of the group to be zero if the analytical response for the individual chemical falls below the method detection limit (MDL or PQL) for that chemical.

ATTACHMENT A – DEFINITIONS

Arithmetic Mean (μ), also called the average, is the sum of measured values divided by the number of samples. For ambient water concentrations, the arithmetic mean is calculated as follows:

Arithmetic mean = $\mu = \Sigma x / n$ where: Σx is the sum of the measured ambient water concentrations, and
n is the number of samples.

Average Monthly Effluent Limitation (AMEL): the highest allowable average of daily discharges over a calendar month, calculated as the sum of all daily discharges measured during a calendar month divided by the number of daily discharges measured during that month.

Average Weekly Effluent Limitation (AWEL): the highest allowable average of daily discharges over a calendar week (Sunday through Saturday), calculated as the sum of all daily discharges measured during a calendar week divided by the number of daily discharges measured during that week.

Best Management Practices (BMPs) are methods, measures, or practices designed and selected to reduce or eliminate the discharge of pollutants to surface waters from point and nonpoint source discharges including storm water. BMPs include structural and non-structural controls, and operation and maintenance procedures, which can be applied before, during, and/or after pollution producing activities.

Bioaccumulative pollutants are those substances taken up by an organism from its surrounding medium through gill membranes, epithelial tissue, or from food and subsequently concentrated and retained in the body of the organism.

Carcinogenic pollutants are substances that are known to cause cancer in living organisms.

Coefficient of Variation (*CV*) is a measure of the data variability and is calculated as the estimated standard deviation divided by the arithmetic mean of the observed values.

Criteria Continuous Concentration (CCC) equals the highest concentration of a pollutant to which aquatic life can be exposed for an extended period of time (4 days) without deleterious effects.

Criteria Maximum Concentration (CMC) equals the highest concentration of a pollutant to which aquatic life can be exposed for a short period of time without deleterious effects.

Daily Discharge: Daily Discharge is defined as either: (1) the total mass of the constituent discharged over the calendar day (12:00 am through 11:59 pm) or any 24-hour period that reasonably represents a calendar day for purposes of sampling (as specified in the permit),

for a constituent with limitations expressed in units of mass or; (2) the unweighted arithmetic mean measurement of the constituent over the day for a constituent with limitations expressed in other units of measurement (e.g., concentration).

The daily discharge may be determined by the analytical results of a composite sample taken over the course of one day (a calendar day or other 24-hour period defined as a day) or by the arithmetic mean of analytical results from one or more grab samples taken over the course of the day.

Detected, but Not Quantified (DNQ) are those sample results less than the RL, but greater than or equal to the laboratory's MDL.

Effluent Concentration Allowance (ECA) is a value derived from the water quality criterion/objective, dilution credit, and ambient background concentration that is used, in conjunction with the coefficient of variation for the effluent monitoring data, to calculate a long-term average (LTA) discharge concentration. The ECA has the same meaning as waste load allocation (WLA) as used in U.S. EPA guidance (Technical Support Document For Water Quality-based Toxics Control, March 1991, second printing, EPA/505/2-90-001).

Estimated Chemical Concentration is the estimated chemical concentration that results from the confirmed detection of the substance by the analytical method below the ML value.

Existing Discharger means any discharger that is not a new discharger. An existing discharger includes an "increasing discharger" (i.e., an existing facility with treatment systems in place for its current discharge that is or will be expanding, upgrading, or modifying its existing permitted discharge after the effective date of this Policy).

Infeasible means not capable of being accomplished in a successful manner within a reasonable period of time, taking into account economic, environmental, legal, social, and technological factors.

Inland Surface Waters are all surface waters of the State that do not include the ocean, enclosed bays, or estuaries.

Instantaneous Maximum Effluent Limitation: the highest allowable value for any single grab sample or aliquot (i.e., each grab sample or aliquot is independently compared to the instantaneous maximum limitation).

Instantaneous Minimum Effluent Limitation: the lowest allowable value for any single grab sample or aliquot (i.e., each grab sample or aliquot is independently compared to the instantaneous minimum limitation).

Load Allocation (LA) is the portion of receiving water's total maximum daily load that is allocated to one of its nonpoint sources of pollution or to natural background sources.

Maximum Daily Effluent Limitation (MDEL) means the highest allowable daily discharge of a pollutant, over a calendar day (or 24-hour period). For pollutants with limitations expressed in units of mass, the daily discharge is calculated as the total mass of the pollutant discharged over the day. For pollutants with limitations expressed in other units of measurement, the daily discharge is calculated as the arithmetic mean measurement of the pollutant over the day.

MEC: Maximum Effluent Concentration.

Median is the middle measurement in a set of data. The median of a set of data is found by first arranging the measurements in order of magnitude (either increasing or decreasing order). If the number of measurements (n) is odd, then the median = $X_{(n+1)/2}$. If n is even, then the median = $(X_{n/2} + X_{(n/2)+1})/2$ (i.e., the midpoint between the $n/2$ and $n/2+1$).

Method Detection Limit (MDL) is the minimum concentration of a substance that can be measured and reported with 99 percent confidence that the analyte concentration is greater than zero, as defined in 40 CFR 136, Appendix B, revised as of May 14, 1999.

Minimum Level (ML) is the concentration at which the entire analytical system must give a recognizable signal and acceptable calibration point. The ML is the concentration in a sample that is equivalent to the concentration of the lowest calibration standard analyzed by a specific analytical procedure, assuming that all the method specified sample weights, volumes, and processing steps have been followed.

New Discharger includes any building, structure, facility, or installation from which there is, or may be, a discharge of pollutants, the construction of which commenced after the effective date of this Policy.

Not Detected (ND) are those sample results less than the laboratory's MDL.

Pollutant Minimization Program (PMP) means waste minimization and pollution prevention actions that include, but are not limited to, product substitution, waste stream recycling, alternative waste management methods, and education of the public and businesses. The goal of the PMP shall be to reduce all potential sources of a priority pollutant(s) through pollutant minimization (control) strategies, including pollution prevention measures as appropriate, to maintain the effluent concentration at or below the water quality-based effluent limitation. Pollution prevention measures may be particularly appropriate for persistent bioaccumulative priority pollutants where there is evidence that beneficial uses are being impacted. The Regional Water Board may consider cost-effectiveness when establishing the requirements of a PMP. The completion and implementation of a Pollution Prevention Plan, if required pursuant to CWC Section 13263.3(d), shall be considered to fulfill the PMP requirements. The following reporting protocols and definitions are used in determining the need to conduct a Pollution Minimization Program (PMP). Reporting protocols in the Monitoring and Reporting Program, Attachment E, Section X.B.4 describe sample results that are to be reported as Detected but Not Quantified (DNQ) or Not Detected (ND). Definitions for a Minimum Level (ML) and Method Detection Limit (MDL) are provided in Attachment A.

A Reporting Level (RL) is the ML associated with an analytical method selected by the Discharger that is authorized for monitoring effluent limitations under this Order.

Pollution Prevention means any action that causes a net reduction in the use or generation of a hazardous substance or other pollutant that is discharged into water and includes, but is not limited to, input change, operational improvement, production process change, and product reformulation (as defined in Water Code Section 13263.3). Pollution prevention does not include actions that merely shift a pollutant in wastewater from one environmental medium to another environmental medium, unless clear environmental benefits of such an approach are identified to the satisfaction of the SWRCB or RWQCB.

Process Optimization means minor changes to the existing facility and treatment plant operations that optimize the effectiveness of the existing treatment processes.

Public Entity includes the federal government or a state, county, city and county, city, district, public authority, or public agency.

Reporting Level (RL) is the ML corresponding to an approved analytical method for reporting a sample result that is selected either from Appendix 4 of the SIP by the Regional Water Board in accordance with Section 2.4.2 of the SIP or established in accordance with Section 2.4.3 of the SIP. The ML is based on the proper application of method-based analytical procedures for sample preparation and the absence of any matrix interferences. Other factors may be applied to the ML depending on the specific sample preparation steps employed. For example, the treatment typically applied in cases where there are matrix-effects is to dilute the sample or sample aliquot by a factor of ten. In such cases, this additional factor must be applied to the ML in the computation of the RL.

Source of Drinking Water is any water designated as municipal or domestic supply (MUN) in a RWQCB basin plan.

Standard Deviation (σ) is a measure of variability that is calculated as follows:

$$\sigma = (\Sigma[(x - \mu)^2]/(n - 1))^{0.5}$$

where:

x is the observed value;
μ is the arithmetic mean of the observed values; and
n is the number of samples.

Toxicity Reduction Evaluation (TRE) is a study conducted in a step-wise process designed to identify the causative agents of effluent or ambient toxicity, isolate the sources of toxicity, evaluate the effectiveness of toxicity control options, and then confirm the reduction in toxicity. The first steps of the TRE consist of the collection of data relevant to the toxicity, including additional toxicity testing, and an evaluation of facility operations and maintenance practices, and best management practices. A Toxicity Identification Evaluation (TIE) may be required as part of the TRE, if appropriate. (A TIE is a set of procedures to identify the

specific chemical(s) responsible for toxicity. These procedures are performed in three phases (characterization, identification, and confirmation) using aquatic organism toxicity tests.)

Use Attainability Analysis is a structured scientific assessment of the factors affecting the attainment of the use which may include physical, chemical, biological and economic factors as described in 40 CFR 131.10(g) (40 CFR 131.3, revised as of July 1, 1997).

Water Effect Ratio (WER) is an appropriate measure of the toxicity of a material obtained in a site water divided by the same measure of the toxicity of the same material obtained simultaneously in a laboratory dilution water.

12-Month Running Average Effluent Limitation (12-MRAEL): the highest allowable average of monthly discharges over last twelve months, calculated as the sum of all monthly discharges measured during last twelve months divided by the number of monthly discharges measured during that time period.

ATTACHMENT B – VICINITY MAP

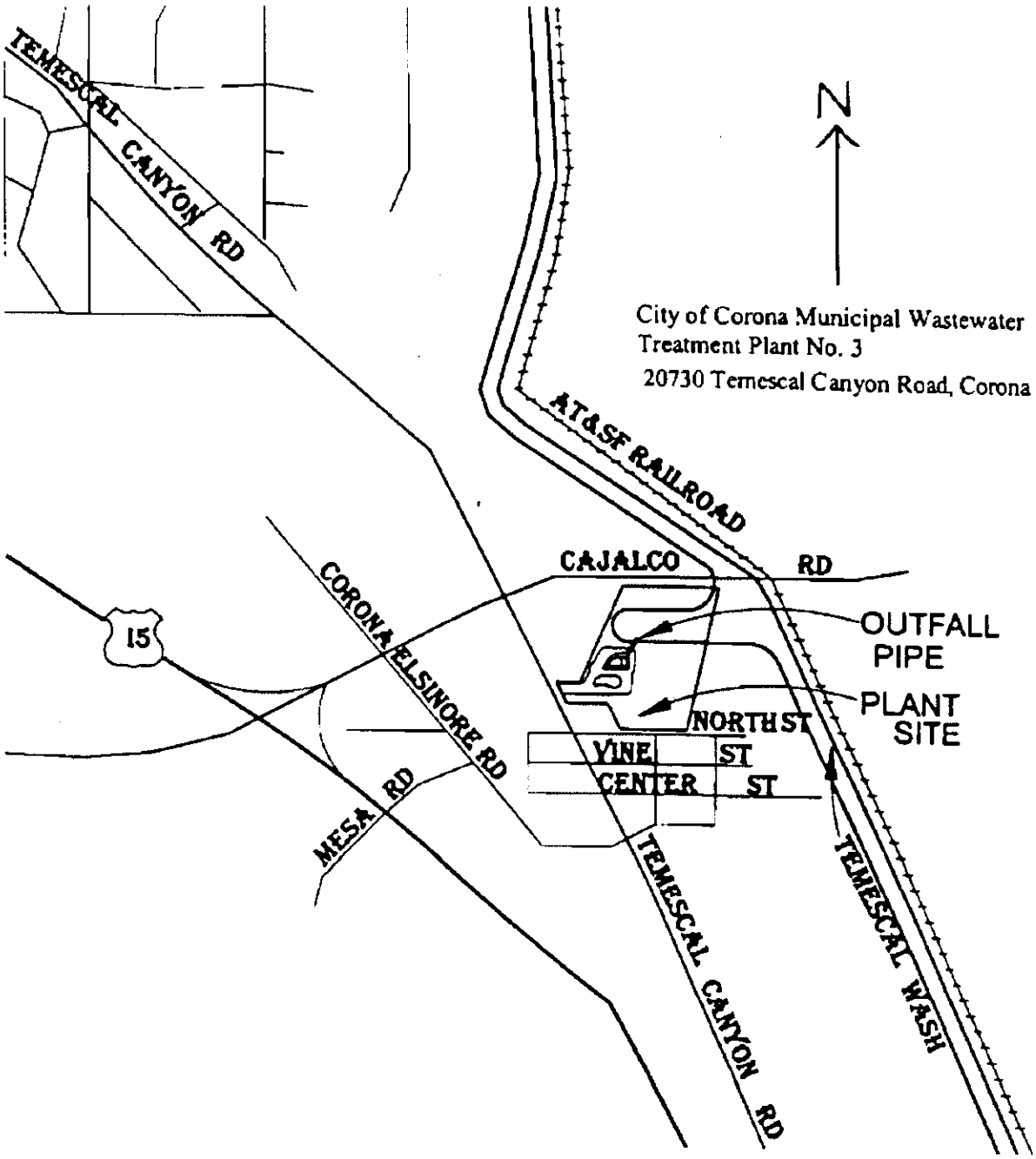

ATTACHMENT C – FLOW SCHEMATIC

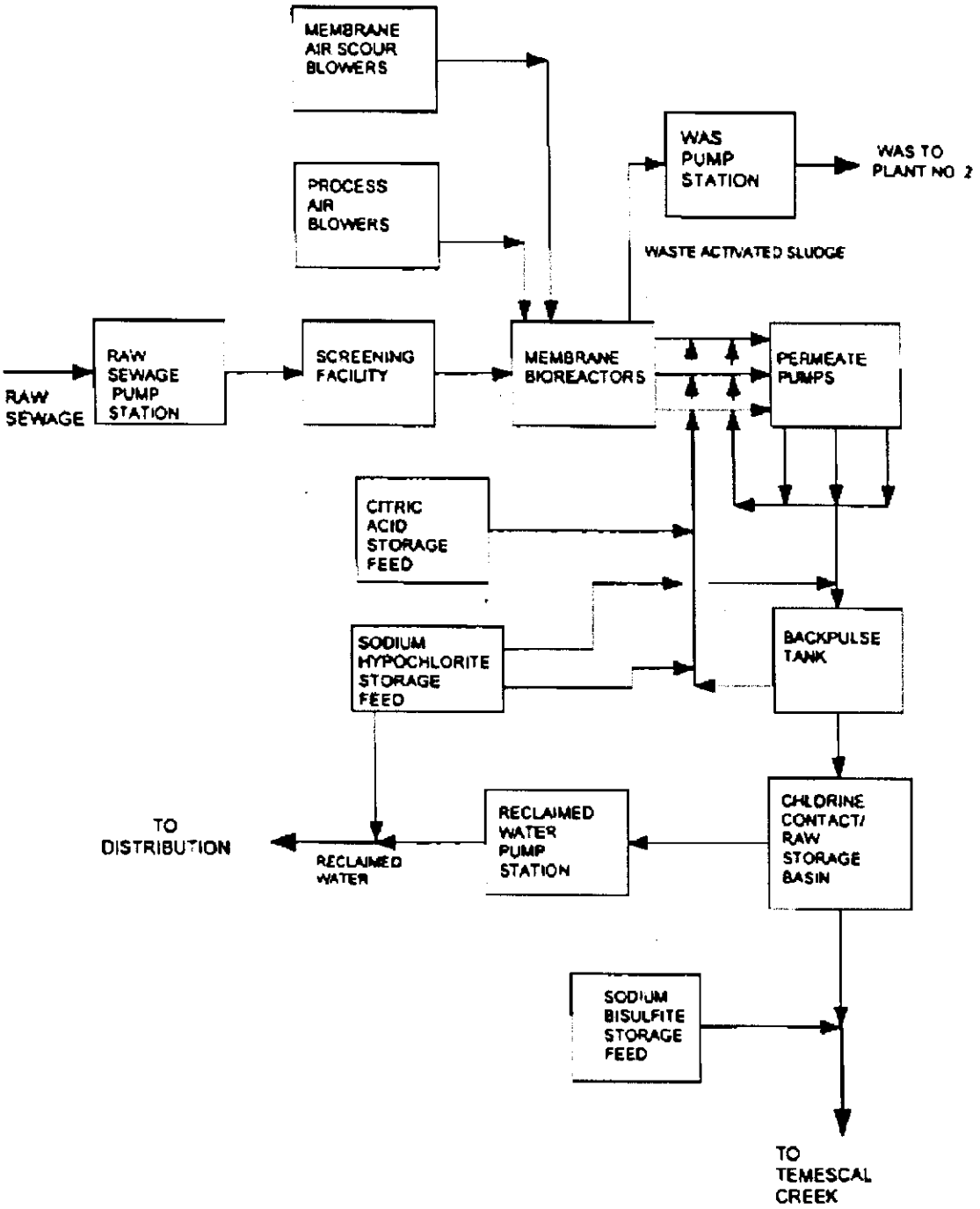

ATTACHMENT D – STANDARD PROVISIONS

I. STANDARD PROVISIONS – PERMIT COMPLIANCE

A. Duty to Comply

1. The Discharger must comply with all of the conditions of this Order. Any noncompliance constitutes a violation of the Clean Water Act (CWA) and the California Water Code (CWC) and is grounds for enforcement action, for permit termination, revocation and reissuance, or modification; or denial of a permit renewal application [*40 CFR §122.41(a)*].

2. The Discharger shall comply with effluent standards or prohibitions established under Section 307(a) of the CWA for toxic pollutants and with standards for sewage sludge use or disposal established under Section 405(d) of the CWA within the time provided in the regulations that establish these standards or prohibitions, even if this Order has not yet been modified to incorporate the requirement [*40 CFR §122.41(a)(1)*].

B. Need to Halt or Reduce Activity Not a Defense

It shall not be a defense for a Discharger in an enforcement action that it would have been necessary to halt or reduce the permitted activity in order to maintain compliance with the conditions of this Order [*40 CFR §122.41(c)*].

C. Duty to Mitigate

The Discharger shall take all reasonable steps to minimize or prevent any discharge or sludge use or disposal in violation of this Order that has a reasonable likelihood of adversely affecting human health or the environment [*40 CFR §122.41(d)*].

D. Proper Operation and Maintenance

The Discharger shall at all times properly operate and maintain all facilities and systems of treatment and control (and related appurtenances) which are installed or used by the Discharger to achieve compliance with the conditions of this Order. Proper operation and maintenance also includes adequate laboratory controls and appropriate quality assurance procedures. This provision requires the operation of backup or auxiliary facilities or similar systems that are installed by a Discharger only when necessary to achieve compliance with the conditions of this Order [*40 CFR §122.41(e)*].

E. Property Rights

1. This Order does not convey any property rights of any sort or any exclusive privileges [*40 CFR §122.41(g)*].

2. The issuance of this Order does not authorize any injury to persons or property or invasion of other private rights, or any infringement of State or local law or regulations [*40 CFR §122.5(c)*].

F. Inspection and Entry

The Discharger shall allow the Regional Water Quality Control Board (RWQCB), State Water Resources Control Board (SWRCB), United States Environmental Protection Agency (USEPA), and/or their authorized representatives (including an authorized contractor acting as their representative), upon the presentation of credentials and other documents, as may be required by law, to [*40 CFR §122.41(i)*] [*CWC 13383(c)*]:

1. Enter upon the Discharger's premises where a regulated facility or activity is located or conducted, or where records are kept under the conditions of this Order [*40 CFR §122.41(i)(1)*];

2. Have access to and copy, at reasonable times, any records that must be kept under the conditions of this Order [*40 CFR §122.41(i)(2)*];

3. Inspect and photograph, at reasonable times, any facilities, equipment (including monitoring and control equipment), practices, or operations regulated or required under this Order [*40 CFR §122.41(i)(3)*];

4. Sample or monitor, at reasonable times, for the purposes of assuring Order compliance or as otherwise authorized by the CWA or the CWC, any substances or parameters at any location [*40 CFR §122.41(i)(4)*].

G. Bypass

1. Definitions

   a. "Bypass" means the intentional diversion of waste streams from any portion of a treatment facility [*40 CFR §122.41(m)(1)(i)*].

   b. "Severe property damage" means substantial physical damage to property, damage to the treatment facilities, which causes them to become inoperable, or substantial and permanent loss of natural resources that can reasonably be expected to occur in the absence of a bypass. Severe property damage does not mean economic loss caused by delays in production [*40 CFR §122.41(m)(1)(ii)*].

2. Bypass not exceeding limitations – The Discharger may allow any bypass to occur which does not cause exceedances of effluent limitations, but only if it is for essential maintenance to assure efficient operation. These bypasses are not subject to the provisions listed in Standard Provisions – Permit Compliance I.G.3, I.G.4, and I.G.5 below [*40 CFR §122.41(m)(2)*].

3. Prohibition of bypass – Bypass is prohibited, and the Regional Water Board may take enforcement action against a Discharger for bypass, unless [*40 CFR §122.41(m)(4)(i)*]:

   a. Bypass was unavoidable to prevent loss of life, personal injury, or severe property damage [*40 CFR §122.41(m)(4)(A)*];

   b. There were no feasible alternatives to the bypass, such as the use of auxiliary treatment facilities, retention of untreated wastes, or maintenance during normal periods of equipment downtime. This condition is not satisfied if adequate back-up equipment should have been installed in the exercise of reasonable engineering judgment to prevent a bypass that occurred during normal periods of equipment downtime or preventive maintenance [*40 CFR §122.41(m)(4)(B)*]; and

   c. The Discharger submitted notice to the Regional Water Board as required under Standard Provisions – Permit Compliance I.G.5 below [*40 CFR §122.41(m)(4)(C)*].

4. The Regional Water Board may approve an anticipated bypass, after considering its adverse effects, if the Regional Water Board determines that it will meet the three conditions listed in Standard Provisions – Permit Compliance I.G.3 above [*40 CFR §122.41(m)(4)(ii)*].

5. Notice

   a. Anticipated bypass. If the Discharger knows in advance of the need for a bypass, it shall submit a notice, if possible at least 10 days before the date of the bypass [*40 CFR §122.41(m)(3)(i)*].

   b. Unanticipated bypass. The Discharger shall submit notice of an unanticipated bypass as required in Standard Provisions - Reporting V.E below (24-hour notice) [*40 CFR Section 122.41(m)(3)(ii)*].

H. Upset

Upset means an exceptional incident in which there is unintentional and temporary noncompliance with technology based permit effluent limitations because of factors beyond the reasonable control of the permittee. An upset does not include noncompliance to the extent caused by operational error, improperly designed treatment facilities, inadequate treatment facilities, lack of preventive maintenance, or careless or improper operation [*40 CFR §122.41(n)(1)*].

1. Effect of an upset. An upset constitutes an affirmative defense to an action brought for noncompliance with such technology based permit effluent limitations if the requirements of Standard Provisions – Permit Compliance I.H.2 below are met. No determination made during administrative review of claims that noncompliance was

caused by upset, and before an action for noncompliance, is final administrative action subject to judicial review [*40 CFR Section 122.41(n)(2)*].

2. Conditions necessary for a demonstration of upset. A Discharger who wishes to establish the affirmative defense of upset shall demonstrate, through properly signed, contemporaneous operating logs or other relevant evidence that [*40 CFR §122.41(n)(3)*]:

   a. An upset occurred and that the Discharger can identify the cause(s) of the upset [*40 CFR §122.41(n)(3)(i)*];

   b. The permitted facility was, at the time, being properly operated [*40 CFR §122.41(n)(3)(i)*];

   c. The Discharger submitted notice of the upset as required in Standard Provisions – Reporting V.E.2.b below (24-hour notice) [*40 CFR Section 122.41(n)(3)(iii)*]; and

   d. The Discharger complied with any remedial measures required under Standard Provisions – Permit Compliance I.C above [*40 CFR §122.41(n)(3)(iv)*].

3. Burden of proof. In any enforcement proceeding, the Discharger seeking to establish the occurrence of an upset has the burden of proof [*40 CFR §122.41(n)(4)*].

II. STANDARD PROVISIONS – PERMIT ACTION

A. General

This Order may be modified, revoked and reissued, or terminated for cause. The filing of a request by the Discharger for modification, revocation and reissuance, or termination, or a notification of planned changes or anticipated noncompliance does not stay any Order condition [*40 CFR §122.41(f)*].

B. Duty to Reapply

If the Discharger wishes to continue an activity regulated by this Order after the expiration date of this Order, the Discharger must apply for and obtain a new permit [*40 CFR §122.41(b)*].

C. Transfers

This Order is not transferable to any person except after notice to the Regional Water Board. The Regional Water Board may require modification or revocation and reissuance of the Order to change the name of the Discharger and incorporate such other requirements as may be necessary under the CWA and the CWC [*40 CFR §122.41(l)(3)*] [*40 CFR §122.61*].

III. STANDARD PROVISIONS – MONITORING

A. Samples and measurements taken for the purpose of monitoring shall be representative of the monitored activity [*40 CFR §122.41(j)(1)*].

B. Monitoring results must be conducted according to test procedures under 40 CFR Part 136 or, in the case of sludge use or disposal, approved under 40 CFR Part 136 unless otherwise specified in 40 CFR Part 503 unless other test procedures have been specified in this Order [*40 CFR §122.41(j)(4)*] [*40 CFR §122.44(i)(1)(iv)*].

IV. STANDARD PROVISIONS – RECORDS

A. Except for records of monitoring information required by this Order related to the Discharger's sewage sludge use and disposal activities, which shall be retained for a period of at least five years (or longer as required by 40 CFR Part 503), the Discharger shall retain records of all monitoring information, including all calibration and maintenance records and all original strip chart recordings for continuous monitoring instrumentation, copies of all reports required by this Order, and records of all data used to complete the application for this Order, for a period of at least three (3) years from the date of the sample, measurement, report or application. This period may be extended by request of the Regional Water Board Executive Officer at any time [*40 CFR §122.41(j)(2)*].

B. Records of monitoring information shall include:

1. The date, exact place, and time of sampling or measurements [*40 CFR §122.41(j)(3)(i)*];
2. The individual(s) who performed the sampling or measurements [*40 CFR §122.41(j)(3)(ii)*];
3. The date(s) analyses were performed [*40 CFR §122.41(j)(3)(iii)*];
4. The individual(s) who performed the analyses [*40 CFR §122.41(j)(3)(iv)*];
5. The analytical techniques or methods used [*40 CFR §122.41(j)(3)(v)*]; and
6. The results of such analyses [*40 CFR §122.41(j)(3)(vi)*].

C. Claims of confidentiality for the following information will be denied [*40 CFR §122.7(b)*]:

1. The name and address of any permit applicant or Discharger [*40 CFR §122.7(b)(1)*]; and

2. Permit applications and attachments, permits and effluent data [*40 CFR §122.7(b)(2)*].

V. STANDARD PROVISIONS – REPORTING

A. Duty to Provide Information

The Discharger shall furnish to the Regional Water Board, SWRCB, or USEPA within a reasonable time, any information which the Regional Water Board, SWRCB, or USEPA may request to determine whether cause exists for modifying, revoking and reissuing, or terminating this Order or to determine compliance with this Order. Upon request, the Discharger shall also furnish to the Regional Water Board, SWRCB, or USEPA copies of records required to be kept by this Order [*40 CFR §122.41(h)*] [*CWC 13267*].

B. Signatory and Certification Requirements

1. All applications, reports, or information submitted to the Regional Water Board, State Water Board, and/or USEPA shall be signed and certified in accordance with Standard Provisions – Reporting V.B.2, V.B.3, V.B.4, and V.B.5 below [*40 CFR Section 122.41(k)*].

2. All permit applications shall be signed by either a principal executive officer or ranking elected official. For purposes of this provision, a principal executive officer of a federal agency includes: (i) the chief executive officer of the agency, or (ii) a senior executive officer having responsibility for the overall operations of a principal geographic unit of the agency (e.g., Regional Administrators of USEPA) [40 CFR Section 122.22(a)(3)].

3. All reports required by this Order and other information requested by the Regional Water Board, State Water Board, or USEPA shall be signed by a person described in Standard Provisions – Reporting V.B.2 above, or by a duly authorized representative of that person. A person is a duly authorized representative only if:

   a. The authorization is made in writing by a person described in Standard Provisions – Reporting V.B.2 above [*40 CFR Section 122.22(b)(1)*];

   b. The authorization specified either an individual or a position having responsibility for the overall operation of the regulated facility or activity such as the position of plant manager, operator of a well or a well field, superintendent, position of equivalent responsibility, or an individual or position having overall responsibility for environmental matters for the company (A duly authorized representative may thus be either a named individual or any individual occupying a named position.) [*40 CFR Section 122.22(b)(2)*]; and

   c. The written authorization is submitted to the Regional Water Board and State Water Board [*40 CFR Section 122.22(b)(3)*].

4. If an authorization under Standard Provisions – Reporting V.B.3 above is no longer accurate because a different individual or position has responsibility for the overall operation of the facility, a new authorization satisfying the requirements of Standard Provisions – Reporting V.B.3 above must be submitted to the Regional Water Board, State Water Board or USEPA prior to or together with any reports, information, or applications, to be signed by an authorized representative [40 CFR Section 122.22(c)].

5. Any person signing a document under Standard Provisions – Reporting V.B.2 or V.B.3 above shall make the following certification:

   "I certify under penalty of law that this document and all attachments were prepared under my direction or supervision in accordance with a system designed to assure that qualified personnel properly gather and evaluate the information submitted. Based on my inquiry of the person or persons who manage the system or those persons directly responsible for gathering the information, the information submitted is, to the best of my knowledge and belief, true, accurate, and complete. I am aware that there are significant penalties for submitting false information, including the possibility of fine and imprisonment for knowing violations" [*40 CFR Section 122.22(d)*].

C. Monitoring Reports

1. Monitoring results shall be reported at the intervals specified in the Monitoring and Reporting Program (Attachment E) in this Order [*40 CFR §122.41(l)(4)*].

2. Monitoring results must be reported on a Discharge Monitoring Report (DMR) form or forms provided or specified by the Regional Water Board or SWRCB for reporting results of monitoring of sludge use or disposal practices [*40 CFR §122.41(l)(4)(i)*].

3. If the Discharger monitors any pollutant more frequently than required by this Order using test procedures approved under 40 CFR Part 136 or, in the case of sludge use or disposal, approved under 40 CFR Part 136 unless otherwise specified in 40 CFR Part 503, or as specified in this Order, the results of this monitoring shall be included in the calculation and reporting of the data submitted in the DMR or sludge reporting form specified by the Regional Water Board [*40 CFR §122.41(l)(4)(ii)*].

4. Calculations for all limitations, which require averaging of measurements, shall utilize an arithmetic mean unless otherwise specified in this Order [*40 CFR §122.41(l)(4)(iii)*].

D. Compliance Schedules

Reports of compliance or noncompliance with, or any progress reports on, interim and final requirements contained in any compliance schedule of this Order, shall be submitted no later than 14 days following each schedule date [*40 CFR §122.41(l)(5)*].

E. Twenty-Four Hour Reporting

1. The Discharger shall report any noncompliance that may endanger health or the environment. Any information shall be provided orally within 24 hours from the time the Discharger becomes aware of the circumstances. A written submission shall also be provided within five (5) days of the time the Discharger becomes aware of the circumstances. The written submission shall contain a description of the noncompliance and its cause; the period of noncompliance, including exact dates and times, and if the noncompliance has not been corrected, the anticipated time it is expected to continue; and steps taken or planned to reduce, eliminate, and prevent reoccurrence of the noncompliance [*40 CFR §122.41(l)(6)(i)*].

2. The following shall be included as information that must be reported within 24 hours under this paragraph [*40 CFR §122.41(l)(6)(ii)*]:

   a. Any unanticipated bypass that exceeds any effluent limitation in this Order [*40 CFR §122.41(l)(6)(ii)(A)*].

   b. Any upset that exceeds any effluent limitation in this Order [*40 CFR §122.41(l)(6)(ii)(B)*].

3. The Regional Water Board may waive the above-required written report under this provision on a case-by-case basis if an oral report has been received within 24 hours [*40 CFR §122.41(l)(6)(iii)*].

F. Planned Changes

The Discharger shall give notice to the Regional Water Board as soon as possible of any planned physical alterations or additions to the permitted facility. Notice is required under this provision only when [*40 CFR §122.41(l)(1)*]:

1. The alteration or addition to a permitted facility may meet one of the criteria for determining whether a facility is a new source in 40 CFR §122.29(b) [*40 CFR §122.41(l)(1)(i)*]; or

2. The alteration or addition could significantly change the nature or increase the quantity of pollutants discharged. This notification applies to pollutants which are subject neither to effluent limitations in this Order nor to notification requirements under 40 CFR Part 122.42(a)(1) (see Additional Provisions—Notification Levels VII.A.1) [*40 CFR §122.41(l)(1)(ii)*].

3. The alteration or addition results in a significant change in the Discharger's sludge use or disposal practices, and such alteration, addition, or change may justify the application of permit conditions that are different from or absent in the existing permit, including notification of additional use or disposal sites not reported during

the permit application process or not reported pursuant to an approved land application plan [*40 CFR §122.41(l)(1)(iii)*].

G. Anticipated Noncompliance

The Discharger shall give advance notice to the Regional Water Board or SWRCB of any planned changes in the permitted facility or activity that may result in noncompliance with General Order requirements [*40 CFR §122.41(l)(2)].*

H. Other Noncompliance

The Discharger shall report all instances of noncompliance not reported under Standard Provisions – Reporting V.C, V.D, and V.E above at the time monitoring reports are submitted. The reports shall contain the information listed in Standard Provision – Reporting V.E above [*40 CFR Section 122.41(l)(7)*].

I. Other Information

When the Discharger becomes aware that it failed to submit any relevant facts in a permit application, or submitted incorrect information in a permit application or in any report to the Regional Water Board, SWRCB, or USEPA, the Discharger shall promptly submit such facts or information [*40 CFR §122.41(l)(8)*].

VI. STANDARD PROVISIONS – ENFORCEMENT

A. The Regional Water Board is authorized to enforce the terms of this permit under several provisions of the CWC, including, but not limited to, sections 13385, 13386, and 13387.

VII. ADDITIONAL PROVISIONS – NOTIFICATION LEVELS

A. Publicly-Owned Treatment Works (POTWs)

All POTWs shall provide adequate notice to the Regional Water Board of the following [*40 CFR Section 122.42(b)*]:

1. Any new introduction of pollutants into the POTW from an indirect discharger that would be subject to Sections 301 or 306 of the CWA if it were directly discharging those pollutants [*40 CFR Section 122.42(b)(1)*]; and

2. Any substantial change in the volume or character of pollutants being introduced into that POTW by a source introducing pollutants into the POTW at the time of adoption of the Order [*40 CFR Section 122.42(b)(2)*].

3. Adequate notice shall include information on the quality and quantity of effluent introduced into the POTW as well as any anticipated impact of the change on the quantity or quality of effluent to be discharged from the POTW [*40 CFR Section 122.42(b)(3)*].

ATTACHMENT E – MONITORING AND REPORTING PROGRAM

Table of Contents

I. General Monitoring Provisions E-2

II. Monitoring Locations E-7

III. Influent Monitoring Requirements E-7

IV. Effluent Monitoring Requirements E-9

V. Whole Effluent Toxicity Testing Requirements E-13

VI. Land Discharge Monitoring Requirements E-16

VII. Reclamation Monitoring Requirements E-16

VIII. Receiving Water Monitoring Requirements..... ..... E-17

IX. Other Monitoring Requirements E-18

X. Reporting Requirements E-19

ATTACHMENT E – MONITORING AND REPORTING PROGRAM (MRP)

The Code of Federal Regulations (CFR) at 40 CFR §122.48 requires that all NPDES permits specify monitoring and reporting requirements. CWC Sections 13267 and 13383 also authorize the Regional Water Quality Control Board (RWQCB) to require technical and monitoring reports. This MRP establishes monitoring and reporting requirements that implement the federal and California regulations.

I. GENERAL MONITORING PROVISIONS

A. General Monitoring Provision

1. All sampling and sample preservation shall be in accordance with the current edition of "*Standard Methods for the Examination of Water and Wastewater*" (American Public Health Association).

    a. All laboratory analyses shall be performed in accordance with test procedures under 40 CFR 136 (revised as of May 14, 1999) "Guidelines Establishing Test Procedures for the Analysis of Pollutants," promulgated by the United States Environmental Protection Agency (EPA), unless otherwise specified in this MRP. For priority pollutants, the test methods must meet the lowest minimum levels (MLs) specified in Attachment "I" of this Order, where no methods/MLs are specified in Attachment "I", then the monitoring is to be conducted in accordance with methods/MLs approved by the Regional Water Board or State Water Board consistent with the State Water Board's Quality Assurance Program. In addition, the Regional Water Board and/or EPA, at their discretion, may specify test methods that are more sensitive than those specified in 40 CFR 136. Unless otherwise specified herein, organic pollutants shall be analyzed using EPA method 8260, as appropriate.

2. Chemical, bacteriological, and bioassay analyses shall be conducted at a laboratory certified for such analyses by the California Department of Health Services or EPA or at laboratories approved by the Regional Water Board's Executive Officer.

3. Whenever the Discharger monitors any pollutant more frequently than is required by this Order, the results of this monitoring shall be included in the calculation and reporting of the data submitted in the discharge monitoring report specified by the Executive Officer.

4. In conformance with federal regulations 40 CFR 122.45(c), analyses to determine compliance with the effluent limitations for metals shall be conducted using the total recoverable method. For Chromium (VI), the dissolved method in conformance with 40 CFR 136 may be used to measure compliance with the Chromium (VI) limitation.

5. For effluent wastewater monitoring:

b. The Discharger shall require its testing laboratory to calibrate the analytical system down to the minimum level (ML)1 specified in Attachment "I" for priority pollutants with effluent limitations in this Order, unless an alternative minimum level is approved by the Regional Water Board's Executive Officer. When there is more than one ML value for a given substance, the Discharger shall use the ML values, and their associated analytical methods, listed in Attachment "I" that are below the calculated effluent limitation. The Discharger may select any one of those cited analytical methods for compliance determination. If no ML value is below the effluent limitation, then the lowest ML value and its associated analytical method, listed in Attachment "I" shall be used. Any internal quality control data associated with the sample must be reported when requested by the Executive Officer. The Regional Water Board will reject the quantified laboratory data if quality control data is unavailable or unacceptable.

a. The Discharger shall report the results of analytical determinations for the presence of chemical constituents in a sample using the following reporting protocols:

1) Sample results greater than or equal to the reported ML shall be reported as measured by the laboratory (i.e., the measured chemical concentration in the sample).

2) Sample results less than the reported ML, but greater than or equal to the laboratory's current Method Detection Limit (MDL)[2], shall be reported as "Detected, but Not Quantified," or "DNQ." The estimated chemical concentration of the sample shall also be reported.

3) Sample results not detected above the laboratory's MDL shall be reported as "not detected" or "ND."

b. The Discharger shall submit to the Regional Water Board reports necessary to determine compliance with effluent limitations in this Order and shall follow the chemical nomenclature and sequential order of priority pollutant constituents shown in Attachment "G" – Priority Pollutant Lists. The Discharger shall report with each sample result:

1) The reporting level achieved by the testing laboratory; and

---

1 Minimum level is the concentration at which the entire analytical system must give a recognizable signal and acceptable point. The ML is the concentration in a sample that is equivalent to the concentration of the lowest calibration standard analyzed by a specific analytical procedure, assuming that all the method specified sample weights, volumes, and processing steps have been followed.

2 MDL is the minimum concentration of a substance that can be measured and reported with 99 percent confidence that the analytical concentration is greater than zero, as defined in 40 CFR 136, Appendix B, revised as of May 14, 1999.

2) The laboratory's current MDL, as determined by the procedure found in 40 CFR 136 (revised as of May 14, 1999).

c. For receiving water monitoring and for those priority pollutants without effluent limitations, the Discharger shall require its testing laboratory to quantify constituent concentrations to the lowest achievable MDL as determined by the procedure found in 40 CFR 136 (revised as of May 14, 1999). In situations where the most stringent applicable receiving water objective (freshwater or human health (consumption of organisms only), as specified for that pollutant in 40 CFR 131.38[3] is below the minimum level value specified in Attachment "G" and the Discharger cannot achieve an MDL value for that pollutant below the ML value, the Discharger shall submit justification why a lower MDL value cannot be achieved. Justification shall be submitted together with monthly monitoring reports.

7. For non-priority pollutants monitoring, all analytical data shall be reported with identification of practical quantitation levels and with method detection limits, as determined by the procedure found in 40 CFR 136 (revised as of May 14, 1999).

8. The Discharger shall have, and implement an acceptable written quality assurance (QA) plan for laboratory analyses. Duplicate chemical analyses must be conducted on a minimum of ten percent (10%) of the samples, or at least one sample per month, whichever is greater. A similar frequency shall be maintained for analyzing spiked samples. When requested by the Regional Water Board or EPA, the Discharger will participate in the NPDES discharge monitoring report QA performance study.

9. For every item of monitoring data where the requirements are not met, the monitoring report shall include a statement discussing the reasons for noncompliance, the actions undertaken or proposed that will bring the discharge into full compliance with requirements at the earliest time, and an estimate of the date when the Discharger will be in compliance. The Discharger shall notify the Regional Water Board by letter when compliance with the time schedule has been achieved.

10. The Discharger shall assure that records of all monitoring information are maintained and accessible for a period of at least five years (this retention period supercedes the retention period specified in Section IV.A. of Attachment D) from the date of the sample, report, or application. This period of retention shall be extended during the course of any unresolved litigation regarding this discharge or by the request of the Regional Water Board at any time. Records of monitoring information shall include:

    a. The information listed in Attachment D- IV Standard Provisions – Records, subparagraph B. of this Order;

[3] See Federal Register/ Vol. 65, No. 97 / Thursday, May 18, 2000 / Rules and Regulations.

b. The laboratory which performed the analyses;

c. The date(s) analyses were performed;

d. The individual(s) who performed the analyses;

e. The modification(s) to analytical techniques or methods used;

f. All sampling and analytical results, including

   1) Units of measurement used;
   2) Minimum reporting level for the analysis (minimum level, practical quantitation level (PQL));
   3) Results less than the reporting level but above the method detection limit (MDL);
   4) Data qualifiers and a description of the qualifiers;
   5) Quality control test results (and a written copy of the laboratory quality assurance plan);
   6) Dilution factors, if used; and
   7) Sample matrix type.

g. All monitoring equipment calibration and maintenance records;
h. All original strip charts from continuous monitoring devices;
i. All data used to complete the application for this Order; and,
j. Copies of all reports required by this Order.
k. Electronic data and information generated by the Supervisory Control And Data Acquisition (SCADA) System.\

11. The flow measurement system shall be calibrated at least once per year or more frequently, to ensure continued accuracy.

12. All monitoring instruments and devices used by the Discharger to fulfill the prescribed monitoring program shall be properly maintained and calibrated as necessary to ensure their continued accuracy. In the event that continuous monitoring equipment is out of service for greater than a 24-hour period, the Discharger shall obtain a representative grab sample each day the equipment is out of service. The Discharger shall correct the cause(s) of failure of the continuous monitoring equipment as soon as practicable. In its monitoring report, the Discharger shall specify the period(s) during which the equipment was out of service and if the problem has not been corrected, shall identify the steps which the Discharger is taking or proposes to take to bring the equipment back into service and the schedule for these actions.

13. Monitoring and reporting shall be in accordance with the following:

    a. Samples and measurements taken for the purpose of monitoring shall be representative of the monitored activity.

b. The monitoring and reporting of influent, effluent, and sludge shall be done more frequently as necessary to maintain compliance with this Order and or as specified in this Order.

c. Whenever the Discharger monitors any pollutant more frequently than is required by this Order, the results of this monitoring shall be included in the calculation and reporting of the data submitted in the discharge monitoring report specified by the Executive Officer.

d. A "grab" sample is defined as any individual sample collected in less than 15 minutes.

e. A composite sample is defined as a combination of no fewer than eight individual grab samples obtained over the specified sampling period. The volume of each individual grab sample shall be proportional to the discharge flow rate at the time of sampling. The compositing period shall equal the specific sampling period, or 24 hours, if no period is specified.

f. 24-hour composite samples shall be collected continuously during a 24-hour operation of the facility.

g. Daily samples shall be collected on each day of the week.

h. Monthly samples shall be collected on any representative day of each month.

i. Quarterly samples shall be collected by any representative day of January, April, July, and October.

j. Semi-annual samples shall be collected in January and July.

k. Annual samples shall be collected in accordance with the following schedule:

Table 1. Annual Sampling Schedule

Year	Annual Samples
2007	June
2008	September
2009	December
2010	March
2011	June
2012	September

B. Laboratories Analysis

Laboratories analyzing monitoring samples shall be certified by the Department of Health Services, in accordance with the provision of Water Code Section 13176, and must include quality assurance/quality control data with their reports.

C. Minimum Level (ML) Requirements

When there is more than one ML value for a given substance listed in Appendix 4 of the SIP (see Attachment I – ML Table[4]), the Discharger may select any one of those cited analytical methods for compliance determination when the associated ML is below the calculated effluent limitation.

If no ML value is below the effluent limitation, then the Regional Water Board shall select as the reporting level (RL), the lowest ML value and its associated analytical method listed in Appendix 4 for inclusion in the permit.

II. MONITORING LOCATIONS

1. Sampling stations shall be established for the points of inflow to the treatment plant. The sampling station(s) shall be located upstream of any in-plant return flows and where representative sample(s) of the influent of the treatment plant can be obtained.

2. The Discharger shall monitor the influent to the facility at Monitoring Location M-INF as follows. If more than one analytical test method is listed for a given parameter, the Discharger must select from the listed methods and corresponding Minimum Level:

Table 2. Monitoring Station Locations

Discharge Point Name	Monitoring Location Name	Monitoring Location Description	Latitude	Longitude
INF	M-INF	Influent sampling before Headworks	33° 49' 10" N	117° 30' 22" W
001	M-001	Effluent to Temescal Creek	33° 49' 10" N	117° 30' 22" W
002	REC-001	Effluent at the chlorine contact basin effluent	33° 49' 10" N	117° 30' 22" W

III. INFLUENT MONITORING REQUIREMENTS

A. Monitoring Location at M-INF

1. Sampling stations shall be established and located upstream of any in-plant return flows and where a representative sample of the influent to the treatment facility can be obtained. The following shall constitute the influent monitoring program:

[4] The ML table includes all ML values and their associated analytical methods.

Table 3. Influent Monitoring

Parameter	Units	Sample Type	Minimum Sampling Frequency	Required Analytical Test Method
Flow	mgd	Recorder/ Totalizer	Continuous	--
Specific Conductance	µmhos/cm	Recorder	"	See Sections I.A.2., I.A.3. & I.B., above of this MRP
pH	pH units	Recorder	Continuous	"
BOD_5	mg/L	24-hr Composite	Weekly	"
TOC	"	"	"	"
Suspended Solids	"	"	Weekly	"
Ammonia-Nitrogen	"	Grab	Monthly	"
Total Inorganic Nitrogen	"	24-hr Composite	"	"
Total Dissolved Solids	"	24-hr Composite	Monthly	"
Boron	"	"	Quarterly	"
Chloride	"	"	"	"
Sodium	"	"	"	"
Fluoride	"	"	"	"
Barium	"	"	"	"
Sulfate	"	"	"	"
Total Hardness	mg/L	"	"	"
Arsenic	µg/L	"	"	"
Benzene	"	"	"	"
Bromodichloromethane	"	"	"	"
Chloroform	"	"	"	"
Dibromochloromethane	"	"	"	"
Hexachlorocyclohexane	"	"	"	"
Iron	"	"	"	"
Manganese	"	"	"	"
Phenol	"	"	"	"
Selenium	"	"	"	"
Cadmium	"	"	"	"
Chromium, VI or Total chromium	µg/L	24-hr Composite	Quarterly	See Sections I.A.2., I.A.3. & I.B., above of this MRP
Copper	"	"	"	"
Cyanide (Free)	µg/L	Grab	Quarterly	"
Lead	"	24-hr Composite	"	"
Mercury	"	"	"	"
Nickel	"	"	"	"
Silver	"	"	"	"
Zinc	µg/L	24-hr Composite	Quarterly	"

Table 3. Influent Monitoring

Parameter	Units	Sample Type	Minimum Sampling Frequency	Required Analytical Test Method
Volatile organic portion of EPA Priority Pollutants[5] (See Attachment "G")	µg/L	Grab	Annually	"
Remaining EPA Priority Pollutants[6] (See Attachment "G")	µg/L	24-hr Composite	Annually	"

IV. EFFLUENT MONITORING REQUIREMENTS

The Discharger shall monitor tertiary treated effluent for Discharge Points at corresponding Monitoring Location as follows. If more than one analytical test method is listed for a given parameter, the Discharger must select from the listed methods and corresponding Minimum Level.

A. Tertiary Effluent Monitoring Location M-001

1. The Discharger shall monitor tertiary effluent at monitoring location M-001 as follows:

Table 4. Effluent Monitoring

Parameter	Units	Sample Type	Minimum Sampling Frequency	Required Analytical Test Method and Reporting Level as noted herein
Flow	mgd	Recorder/ Totalizer	Continuous	---
Specific Conductance	µmhos/cm	Recorder	"	See Sections I.A.2., I.A.3. & I.B., above of this MRP
pH	pH units	"	"	"
Total Chlorine Residual	mg/L	Recorder	Continuous	"

5 EPA priority pollutants are those remaining volatile organic pollutants listed in Attachment "G" which are not specifically listed in this monitoring program table.

6 Remaining EPA priority pollutants are those pollutants listed in Attachment "G" which are not volatile organics and pollutants not specifically listed in this monitoring program table.

Table 4. Effluent Monitoring

Parameter	Units	Sample Type	Minimum Sampling Frequency	Required Analytical Test Method and Reporting Level as noted herein
Turbidity	NTU[7]	Recorder/ Turbidimeter	Continuous[8]	"
Coliform Organisms	MPN/100mL[9]	Grab	Daily	"
CT Value	Mg-min/L[10]	Calculation	Daily[11]	---
TOC	mg/l	Composite	Daily	See Sections I.A.2., I.A.3. & I.B., above of this MRP
BOD	mg/l	Composite	Weekly	"
Suspended Solids	"	Composite	Weekly	"
Ammonia-Nitrogen	"	Grab	Weekly	"
Temperature	°C	Grab	Weekly	"
Toxicity Monitoring for discharges to Temescal Creek only	----	See Section V, Below	Monthly See Section V, Below	"
Bicarbonate	mg/l	Composite	Monthly	"
Boron	"	"	"	"
Calcium	"	"	"	"
Carbonate	"	"	"	"
Chloride	"	"	"	"
Fluoride	"	"	"	"
Magnesium	"	"	"	"
Nitrate	"	"	"	"
Sodium	"	"	"	"
Sulfate	"	"	"	"
Total Dissolved Solids	"	"	"	"
Total Hardness	"	"	"	"
Total Inorganic Nitrogen	"	"	"	"
Iron	µg/l	Composite	Monthly (See IV.A.3., below)	"
Manganese	"	"	"	"
Total Recoverable Cadmium	"	"	"	"
Total Recoverable Chromium (VI)	"	"	"	See Sections I.A.2., I.A.3. & I.B., above of this MRP and RL 5 µg/L, Total Cr, RL 2 µg/L

7 NTU = Nephelometric Turbidity Units

8 Turbidity analysis shall be continuous, performed by a continuous recording turbidimeter. Compliance with the daily average operating filter effluent turbidity shall be determined by averaging the levels of recorded turbidity taken at a minimum of four-hour intervals over a 24-hour period. The results of the daily average turbidity determinations shall be reported monthly.

9 MPN/100mL = Most Probable Number per 100 milliliters

10 mg-min/L – milligram-minutes per liter

11 Compliance with CT requirements shall be determined daily based on low chlorine residual and/or peak flow.

Table 4. Effluent Monitoring

Parameter	Units	Sample Type	Minimum Sampling Frequency	Required Analytical Test Method and Reporting Level as noted herein
Total Recoverable Copper	µg/l	Composite	Monthly	See Sections I.A.2., I.A.3. & I.B., above of this MRP and RL 5 µg/L
Total Recoverable Lead	"	"	"	See Sections I.A.2., I.A.3. & I.B., above of this MRP and RL 5 µg/L
Total Recoverable Mercury	"	"	"	See Sections I.A.2., I.A.3. & I.B., above of this MRP
Total Recoverable Nickel	"	"	Monthly (See IV.A.3., below)	"
Total Recoverable Selenium	"	"	"	See Sections I.A.2., I.A.3. & I.B., above of this MRP and RL 2 µg/L
Total Recoverable Silver	"	"	"	See Sections I.A.2., I.A.3. & I.B., above of this MRP
Total Recoverable Zinc	"	"	Monthly (See IV.A.3., below)	"
Hexachlorocyclohexane -gamma	µg/l	Composite	Monthly	"
Cyanide (Free)	"	Grab	Quarterly	See Sections I.A.2., I.A.3. & I.B., above of this MRP
Benzene	µg/l	Composite	"	"
Phenol	"	"	"	"
Total Trihalomethanes[12]	"	"	"	"
Arsenic	"	"	Quarterly (See IV.A.3., below)	See Sections I.A.2., I.A.3. & I.B., above of this MRP
Barium	"	"	"	"
Cobalt	"	"	"	"
2,3,7,8-TCDD	µg/l	Composite	Quarterly	"
Acrylonitrile	µg/l	Composite	Quarterly	"
Carbon Tetrachloride	"	"	"	"
1,1-Dichloroethylene	"	"	"	"
Pentachlorophenol	"	"	"	"
2,4,6-Trichlorophenol	"	"	"	"
Benzidine	"	"	"	"
Benzo (a) anthracene	"	"	"	"
Benzo (a) pyrene	"	"	"	"
Benzo (b) fluoranthene	"	"	"	"
Benzo (k) fluorantene	"	"	"	"
Bis (2-Chloroethyl) ether	"	"	"	"

12 Total Trihalomethanes shall mean the sum of Bromoform, Chloroform, Dibromochloromethane, and Bromodichloromethane.

Table 4. Effluent Monitoring

Parameter	Units	Sample Type	Minimum Sampling Frequency	Required Analytical Test Method and Reporting Level as noted herein
Bis (2-ethylhexyl) phthalate	"	"	"	"
Chrysene	"	"	"	"
Dibenzo (a,h) anthracene	"	"	"	"
3,3-Dichlorobenzidine	"	"	"	"
2,4-Dinitrotoluene	"	"	"	"
1,2-Diphenylhydrazine	"	"	"	"
Hexachlorobenzene	"	"	"	"
Hexachloroethane	"	"	"	"
Indeno (1,2,3-cd) pyrene	"	"	"	"
N-Nitrosodimethylamine	µg/l	Composite	Quarterly (see C.4., below)	"
N-Nitrosodi-N-propylamine	"	"	"	"
Aldrin	"	"	"	"
BHC Alpha	"	"	"	"
BHC Beta	"	"	"	"
Chlordane	"	"	"	"
4,4-DDT	"	"	"	"
4,4-DDE	"	"	"	"
4,4-DDD	"	"	"	"
Dieldrin	"	"	"	"
Endrin	"	"	"	"
Heptachlor	"	"	"	"
Heptachlor Epoxide	"	"	"	"
PCB 1016	"	"	"	"
PCB 1221	"	"	"	"
PCB 1232	"	"	"	"
PCB 1242	"	"	"	"
PCB 1248	"	"	"	"
PCB 1254	µg/l	Composite	Quarterly	"
PCB 1260	µg/l	Composite	Quarterly	"
Toxaphene	"	"	"	"
2,3,7,8-TetraCDD	ρg/l (parts-per-quadrillion)	Composite	Semi-annual	"
1,2,3,7,8-PentaCDD	"	"	"	"
1,2,3,4,7,8-HexaCDD	"	"	"	"
1,2,3,6,7,8-HexaCDD	"	"	"	"
1,2,3,7,8,9-HexaCDD	"	"	"	"
1,2,3,4,6,7,8-HeptaCDD	"	"	"	"
OctaCDD	"	"	"	"
2,3,7,8-TetraCDF	"	"	"	"
1,2,3,7,8-PentaCDF	"	"	"	"
2,3,4,7,8-PentaCDF	"	"	"	"

Table 4. Effluent Monitoring

Parameter	Units	Sample Type	Minimum Sampling Frequency	Required Analytical Test Method and Reporting Level as noted herein
1,2,3,4,7,8-HexaCDF	"	"	"	"
1,2,3,6,7,8-HexaCDF	"	"	"	"
1,2,3,7,8,9-HexaCDF	"	"	"	"
2,3,4,6,7,8-HexaCDF	"	"	"	"
1,2,3,4,6,7,8-HeptaCDF	"	"	"	"
1,2,3,4,7,8,9-HeptaCDF	"	"	"	"
OctaCDF	pg/l (parts-per-quadrillion)	Composite	Semi-annual	"
Remaining volatile organic portion of EPA Priority Pollutants (See Attachment "G")	µg/l	Grab	Annually (See IV. A.4., below)	See Sections I.A.2., I.A.3. & I.B., above of this MRP
Remaining EPA Priority Pollutants (See Attachment "G")	µg/l	Composite	Annually (See IV. A.4., below)	"

3. The monitoring frequency for those priority pollutants that are detected during the required quarterly monitoring at a concentration greater than the concentration specified for that pollutant[13] in Attachment J shall be accelerated to monthly. To return to the monitoring frequency specified, the Discharger shall request and receive approval from the Regional Water Board's Executive Officer or designee.

4. The monitoring frequency for those priority pollutants that are detected during the required annual monitoring at a concentration greater than the concentration specified for that pollutant[14] in Attachment J shall be accelerated to quarterly for one year. To return to the monitoring frequency specified, the Discharger shall request and receive approval from the Regional Water Board's Executive Officer or designee.

V. WHOLE EFFLUENT TOXICITY TESTING REQUIREMENTS

A. Toxicity Monitoring Requirements at M-001

1. The Discharger shall conduct critical life stage chronic toxicity testing in accordance with Method 1002.0 - Survival and Reproduction test for water flea, *Ceriodaphnia dubia* as specified in "Short-term Methods for Estimating the Chronic Toxicity of Effluents and Receiving Waters to Freshwater Organisms", Fourth Edition, Environmental Monitoring Systems Laboratory, U.S. Environmental Protection Agency 2002, Cincinnati, Ohio (October 2002, EPA-821-R-02-013).

13 For those priority pollutants without specified criteria values, accelerated monitoring is not required.

2. The Discharger shall establish procedures to ensure that the toxicity testing laboratory notifies the Discharger of the results of toxicity testing within twenty-four hours of completing such tests.

3. A minimum of one monthly chronic toxicity test shall be conducted on grab samples.

4. The Discharger shall increase the frequency of chronic toxicity testing to every two weeks whenever any test result exceeds 1.0 TUc. The first test under the accelerated schedule shall be conducted within two weeks of receiving notice of the test which exceeds 1.0 TUc, and every two weeks thereafter. The Discharger may resume the regular test schedule when two consecutive chronic toxicity tests result in 1.0 TUc, or when the results of the Initial Investigation Reduction Evaluation conducted by the Discharger have adequately addressed the identified toxicity problem.

5. The presence of chronic toxicity shall be estimated as specified in Short-Term Methods for Estimating the Chronic Toxicity of Effluents and Receiving Waters to Freshwater Organisms. Fourth Edition. EPA-821-R-02-013.

6. Results for both survival and reproduction endpoints shall be reported in TUc, where TUc = 100/NOEC or 100/ICp or ECp (p is the percent effluent). The no observed effect concentration (NOEC) is the highest concentration of toxicant to which organisms are exposed in a chronic test, that causes no observable adverse effect on the tests organisms (e.g., the highest concentration of toxicant to which the values for the observed responses are not statistically significant different from the controls). The inhibition concentration (IC) is a point estimate of the toxicant concentration that causes a given percent reduction in a non-quantal biological measurement (e.g., reproduction or growth) calculated from a continuous model (the EPA Interpolation Method). The effective concentration (EC) is a point estimate of the toxicant concentration that would cause a given percent reduction in quantal biological measurement (e.g., larval development, survival) calculated from a continuous model (e.g., probit).

7. Additional Testing Requirements

    a. A series of at least five dilutions and a control will be tested. The series shall be within 60% to 100% effluent concentration.

    b. If organisms are not cultured in-house, concurrent testing with reference toxicants shall be conducted. Where organisms are cultured in-house, monthly reference toxicant testing is sufficient. Reference toxicants shall also be conducted using the same test conditions as the effluent toxicity test (e.g., same test duration, etc).

c. If either of the reference toxicant test or the effluent tests do not meet all test acceptability criteria as specified in the manual[14], then the Discharger must re-sample and re-test within 14 days or as soon as the Discharger receives notification of failed tests.

d. Control and dilution water should be receiving water or lab water, as appropriate, as described in the manual. If the dilution water used is different from the culture water, a second control, using culture water shall also be used.

8. Quality Assurance/Control:

a. A quality assurance/quality control (QA/QC) program shall be instituted to verify the results of the effluent toxicity monitoring program. The QA/QC program shall include but shall not be limited to the following: (1) Selection of an independent testing laboratory; (2) Approval by the Regional Board's Executive Officer or Executive Officer's designee of the independent testing laboratory; (3) Once during the year, the Discharger shall split samples with the independent laboratory for conducting chronic toxicity testing; (4) Results from the independent laboratory shall be submitted to the Regional Board and the Discharger for evaluation; (5) The Discharger shall review the test acceptability criteria in accordance with the EPA test protocols, EPA/600/4-91/002.

b. Results from the independent laboratory of the annual QA/QC split samples are to be used for Quality Assurance/Quality Control (QA/QC) purposes only and not for purposes of determining compliance with other requirements of this Order.

9. The use of alternative methods for measuring chronic toxicity may be considered by the Executive Officer on a case–by-case basis. The use of a different test species, in lieu of conducting the required test species may be considered/approved by the Executive Officer on a case-by case basis upon submittal of the documentation supporting Discharger's determination that a different species is more sensitive and appropriate.

10. Reporting: Results of all toxicity testing conducted within the month following the reporting period shall be submitted monthly in accordance with "Short-term Methods for Estimating the Chronic Toxicity of Effluents and Receiving Waters to Freshwater Organisms", third edition, Environmental Monitoring Systems Laboratory, U.S. Environmental Protection Agency 1994, Cincinnati, Ohio (July 1994, EPA/600/4-91/002). The report shall include a determination of the median value of all chronic toxicity testing results conducted during the two previous months.

---

14 Refers to USEPA Manual "Short-Term Methods for Estimating the Chronic Toxicity of Effluents and Receiving Waters to Freshwater Organisms. Third Edition. EPA/600/4-91/002."

11. Whenever an Initial Investigation Reduction Evaluation is conducted, the results of the evaluation shall be submitted upon completion. In addition, monthly status reports shall be submitted as part of the Discharger's monitoring report for the previous month.

VI. LAND DISCHARGE MONITORING REQUIREMENTS – Not Applicable

VII. RECLAMATION MONITORING REQUIREMENTS

A. Monitoring Location REC-001 for DP-002

The Discharger shall monitor recycled wastewater at REC-001

Table 5. Reclamation Monitoring at REC-001

Parameter	Units	Sample Type	Minimum Sampling & Testing Frequency	Required Analytical Test Method
Flow	mgd	Recorder/Totalizer	Continuous	--
pH	Standard units	Recorder/Totalizer	Continuous	See Section I.A.1.a., above, of this MRP
CT[15]	mg/L-min	Recorder	Continuous	"
Turbidity	NTU	Recorder	Continuous	"
BOD_5	mg/L	Composite	Weekly	"
Total Suspended Solids	mg/L	Composite	Weekly	"
Coliform Organisms	MPN per 100 mL	Grab	Daily	"
Total Inorganic Nitrogen	mg/L	Composite	Monthly	"
TDS	mg/L	Composite	Monthly	See Section I.A.1.a., above, of this MRP

15 *CT is the product of total chlorine residual and modal contact time measured at the same point.*

B. Monitoring Users

Whenever recycled water is supplied to a user, the volume of recycled water, the user of recycled water, the locations of those sites including the names of the groundwater management zone underlying the recycled water use sites, type of use (e.g. irrigation, industrial, etc) and the dates at which water is supplied shall be recorded on a permanent log. A summary report of water use by groundwater management zones shall be submitted annually to Regional Water Board and CDHS.

VIII. RECEIVING WATER MONITORING REQUIREMENTS – SURFACE WATER AND GROUNDWATER

A. Surface Water

1. The following receiving water stations shall be monitored for the indicated constituents:

Table 6. Receiving Water Monitoring

Station A:	Temescal Creek at suitable location within 500 feet upstream of the point of discharge.			
Station B:	Temescal Creek within 500 feet downstream of the point of discharge.			
Station	Constituent	Unit	Type of Sample	Minimum Frequency of Sampling & Analysis
A and B	Dissolved Oxygen	mg/l	Grab	Weekly
A and B	Temperature	°C	"	"
A and B	pH	pH units	"	"
A check for the presence of any color changes, foam, deposition of material, or odor in the receiving water from the discharge shall be made weekly at station B.				

2. At station A, all the priority pollutants listed in Attachment "G" shall be monitored quarterly and reported by the last day of the month following the monitoring period.

3. Unless otherwise directed by the Regional Board Executive Officer, the Discharger shall implement the approved plan for the annual sampling and testing of mercury levels in fish flesh samples collected from the Santa Ana River. The frequency of monitoring and submission of reports shall be as stipulated in the approved plan.

B. Groundwater Monitoring: Not applicable

C. Regional Monitoring for Fish Flesh Testing:

Unless otherwise directed by the Regional Water Board Executive Officer, the Discharger shall implement the approved plan for the annual sampling and testing of mercury levels in fish flesh samples collected from the Santa Ana River. The frequency of monitoring and submission of reports shall be as stipulated in the approved plan.

IX. OTHER MONITORING REQUIREMENTS

A. Biosolids Monitoring

1. Biosolids monitoring shall be conducted as follows:

Table 7. Biosolids Monitoring Requirements

Biosolids Monitoring	Units	Type of Sample	Minimum Frequency of Sampling & Testing
Priority Pollutants	mg/kg	Grab	Semi-annually
Moisture Content (% solid)	mg/kg	Grab	Quarterly

2. The Discharger shall maintain a permanent log of solids hauled away from the treatment facilities for use/disposal elsewhere, including the date hauled, the volume or weight (in dry tons), type (screening, grit, raw sludge, biosolids), application (agricultural, composting, etc), and destination. This information shall be reported quarterly.

B. Water Supply Monitoring

1. In August of each year, a sample of each source of the water supplied to the sewered area shall be obtained and analyzed for total dissolved solids concentration expressed in "mg/l".

2. Monthly reports shall be submitted stating the amount (in percentage or acre-feet) supplied to the sewered area from each source of water and the resulting flow-weighted water supply quality for total dissolved solids.

D. Pretreatment Monitoring and Reporting: Not Applicable

E. Salt Offset Program Monitoring and Reporting

Every month, the Discharger shall submit the total salt removal for the month that demonstrates that 1) the offset is occurring, and 2) the amount of removed TDS is in compliance with offset requirement. The Discharger shall report monthly a running balance of salt discharges compared to salt removal. If offset is not occurring during the monthly monitoring period, the monthly report shall so state and identify when the offset will be achieved.

X. REPORTING REQUIREMENTS

A. General Monitoring and Reporting Requirements

1. The Discharger shall comply with all Standard Provisions (Attachment D) related to monitoring, reporting, and recordkeeping.

2. All analytical data shall be reported with method detection limit[16] (MDLs) and with identification of either reporting level, practical quantitation levels (PQLs[17]) or limits of quantitation (LOQs).

3. Laboratory data for effluent samples must quantify each constituent down to the PQLs specified in Attachment "H" for non-priority pollutants and down to the MLs specified in Attachment "I" for priority pollutants. Any internal quality control data associated with the sample must be reported when requested by the Executive Officer. The Regional Water Board will reject the quantified laboratory data if quality control data are unavailable or unacceptable.

4. Discharge monitoring data shall be submitted in a format acceptable by the Regional Water Board. Specific reporting format may include preprinted forms and/or electronic media. The results of all monitoring required by this Order shall be reported to the Regional Water Board, and shall be submitted in such a format as to allow direct comparison with the limitations and requirements of this Order.

5. The Discharger shall tabulate the monitoring data to clearly illustrate compliance and/or noncompliance with the requirements of the Order.

---

16 The standardized test procedure to be used to determine the method detection limit (MDL) is given at Appendix B, "Definition and Procedure for the Determination of the Method Detection Limit" of 40 CFR 136.

17 PQL is the lowest concentration of a substance that can be determined within ± 20 percent of the true concentration by 75 percent of the analytical laboratories tested in a performance evaluation study. Alternatively, if performance data are not available, the PQL is the method detection limit (MDL) x 5 for carcinogens and MDL x 10 for noncarcinogens.

6. The Discharger shall submit to the Regional Water Board reports necessary to determine compliance with effluent limitations in this Order and shall follow the chemical nomenclature and sequential order of priority pollutant constituents shown in Attachment "G" – Priority Pollutant Lists. The Discharger shall report with each sample result:

   a) The reporting level achieved by the testing laboratory; and
   b) The laboratory's current MDL, as determined by the procedure found in 40 CFR 136 (revised as of May 14, 1999).
   c) For receiving water monitoring and for those priority pollutants without effluent limitations, the Discharger shall require its testing laboratory to quantify constituent concentrations to the lowest achievable MDL as determined by the procedure found in 40 CFR 136 (revised as of May 14, 1999). In situations where the most stringent applicable receiving water objective (freshwater or human health (consumption of organisms only), as specified for that pollutant in 40 CFR 131.38[18] is below the minimum level value specified in Attachment "I" and the Discharger cannot achieve an MDL value for that pollutant below the ML value, the Discharger shall submit justification why a lower MDL value cannot be achieved. Justification shall be submitted together with monthly monitoring reports.

7. For non-priority pollutants monitoring, all analytical data shall be reported with identification of practical quantitation levels and with method detection limits, as determined by the procedure found in 40 CFR 136 (revised as of May 14, 1999).

8. For every item of monitoring data where the requirements are not met, the monitoring report shall include a statement discussing the reasons for noncompliance, and of the actions undertaken or proposed which will bring the discharge into full compliance with requirements at the earliest time, and an estimate of the date when the Discharger will be in compliance. The Discharger shall notify the Regional Water Board by letter when compliance with the time schedule has been achieved.

9. The monthly reports for June and December shall include a roster of plant personnel, including job titles, duties, and level of State certification for each individual.

10. At any time during the term of this Order when electronic submittal of monitoring reports has become the norm, the State or Regional Water Board may notify the Discharger to discontinue submittal of hard copies of reports. When such notification is given, the Discharger shall stop submitting hard copies of required monitoring reports.

---

18 See Federal Register/ Vol. 65, No. 97 / Thursday, May 18, 2000 / Rules and Regulations.

11. The Discharger shall report monitoring results for specific parameters in accordance with the following table:

Table 8. Reporting Requirements

Parameter	Measurement
Flow	Daily total flow
pH	Daily high and daily low
Total Chlorine Residual	Daily Maximum
Electrical Conductivity	Daily High
Turbidity	Daily maximum

12. The Discharger shall file a written report with the Regional Board within ninety (90) days after the average dry-weather waste flow for any month equals or exceeds 75 percent of the design capacity of the waste treatment and/or disposal facilities. The Discharger's senior administrative officer shall sign a letter that which transmits that report and certifies that the policy making body is adequately informed about it. The report shall include:

    a. Average daily flow for the month, the date on which the instantaneous peak flow occurred, the rate of that peak flow, and the total flow for the day.

    b. The Discharger's best estimate of when the average daily dry-weather flow rate will equal or exceed the design capacity of the treatment facilities.

    c. The Discharger's intended schedule for studies, design, and other steps needed to provide additional capacity for the waste treatment and/or disposal facilities before the waste flow rate equals the capacity of present units.

B. Self Monitoring Reports (SMRs)

1. At any time during the term of this permit, the State or Regional Water Board may notify the Discharger to electronically submit Self-Monitoring Reports (SMRs) using the State Water Board's California Integrated Water Quality System (CIWQS) Program Web site (http://www.waterboards.ca.gov/ciwqs/index.html). Until such notification is given, the Discharger shall submit hard copy SMRs in accordance with the requirements described in subsection B.5 below. The CIWQS Web site will provide additional directions for SMR submittal in the event there will be service interruption for electronic submittal.

2. The Discharger shall report in the SMR the results for all monitoring specified in this MRP under sections III through IX. Additionally, the Discharger shall report in the SMR the results of any special studies, acute and chronic toxicity testing, TRE/TIE, PMP, and Pollution Prevention Plan required by Special Provisions – VI.C. list of this Order. The Discharger shall submit monthly, quarterly, and annual SMRs including the results of all required monitoring using USEPA-approved test methods or other test methods specified in this Order. If the Discharger monitors any pollutant more frequently than required by this Order, the results of this monitoring shall be included in the calculations and reporting of the data submitted in the SMR.

3. Monitoring periods and reporting for all required monitoring shall be completed according to the following schedule:

Table 9. Monitoring and Reporting Schedule

Sampling Frequency	Monitoring Period Begins On	Monitoring Period	SMR Due Date
Continuous	April 20, 2007	All	Submit with monthly SMR
Daily	April 20, 2007	(Midnight through 11:59 PM) or any 24-hour period that reasonably represents a calendar day for purposes of sampling.	Submit with monthly SMR
Weekly	April 22, 2007	Sunday through Saturday	Submit with monthly SMR
Monthly	May 1, 2007	1st day of calendar month through last day of calendar month	30 days from the end of the monitoring period, submit as monthly SMR
Quarterly	May 1, 2007	January 1 through March 31 April 1 through June 30 July 1 through September 30 October 1 through December 31	30 days from the end of the monitoring period, submit with monthly SMR
Semiannually	May 1, 2007	January 1 through June 30 July 1 through December 31	30 days from the end of the monitoring period, submit with monthly SMR
Annually	May 1, 2007	January 1 through December 31	30 days from the end of the monitoring period, submit with monthly SMR

4. Reporting Protocols. The Discharger shall report with each sample result the applicable Reporting Level (RL) and the current Method Detection Limit (MDL), as determined by the procedure in 40 CFR Part 136.

   The Discharger shall report the results of analytical determinations for the presence of chemical constituents in a sample using the following reporting protocols:

   a. Sample results greater than or equal to the RL shall be reported as measured by the laboratory (i.e., the measured chemical concentration in the sample).

b. Sample results less than the RL, but greater than or equal to the laboratory's MDL, shall be reported as "Detected, but Not Quantified," or DNQ. The estimated chemical concentration[19] of the sample shall also be reported.

   For the purposes of data collection, the laboratory shall write the estimated chemical concentration next to DNQ as well as the words "Estimated Concentration" (may be shortened to "Est. Conc."). The laboratory may, if such information is available, include numerical estimates of the data quality for the reported result. Numerical estimates of data quality may be percent accuracy (± a percentage of the reported value), numerical ranges (low to high), or any other means considered appropriate by the laboratory.

c. Sample results less than the laboratory's MDL shall be reported as "Not Detected," or ND.

d. Dischargers are to instruct laboratories to establish calibration standards so that the ML value (or its equivalent if there is differential treatment of samples relative to calibration standards) is the lowest calibration standard. At no time is the Discharger to use analytical data derived from *extrapolation* beyond the lowest point of the calibration curve.

5. Multiple Sample Data: When determining compliance with an AMEL for priority pollutants and more than one sample result is available in a month, the Discharger shall compute the arithmetic mean unless the data set contains one or more reported determinations of "Detected, but Not Quantified" (DNQ) or "Not Detected" (ND). In those cases, the Discharger shall compute the median in place of the arithmetic mean in accordance with the following procedure:

   a. The data set shall be ranked from low to high, ranking the reported ND determinations lowest, DNQ determinations next, followed by quantified values (if any). The order of the individual ND or DNQ determinations is unimportant.

   b. The median value of the data set shall be determined. If the data set has an odd number of data points, then the median is the middle value. If the data set has an even number of data points, then the median is the average of the two values around the middle unless one or both of the points are ND or DNQ, in which case the median value shall be the lower of the two data points where DNQ is lower than a value and ND is lower than DNQ.

6. The Discharger shall submit hard copy SMRs (with an original signature) when required by subsection B.1 above in accordance with the following requirements:

   a. The Discharger shall arrange all reported data in a tabular format. The data shall be summarized to clearly illustrate whether the facility is operating in compliance with interim and/or final effluent limitations.

---

19 See definition in Attachment "A"

b. The Discharger shall attach a cover letter to the SMR. The information contained in the cover letter shall clearly identify violations of the WDRs; discuss corrective actions taken or planned; and the proposed time schedule for corrective actions. Identified violations must include a description of the requirement that was violated and a description of the violation.

c. SMRs must be submitted to the Regional Water Board, signed and certified as required by the Standard Provisions (Attachment D), to the address listed below:

7. The Discharger shall attach a cover letter to the SMR. The information contained in the cover letter shall clearly identify violations of the WDRs; discuss corrective actions taken or planned; and the proposed time schedule for corrective actions. Identified violations must include a description of the requirement that was violated and a description of the violation.

8. By April 1 of each year, the Discharger shall submit an annual report to the Regional Water Board. The annual report shall include the following:

   a. Tabular and graphical summaries of the monitoring data obtained during the previous year;

   b. A discussion of the compliance record and the corrective actions taken or planned, which may be needed to bring the discharge into full compliance with the waste discharge requirements;

   c. A summary of the quality assurance (QA) activities for the previous year; and

   d. For priority pollutant constituents that do not have effluent limitations but are required to be monitored, the Discharger shall evaluate the monitoring data obtained during the previous year and determine whether detected constituents are at levels that would warrant reopening the permit to include effluent limitations for such constituent(s). To conduct this evaluation, the concentration of detected constituents shall be compared to the most stringent applicable receiving water objectives (freshwater or human health (consumption of organisms only) as specified for that pollutant[20] in 40 CFR 131.38[21]). The Discharger shall include a discussion of the corrective actions taken or planned to address values above receiving water objectives.

---

20 For those priority pollutants without specified criteria values, accelerated monitoring is not required.

21 See Federal Register/ Vol. 65, No. 97 / Thursday, May 18, 2000 / Rules and Regulations

C. Discharge Monitoring Reports (DMRs)

1. As described in Section X.B.1 above, at any time during the term of this permit, the State or Regional Water Board may notify the Discharger to electronically submit SMRs that will satisfy federal requirements for submittal of Discharge Monitoring Reports (DMRs). Until such notification is given, the Discharger shall submit DMRs in accordance with the requirements described below.

2. DMRs must be signed and certified as required by the standard provisions (Attachment D). The Discharger shall submit the original DMR and one copy of the DMR to the address listed below:

   State Water Resources Control Board
   Discharge Monitoring Report Processing Center
   Post Office Box 671
   Sacramento, CA 95812

3. All discharge-monitoring results must be reported on the official USEPA pre-printed DMR forms (EPA Form 3320-1). Forms that are self-generated or modified cannot be accepted.

   Regional Administrator
   U. S. Environmental Protection Agency
   Region 9 – Attention WTR – 7
   75 Hawthorne Street
   San Francisco, CA 94105

D. Other Reports – Not Applicable

ATTACHMENT F – FACT SHEET

TABLE OF CONTENTS

ATTACHMENT F – FACT SHEET 3
I. Permit Information 3
II. Facility Description 4
A. Description of Wastewater and Biosolids Treatment or Controls 4
B. Discharge Points and Receiving Waters 5
C. Summary of Existing Requirements and Self-Monitoring Report (SMR) Data 5
D. Compliance Summary 9
E. Planned Changes 9
III. Applicable Plans, Policies, and Regulations 9
A. Legal Authorities 9
B. California Environmental Quality Act (CEQA) 10
C. State and Federal Regulations, Policies, and Plans 10
D. Impaired Water Bodies on CWA 303(d) List - Not Applicable 12
E. Other Plans, Polices and Regulations - Not Applicable 12
IV. Rationale For Effluent Limitations and Discharge Specifications 13
A. Discharge Prohibitions 13
B. Technology-Based Effluent Limitations 13
1. Scope and Authority 13
2. Applicable Technology-Based Effluent Limitations 14
C. Water Quality-Based Effluent Limitations (WQBELs) 14
1. Scope and Authority 14
2. Applicable Beneficial Uses and Water Quality Criteria and Objectives 14
3. Determining the Need for WQBELs 17
4. WQBEL Calculations 18
5. Whole Effluent Toxicity (WET) 20
D. Best Professional Judgment -Based Effluent Limitations 20
E. Final Effluent Limitations 20
1. Satisfaction of Anti-Backsliding Requirements 20
2. Satisfaction of Antidegradation Policy 20
3. Stringency of Requirements for Individual Pollutants 21
Table 11. Summary of Effluent Limitations 21
F. Interim Effluent Limitations 22
G. Land Discharge Specifications – Not Applicable 22
H. Reclamation Specifications 22
V. Rationale for Receiving Water Limitations and SpecificaTions 23
A. Surface Water 23
B. Groundwater 23
VI. Rationale for Monitoring and Reporting Requirements 23
A. Influent Monitoring 23
B. Effluent Monitoring 23
C. Whole Effluent Toxicity Testing Requirements 24
D. Receiving Water Monitoring 25
1. Surface Water 25
2. Temescal Management Zone – Not Applicable 25
E. Other Monitoring Requirements 25

VII. Rationale for Provisions 25
A. Standard Provisions 25
B. Special Provisions 26
VIII. Public Participation 27
A. Notification of Interested Parties 28
B. Written Comments 28
C. Public Hearing 28
D. Waste Discharge Requirements Petitions 29
E. Information and Copying 29
F. Register of Interested Persons 29
G. Additional Information 29

ATTACHMENT F – FACT SHEET

As described in Section II of this Order, this Fact Sheet includes the legal requirements and technical rationale that serve as the basis for the requirements of this Order.

This Order has been prepared under a standardized format to accommodate a broad range of discharge requirements for Dischargers in California. Only those sections or subsections of this Order that are specifically identified as "not applicable" have been determined not to apply to this Discharger. Sections or subsections of this Order not specifically identified as "not applicable" are fully applicable to this Discharger.

I. PERMIT INFORMATION

The following table summarizes administrative information related to the facility.

Table 1. Facility Information

WDID	**8 332476001**
Discharger	**City of Corona, Department of Water & Power**
Name of Facility	**Municipal Wastewater Treatment Plant No. 3**
Facility Address	**3997 Temescal Canyon Road**
	Corona, CA 92883
	Riverside County
Facility Contact, Title and Phone	**Rudy Fandel, Regulatory Compliance Manager, (951) 736-2476**
Authorized Person to Sign and Submit Reports	**Rudy Fandel, Regulatory Compliance Manager , (951) 736-2476**
Mailing Address	**400 South Vicentia Avenue, Corona, CA 92882**
Billing Address	**Same**
Type of Facility	**POTW**
Major or Minor Facility	**Major**
Threat to Water Quality	**1**
Complexity	**A**
Pretreatment Program	**N**
Reclamation Requirements	**Y**
Facility Permitted Flow	**1 mgd**
Facility Design Flow	**1 mgd**
Watershed	**Santa Ana River**
Receiving Water	**Reach 1 of Temescal Creek, Santa Ana River Reach 3**
Receiving Water Type	**Freshwater – Creek and River**

A. The City of Corona, Department of Water and Power (hereinafter Discharger) is the owner and operator of the Wastewater Treatment Plant No. 3 (hereinafter Facility), a publicly owned wastewater treatment plant with tertiary treatment processes.

For the purposes of this Order, references to the "discharger" or "permittee" in applicable federal and State laws, regulations, plans, or policy are held to be equivalent to references to the Discharger herein.

B. The Facility intermittently discharges up to 1 million gallons per day (mgd) of tertiary treated wastewater to Temescal Creek, Reach 1, a tributary to Reach 3 of the Santa Ana River. Discharges are currently regulated by Order No. 01-79 and National Pollutant Discharge Elimination System (NPDES) Permit No. CA8000395. Order No. 01-79 was adopted on September 26, 2001 and expired on September 1, 2006. The terms and conditions of the current Order have been automatically continued and remain in effect until new Waste Discharge Requirements and NPDES permit are adopted pursuant to this Order.

C. The Discharger filed a report of waste discharge and submitted an application for renewal of its Waste Discharge Requirements (WDRs) and National Pollutant Discharge Elimination System (NPDES) permit on March 7, 2006. A site visit was conducted on May 11, 2006, to observe operations and collect additional data to develop permit limitations and conditions.

II. FACILITY DESCRIPTION

A. Description of Wastewater and Biosolids Treatment or Controls

The Discharger operates the Facility, a publicly owned treatment works. The Facility receives domestic wastewater from a service area that encompasses approximately 4,650 acres of primarily residential areas, west and east of the I-15, including the Cunningham Baristic Project and Westerly Plateau area, Eagle Glen area, Butterfield Station area, Bedford Wash area and El Cerrito area. The Facility consists of headwork structure, rotating drum screen, activated sludge aeration basins with nitrification and denitrification zones, microfiltration membrane system, chlorination, and dechlorination. Biosolids are pumped to the City of Corona's Treatment Plant No. 2.

All tertiary treated effluent from the plant is recycled for landscape irrigation. The recycled water is pumped to the Eagle Glen Golf Course, the sports fields and spyglass Park. Additional users, including other parks, school sites and landscape maintenance districts will receive recycled water in the near future as well. However, during periods of high rainfall and/or low demand for recycled-water, the chlorinated tertiary treated wastewater is dechlorinated with sodium bisulfite and discharged into Temescal Creek, Reach 1. The treatment plant could be expanded to accommodate a total of 3 mgd design capacity. Attachment B provides a map of the area around the Facility. Attachment C provides a flow schematic of the Facility.

B. Discharge Points and Receiving Waters

1. Discharge Points

The Discharger is authorized to discharge from the following discharge points as set forth below:

Table 2. Summary of Discharge Points

Discharge Point	Effluent Description	Discharge Point Latitude	Discharge Point Longitude	Disposal Site
001	Chlorinated tertiary treated effluent	33 ° 49' 24" N	117 ° 30' 22" W	Temescal Creek, Reach 1
002	Chlorinated tertiary treated effluent	33 ° 49' 20" N	117 ° 30' 25" W	Various recycled water use sites

2. Receiving Waters:

Surface Waters: During periods of high rainfall and/or low demand for recycled water, the chlorinated tertiary treated wastewater is dechlorinated with sodium bisulfite prior to discharge to Reach 1 of Temescal Creek.

Groundwater: When demand for recycled water is high, all tertiary treated wastewater is recycled for landscape irrigation at Eagle Glen Golf Course and three sports fields. Recycled water is used for irrigation in areas overlying the Temescal Groundwater Management Zone.

C. Summary of Existing Requirements and Self-Monitoring Report (SMR) Data

1. Effluent limitations/Discharge Specifications contained in the existing Order 01-79 for discharges from DP 001 and DP 002 and representative monitoring data from the term of the previous Order are as follows:

Table 3. Historic Effluent Limitations and Monitoring Data

Parameter (units)	Effluent Limitation				Monitoring Data (From January 1, 2003 to December 31,2005)				
					Average Weekly		Average Monthly		Maximum Daily
	Average Weekly	Average Monthly	Average Daily	Maximum Daily	Max.	Avg.	Max.	Avg.	
Flow Rate (mgd)	---	1	---	---	---	---	0.917	0.415	1.224
BOD (mg/L)	30	20	---	---	20	2	10.9	2.3	---

Table 3. Historic Effluent Limitations and Monitoring Data

Parameter (units)	Effluent Limitation				Monitoring Data (From January 1, 2003 to December 31,2005)				
					Average Weekly		Average Monthly		Maximum Daily
	Average Weekly	Average Monthly	Average Daily	Maximum Daily	Max.	Avg.	Max.	Avg.	
Suspended Solids (mg/L)	30	20	---	---	5	3	4.5	2	---
Ammonia-Nitrogen (mg/L)	---	4.5	---	---	---	---	15.1	1.7	---
Chloride (mg/L)	---	140	---	---	---	---	228	193	---
Sodium (mg/L)	---	110	---	---	---	---	193	178	---
Sulfate (mg/L)	---	150	---	---	---	---	179	157	---
Total Hardness (mg/L)	---	350	---	---	---	---	806	702	---
TDS (mg/L)	---	700	---	---	---	---	806	702	---
TIN (mg/L)	---	10	---	---	---	---	6	4	---
pH minimum	---	---	---	6.5	---	---	---	---	6.6
pH maximum	---	---		8.5	---	---	---	---	8.0
Turbidity (NTU)	---	---	0.2	---			0.140	0.07	---
Coliform (MPN/100 ml)	2.2	---	---	240	<2.0		---	---	900

Table 4. Historic Monitoring Data

Monitoring Data (From January 1, 2003 to December 31,2005)				
Constituent	Units	AVERAGE	MINIMUM	MAXIMUM
Antimony	µg/L	4.5	<0.18	26.4
Bicarbonate	mg/L	215	150	310
Beryllium	µg/L	<0.037	<0.037	0
Boron	mg/L	0.56	0.127	1.1
Calcium	mg/L	71	33	120
Carbonate	mg/L	<2.0	<2.0	0
Chloride	mg/L	206	106	340
Fluoride	mg/L	0.36	<0.10	0.71
Magnesium	mg/L	20	8	30
Sodium	mg/L	183	120	287
Sulfate	mg/L	164	64	227
TDS	mg/L	736	572	1000
Total Hardness	mg/L	254	156	384
Iron	µg/L	109	<3.2	641
Manganese	µg/L	17	<0.44	158
Cadmium	µg/L	5.78	<0.015	56.9
Chromium	µg/L	6.05	<0.26	17

Table 4. Historic Monitoring Data

Copper	µg/L	14.5	<0.49	63
Lead	µg/L	11.3	<0.13	156
Mercury	µg/L	0.30	<0.063	0.4
Nickel	µg/L	3.9	<0.15	11
Selenium	µg/L	4.04	<0.36	14
Silver	µg/L	13.8	<0.005	71
Thallium	µg/L	0.37	<0.075	1.1
Zinc	µg/L	300.1	<3.1	6967
Cyanide	µg/L	<0.0020	<0.0020	0
Arsenic	µg/L	2.0	<0.49	8
Barium	µg/L	30	<0.14	78
Cobalt	µg/L	0.09	<0.10	0.39

Table 4. Historic Monitoring Data

MONITORING DATA (FROM JANUARY 1, 2003 TO DECEMBER 31,2005)			
CONSTITUENT	**Average** µg/L	**Minimum** µg/L	**Maximum** µg/L
PHENOL	<0.28	<0.28	<0.28
BENZENE	<0.245	<0.245	<0.245
HEXACHLOROCYCLOHEXANE	<0.0050	<0.0050	<0.0050
ACRYLONITRILE	<2.959	<2.959	<2.959
CARBON TETRACHLORIDE	<0.287	<0.287	<0.287
1,1-DICHLOROETHYLENE	<0.316	<0.316	<0.316
PENTACHLOROPHENOL	<1.6	<1.6	<1.6
2,4,6-TRICHLOROPHENOL	<0.20	<0.20	<0.20
BROMOFORM	0.28	<0.124	3.3
CHLOROFORM	98.2	1.1	191
DIBROMOCHLOROMETHANE	9.0	1.4	17.3
BROMODICHLOROMETHANE	33.3	0.5	68.2
BENZIDINE	<4.8	<4.8	<4.8
BENZO (A) ANTHRACENE	<0.076	<0.076	<0.076
BENZO (A) PYRENE	<0.28	<0.28	<0.28
BENZO (B) FLUORANTENE	<0.10	<0.10	<0.10
BENZO (K) FLUORANTENE	<0.11	<0.11	<0.11
BIS(2-CHLOROETHYL) ETHER	<0.17	<0.17	<0.17
BIS(2-ETHYLHEXYL) PHTHALATE	16.15	1.59	53
CHRYSENE	<0.14	<0.14	<0.14
DIBENZO (A,H) ANTHRACENE	<0.17	<0.17	<0.17
3,3-DICHLOROBENZIDINE	<1.9	<1.9	<1.9
2,4-DINITROTOLUENE	<0.46	<0.46	<0.46
1,2-DIPHENYLHYDRAZINE	<0.17	<0.17	<0.17
HEXACHLOROBENZENE	<0.26	<0.26	<0.26
HEXACHLOROETHANE	<1.0	<1.0	<1.0

Table 4. Historic Monitoring Data

MONITORING DATA (FROM JANUARY 1, 2003 TO DECEMBER 31,2005)			
CONSTITUENT	**Average** µg/L	**Minimum** µg/L	**Maximum** µg/L
INDENO (1,2,3-CD) PYRENE	<0.38	<0.38	<0.38
N-NITROSODIMETHYLAMINE	0.090	0.002	0.99
N-NITROSODI-N-PROPYLAMINE	<0.36	<0.36	<0.36
ALDRIN	<0.0030	<0.0030	<0.0030
BHC ALPHA	<0.0010	<0.0010	<0.0010
BHC BETA	<0.0030	<0.0030	<0.0030
CHLORDANE	<0.030	<0.030	<0.030
4,4-DDT	<0.0030	<0.0030	<0.0030
4,4-DDE	<0.0030	<0.0030	<0.0030
4,4-DDD	<0.0020	<0.0020	<0.0020
DIELDRIN	<0.0010	<0.0010	<0.0010
ENDRIN	<0.0040	<0.0040	<0.0040
HEPTACHLOR	<0.0030	<0.0030	<0.0030
HEPTACHLOR EPOXIDE	<0.0040	<0.0040	<0.0040
PCB 1016	<0.20	<0.20	<0.20
PCB 1221	<0.10	<0.10	<0.10
PCB 1232	<0.15	<0.15	<0.15
PCB 1242	<0.15	<0.15	<0.15
PCB 1248	<0.25	<0.25	<0.25
PCB 1254	<0.25	<0.25	<0.25
PCB 1260	<0.40	<0.40	<0.40
TOXAPHENE	<0.070	<0.070	<0.070
2,3,7,8-TETRACDD (PG/)[1]	<1.30	<1.30	<1.30
1,2,3,7,8-PENTACDD (PG/)[1]	<1.20	<1.20	<1.20
1,2,3,4,7,8-HEXACDD (PG/)[1]	<0.97	<0.97	<0.97
1,2,3,6,7,8-HEXACDD (PG/)[1]	<0.85	<0.85	<0.85
1,2,3,7,8,9-HEXACDD (PG/)[1]	<0.81	<0.81	<0.81
1,2,3,4,6,7,8-HEPTACDD (PG/)[1]	0.7	<1.70	2
OCTACDD (PG/)[1]	3.7	<2.80	11
2,3,7,8-TETRACDF (PG/)[1]	<0.87	<0.87	<0.87
1,2,3,7,8-PENTACDF (PG/)[1]	<1.10	<1.10	<1.10
2,3,4,7,8-PENTACDF (PG/)[1]	<1.10	<1.10	<1.10
1,2,3,4,7,8-HEXACDF (PG/)[1]	<0.83	<0.83	<0.83
1,2,3,6,7,8-HEXACDF (PG/)[1]	<0.88	<0.88	<0.88
1,2,3,7,8,9-HEXACDF (PG/)[1]	<1.10	<1.10	<1.10
2,3,4,6,7,8-HEXACDF (PG/)[1]	<0.78	<0.78	<0.78
1,2,3,4,6,7,8-HEPTACDF (PG/)[1]	0.6	<1.90	1.8
1,2,3,4,7,8,9-HEPTACDF (PG/)[1]	<1.50	<1.50	<1.50
OCTACDF (PG/)[1]	2.3	<1.40	6.8

D. Compliance Summary

Based on a review of effluent monitoring data submitted by the Discharger for the period 2003 through 2005, the wastewater discharged from the wastewater treatment facility was in violation of the following effluent limitations:

1. May 2003:
   One violation of coliform limit.

2. August 2005
   One violation of ammonia-nitrogen.

3. September 2005
   One violation of ammonia-nitrogen.

4. November 2005
   One violation of ammonia-nitrogen.

5. During January 2006, the Discharger exceeded the toxicity trigger of 1.0 TU_c for chronic toxicity testing of *Ceriodaphnia dubia*. The Discharger accelerated the frequency of chronic toxicity testing to every two weeks and these subsequent samples were in compliance.

6. On May 12, 2006, the Discharger exceeded the effluent coliform limit of 240 MPN with a value of 500 MPN. The Discharger believed that the presence of an insect in the sample resulted in this violation. Discharger is now paying closer attention to ensure that foreign matter is not introduced into the sample medium.

E. Planned Changes

At this time, there are no planned changes reported by the Discharger.

III. APPLICABLE PLANS, POLICIES, AND REGULATIONS

The requirements contained in the proposed Order are based on the requirements and authorities described in this section.

A. Legal Authorities

This Order is issued pursuant to section 402 of the federal Clean Water Act (CWA) and implementing regulations adopted by the U.S. Environmental Protection Agency (USEPA) and chapter 5.5, division 7 of the California Water Code (commencing with section 13370). It shall serve as a NPDES permit for point source discharges from this Facility to surface waters. This Order also serves as Waste Discharge Requirements (WDRs) pursuant to article 4, chapter 4, division 7 of the Water Code (commencing with section 13260).

B. California Environmental Quality Act (CEQA)

Under Water Code section 13389, this action to adopt an NPDES permit is exempt from the provisions of CEQA, Public Resources Code sections 21000 et seq. (*County of Los Angeles v. California State Water Resources Control Board* (2006) 143 Cal.App.4th 985, mod. (Nov. 6, 2006, B184034) 50 Cal.Rptr.3d 619, 632-636.). This action also involves the re-issuance of waste discharge requirements for an existing facility that discharges treated wastewater to land and as such, is exempt from the provisions of California Environmental Quality Act (commencing with Section 21100) in that the activity is exempt pursuant to Title 14 of the California Code of Regulations Section 15301.

C. State and Federal Regulations, Policies, and Plans

1. **Water Quality Control Plans.** The Regional Water Board adopted a Water Quality Control Plan for the Santa Ana Basin (hereinafter Basin Plan) that became effective on January 24, 1995. The Basin Plan designates beneficial uses, establishes water quality objectives, and contains implementation programs and policies to achieve those objectives for all waters addressed through the plan. In addition, State Water Resources Control Board (State Water Board) Resolution No. 88-63 (Sources of Drinking Water Policy) requires that, with certain exceptions, the Regional Water Board assign the municipal and domestic water supply use to water bodies. Based on the exception criteria specified in Resolution No. 88-63, the Regional Board excepted Temescal Creek, Reach 1 and Reach 5 of the Santa Ana River downstream of Orange Avenue (Redlands) and downstream reaches, including Reach 3, from the municipal and domestic supply beneficial use.

   On January 22, 2004, the Regional Water Board adopted Resolution No. R8-2004-0001, amending the Basin Plan to incorporate revised boundaries for groundwater subbasins, now termed "management zones", new nitrate-nitrogen and TDS objectives for the new management zones, and new nitrogen and TDS management strategies applicable to both surface and ground waters. The State Water Resources Control Board and Office of Administrative Law (OAL) approved the N/TDS Amendment on September 30, 2004 and December 23, 2004, respectively. The surface water standards components of the N/TDS Amendment are awaiting EPA approval. Effluent limitations for TDS and TIN in this Order are based on N and TDS wasteload allocations included in the N/TDS Amendment and are at least as stringent as the limits in the prior Order.

   As previously discussed, the Facility discharges into Reach 1 of Temescal Creek. The discharge and recycled water use area overlies the Temescal groundwater management zone. The beneficial uses of these affected waterbodies are as follows:

Table 5. Basin Plan Beneficial Uses

Discharge Point	Receiving Water Name	Beneficial Use(s)
001	Temescal Creek, Reach 1 (intermittent discharge)	Present or Potential: Agricultural supply, groundwater recharge, water contact recreation, non-contact water recreation, warm freshwater habitat, wildlife habitat, and rare, threatened, and endangered species. Excepted from Municipal and Domestic Supply
001	Santa Ana River, Reach 3	Present or Potential: Agricultural supply (AGR), Ground water recharge (GWR), Water contact recreation (REC-1), Non-contact water recreation (REC-2), Warm freshwater habitat (WARM); Wildlife habitat (WILD), and Rare, threatened or endangered species (RARE). Excepted from Municipal and Domestic Supply
002	Temescal Management Zone	Present or Potential: Municipal and domestic water supply (MUN), agricultural supply (AGR), industrial service supply (IND), industrial process supply (PROC).

Requirements of this Order implement the Basin Plan.

2. **National Toxics Rule (NTR) and California Toxics Rule (CTR).** USEPA adopted the NTR on December 22, 1992, and later amended it on May 4, 1995 and November 9, 1999. About forty criteria in the NTR applied in California. On May 18, 2000, USEPA adopted the CTR. The CTR promulgated new toxics criteria for California and, in addition, incorporated the previously adopted NTR criteria that were applicable in the state. The CTR was amended on February 13, 2001. These rules contain water quality criteria for priority pollutants.

3. **State Implementation Policy.** On March 2, 2000, the State Water Board adopted the *Policy for Implementation of Toxics Standards for Inland Surface Waters, Enclosed Bays, and Estuaries of California* (State Implementation Policy or SIP). The SIP became effective on April 28, 2000 with respect to the priority pollutant criteria promulgated for California by the USEPA through the NTR and to the priority pollutant objectives established by the Regional Water Board in the Basin Plan. The SIP became effective on May 18, 2000 with respect to the priority pollutant criteria promulgated by the USEPA through the CTR. The State Water Board adopted amendments to the SIP on February 24, 2005 that became effective on July 13, 2005. The SIP establishes implementation provisions for priority pollutant criteria and objectives and provisions for chronic toxicity control. Requirements of this Order implement the SIP.

4. **Alaska Rule.** On March 30, 2000, USEPA revised its regulation that specifies when new and revised State and Tribal water quality standards (WQS) become effective for CWA purposes (40 CFR 131.21, 65 FR 24641, April 27, 2000). Under the revised regulation (also known as the Alaska rule), new and revised standards submitted to USEPA after May 30, 2000, must be approved by USEPA before being used for CWA purposes. The final rule also provides that standards already in effect and submitted to USEPA by May 30, 2000, may be used for CWA purposes, whether or not approved by USEPA.

5. **Antidegradation Policy.** Section 131.12 requires that the state water quality standards include an antidegradation policy consistent with the federal policy. The State Water Board established California's antidegradation policy in State Water Board Resolution No. 68-16. Resolution No. 68-16 incorporates the federal antidegradation policy where the federal policy applies under federal law. Resolution No. 68-16 requires that existing water quality be maintained unless degradation is justified based on specific findings. The Regional Water Board's Basin Plan implements, and incorporates by reference, both the State and federal antidegradation policies. The permitted discharge must be consistent with the antidegradation provision of section 131.12 and State Water Board Resolution No. 68-16.

6. **Anti-Backsliding Requirements.** Sections 402(o)(2) and 303(d)(4) of the CWA and federal regulations at title 40, Code of Federal Regulations[1] section 122.44(l) prohibit backsliding in NPDES permits. These anti-backsliding provisions require that effluent limitations in a reissued permit must be as stringent as those in the previous permit, with some exceptions in which limitations may be relaxed.

7. **Monitoring and Reporting Requirements.** Section 122.48 of 40 CFR requires that all NPDES permits specify requirements for recording and reporting monitoring results. Sections 13267 and 13383 of the CWC authorize the Regional Water Board to require technical and monitoring reports. The Monitoring and Reporting Program (MRP) establishes monitoring and reporting requirements to implement federal and State requirements. This MRP is provided in Attachment E.

D. Impaired Water Bodies on CWA 303(d) List - Not Applicable

E. Other Plans, Polices and Regulations - Not Applicable

---

1 *All further statutory references are to title 40 of the Code of Federal Regulations unless otherwise indicated.*

IV. RATIONALE FOR EFFLUENT LIMITATIONS AND DISCHARGE SPECIFICATIONS

The CWA requires point source discharges to control the amount of conventional, non-conventional, and toxic pollutants that are discharged into the waters of the United States. The control of pollutants discharged is established through effluent limitations; and other requirements in NPDES permits. There are two principal bases for effluent limitations in the Code of Federal Regulations: section 122.44(a) requires that permits include applicable technology-based limitations and standards; and section 122.44(d) requires that permits include water quality-based effluent limitations to attain and maintain applicable numeric and narrative water quality criteria to protect the beneficial uses of the receiving water.

A. Discharge Prohibitions

The discharge prohibitions are based on the Federal Clean Water Act, Basin Plan, State Water Resources Control Board's plans and policies, U.S. Environmental Protection Agency guidance and regulations, and previous permit Order No. 01-79 provisions and are consistent with the requirements set for other discharges regulated by NPDES permits adopted by the Regional Water Board.

B. Technology-Based Effluent Limitations

1. Scope and Authority

Section 301(b) of the CWA and implementing USEPA permit regulations at section 122.44, title 40 of the Code of Federal Regulations, require that permits include conditions meeting applicable technology-based requirements at a minimum, and any more stringent effluent limitations necessary to meet applicable water quality standards. The discharge authorized by this Order must meet minimum federal technology-based requirements based on Secondary Treatment Standards at Part 133 and/or Best Professional Judgment (BPJ) in accordance with Part 125, section 125.3.

Regulations promulgated in 40 CFR §125.3(a)(1) require technology-based effluent limitations for municipal dischargers to be placed in waste discharge requirements based on Secondary Treatment Standards or Equivalent to Secondary Treatment Standards.

The Federal Water Pollution Control Act Amendments of 1972 (PL 92-500) established the minimum performance requirements for POTWs [defined in Section 304(d)(1)]. Section 301(b)(1)(B) of that Act requires that such treatment works must, as a minimum, meet effluent limitations based on secondary treatment as defined by the USEPA Administrator.

Based on this statutory requirement, USEPA developed secondary treatment regulations, which are specified in 40 CFR Part 133. These technology-based regulations apply to all municipal wastewater treatment plants and identify the minimum level of effluent quality attainable by secondary treatment in terms of biochemical oxygen demand (BOD_5), total suspended solids (TSS), and pH.

2. Applicable Technology-Based Effluent Limitations

This Facility meets the technology-based regulations for the minimum level of effluent quality attainable by secondary treatment in terms of BOD_5, total suspended solids and removal rate. This Order includes more stringent limitations for BOD_5 and total suspended solids than is required by the secondary treatment regulations.

C. Water Quality-Based Effluent Limitations (WQBELs)

1. Scope and Authority

Section 301(b) of the CWA and section 122.44(d) require that permits include limitations more stringent than applicable federal technology-based requirements where necessary to achieve applicable water quality standards.

Section 122.44(d)(1)(i) mandates that permits include effluent limitations for all pollutants that are or may be discharged at levels that have the reasonable potential to cause or contribute to an exceedance of a water quality standard, including numeric and narrative objectives within a standard. Where reasonable potential has been established for a pollutant, but there is no numeric criterion or objective for the pollutant, water quality-based effluent limitations (WQBELs) must be established using: (1) USEPA criteria guidance under CWA section 304(a), supplemented where necessary by other relevant information; (2) an indicator parameter for the pollutant of concern; or (3) a calculated numeric water quality criterion, such as a proposed state criterion or policy interpreting the state's narrative criterion, supplemented with other relevant information, as provided in section 122.44(d)(1)(vi).

The process for determining reasonable potential and calculating WQBELs when necessary is intended to protect the designated uses of the receiving water as specified in the Basin Plan, and achieve applicable water quality objectives and criteria that are contained in other state plans and policies, or any applicable water quality criteria contained in the CTR and NTR.

2. Applicable Beneficial Uses and Water Quality Criteria and Objectives

a. **The Basin Plan** specifies narrative and numeric water quality objectives applicable to surface water as follows.

Table 6. Summary of Applicable Water Quality Criteria

Constituents	Basis for Limitations
Ammonia Nitrogen	Dissociates under certain conditions to the toxic un-ionized form. Thus nitrogen discharges to the Santa Ana River, Reach 3, pose a threat to aquatic life and instream beneficial uses, as well as to the beneficial uses of affected groundwater. The Basin Plan specifies total ammonia and un-ionized ammonia objectives and an effluent limit of 4.5 mg/L for discharges to Santa Ana River, Reach 3.
Hydrogen Ion (pH)	Hydrogen Ion (pH) is a measure of Hydrogen Ion concentration in the water. A range of 6.5 to 8.5 is specified ensures suitability for biota. This objective is specified in the Basin Plan for inland surface waters.
Oil and Grease	Oil and related materials have a high surface tension and are not soluble in water, resulting in odors and visual impacts.
Total Chlorine Residual	Chlorine and its reaction product are toxic to aquatic life. To protect aquatic life, the Basin Plan specifies that for wastewater discharged into inland surface waters the chlorine residual should not exceed 0.1 mg/L
Total Dissolved Solids	High levels of TDS can adversely impact aquatic life. The TDS limit for surface water discharges is based on the amended Basin Plan wasteload allocation for this discharge, which is 700 mg/L
Total Inorganic Nitrogen	Nitrogen discharges to the Santa Ana River pose a threat to aquatic life and instream beneficial uses, as well as to the beneficial uses of affected groundwater. The TIN limit for surface water discharges is based on the amended Basin Plan wasteload allocation for this discharge, which is 10 mg/L

TDS and TIN: TDS and TIN limitations are specified in the Order for discharges to Temescal Creek and for recycled water use. The proposed TDS/TIN limits for direct discharges into Temescal Creek are based on the wasteload allocations specified in Table 5-5 of the amended Basin Plan and shown in Table 7, below. The proposed TDS limits for recycled water use are based on the water quality objectives for the Temescal Grounwater Management Zone specified in Table 4-1 of the amended Basin Plan and shown in Table 7, below.

Table 7: TDS/TIN Limitations

Constituent	TDS, mg/L	TIN, mg/L
Discharges to Temescal Creek, (waste load allocations)	700	10
Recycled water	770	--

TDS: This Order also includes a TDS limit based on the quality of the water supplied to the service area plus a reasonable use increment of TDS of 250 mg/L. This reasonable use increment is discussed and authorized in the Basin Plan.

The more restrictive of the TDS wasteload allocation-based limit or the TDS limit based on water supply quality with a reasonable use increment applies to discharges from the Facility.

In accordance with 40 CFR Section 122.45(d), there may be instances in which the basis for a limit for a particular continuous discharge may be impracticable to be stated as a maximum daily, average weekly, or average monthly effluent limitation. The Regional Water Board has determined that it is not practicable to express TDS and TIN effluent limitations as average weekly and average monthly effluent limitations because the TDS and TIN objectives in the Basin Plan were established primarily to protect the underlying groundwater. Consequently, a 12-month average period is believed to be more appropriate.

b. CTR and SIP

The California Toxics Rule (CTR) and State Implementation Policy specify numeric objectives for toxic substances and the procedures whereby these objectives are to be implemented. The procedures include those used to conduct reasonable potential analysis to determine the need for effluent limitations for priority and non-priority pollutants.

c. Requirement to meet 2.2 total coliform bacteria limit in the effluent

Article 3, Section 60305 of Title 22, Chapter 3, "Use of Recycled water for impoundments" of the California Code of Regulations specifies that recycled water used as a source of supply in a nonrestricted recreational impoundment shall be at all times an adequately disinfected, oxidized, coagulated, clarified, filtered wastewater (tertiary treated). The degree of treatment specified represents an approximately 5-log reduction in the virus content of the water. The California State Department of Health Services (CDHS) has determined that this degree of virus removal is necessary to protect the health of people using these impoundments for water contact recreation. The CDHS has developed wastewater disinfection guidelines ("Wastewater Disinfection for Health Protection", Department of Health Services, Sanitary Engineering Branch, February 1987) for discharges of wastewater to surface waters where water contact recreation (REC-1) is a beneficial use. The disinfection guidelines recommend the same treatment requirements for wastewater discharges to REC-1 waters as those stipulated in Title 22 for supply of recycled water to nonrestricted recreational impoundments, since the public health risks under both scenarios are analogous. The disinfection guidelines are based on sound science and are widely used as guidance to assure public health and beneficial use protection.

Neither Temescal Creek nor the Santa Ana River, Reach 3 are "nonrestricted recreational impoundments," nor is "recycled water[2]" being used as a supply source for the Temescal Creek and River pursuant to the definitions in Title 22. However, except during major storms, most of the flow in Temescal Creek and the Santa Ana River is composed of treated municipal wastewater discharges. Temescal Creek and the Santa Ana River are used for water contact recreation and, accordingly, are designated REC-1 (water contact beneficial use). People recreating in Temescal Creek and the River face an exposure similar to those coming in contact with recycled water in an impoundment. Therefore, to protect the water contact recreation beneficial use and to prevent nuisance and health risk, it is necessary and appropriate to require the same degree of treatment for wastewater discharges to Temescal Creek and the Santa Ana River as would be required for the use of recycled water in a nonrestricted recreational impoundment. Thus, this Order specifies requirements based on tertiary or equivalent treatment.

3. Determining the Need for WQBELs

In accordance with Section 1.3 of the SIP, the Regional Water Board conducted a reasonable potential analysis (RPA) for each priority pollutant with an applicable criterion or objective to determine if a WQBEL is required in the Order. The Regional Water Board analyzed effluent data to determine if a pollutant in a discharge has the reasonable potential to cause or contribute to an excursion above a state water quality standard. For all parameters that have the reasonable potential to cause or contribute to an excursion above a water quality standard, numeric WQBELs are required. The RPA considers criteria from the CTR, and when applicable, water quality objectives specified in the Basin Plan.

Sufficient data are needed to conduct a complete RPA. If data are not sufficient, the Discharger will be required to gather the appropriate data for the Regional Water Board to conduct the RPA. Upon review of the data, and if the Regional Water Board determines that WQBELs are needed to protect the beneficial uses, the permit will be reopened for appropriate modification.

The RPA was performed for the priority pollutants for which effluent data were available. These data were used in the RPA and are summarized in the following Table. The priority pollutants copper, zinc, mercury, selenium, and Bis(2-ethylhexyl)Phthalate are determined to have reasonable potential to exceed water quality objectives. Consequently, effluent limits for copper, zinc, mercury, selenium, and Bis(2-ethylhexyl)Phthalate are included in this Order. Lead was detected once during the last 4 years of monthly monitoring; this finding appears to be an anomaly.

---

2 *As defined in the Reclamation Criteria, recycled water means water which, as a result of treatment of domestic wastewater, is suitable for a direct beneficial use or a controlled use that would not otherwise occur.*

The Discharger has been conducting analysis for total chromium. This Order requires that monitoring be conducted for chromium VI on a monthly basis. If the analytical data show reasonable potential, the permit will be reopened to include effluent limitations for chromium VI.

The following tables summarize the RPA calculation. The RPA evaluation was conducted using monitoring data submitted by the Discharger.

Table 8. RPA Evaluation

Parameter	Unit	Effluent	CTR			Is Effluent Limit Required?		
		MEC	CMC	CCC	Human Health for consumption of water & organisms	CMC	CCC	Human Health
Selenium	µg/L	14		5.0			yes	
Zinc	µg/L	6967	264	264		yes	yes	
Copper	µg/L	63	84	52			yes	
Mercury	µg/L	0.4	0.0	0.1			yes	
Bis(2-ethylhexyl) Phthalate	µg/L	6.6	--	--	5.9	--		yes

4. WQBEL Calculations

For priority pollutants, water quality based effluent limits are based on monitoring results and the calculation process outlined in Section 1.4 of the California Toxic Rule and the Policy for Implementation of Toxics Standards for Inland Surface Waters, Enclosed Bays and Estuaries of California are summarized in the following table 9.

Table 9. Limitations Calculations

unit in ug/L

					CV = 0.6			Aquatic		Human		Permit Limit	
	Caltoxics				Acute M	Chronic M	LTA	Objective/Limits		Health Limits		Concentration Limit	
	Freshwater		Human Health		0.321	0.527		**3.11**	**1.55**	**2.01**			
Constituent	CMC	CCC	H_2O+Org	Org only	Acute LTA	Chronic LTA		MDEL	AMEL	MDEL	AMEL	MDEL	AMEL
Copper	84.10	51.64			26.99	27.22	***26.99***	83.95	41.84			**84.0**	**41.8**
Zinc	264	264			84.73	139.10	***84.73***	263.51	131.33			**264**	**131**
Mercury				0.051						0.102	0.051	**0.102**	**0.051**
Selenium		5.00			0.00	2.64	***2.64***	8.19	4.08			**8.2**	**4.1**
Bis(2-ethylhexyl) Phthalate			1.8	5.9						11.8	5.9	**11.8**	**5.9**

5. **Whole Effluent Toxicity (WET)**

This Order does not specify WET limits but requires chronic toxicity monitoring. The monitoring data indicated that for January 2006, chronic toxicity test result exceeded 1.0 TUc. The Discharger accelerated the chronic toxicity testing frequency to every two weeks. The additional samples were reported to be in compliance.

D. Best Professional Judgment -Based Effluent Limitations

For tertiary treated wastewater, the BOD_5 and TSS concentration limits are based on Best Professional Judgment. The secondary treatment standards specify BOD_5 and TSS concentration limits that are less stringent.

Table 10. Tertiary Effluent BOD_5 and TSS Limits

Constituent	Average Weekly	Average Monthly	Average Weekly Emission Rate[3] lbs/day	Average Monthly Emission Rate
Biochemical Oxygen Demand	30 mg/L	20 mg/L	250 lbs/day	167 lbs/day
Suspended Solids	30 mg/L	20 mg/L	250 lbs/day	167 lbs/day

E. Final Effluent Limitations

1. Satisfaction of Anti-Backsliding Requirements

All effluent limitations in this Order are at least as stringent as the effluent limitations in the previous Order.

2. Satisfaction of Antidegradation Policy

Discharges in conformance with the requirements of this Order will not result in a lowering of water quality and therefore conform to antidegradation requirements specified in Resolution No. 68-16, which incorporates the federal antidegradation policy at 40 CFR 131.12 where, as here, it is applicable. The Discharger is implementing a program to enhance recycled water use. No lowering of groundwater quality is projected to occur as the result of recycled water use. Where strict compliance with numeric TDS limits is infeasible, the Discharger is required by this Order, to implement an "offset program" to mitigate that water quality effect, thereby preventing a lowering of water quality.

3 Except for TDS and TIN, mass emission rates are based on 1 mgd.

3. Stringency of Requirements for Individual Pollutants

Water quality-based effluent limitations have been scientifically derived to implement water quality objectives that protect beneficial uses. Both the beneficial uses and the water quality objectives have been approved pursuant to federal law and are the applicable federal water quality standards. To the extent that toxic pollutant water quality-based effluent limitations were derived from the CTR, the CTR is the applicable standard pursuant to section 131.38. The scientific procedures for calculating the individual water quality-based effluent limitations for priority pollutants are based on the CTR-SIP, which was approved by USEPA on May 18, 2000. All beneficial uses and water quality objectives contained in the Basin Plan were approved under state law and submitted to and approved by USEPA prior to May 30, 2000. Any water quality objectives and beneficial uses submitted to USEPA prior to May 30, 2000, but not approved by USEPA before that date, are nonetheless "applicable water quality standards for purposes of the CWA" pursuant to section 131.21(c)(1). Collectively, this Order's restrictions on individual pollutants are no more stringent than required to implement the requirements of the CWA.

4. Summary of Final Effluent Limitations:

Table 11. Summary of Effluent Limitations

Parameter	Units	Effluent Limitations				
		Average Monthly	Average Weekly	Maximum Daily	Instantaneous Minimum	Instantaneous Maximum
Biochemical Oxygen Demand 5-day @ 20°C	mg/L	20	30	--	--	--
	lbs/day[1]	167	250	--	--	--
Total Suspended Solids	mg/L	20	30	--	--	--
	lbs/day[1]	167	250	--	--	--
pH	standard units	--	--	--	6.5	8.5
Total Chlorine Residual	mg/L	--	--	--	--	0.1
Ammonia-Nitrogen	mg/L	4.5	--	--	--	--
	lbs/day[1]	38	--	--	--	--
Copper	"	41.8	--	84	--	--
Zinc	"	131	--	264	--	--
Mercury	"	0.051	--	0.102	--	--
Selenium	"	4.1	--	8.2	--	--
BIS(2-ethylhexyl) Phthalate				5.9		

Notes: CO= Current Order; BP= Basin Plan

F. Interim Effluent Limitations

Section 2.1 Compliance Schedules of the SIP specifies that "Based on an existing Discharger's request and demonstration that it is infeasible for the Discharger to achieve immediate compliance with a CTR criterion, or with an effluent limitation based on a CTR criterion, the Regional Water Board may establish a compliance schedule in an NPDES permit. The Discharger has demonstrated that it is infeasible to achieve immediate compliance with effluent limits for selenium, zinc, copper, mercury, and bis(2-ethylhexyl)Phthalate and has requested a schedule for compliance with these limits in this Order. The SIP also requires (Section 2.2.1 Interim Requirements under a Compliance Schedule) that if a compliance schedule is granted and exceeds one year, the Regional Board shall establish interim numeric limitations and may impose other relevant requirements.

This Order requires that compliance with the final effluent limitations for selenium, zinc, copper, mercury, and bis(2-ethylhexyl)Phthalate specified in Table 11, above, shall be achieved as soon as possible but no later than June 30, 2009. In the interim, the Discharger is required to meet the interim limitations shown in Table 12, below until June 30, 2009:

Table 12. Summary of Interim Effluent Limitations

Parameter	Units	Effluent Limitations		Basis
		Average Monthly	Maximum Daily	
Selenium	µg/l	14	14	SIP
Zinc	µg/l	223	223	SIP
Copper	µg/l	63	63	SIP
Mercury	µg/l	0.4	0.4	SIP
Bis(2-ethylhexyl)Phthalate	µg/l	53	53	SIP

G. Land Discharge Specifications – Not Applicable

H. Reclamation Specifications

1. Section 13523 of the California Water Code provides that a Regional Water Board, after consulting with and receiving the recommendations from the California Department of Health Services (CDHS) and any party who has requested in writing to be consulted, and after any necessary hearing, shall prescribe water reclamation requirements for water which is used or proposed to be used as recycled water, if, in the judgment of the Board, such requirements are necessary to protect the public health, safety, or welfare. Section 13523 further provides that such requirements shall include, or be in conformance with, the statewide uniform water recycling criteria established by the CDHS pursuant to California Water Code Section 13521.

2. Reclamation specifications in the proposed Order are based upon the recycling criteria contained in Title 22, Division 4, Chapter 3, Sections 60301 through 60355, California Code of Regulations, "Guidelines for Use of Reclaimed Water" by the California Department of Health Services, and Pursuant to the California Water Code Section 13521. Because the recycled water is or will be used in school yards and for groundwater recharge, tertiary treatment is appropriate.

V. RATIONALE FOR RECEIVING WATER LIMITATIONS AND SPECIFICATIONS

A. Surface Water

The surface water receiving water limitations in the proposed Order are based upon the water quality objectives contained in the Basin Plan. As such, they are required part of the proposed Order.

B. Groundwater

The receiving groundwater limitations in the proposed Order are based upon the water quality objectives contained in the Basin Plan.

VI. RATIONALE FOR MONITORING AND REPORTING REQUIREMENTS

Section 122.48 of 40 CFR requires all NPDES permits to specify recording and reporting of monitoring results. Sections 13267 and 13383 of the CWC authorize the Water Boards to require technical and monitoring reports. The MRP, Attachment E of this Order, establishes monitoring and reporting requirements to implement federal and state requirements. The following provides the rationale for the monitoring and reporting requirements contained in the MRP for this Facility.

A. Influent Monitoring

This Order carries forward the treatment plant influent monitoring requirements without change. Influent monitoring is required to determine the effectiveness of the treatment program and assess treatment plant performance.

B. Effluent Monitoring

The Discharger is required to conduct monitoring of the permitted discharges in order to evaluate compliance with permit conditions. Monitoring requirements are given in the proposed monitoring and reporting program (Attachment E). This provision requires compliance with the monitoring and reporting program, and is based on 40 CFR 122.44(i), 122.62, 122.63 and 124.5. The SMP is a standard requirement in almost all NPDES permits (including the proposed Order) issued by the Regional Water Board. In addition to containing definitions of terms, it specifies general sampling/analytical protocols and the requirements of reporting of spills, violations, and routine monitoring

data in accordance with NPDES regulations, the California Water Code, and Regional Water Board's policies. The monitoring and reporting program also contains sampling program specific for the Discharger's wastewater treatment plant. It defines the sampling stations and frequency, pollutants to be monitored, and additional reporting requirements. Pollutants to be monitored include all pollutants for which effluent limitations are specified. Further, in accordance with Section 1.3 of the SIP, periodic monitoring is required for all priority pollutants defined by the CTR, for which criteria apply and for which no effluent limitations have been established, to evaluate reasonable potential to cause or contribute to an excursion above a water quality standard.

This Order modifies the monitoring requirements specified in Order No. 01-79 and adds monitoring requirements for EPA priority pollutants.

C. Whole Effluent Toxicity Testing Requirements

Whole effluent toxicity (WET) protects the receiving water quality from the aggregate toxic effect of a mixture of pollutants in the effluent. WET tests measure the degree of response of exposed aquatic test organisms to an effluent. The WET approach allows for protection of the narrative "no toxics in toxic amounts" criterion while implementing numeric criteria for toxicity. There are two types of WET tests: acute and chronic. An acute toxicity test is conducted over a shorter time period and measures mortality. A chronic toxicity test is conducted over a longer period of time and may measure mortality, reproduction, and growth.

The Basin Plan specifies a narrative objective for toxicity, requiring that all waters be maintained free of toxic substances in concentrations that are lethal to or produce other detrimental response on aquatic organisms. Detrimental response includes but is not limited to decreased growth rate, decreased reproductive success of resident or indicator species, and/or significant alterations in population, community ecology, or receiving water biota.

In addition to the Basin Plan requirements, Section 4 of the SIP states that a chronic toxicity effluent limitation is required in permits for all discharges that will cause, have the reasonable potential to cause, or contribute to chronic toxicity in receiving waters. Therefore, in accordance with the SIP, this Order requires the Discharger to conduct chronic toxicity testing. In addition, the Order establishes thresholds that when exceeded requires the Discharger to conduct accelerated toxicity testing and/or conduct toxicity identification evaluation (TIE) studies.

This Order requires the Discharger to conduct chronic toxicity testing of the effluent on a monthly basis. The Order also requires the Discharger to conduct an Initial Investigation Toxicity Reduction Evaluation (IITRE) program when either the two-month median of toxicity test results exceeds 1 TUc or any single test exceeds 1.7 TUc for survival endpoint. Based on the results of this investigation program and at the discretion of the Executive Officer, a more rigorous Toxicity Reduction Evaluation/Toxicity Identification Evaluation (TRE/TIE) may be required. A re-opener provision is included in the Order to incorporate a chronic toxicity effluent limitation if warranted by the toxicity test results.

D. Receiving Water Monitoring

1. Surface Water

Receiving water monitoring is required to determine compliance with receiving water limitations and to characterize the water quality of the receiving water. Requirements are based on the Basin Plan.

2. Temescal Management Zone – Not Applicable

E. Other Monitoring Requirements

1. **Water Supply Monitoring -** The Discharger will be required to collect a sample of each source of water supplied and analyze for total dissolved solids. The result of this monitoring will to show compliance with TDS limitations in the Order.

2. **Biosolids Monitoring** – The Facility continues to transport its biosolids to the City of Corona's Wastewater Treatment Plant No. 2.

3. **Pretreatment Monitoring** – Not Applicable.

VII. RATIONALE FOR PROVISIONS

A. Standard Provisions

Standard Provisions, which in accordance with 40 CFR §§122.41and 122.42, apply to all NPDES discharges and must be included in every NPDES permit, are provided in Attachment D to the Order.

Title 40 CFR Section 122.41(a)(1) and (b) through (n) establish conditions that apply to all State-issued NPDES permits. These conditions must be incorporated into the permits either expressly or by reference. If incorporated by reference, a specific citation to the regulations must be included in the Order. 40 CFR Section 123.25(a)(12) allows the State to omit or modify conditions to impose more stringent requirements. In accordance with Section 123.25, this Order omits federal conditions that address

enforcement authority specified in 40 CFR Sections 122.41(j)(5) and (k)(2) because the enforcement authority under the CWC is more stringent. In lieu of these conditions, this Order incorporates by reference CWC Section 13387(e).

B. Special Provisions

1. Reopener Provisions

This provision is based on 40 CFR Part 123. The Regional Water Board may reopen the permit to modify permit conditions and requirements. Causes for modifications include the promulgation of new regulations, modification in sludge use or disposal practices, or adoption of new regulations by the State Board or Regional Water Board, including revisions to the Basin Plan.

2. Special Studies and Additional Monitoring Requirements

a. Toxicity Identification Evaluations or Toxicity Reduction Evaluations. This provision is based on the SIP, Section 4, Toxicity Control Provisions.

3. **Best Management Practices and Pollution Prevention** - The requirements are based on the SIP Section 2.4.5.1

4. **Construction, Operation, and Maintenance Specifications** - The requirements are based on requirements that were specified in the prior Order.

5. Special Provisions for Municipal Facilities (POTWs Only)

a. Sewer Collection System Requirements: This requirement is based on a memorandum from the State Water Board regarding enrolment under General Waste Discharge Requirements for Collection System Agencies (Order No. 2006-0003 DWQ)

b. Biosolids: On February 19, 1993, the USEPA issued a final rule for the use and disposal of sewage sludge, 40 CFR, Part 503. This rule requires that producers of sewage sludge meet certain reporting, handling, and disposal requirements. The State of California has not been delegated the authority to implement this program, therefore, the U.S. Environmental Protection Agency is the implementing agency.

c. Pretreatment: The treatment plant capacity is 1 mgd and there are no industrial users within the service areas. Consequently, this Order does not contain requirements for the implementation of an effective pretreatment program pursuant to Section 307 of the Federal Clean Water Act; Parts 35 and 403 of Title 40, Code of Federal Regulations (40 CFR 35 and 40 CFR 403); and/or Section 2233, Title 23, California Code of Regulations.

6. Other Specific Provision – Not Applicable

7. Compliance Schedules

This Order establishes final effluent limitations for Selenium, Zinc, Copper, Mercury, and Bis(2-ethylhexyl)Phthalate that are new limits for the discharges. This Order also contains a compliance schedule that provides the Discharger time to bring their discharges into compliance with the newly established final limits. In accordance with Section 2.1 of the SIP, compliance schedules can only be provided by the Board after the Discharger has submitted a report that demonstrates that it is infeasible for the Discharger to achieve immediate compliance with newly established final effluent limitations.

On March 3, 2007, the Discharger requested that a compliance schedule for Selenium, Zinc, Copper, Mercury, and Bis(2-ethylhexyl)Phthalate limitations be included in this Order. The Discharger demonstrated that immediate compliance with the proposed effluent limitations for these pollutants is infeasible.

The compliance schedule included in this Order is based on the shortest practicable time required to achieve compliance. This Order includes interim and final limits and a schedule for compliance with the final limitations. The maximum detected effluent concentrations for these pollutants are set as the interim average monthly effluent limits. This is in accordance with SIP Section 2.2.1, which stipulates that "Numeric interim limitations for the pollutant must be based on current treatment Facility performance or on existing permit limitations, whichever is more stringent."

The proposed permit allows the Discharger up to June 30, 2009, to achieve compliance with the final limitations for Selenium, Zinc, Copper, Mercury, and Bis(2-ethylhexyl)Phthalate. Annual reporting is required to inform the Regional Board about the progress made by the Discharger to achieve compliance with the final limitations within the specified time.

VIII. PUBLIC PARTICIPATION

The California Regional Water Quality Control Board, Santa Ana Region (Regional Water Board) is considering the issuance of waste discharge requirements (WDRs) that will serve as a National Pollutant Discharge Elimination System (NPDES) permit for the Riverside Regional Water Quality Control Plant. As a step in the WDR adoption process, the Regional Water Board staff has developed tentative WDRs. The Regional Water Board encourages public participation in the WDR adoption process.

A. Notification of Interested Parties

The Regional Water Board has notified the Discharger and interested agencies and persons of its intent to prescribe waste discharge requirements for the discharge and has provided them with an opportunity to submit their written comments and recommendations. Notification was provided through the posting of Notice of Public Hearing at the City Hall and publication in the local newspaper. Notification was also provided on the Regional Water Board website: http://www.waterboards.ca.gov/santaana , on April 9, 2007.

B. Written Comments

The staff determinations are tentative. Interested persons are invited to submit written comments concerning these tentative WDRs. Comments should be submitted either in person or by mail to the Executive Office at the Regional Water Board at the address above on the cover page of this Order.

To be fully responded to by staff and considered by the Regional Water Board, written comments should be received at the Regional Water Board offices by 5:00 p.m. on April 2, 2007 to:

J. Shami
California Regional Water Quality Control Board
Santa Ana Region
3737 Main Street, Suite 500
Riverside, CA 92501-3488

C. Public Hearing

The Regional Water Board will hold a public hearing on the tentative WDRs during its regular Board meeting on the following date and time and at the following location:

DATE: April 20, 2007
TIME: 9:30 a.m.
PLACE: City Council Chambers of Loma Linda
25541 Barton Road
City of Loma Linda

Interested persons are invited to attend. At the public hearing, the Regional Water Board will hear testimony, if any, pertinent to the discharge, WDRs, and permit. Oral testimony will be heard; however, for accuracy of the record, important testimony should be in writing.

Please be aware that dates and venues may change. Our web address is http://www.waterboards.ca.gov/santaana where you can access the current agenda for changes in dates and locations.

D. Waste Discharge Requirements Petitions

Any aggrieved person may petition the State Water Resources Control Board to review the decision of the Regional Water Board regarding the final WDRs. The petition must be submitted within 30 days of the Regional Water Board's action to the following address:

State Water Resources Control Board
Office of Chief Counsel
P.O. Box 100, 1001 I Street
Sacramento, CA 95812-0100

E. Information and Copying

The Report of Waste Discharge (RWD), related documents, tentative effluent limitations and special provisions, comments received, and other information are on file and may be inspected at the address above at any time between 9:00 a.m. and 3:00 p.m. Monday through Friday. Copying of documents may be arranged through the Regional Water Board by calling (951) 782-4130.

F. Register of Interested Persons

Any person interested in being placed on the mailing list for information regarding the WDRs and NPDES permit should contact the Regional Water Board, reference this Facility, and provide a name, address, and phone number.

G. Additional Information

Requests for additional information or questions regarding this Order should be directed to J. Shami at (951) 782-3288.

ATTACHMENT G – EPA PRIORITY POLLUTANT LIST

CTR Number	Parameter	CAS Number	Suggested Analytical Methods
1	Antimony	7440360	EPA 6020/200.8
2	Arsenic	7440382	EPA 1632
3	Beryllium	7440417	EPA 6020/200.8
4	Cadmium	7440439	EPA 1638/200.8
5a	Chromium (III)	16065831	EPA 6020/200.8
5a	Chromium (VI)	18540299	EPA 7199/1636
6	Copper	7440508	EPA 6020/200.8
7	Lead	7439921	EPA 1638
8	Mercury	7439976	EPA 1669/1631
9	Nickel	7440020	EPA 6020/200.8
10	Selenium	7782492	EPA 6020/200.8
11	Silver	7440224	EPA 6020/200.8
12	Thallium	7440280	EPA 6020/200.8
13	Zinc	7440666	EPA 6020/200.8
14	Cyanide	57125	EPA 9012A
15	Asbestos	1332214	EPA/600/R-93/116(PCM)
16	2,3,7,8-TCDD	1746016	EPA 8290 (HRGC) MS
17	Acrolein	107028	EPA 8260B
18	Acrylonitrile	107131	EPA 8260B
19	Benzene	71432	EPA 8260B
20	Bromoform	75252	EPA 8260B
21	Carbon Tetrachloride	56235	EPA 8260B
22	Chlorobenzene	108907	EPA 8260B
23	Chlorodibromomethane	124481	EPA 8260B
24	Chloroethane	75003	EPA 8260B
25	2-Chloroethylvinyl Ether	110758	EPA 8260B
26	Chloroform	67663	EPA 8260B
27	Dichlorobromomethane	75274	EPA 8260B
28	1,1-Dichloroethane	75343	EPA 8260B
29	1,2-Dichloroethane	107062	EPA 8260B
30	1,1-Dichloroethylene	75354	EPA 8260B
31	1,2-Dichloropropane	78875	EPA 8260B
32	1,3-Dichloropropylene	542756	EPA 8260B
33	Ethylbenzene	100414	EPA 8260B
34	Methyl Bromide	74839	EPA 8260B
35	Methyl Chloride	74873	EPA 8260B
36	Methylene Chloride	75092	EPA 8260B
37	1,1,2,2-Tetrachloroethane	79345	EPA 8260B
38	Tetrachloroethylene	127184	EPA 8260B
39	Toluene	108883	EPA 8260B

CTR Number	Parameter	CAS Number	Suggested Analytical Methods
40	1,2-Trans-Dichloroethylene	156605	EPA 8260B
41	1,1,1-Trichloroethane	71556	EPA 8260B
42	1,12-Trichloroethane	79005	EPA 8260B
43	Trichloroethylene	79016	EPA 8260B
44	Vinyl Chloride	75014	EPA 8260B
45	2-Chlorophenol	95578	EPA 8270C
46	2,4-Dichlorophenol	120832	EPA 8270C
47	2,4-Dimethylphenol	105679	EPA 8270C
48	2-Methyl-4,6-Dinitrophenol	534521	EPA 8270C
49	2,4-Dinitrophenol	51285	EPA 8270C
50	2-Nitrophenol	88755	EPA 8270C
51	4-Nitrophenol	100027	EPA 8270C
52	3-Methyl-4-Chlorophenol	59507	EPA 8270C
53	Pentachlorophenol	87865	EPA 8270C
54	Phenol	108952	EPA 8270C
55	2,4,6-Trichlorophenol	88062	EPA 8270C
56	Acenaphthene	83329	EPA 8270C
57	Acenaphthylene	208968	EPA 8270C
58	Anthracene	120127	EPA 8270C
59	Benzidine	92875	EPA 8270C
60	Benzo(a)Anthracene	56553	EPA 8270C
61	Benzo(a)Pyrene	50328	EPA 8270C
62	Benzo(b)Fluoranthene	205992	EPA 8270C
63	Benzo(ghi)Perylene	191242	EPA 8270C
64	Benzo(k)Fluoranthene	207089	EPA 8270C
65	Bis(2-Chloroethoxy)Methane	111911	EPA 8270C
66	Bis(2-Chloroethyl)Ether	111444	EPA 8270C
67	Bis(2-Chloroisopropyl)Ether	108601	EPA 8270C
68	Bis(2-Ethylhexyl)Phthalate	117817	EPA 8270C
69	4-Bromophenyl Phenyl Ether	101553	EPA 8270C
70	Butylbenzyl Phthalate	85687	EPA 8270C
71	2-Chloronaphthalene	91587	EPA 8270C
72	4-Chlorophenyl Phenyl Ether	7005723	EPA 8270C
73	Chrysene	218019	EPA 8270C
74	Dibenzo(a,h)Anthracene	53703	EPA 8270C
75	1,2-Dichlorobenzene	95501	EPA 8260B
76	1,3-Dichlorobenzene	541731	EPA 8260B
77	1,4-Dichlorobenzene	106467	EPA 8260B
78	3,3'-Dichlorobenzidine	91941	EPA 8270C
79	Diethyl Phthalate	84662	EPA 8270C
80	Dimethyl Phthalate	131113	EPA 8270C
81	Di-n-Butyl Phthalate	84742	EPA 8270C
82	2,4-Dinitrotoluene	121142	EPA 8270C

CTR Number	Parameter	CAS Number	Suggested Analytical Methods
83	2,6-Dinitrotoluene	606202	EPA 8270C
84	Di-n-Octyl Phthalate	117840	EPA 8270C
85	1,2-Diphenylhydrazine	122667	EPA 8270C
86	Fluoranthene	206440	EPA 8270C
87	Fluorene	86737	EPA 8270C
88	Hexachlorobenzene	118741	EPA 8260B
89	Hexachlorobutadiene	87863	EPA 8260B
90	Hexachlorocyclopentadiene	77474	EPA 8270C
91	Hexachloroethane	67721	EPA 8260B
92	Indeno(1,2,3-cd)Pyrene	193395	EPA 8270C
93	Isophorone	78591	EPA 8270C
94	Naphthalene	91203	EPA 8260B
95	Nitrobenzene	98953	EPA 8270C
96	N-Nitrosodimethylamine	62759	EPA 8270C
97	N-Nitrosodi-n-Propylamine	621647	EPA 8270C
98	N-Nitrosodiphenylamine	86306	EPA 8270C
99	Phenanthrene	85018	EPA 8270C
100	Pyrene	129000	EPA 8270C
101	1,2,4-Trichlorobenzene	120821	EPA 8260B
102	Aldrin	309002	EPA 8081A
103	alpha-BHC	319846	EPA 8081A
104	beta-BHC	319857	EPA 8081A
105	gamma-BHC	58899	EPA 8081A
106	delta-BHC	319868	EPA 8081A
107	Chlordane	57749	EPA 8081A
108	4,4'-DDT	50293	EPA 8081A
109	4,4'-DDE	72559	EPA 8081A
110	4,4'-DDD	72548	EPA 8081A
111	Dieldrin	60571	EPA 8081A
112	alpha-Endosulfan	959988	EPA 8081A
113	beta-Endosulfan	33213659	EPA 8081A
114	Endosulfan Sulfate	1031078	EPA 8081A
115	Endrin	72208	EPA 8081A
116	Endrin Aldehyde	7421934	EPA 8081A
117	Heptachlor	76448	EPA 8081A
118	Heptachlor Epoxide	1024573	EPA 8081A
119	PCB-1016	12674112	EPA 8082
120	PCB-1221	11104282	EPA 8082
121	PCB-1232	11141165	EPA 8082
122	PCB-1242	53469219	EPA 8082
123	PCB-1248	12672296	EPA 8082
124	PCB-1254	11097691	EPA 8082
125	PCB-1260	11096825	EPA 8082
126	Toxaphene	8001352	EPA 8081A

ATTACHMENT H – MINIMUM LEVELS

MINIMUM LEVELS IN PPB (µg/L)

Table 1- VOLATILE SUBSTANCES[1]	GC	GCMS
Acrolein	2.0	5
Acrylonitrile	2.0	2
Benzene	0.5	2
Bromoform	0.5	2
Carbon Tetrachloride	0.5	2
Chlorobenzene	0.5	2
Chlorodibromomethane	0.5	2
Chloroethane	0.5	2
Chloroform	0.5	2
Dichlorobromomethane	0.5	2
1,1 Dichloroethane	0.5	1
1,2 Dichloroethane	0.5	2
1,1 Dichloroethylene	0.5	2
1,2 Dichloropropane	0.5	1
1,3 Dichloropropylene (volatile)	0.5	2
Ethylbenzene	0.5	2
Methyl Bromide (*Bromomethane*)	1.0	2
Methyl Chloride (*Chloromethane*)	0.5	2
Methylene Chloride (*Dichloromethane*)	0.5	2
1,1,2,2 Tetrachloroethane	0.5	1
Tetrachloroethylene	0.5	2
Toluene	0.5	2
trans-1,2 Dichloroethylene	0.5	1
1,1,1 Trichloroethane	0.5	2
1,1,2 Trichloroethane	0.5	2
Trichloroethylene	0.5	2
Vinyl Chloride	0.5	2
1,2 Dichlorobenzene (volatile)	0.5	2
1,3 Dichlorobenzene (volatile)	0.5	2
1,4 Dichlorobenzene (volatile)	0.5	2

Selection and Use of Appropriate ML Value:

ML Selection: When there is more than one ML value for a given substance, the discharger may select any one of those ML values, and their associated analytical methods, listed in this Attachment that are below the calculated effluent limitation for compliance determination. If no ML value is below the effluent limitation, then the discharger shall select the lowest ML value, and its associated analytical method, listed in the PQL Table.

ML Usage: The ML value in this Attachment represents the lowest quantifiable concentration in a sample based on the proper application of all method-based analytical procedures and the absence of any matrix interferences. Assuming that all method-specific analytical steps are followed, the ML value will also represent, after the appropriate application of method-specific factors, the lowest standard in the calibration curve for that specific analytical technique. Common analytical practices sometimes require different treatment of the sample relative to calibration standards.
Note: chemical names in parenthesis and italicized is another name for the constituent.

[1] The normal method-specific factor for these substances is 1, therefore, the lowest standard concentration in the calibration curve is equal to the above ML value for each substance.

MINIMUM LEVELS IN PPB (µg/L)

Table 2 – Semi-Volatile Substances[2]	GC	GCMS	LC
2-Chloroethyl vinyl ether	1	1	
2 Chlorophenol	2	5	
2,4 Dichlorophenol	1	5	
2,4 Dimethylphenol	1	2	
4,6 Dinitro-2-methylphenol	10	5	
2,4 Dinitrophenol	5	5	
2- Nitrophenol		10	
4- Nitrophenol	5	10	
4 Chloro-3-methylphenol	5	1	
2,4,6 Trichlorophenol	10	10	
Acenaphthene	1	1	0.5
Acenaphthylene		10	0.2
Anthracene		10	2
Benzidine		5	
Benzo (a) Anthracene (*1,2 Benzanthracene*)	10	5	
Benzo(a) pyrene (*3,4 Benzopyrene*)		10	2
Benzo (b) Flouranthene (*3,4 Benzofluoranthene*)		10	10
Benzo(g,h,i)perylene		5	0.1
Benzo(k)fluoranthene		10	2
bis 2-(1-Chloroethoxyl) methane		5	
bis(2-chloroethyl) ether	10	1	
bis(2-Chloroisopropyl) ether	10	2	
bis(2-Ethylhexyl) phthalate	10	5	
4-Bromophenyl phenyl ether	10	5	
Butyl benzyl phthalate	10	10	
2-Chloronaphthalene		10	
4-Chlorophenyl phenyl ether		5	
Chrysene		10	5
Dibenzo(a,h)-anthracene		10	0.1
1,2 Dichlorobenzene (semivolatile)	2	2	
1,3 Dichlorobenzene (semivolatile)	2	1	
1,4 Dichlorobenzene (semivolatile)	2	1	
3,3' Dichlorobenzidine		5	
Diethyl phthalate	10	2	
Dimethyl phthalate	10	2	
di-n-Butyl phthalate		10	
2,4 Dinitrotoluene	10	5	
2,6 Dinitrotoluene		5	
di-n-Octyl phthalate		10	
1,2 Diphenylhydrazine		1	
Fluoranthene	10	1	0.05
Fluorene		10	0.1
Hexachloro-cyclopentadiene	5	5	
1,2,4 Trichlorobenzene	1	5	

MINIMUM LEVELS IN PPB (µg/L)

Table 2 - SEMI-VOLATILE SUBSTANCES[2]	GC	GCMS	LC	COLOR
Pentachlorophenol	1	5		
Phenol [3]	1	1		50
Hexachlorobenzene	5	1		
Hexachlorobutadiene	5	1		
Hexachloroethane	5	1		
Indeno(1,2,3,cd)-pyrene		10	0.05	
Isophorone	10	1		
Naphthalene	10	1	0.2	
Nitrobenzene	10	1		
N-Nitroso-dimethyl amine	10	5		
N-Nitroso -di n-propyl amine	10	5		
N-Nitroso diphenyl amine	10	1		
Phenanthrene		5	0.05	
Pyrene		10	0.05	

Table 3– INORGANICS[4]	FAA	GFAA	ICP	ICPMS	SPGFAA	HYDRIDE	CVAA	COLOR	DCP
Antimony	10	5	50	0.5	5	0.5			1000
Arsenic		2	10	2	2	1		20	1000
Beryllium	20	0.5	2	0.5	1				1000
Cadmium	10	0.5	10	0.25	0.5				1000
Chromium (total)	50	2	10	0.5	1				1000
Chromium VI	5							10	
Copper	25	5	10	0.5	2				1000
Lead	20	5	5	0.5	2				10000
Mercury				0.5			0.2		
Nickel	50	5	20	1	5				1000
Selenium		5	10	2	5	1			1000
Silver	10	1	10	0.25	2				1000
Thallium	10	2	10	1	5				1000
Zinc	20		20	1	10				1000
Cyanide								5	

[2] With the exception of phenol by colorimetric technique, the normal method-specific factor for these substances is 1000, therefore, the lowest standards concentration in the calibration curve is equal to the above ML value for each substance multiplied by 1000.

[3] Phenol by colorimetric technique has a factor of 1.

[4] The normal method-specific factor for these substances is 1, therefore, the lowest standard concentration in the calibration curve is equal to the above ML value for each substance.

MINIMUM LEVELS IN PPB (µg/L)

Table 4- PESTICIDES – PCBs[5]	GC
Aldrin	0.005
alpha–BHC (*a-Hexachloro-cyclohexane*)	0.01
beta–BHC (*b-Hexachloro-cyclohexane*)	0.005
Gamma–BHC (*Lindane; g-Hexachloro-cyclohexane*)	0.02
Delta-BHC (*d-Hexachloro-cyclohexane*)	0.005
Chlordane	0.1
4,4'-DDT	0.01
4,4'-DDE	0.05
4,4'-DDD	0.05
Dieldrin	0.01
Alpha-Endosulfan	0.02
Beta-Endosulfan	0.01
Endosulfan Sulfate	0.05
Endrin	0.01
Endrin Aldehyde	0.01
Heptachlor	0.01
Heptachlor Epoxide	0.01
PCB 1016	0.5
PCB 1221	0.5
PCB 1232	0.5
PCB 1242	0.5
PCB 1248	0.5
PCB 1254	0.5
PCB 1260	0.5
Toxaphene	0.5

Techniques:
GC - Gas Chromatography
GCMS - Gas Chromatography/Mass Spectrometry
HRGCMS - High Resolution Gas Chromatography/Mass Spectrometry (i.e., EPA 1613, 1624, or 1625)
LC - High Pressure Liquid Chromatography
FAA - Flame Atomic Absorption
GFAA - Graphite Furnace Atomic Absorption
HYDRIDE - Gaseous Hydride Atomic Absorption
CVAA - Cold Vapor Atomic Absorption
ICP - Inductively Coupled Plasma
ICPMS - Inductively Coupled Plasma/Mass Spectrometry
SPGFAA - Stabilized Platform Graphite Furnace Atomic Absorption (i.e., EPA 200.9)
DCP - Direct Current Plasma
COLOR – Colorimetric

[5] The normal method-specific factor for these substances is 100, therefore, the lowest standard concentration in the calibration curve is equal to the above ML value for each substance multiplied by 100.