ITEM NO. 9

August 13, 2004

ERRATA SHEET

CHANGES TO ORDER NO. R8-2004-0020, NPDES NO. CA 8000073

(Language deleted is ~~strike through~~)
(Language added is shaded)

1. Order No. R8-2004-0020, page 10 of 32, Discharge Specification, revise Footnotes 14 and 16 of A. 2 and re-number subsequent footnotes accordingly:

   2. The discharge of wastewater or use of recycled water shall at all times be a filtered and subsequently disinfected wastewater that meets the following criteria:

      a. Filtered wastewater means an oxidized wastewater that meets either (1) or (2), below:

         1) Has been coagulated and passed through natural undisturbed soils or a bed of filter media pursuant to the following:

            a) At a rate that does not exceed 5 gallons per minute per square foot of surface area in mono, dual or mixed media gravity, upflow or pressure filtration systems, or does not exceed 2 gallons per minute per square foot of surface area in traveling bridge automatic backwash filters, based on peak dry weather design flow[14]; and

            b) The turbidity of the filtered wastewater does not exceed any of the following:

               i. An average of 2 Nephelometric Turbidity Unit (NTU) within a 24-hour period;

               ii. 5 NTU more than 5 percent of the time within a 24-hour period; and

               iii. 10 NTU at any time[15].

---

14 *Filter rates, **CT, and modal contact time requirements** are applicable only to the use of recycled water and not to surface water discharges, **provided that the receiving water provides a 1:1 dilution**.*

15 *See Section G.7. Compliance Determination.*

2) Has been passed through a microfiltration, ultrafiltration, nanofiltration, or reverse osmosis membrane so that the turbidity of the filtered wastewater does not exceed any of the following:

a) 0.2 NTU more than 5 percent of the time within a 24-hour period; and

b) 0.5 NTU at any time.

b. Disinfected tertiary wastewater shall mean a filtered wastewater that has been disinfected and meets the following criteria:

1) The filtered wastewater has been disinfected by either:

a) A chlorine disinfection process following filtration that provides a CT (the product of total chlorine residual and modal contact time measured at the same point) value of not less than 450 milligram-minutes per liter at all times with a modal contact time of at least 90 minutes[~~14~~15], based on peak dry weather design flow[~~16~~16]; or

b) A disinfection process that, when combined with the filtration process, demonstrates[~~17~~17] inactivation and/or removal of 99.999 percent of the plaque-forming units of F-specific bacteriophage MS-2[~~18~~18], or polio virus in the wastewater. A virus that is at least as resistant to disinfection as polio virus may be used for purposes of the demonstration.

2) The average weekly concentration of total coliform bacteria measured in the disinfected effluent shall not exceed an MPN of 2.2 per 100 milliliters. The average weekly concentration shall be evaluated using the median of the bacteriological results of the last seven days[~~20~~19].

3) The number of total coliform bacteria shall not exceed an MPN of 23 per 100 milliliters in more than one sample in any calendar month.

4) The number of total coliform bacteria shall not exceed an MPN of 240 per 100 milliliters in any sample.

~~16~~ ~~*The modal contact time requirement and the CT requirement are applicable only to the use of recycled water and not to surface water discharges.*~~

16 *"Peak Dry Weather Flow" means the arithmetic mean of the maximum peak flow rates sustained over some period of time (for example three hours) during the maximum 24-hour dry weather period. Dry weather period is defined as period of little or no rainfall.*

17 *Meeting the discharge limits in A.2.b.(2),(3),and (4) shall constitute the demonstration required by this sub-paragraph.*

18 *F-Specific bacteriophage MS-2 means a strain of a specific type of virus that infects coliform bacteria that is traceable to the American Type Culture Collection (ATCC) 15597B1) and is grown on lawns of E. coli (ATCC 15597).*

19 *See Section G.8. Compliance Determination.*

c. A coagulated wastewater shall be an oxidized wastewater in which colloidal and finely divided suspended matter have been destabilized and agglomerated upstream from a filter by the addition of suitable floc-forming chemicals.

d. An oxidized wastewater shall be wastewater in which the organic matter has been stabilized, is non-putrescible, and contains dissolved oxygen.

California Regional Water Quality Control Board
Santa Ana Region
3737 Main Street, Suite 500
Riverside, CA 92501-3348

August 13, 2004

ITEM NO: 9

SUBJECT: Waste Discharge and Producer/User Water Recycling Requirements for the Inland Empire Utilities Agency's Carbon Canyon Water Reclamation Facility, San Bernardino County, Order No. R8-2004-0020, NPDES CA8000073

DISCUSSION:

See attached Fact Sheet

RECOMMENDATION:

Adopt Order No. R8-2004-0020, NPDES No. CA 8000073, as presented.

COMMENTS SOLICITED:

Comments were solicited from the following agencies:

U.S. Environmental Protection Agency, Permits Issuance Section (WTR-5) – Doug Eberhardt
U.S. Army District, Los Angeles, Corps of Engineers, Regulatory Branch
U.S. Fish and Wildlife Service, Carlsbad
State Water Resources Control Board, Office of the Chief Counsel - Jorge Leon
State Water Resources Control Board, Division of Water Quality - James Maughan
State Department of Water Resources, Glendale
State Department of Fish and Game, Long Beach
California Department of Health Services, San Bernardino
California Department of Health Services, Carpinteria – Jeff Stone
San Bernardino County Transportation/Flood Control District – Naresh Varma
San Bernardino County Environmental Health Services – Daniel Avera
Orange County Water District - Nira Yamachika
City of Chino - Public Works Department, Engineering Division – Jim Hill
City of Chino Hills - Public Works Department
Santa Ana River Discharger's Association – Roger Turner
Santa Ana Watershed Project Authority – Joseph Grindstaff
Inland Empire Utilities Agency – Patrick Sheilds
Orange County Coastkeeper
Lawyers for Clean Water C/c San Francisco Baykeeper

California Regional Water Quality Control Board
Santa Ana Region
3737 Main Street, Suite 500
Riverside, CA 92501-3348

August 13, 2004

FACT SHEET

The attached pages contain information concerning an application for the renewal of waste discharge requirements and producer/user water recycling requirements and a National Pollutant Discharge Elimination System (NPDES) permit.

A. FACILITY DESCRIPTION:

On December 26, 2003, Inland Empire Utilities Agency (IEUA) submitted a Report of Waste Discharge and a National Pollutant Discharge Elimination System Permit application for the renewal of waste discharge requirements for IEUA's Carbon Canyon Water Reclamation Facility (CCWRF).

IEUA owns and operates the CCWRF located at 14950 Telephone Avenue, at the southwest corner of the intersection of Chino Hills Parkway and Telephone Avenue in the City of Chino, San Bernardino County. The facility is designed to treat 11.4 million gallons per day (mgd) of wastewater. The facility treats approximately 11.4 million gallons per day (mgd) of raw sewage and discharges approximately 9.7 mgd of tertiary treated wastewater into Chino Creek. The discharge from the facility is currently regulated under Waste Discharge Requirements Order No. 99-36, NPDES No. CA 8000073, which was issued on June 25, 1999. This Order expired on June 1, 2004 but was administratively extended.

The treatment facility receives domestic, commercial, and industrial wastes generated within the Cities of Chino, Chino Hills, Montclair, and Upland. A portion of raw sewage from the Cities of Chino and Chino Hills could be diverted either to IEUA's RP-5[1] or to CCWRF. Wastewater influent flows to CCWRF have reached the 11.4 mgd design capacity of the plant, however all flows from the City of Montclair can be diverted to IEUA's Regional Plant No. 1 facility[2] in Ontario and wastewater flows from the City of Upland, originating west of Mountain Avenue, can also be diverted to IEUA's Regional Plant No. 5 facility. Any influent flow in excess of the Title 22 design capacity of CCWRF is diverted to IEUA's RP-5 for treatment. Therefore, no treatment plant expansion is necessary or required for this plant.

The liquid treatment process at CCWRF consists of the following:

1. Preliminary and primary treatment consists of screening, grit removal, chemical addition, primary clarification and primary sludge pumping,

---

1 *Regional Plant No. 5 is a municipal wastewater treatment plant located approximately 1.35 miles southeast of the Carbon Canyon Water Reclamation Facility.*

2 *Regional Plant No. 1 is a municipal wastewater treatment plant located at 2450 East Philadelphia Avenue in the Ontario area of San Bernardino County.*

2. Secondary treatment consists of an activated sludge process, secondary clarification, sludge recycling and sludge wasting.

3. Tertiary treatment consists of coagulation, filtration, chlorination and dechlorination.

Sludge and solids at CCWRF are pumped to and treated at IEUA's RP-2 facility[3] at a flow rate of about 1.2 mgd. CCWRF is designed to transfer and treat the recycled flow from RP-2. Solids treatment includes gravity thickeners and dissolved air flotation thickeners, anaerobic digestion, digester gas utilization, and belt press dewatering. Dewatered sludge is hauled away for offsite disposal. The operation of solids treatment at RP-2 is regulated under waste discharge requirements Order R8-2003-0003, issued to IEUA's RP-5 plant.

The tertiary treated wastewater is discharged to Reach 2 of Chino Creek, which is a tributary to Reach 3 of the Santa Ana River. The discharge outfall is located at latitude 33°58'47"N and longitude 117°41'39"W.

About 0.7 mgd of the treated wastewater is used for landscape irrigation at various sites and about 0.9 mgd is used for on-site utilities water usage.

The facility location map is shown on Attachment A and the wastewater treatment process flow diagram is shown on Attachment B of this Fact Sheet.

B. STORMWATER MANAGEMENT:

All stormwater flows from the CCWRF site are fully contained in an onsite 9 million gallon capacity emergency storage basin. All water captured in this basin is pumped to the treatment plant headworks for treatment. As there is no direct discharge of stormwater runoff from the site into surface waters, no stormwater requirements or monitoring are specified in this Order.

C. REGULATORY BASIS FOR WASTE DISCHARGE REQUIREMENTS:

This Order includes requirements that implement the Water Quality Control Plan (Basin Plan), which was adopted by the Regional Board on March 11, 1994. This Basin Plan became effective on January 24, 1995. This Plan specifies water quality objectives and beneficial uses for the waters of the Santa Ana Region.

---

3 *RP-2 is a municipal wastewater treatment plant located on the northwest corner of El Prado Road and Pine Avenue, at 16400 El Prado Road in the Chino area of San Bernardino County. Wastewater discharges from this plant have ceased. Only the solids treatment facilities at RP-2 are currently being operated by IEUA.*

The CCWRF discharges tertiary treated wastewater to Reach 2 of Chino Creek, which joins Reach 3 of Santa Ana River in the Prado Dam area. The beneficial uses of Reach 2 of Chino Creek include water contact recreation, non-contact water recreation, limited warm freshwater habitat, and wildlife habitat. Chino Creek is tributary to Reach 3 of the Santa Ana River, which has the following beneficial uses: agricultural supply, groundwater recharge, water contact recreation, non-water contact recreation, warm freshwater habitat, wildlife habitat, and rare, threatened or endangered species. The discharge point overlies the Chino III Groundwater Subbasin, the beneficial uses of which include municipal and domestic supply, agricultural supply, industrial service supply, and industrial process supply. Receiving waters that may be affected by the discharge include the downgradient groundwater subbasins in Orange County, which are used for municipal and domestic supply and other uses.

Except during storms, the flow in Chino Creek and the Santa Ana River is comprised of effluent discharges from municipal wastewater treatment facilities, including the discharge from the Carbon Canyon facility, and very little natural flow exists. Therefore, Reach 3 of the Santa Ana River is an effluent dominated water body (EDW).

Article 3, Section 60305 of Title 22, Division 4, Chapter 3, "Water Recycling Criteria" of the California Code of Regulations specifies that recycled water used as a source supply for non-restricted recreational impoundments shall be disinfected tertiary recycled water that has been subjected to conventional treatment. Section 60305 also provides that disinfected tertiary recycled water that has not received conventional treatment may be used for non-restricted recreational impoundments provided that the recycled water is monitored for the presence of pathogenic organisms in accordance with certain conditions. The degree of treatment specified represents an approximately 5-log reduction in the virus content of the water. The California Department of Health Services (CDHS) has determined that this degree of virus removal is necessary to protect the health of people using these impoundments for water contact recreation. The CDHS has developed wastewater disinfection guidelines ("Wastewater Disinfection for Health Protection", CDHS, Sanitary Engineering Branch, February 1987) for discharges of wastewater to surface waters where water contact recreation (REC-1) is a beneficial use. The disinfection guidelines recommend the same treatment requirements for wastewater discharges to REC-1 waters as those stipulated in Title 22 for supply of recycled water to non-restricted recreational impoundments, since the public health risks under both scenarios are analogous. The disinfection guidelines are based on sound science and are widely used as guidance to assure public health and beneficial use protection.

The Santa Ana River is not a "non-restricted recreational impoundment," nor is "disinfected tertiary recycled water" (as defined in the Water Recycling Criteria) being used as a supply source for the River. However, except during major storms, most of the flow in the River is composed of treated municipal wastewater discharges. The River is used for water contact recreation and, accordingly, is designated REC-1 (water contact beneficial use). People recreating in the River face an exposure similar to those coming in contact with recycled water in an impoundment. Therefore, to protect the water contact recreation beneficial use and to prevent nuisance and health risk, it is necessary and appropriate to require the same degree of treatment for wastewater discharges to the River as would be required for the use of recycled water in a non-restricted recreational impoundment. Thus, this Order specifies requirements based on tertiary or equivalent treatment.

The discharger proposes to discharge secondary treated and disinfected wastewater to Chino Creek and thence Reach 3 of Santa Ana River when 20:1 dilution of the wastewater can be provided by the natural flow of the Creek at the point of discharge. The CDHS has determined that public health and water contact recreation beneficial uses will be protected provided that at least 20:1 dilution of secondary treated and disinfected wastewater by natural receiving waters is achieved (Wastewater Disinfection for Health Protection", CDHS, Sanitary Engineering Branch, February 1987). Based on best professional judgment, the proposed Order implements these public health protection guidelines.

The Basin Plan includes wasteload allocations for total dissolved solids (TDS) and total inorganic nitrogen[4] (TIN) for the upper Santa Ana River dischargers, including IEUA. These allocations were established to assure compliance with the TDS and TIN objectives for the Santa Ana River. The wasteload allocations are implemented through effluent limitations specified in waste discharge requirements, including Order No. 99-36, NPDES No. CA8000073, for IEUA's discharges from CCWRF. Revised wasteload allocations for IEUA discharges from its treatment facilities, including CCWRF, have been adopted by the Board through Basin Plan Amendment Resolution No. R8-2004-0001. This amendment is the result of the recently concluded watershed-wide Nitrogen/TDS study conducted by a consortium of agencies known as the Nitrogen/TDS Task Force. This Task Force includes water supply and wastewater management agencies such as IEUA, the Santa Ana Watershed Project Authority (SAWPA), and the Regional Board. Upon approval of the Basin Plan amendment by the State Water Resources Control Board, Office of Administrative Law and US EPA Region IX, this Order will be reopened to incorporate revised wasteload allocations specified in the Basin Plan Amendment. For discharges from CCWRF, compliance with the established TDS and TIN objectives for Chino Creek, 550 mg/l and 8 mg/l, respectively, will be required as specified in the current 1995 Basin Plan.

The proposed Order specifies numeric and narrative limits for the control of toxic substances. These limits are based on the following:

1. 1995 Basin Plan;
2. Policy for Implementation of Toxics Standards for Inland Surface Waters, Enclosed Bays, and Estuaries of California adopted on March 2, 2000 by the State Water Resources Control Board (SIP);
3. Code of Federal Regulations (40 CFR Parts 122-124, 129, 131, 136, 141-142 and 503);
4. Technical Support Document for Water Quality-based Toxics Control (EPA/505/2-90-001, March 1991);
5. Water Quality Standards; Establishment of Numeric Criteria for Priority Toxic Pollutants for the State of California, promulgated in May 18, 2000 by the U.S. EPA, (hereinafter, "CTR");
6. Santa Ana River Use-Attainability Analysis, Volume 10, Calculation of Total-to-Dissolved Metal Ratios to Translate Site-Specific Water Quality Objectives into NPDES Effluent Limits", Risk Sciences (May, 1994);
7. Water Quality Criterion for the Protection of Human Health: Methylmercury – EPA-823-R-01-001, January 2001.

---

4 *Total Inorganic Nitrogen (TIN) is the sum of the nitrate-N, nitrite-N, and ammonia-N.*

The State Water Resources Control Board adopted the Policy for Implementation of Toxics Standards for Inland Surface Waters, Enclosed Bays, and Estuaries of California (SIP) on March 2, 2000. The SIP establishes implementation provisions for priority pollutant criteria promulgated by the U.S. Environmental Protection Agency (U.S. EPA) through the National Toxics Rule (NTR), which was promulgated on December 22, 1992 and amended on May 4, 1995, and through the California Toxics Rule (CTR), which was promulgated on May 18, 2000.

This Order implements federal regulations specified in 40 CFR 122, 123, 124, 125, and 129 which pertain to all publicly-owned treatment works (POTW) with average design flows exceeding 1 mgd.

This Order includes requirements for the implementation of an effective pretreatment program pursuant to Section 307 of the Federal Clean Water Act Parts 35 and 403 of Title 40, Code of Federal Regulations (40 CFR 35 and 40 CFR 403) and Section 2233, Title 23, California Code of Regulations. IEUA's CCWRF was designed to treat 11.4 mgd of wastewater. An effective pretreatment program is required for those publicly owned treatment works that have a design capacity at or greater than 5 million gallons per day, or are receiving flows and pollutants from industrial users that pass through or interfere with the operation of the POTW or are otherwise subject to pretreatment standards.

D. PROPOSED EFFLUENT LIMITATIONS:

The limitations in this Order are intended to control pollutants in the waste discharge, maintain water quality, and protect the beneficial uses of the affected receiving waters. Revisions to water quality objectives or to beneficial uses designated in the Basin Plan may occur in the course of periodic review and update of the Plan. These waste discharge requirements will be re-evaluated and may be revised to accommodate any of these changes.

In determining compliance with the effluent limitations in this Order, no mixing zone allowance is provided. No mixing zone allowance is proposed since there are essentially no natural receiving waters at the points of discharge.

Biochemical Oxygen Demand (BOD) and Suspended Solids

The proposed Biochemical Oxygen Demand$_5$ (BOD_5) and suspended solids limits are based on values that are achievable with tertiary treatment. These limits are intended to ensure that only adequately oxidized wastewater is discharged.

Total Dissolved Solids (TDS)/Inorganic Minerals

The proposed TDS limitation (550 mg/l) for the discharge to Reach 2 of Chino Creek and Reach 3 of Santa Ana River is based on the water quality objective established in the Basin Plan for Reach 1 of Chino Creek, which is downstream of Reach 2 of the Creek. The Order also includes a TDS limit based on the quality of the water supplied to the service area plus a reasonable use increment. The more restrictive of the two TDS limits applies to the discharges. Review of

monitoring data of mineral constituents indicated that the effluent concentrations of these minerals, boron, chloride, fluoride, sodium, sulfate, and total hardness, are in consistent compliance with water quality objectives for the Santa Ana River, Reach 3, therefore, no mineral limits are specified in this Order.

Total Inorganic Nitrogen (Nitrate, Nitrite, Ammonia)

High concentrations of nitrates in domestic water can be toxic to human life. To protect human health, the concentrations of nitrates in lakes, streams, and groundwater, which are sources of drinking water, must not exceed 45 milligrams per liter (mg/l) (as NO_3) or 10 mg/l (as N) as a result of controllable water quality factors.

On November 15, 1991, the Regional Board adopted a revised wasteload allocation for total inorganic nitrogen in Publicly Owned Treatment Works (POTW) discharges to the Santa Ana River and its tributaries and to groundwater in the Upper Santa Ana River Basin. The revised wasteload allocation for IEUA CCWRF specifies a limit of 13.0 mg/l for flows up to 6.7 million gallons per day (mgd); for flows in excess of 6.7 mgd, the TIN limit is 10 mg/l. As discussed above, this wasteload allocation has been revised and submitted for requisite approvals. To assure protection of Chino Creek, this Order specifies a limit of 8 mg/l TIN for CCWRF discharges.

Un-ionized ammonia exists in equilibrium with ammonium $(NH_4)^+$ and hydroxide $(OH)^-$ ions in water. The concentrations of ammonium and hydroxide ions change with temperature, pH and salinity of the water. Total ammonia nitrogen wasteload allocations are specified in the Basin Plan in order to meet the Santa Ana River site-specific un-ionized ammonia objective. In accordance with the Basin Plan, this Order specifies an average monthly effluent limitation of 4.5 mg/l for total ammonia-nitrogen.

Trace Constituent Limitations

The U.S. EPA has identified 126 priority pollutants, including metals and organic chemicals, and has promulgated water quality objectives for many of these substances in the California Toxics Rule and National Toxics Rule. The State Board's Policy for Implementation of Toxics Standards for Inland Surface Waters, Enclosed Bays and Estuaries of California (SIP) specifies the procedures that are to be used in implementing these objectives in waste discharge requirements. Numeric effluent limitations must be specified for those priority pollutants that are determined to have the reasonable potential to cause or contribute to a violation of the applicable objectives.

To determine reasonable potential for pollutants to exceed water quality objectives, Board staff used the procedures outlined in the SIP. Influent and effluent monitoring data for CCWRF were used in this analysis. The maximum concentrations for individual constituents that were detected in the effluent or upstream receiving water, whichever values were higher, were compared to the criteria values specified in the California Toxics Rule (CTR). When monitoring data show that individual constituents were not detected, the lowest detection level (DL) is used to make such comparisons. When the detected concentrations or the lowest DL were less than the criteria, it was concluded that the effluent posed no reasonable potential to exceed water quality objectives

for that constituent. For all priority pollutants for which there was no demonstrated reasonable potential to cause a water quality objective to be exceeded, no numeric limitations are specified in this Order. In situations where the criteria value and all available effluent data were below detection levels and receiving water data are unavailable, staff was unable to determine if there was a reasonable potential to cause a water quality objective to be exceeded. Therefore, effluent limits for those constituents were also not included in this Order. However, the discharger is required to monitor for these pollutants on a quarterly basis at detection levels that are specified in the Order. If warranted by the results of this monitoring, this Order will be reopened to incorporate appropriate effluent limits.

Using CCWRF data, the reasonable potential analysis showed that chromium (VI), cyanide, selenium, and bis (2-ethylhexyl) phthalate have the reasonable potential to exceed water quality criteria in the CTR. Following the CTR and the SIP procedures, effluent discharge limitations were developed for these pollutants. Federal regulations require that the effluent limits for metals be expressed as the total recoverable form. To comply with this requirement, the dissolved criteria are translated into total recoverable effluent limits using ratios of the total recoverable metals to dissolved metals (t/d) concentrations. The SIP stipulates that in the absence of site-specific information, the conversion factors cited in the CTR should be used as the t/d translators. No dilution credit is used in the calculation.

In its January 8, 2001, guidance document, the US EPA finds that a fish tissue residue water quality criterion for methylmercury (Water Quality Criterion for the Protection of Human Health: Methylmercury - EPA-823-R-01-001, January 2001) is more appropriate than a water column based water quality criterion. The EPA further states that a fish tissue residue water quality criterion is more closely tied to the Clean Water Act goal of protecting the public health because it is based directly on the human exposure route for methylmercury. Consequently, this Order specifies a receiving water limitation in fish tissue of 0.3 mg methylmercury/kg. This Order also requires the discharger to conduct monitoring of fish tissue in the Santa Ana River to identify any evidence of mercury bioaccumulation, as would be indicated by the detection of methylmercury. The Order includes a reopening provision that enables the Regional Board to revise the Order to include a mercury effluent limitation once a scientifically defensible method of translating methylmercury concentrations in fish tissue to mercury in the effluent is derived.

Compliance Time Schedule for Free Cyanide

As previously noted, current monitoring data for free cyanide indicate reasonable potential to exceed water quality criteria in the CTR. Consequently, effluent limitations for free cyanide are established in this Order. Section 2.1 of the SIP allows the Regional Board to include a compliance schedule and interim limits in an NPDES permit if the discharger submits justification as specified in the SIP. On July 1, 2004, IEUA requested and submitted documentation for a compliance schedule to comply with the free cyanide limit in the Order.

Prior to December 2003, IEUA had conducted analysis for total cyanide, rather than free cyanide, in samples collected from all IEUA treatment plants, in accordance with then applicable waste discharge requirements. IEUA began analysis for free cyanide in December 2003. The data indicate the likelihood that free cyanide is formed during the disinfection process at CCWRF (and RP-5). IEUA has initiated a free cyanide investigation that will address all

treatment plants (RP-1, RP-4, RP-5 and CCWRF). The first phase of the investigation will focus on CCWRF. Data collection is expected to be complete by December 31, 2004. Based on analysis of these data, the need for and type of remedial actions will be identified. It is anticipated that compliance will be achieved as soon as possible but no later than December 31, 2005. This schedule will be reconsidered and revised if it is demonstrated that additional time is required to implement appropriate control measures.

The compliance schedule included in this Order is based on the shortest practicable time required to achieve compliance but exceeds one year. Consequently, this Order includes interim and final limits and interim compliance steps, as well as a compliance schedule for free cyanide. The maximum detected effluent concentration for free cyanide is set as the interim average monthly effluent limit for free cyanide. This is in accordance with SIP Section 2.2.1, which stipulates that, "Numeric interim limitations for the pollutant must be based on current treatment facility performance or on existing permit limitations, whichever is more stringent." (There is no limit on free cyanide in the prior Order No. 99-36 and interim limits must be based on treatment performance.)

Toxicity Limitations

This Order requires the discharger to conduct chronic[5] toxicity testing of the effluent on a monthly basis. The Order also requires the discharger to conduct an Initial Investigation Toxicity Reduction Evaluation (IITRE[6]) program when either the two-month median of toxicity test results exceeds 1 TUc or any single test exceeds 1.7 TUc for survival endpoint. Based on the results of this investigation program and at the discretion of the Executive Officer, a more rigorous Toxicity Reduction Evaluation/Toxicity Identification Evaluation (TRE/TIE) may be required. A re-opener provision is included in the Order to incorporate a chronic toxicity effluent limitation if warranted by the toxicity test results.

Compliance

Many of the objectives specified in the CTR, and the effluent limits that implement them, are at extremely low concentrations. In several cases, these concentrations are below current laboratory detection values. As such, it is necessary to require laboratory analyses to be performed to the lowest possible concentrations. The Policy for Implementation of Toxics Standards for Inland Surface Waters, Enclosed Bays, and Estuaries of California (SIP) includes a list of priority pollutants with their respective Minimum Levels (ML)[7] on which "reported Minimum Levels" (i.e., quantitation values for the sample) shall be based. The SIP recognizes that the "reported ML" may be orders of magnitude different than the listed MLs depending on the amount of

---

5 *The chronic test method for the water flea "Ceriodaphnia dubia" also measures acute toxicity.*

6 *An IITRE is the initial stage of investigation conducted prior to implementing a complete toxicity reduction evaluation (TRE) study. A TRE is a stepwise process for identifying the agent(s) and/or source(s) of toxicity in a given effluent.*

7 *Minimum Level is the concentration at which the entire analytical system must give a recognizable signal and acceptable calibration point. The ML is the concentration in a sample that is equivalent to the concentration of the lowest calibration standard analyzed by a specific analytical procedure, assuming that all the method specified sample weights, volumes, and processing steps have been followed.*

dilution/concentration required for sample preparation, and the amount of dilution necessary to address matrix interference. Unfortunately, the SIP lacks guidance for the development of appropriate "reported MLs".

The Regional Board has required discharges to meet Minimum Levels for all priority pollutants and practical quantitation levels (PQLs)[8] for non-priority pollutants. The PQLs for wastewater were developed based on the following:

1. A survey of laboratories in the Southern California area and a review of method detection levels (MDLs) in accordance with 40 CFR 136 for a wastewater matrix reported by local laboratories;

2. The consensus PQLs determined during the meeting of major Southern California laboratories with the Regional Board staff on January 28, 1992. The consensus PQLs are believed to represent the lowest quantitation levels that can be achieved by most laboratories in Southern California based on proven laboratory performance and the reasonable application of best available analytical technology for most toxic substances;

3. The report "A Study To Determine The Practical Quantitation Levels (PQL) For Selected Water Chemistry Parameters Analyzed by Commercial Laboratories Operating In The Santa Ana River Watershed" (Risk Sciences, 1993).

The discharger is required to meet the minimum levels in Attachment A of the Monitoring and Reporting Program (M&RP) No. R8-2004-0020 for those priority pollutants with effluent limitations in this Order. The discharger shall select and use the appropriate ML value. When there is more than one ML value for a given substance, the discharger shall select the ML value which is below the calculated effluent limitation, and use its associated analytical method, listed in Attachment A of the M&RP. If no ML value is below the effluent limitation, then the Regional Board will select the lowest ML value and its associated analytical method. In cases where the discharger believes that the sample matrix justifies a different "reported ML", the discharger is required to demonstrate to the satisfaction of the Regional Board's Executive Officer the appropriateness of the alternative "reported ML" for that sample matrix.

All analytical data are required to be submitted with the corresponding MDLs and MLs. Sample results shall be reported as "DNQ" (Detected, but Not Quantified) if the results are less than the reported ML, but greater than the MDL. Sample results shall be reported as "ND" (Not Detected) if the results are less than the MDL.

The discharger shall be deemed out of compliance with an effluent concentration limit if the concentration of the effluent sample is greater than the effluent limit and greater than or equal to the "reported ML." The discharger shall not be deemed out of compliance for any sample result reported as DNQ or ND. However, the discharger is required to conduct a Pollutant

---

8 *PQL is the lowest concentration of a substance that can be determined within ± 20 percent of the true concentration by 75 percent of the analytical laboratories tested in a performance evaluation study. Alternatively, if performance data are not available, the PQL is the method detection limit (MDL) x 5 for carcinogens and MDL x 10 for noncarcinogens.*

Minimization Program, as described in the SIP, if there is an indication that a constituent is present in the effluent above an effluent limitation and either: a sample result is reported as DNQ and the effluent limitation is less than the "reported ML", or a sample result is reported as ND and the effluent limitation is less than the MDL.

E. ANTIDEGRADATION ANALYSIS:

The Regional Board has considered antidegradation pursuant to 40 CFR 131.12 and State Board Resolution No. 68-16. The water quality of the receiving waters is not expected to degrade as a result of this discharge. Neither the constituent concentrations of the discharge nor the mass loading of pollutants associated with the discharge will adversely impact water quality or affect the beneficial uses of the receiving waters. Therefore, these waste discharge requirements are consistent with federal and state antidegradation policies.

F. WRITTEN COMMENTS:

Interested persons are invited to submit written comments on the proposed discharge limits and the Fact Sheet. Comments should be submitted by July 26, 2004, either in person or by mail to:

Jane Qiu
California Regional Water Quality Control Board
Santa Ana Region
3737 Main Street, Suite 500
Riverside, CA 92501-3348

G. INFORMATION AND COPYING:

Persons wishing further information may write to the above address or call Jane Qiu of the Regional Board at (909) 320-2008. Copies of the application, proposed waste discharge requirements, Fact Sheet, and other documents (other than those which the Executive Officer maintains as confidential) are available at the Regional Board office for inspection and copying between the hours of 9:00 a.m. and 3:00 p.m., Monday through Friday (excluding holidays).

H. REGISTER OF INTERESTED PERSONS:

Any person interested in a particular application or group of applications may leave his name, address, and phone number as part of the file for an application.

I. PUBLIC HEARING:

The Regional Board will hold a public hearing regarding the proposed waste discharge requirements as follows:

DATE:	August 13, 2004
TIME:	9:00 a.m.
PLACE:	Santa Ana City Council Chambers 22 Civic Center Plaza Santa Ana, California

CARBCAN

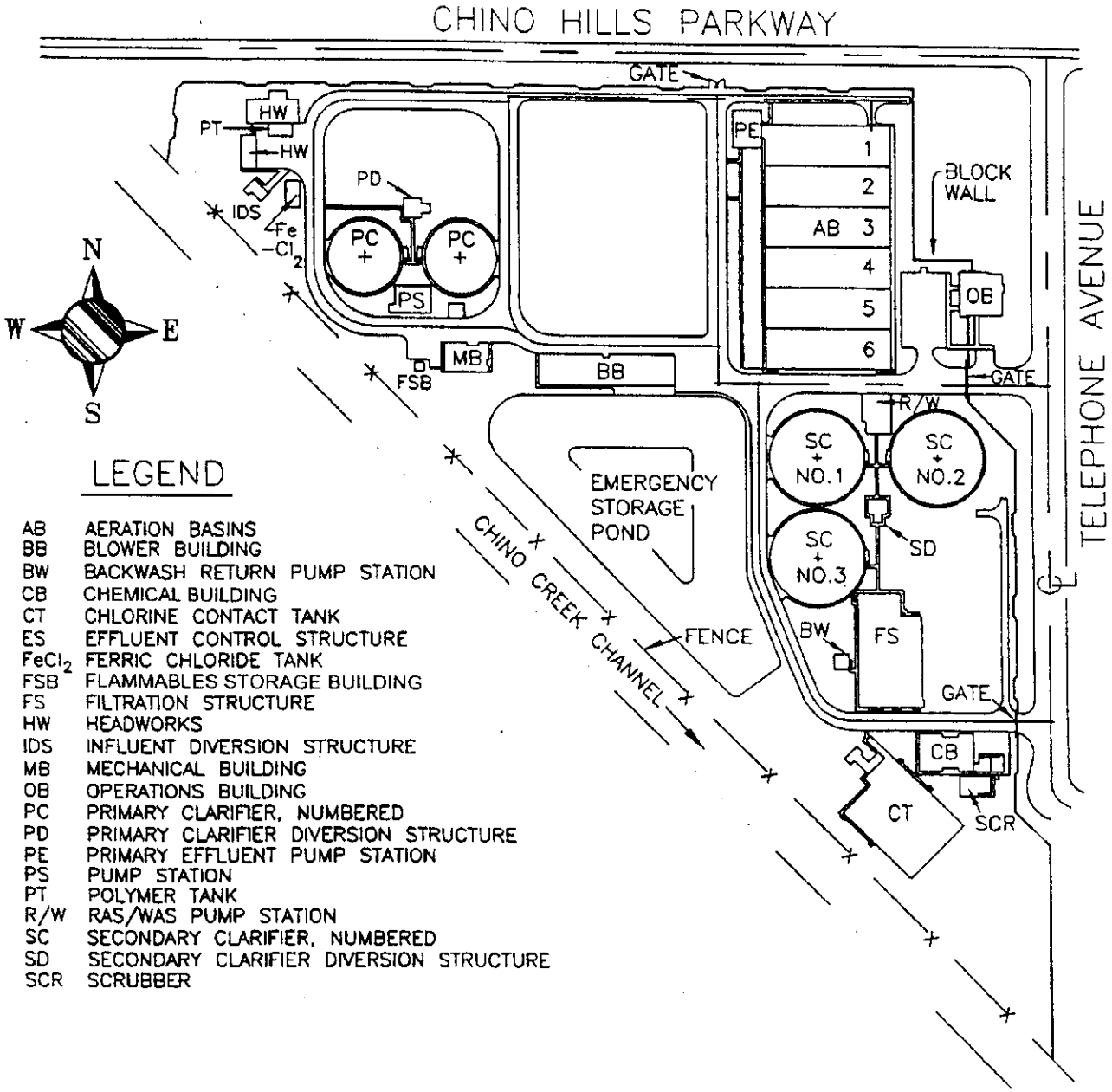

LEGEND

AB	AERATION BASINS
BB	BLOWER BUILDING
BW	BACKWASH RETURN PUMP STATION
CB	CHEMICAL BUILDING
CT	CHLORINE CONTACT TANK
ES	EFFLUENT CONTROL STRUCTURE
$FeCl_2$	FERRIC CHLORIDE TANK
FSB	FLAMMABLES STORAGE BUILDING
FS	FILTRATION STRUCTURE
HW	HEADWORKS
IDS	INFLUENT DIVERSION STRUCTURE
MB	MECHANICAL BUILDING
OB	OPERATIONS BUILDING
PC	PRIMARY CLARIFIER, NUMBERED
PD	PRIMARY CLARIFIER DIVERSION STRUCTURE
PE	PRIMARY EFFLUENT PUMP STATION
PS	PUMP STATION
PT	POLYMER TANK
R/W	RAS/WAS PUMP STATION
SC	SECONDARY CLARIFIER, NUMBERED
SD	SECONDARY CLARIFIER DIVERSION STRUCTURE
SCR	SCRUBBER

CARBON CANYON WATER RECLAMATION PLANT FACILITIES MAP

APPROXIMATE SCALE: 1" = 400'

INLAND EMPIRE UTILITIES AGENCY

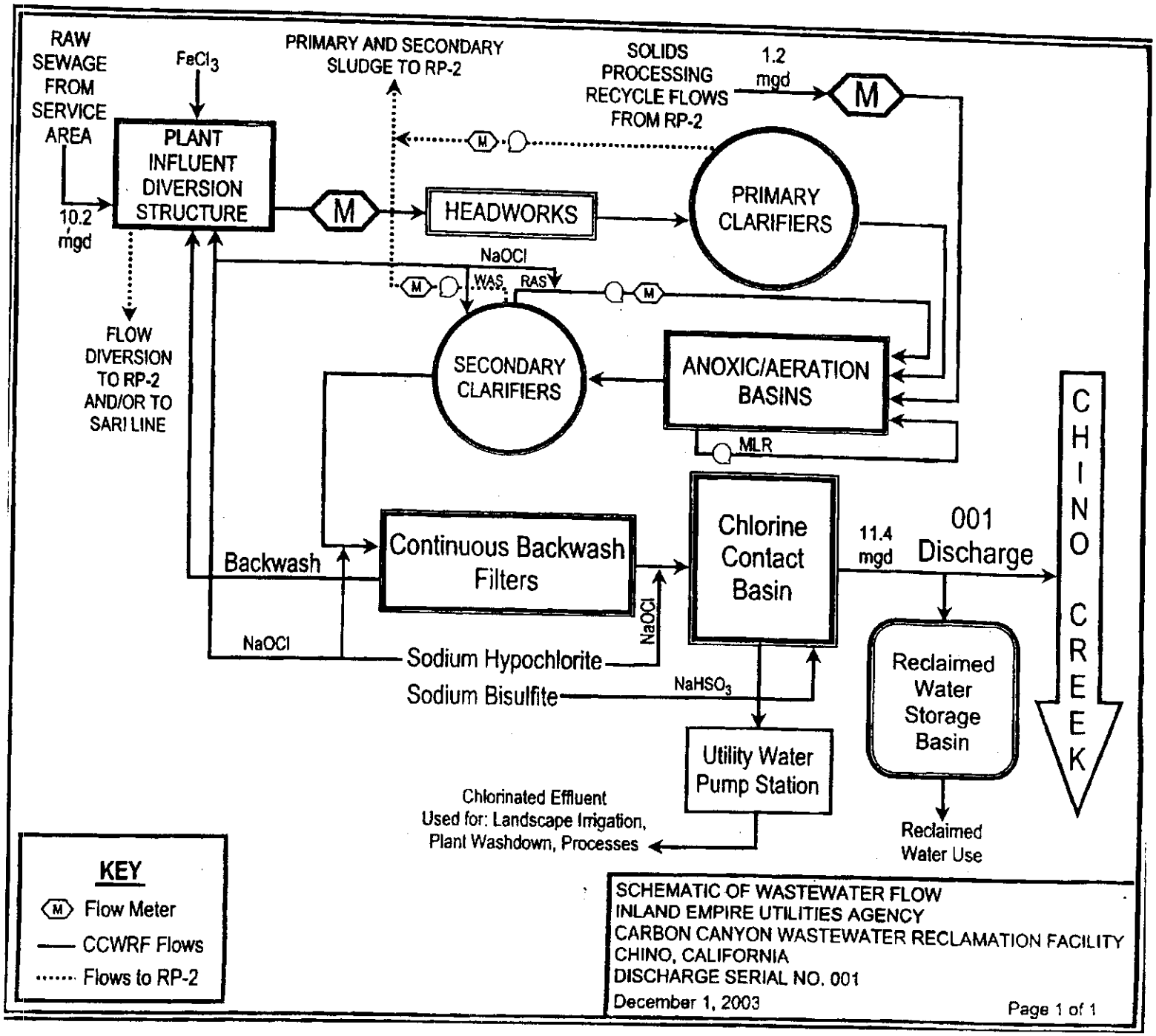
RAW SEWAGE FROM SERVICE AREA
10.2 mgd
FeCl3
PLANT INFLUENT DIVERSION STRUCTURE
FLOW DIVERSION TO RP-2 AND/OR TO SARI LINE
PRIMARY AND SECONDARY SLUDGE TO RP-2
M
HEADWORKS
SOLIDS PROCESSING RECYCLE FLOWS FROM RP-2
1.2 mgd
PRIMARY CLARIFIERS
NaOCl
WAS
RAS
SECONDARY CLARIFIERS
ANOXIC/AERATION BASINS
MLR
Backwash
Continuous Backwash Filters
NaOCl
Sodium Hypochlorite
Sodium Bisulfite
NaHSO3
Chlorine Contact Basin
11.4 mgd
001 Discharge
CHINO CREEK
Reclaimed Water Storage Basin
Reclaimed Water Use
Utility Water Pump Station
Chlorinated Effluent Used for: Landscape Irrigation, Plant Washdown, Processes
KEY
Flow Meter
CCWRF Flows
Flows to RP-2
SCHEMATIC OF WASTEWATER FLOW
INLAND EMPIRE UTILITIES AGENCY
CARBON CANYON WASTEWATER RECLAMATION FACILITY
CHINO, CALIFORNIA
DISCHARGE SERIAL NO. 001
December 1, 2003
Page 1 of 1

California Regional Water Quality Control Board
Santa Ana Region

ORDER NO. R8-2004-0020
NPDES NO. CA8000073

Waste Discharge and Producer/User Water Recycling Requirements

for the

Inland Empire Utilities Agency
Carbon Canyon Water Reclamation Facility
Chino
San Bernardino County

California Regional Water Quality Control Board
Santa Ana Region

ORDER N0. R8-2004-0020
NPDES NO. CA8000073

TABLE OF CONTENTS

FINDINGS 1-6

A. DISCHARGE SPECIFICATIONS 7-11

1. Effluent Limitations 7-9

a. Biological / Suspended Solids 7

b. Chlorine Residual/Ammonia 8

c. Total Dissolved Solids 8

d. Total Inorganic Nitrogen 8

e. Trace Constituent Limitations 8-9

2-6. Narrative Discharge Limitations 9-11

B. TOXICITY REQUIREMENTS 11-12

C. RECEIVING WATER LIMITATIONS 12-13

D. BIOSOLIDS REQUIREMENTS 13-14

E. WATER RECYCLING REQUIREMENTS 14-15

F. PRETREATMENT REQUIREMENTS 15-17

G. COMPLIANCE DETERMINATION 17-20

H. REQUIRED NOTICES AND REPORTS 21-24

I. PENALTIES 25

J. PROVISIONS 25-30

K. PERMIT RE-OPENING, REVISION, REVOCATION, AND RE-ISSUANCE 30-31

California Regional Water Quality Control Board
Santa Ana Region

ORDER NO. R8-2004-0020
NPDES NO. CA 8000073

Waste Discharge and Producer/User Water Reclamation Requirements

for the
Inland Empire Utilities Agency
Carbon Canyon Wastewater Reclamation Facility
Chino
San Bernardino County

The California Regional Water Quality Control Board, Santa Ana Region (hereinafter, Regional Board), finds that:

1. On December 26, 2003, the Inland Empire Utilities Agency (hereinafter discharger, or IEUA) submitted a Report of Waste Discharge (ROWD) and a National Pollutant Discharge Elimination System (NPDES) permit application for the discharge and/or recycling of tertiary treated wastewater at its existing Carbon Canyon Water Reclamation Facility (CCWRF). The discharges from the facility are currently regulated under Order No. 99-36, NPDES No. CA 8000073. Order No. 99-36 expired on June 1, 2004 but was administratively extended.

2. The facility is located at the southwest corner of the intersection of Chino Hills Parkway and Telephone Avenue, at 14950 Telephone Avenue, City of Chino, San Bernardino County.

3. The facility accepts domestic, commercial, and industrial wastewater flows up to 11.4 million gallons per day (mgd) from the Cities of Chino, Chino Hills, Montclair, and Upland. All flows from the City of Montclair can be diverted to the discharger's Regional Plant No. 1[1] (RP-1) facility in Ontario. Wastewater flows from the City of Upland, originating west of Mountain Avenue, can be diverted to the discharger's Regional Plant No. 5[2] (RP-5) facility. A portion of the raw sewage from the Cities of Chino and Chino Hills can also be diverted either to this facility or to RP-5. Wastewater flows to CCWRF have reached the design capacity of 11.4 mgd. When influent flow to CCWRF exceeds the design capacity of the facility, IEUA will divert the excess influent flow to RP-5 for treatment. Therefore, no expansion is necessary for CCWRF.

TENTATIVE

---

1 *Regional Plant No. 1 is a municipal wastewater treatment plant located at 2450 East Philadelphia Avenue in the Ontario area of San Bernardino County.*

2 *Regional Plant No. 5 is a municipal wastewater treatment plant located approximately 1.35 miles southeast of the Carbon Canyon Water Reclamation Facility.*

4. The wastewater treatment consists of the following:

   a. Preliminary treatment: bar screens and grit chambers,
   b. Primary treatment: primary clarification and primary sludge pumping,
   c. Secondary treatment: activated sludge process, secondary clarification, sludge recycling, and sludge wasting, and
   d. Tertiary treatment: coagulation, filtration, and chlorination/dechlorination.

5. Sludge and solids at CCWRF are pumped to and treated at the discharger's RP-2 facility at a flow rate of about 1.2 mgd. CCWRF is designed to transfer and treat the recycled flow from RP-2. Solids treatment includes gravity thickeners and dissolved air flotation thickeners, anaerobic digestion, digester gas utilization, and belt press dewatering. Dewatered sludge is hauled away for offsite disposal. The RP-2 solids treatment is regulated under waste discharge requirements Order No. R8-2003-0003, issued to IEUA's RP-5 treatment plant.

6. The facility treats approximately 11.4 million gallons per day (mgd) of raw sewage and discharges approximately 9.7 mgd of tertiary treated wastewater into Outfall 001. Outfall No. 001 is located at latitude 33°58'47"N and longitude 117°41'39"W. The outfall discharges to Reach 2 of Chino Creek.

7. About 0.7 mgd of the treated wastewater is used for landscape irrigation at various sites and about 0.9 mgd is used for on-site utilities water usage.

8. A revised Water Quality Control Plan (Basin Plan) became effective on January 24, 1995. The Basin Plan contains beneficial uses and water quality objectives for waters in the Santa Ana Region.

9. The discharge is to Reach 2 of Chino Creek, which is tributary to Reach 1 of Chino Creek and thence Reach 3 of the Santa Ana River. The beneficial uses of these water bodies include:

   a. Agricultural supply,
   b. Groundwater recharge,
   c. Water contact recreation,
   d. Non-contact water recreation,
   e. Warm freshwater habitat,
   f. Limited Warm Freshwater Habitat,
   g. Wildlife habitat, and
   h. Rare, Threatened or Endangered Species.

10. The discharge point overlies the Chino III Groundwater Subbasin, the beneficial uses of which include:

    a. Municipal and domestic supply,
    b. Agricultural supply,
    c. Industrial process supply, and
    d. Industrial service supply.

11. The requirements contained in this Order are necessary to implement the Basin Plan.

12. The Basin Plan includes wasteload allocations for total dissolved solids (TDS) and total inorganic nitrogen[3] (TIN) for the upper Santa Ana River dischargers, including IEUA. These allocations were established to assure compliance with the TDS and TIN objectives for the Santa Ana River. The wasteload allocations are implemented through effluent limitations specified in waste discharge requirements, including this Order for IEUA's discharges from CCWRF. Revisions to these wasteload allocations have been approved by the Regional Board and forwarded to other agencies for requisite review and approval. For discharges from CCWRF, compliance with the established TDS and TIN objectives for Reach 1 of Chino Creek (550 mg/l and 8 mg/l, respectively) in the 1995 Basin Plan will be required.

13. On January 22, 2004, the Regional Board adopted Basin Plan amendments recommended by the Nitrogen/TDS Task Force. The management and regulation of nitrogen and TDS in the Santa Ana Region, including the Chino Basin, will be materially affected by the Basin Plan amendments, when and if fully approved. The amendments include revised groundwater subbasin boundaries, revised nitrogen and TDS groundwater quality objectives, and revised wasteload allocations. This Order contains re-opener clauses to allow the Regional Board to consider revision of this Order, as necessary, in response to any approved amendments.

14. Article 3, Section 60305 of Title 22, Chapter 3, "Reclamation Criteria" of the California Code of Regulations specifies that recycled water used as a source supply for nonrestricted recreational impoundments shall be at all times an adequately disinfected, oxidized, coagulated, clarified, filtered wastewater (tertiary treated). The degree of treatment specified represents an approximately 5-log reduction in the virus content of the water. The California Department of Health Services (CDHS) has determined that this degree of virus removal is necessary to protect the health of people using these impoundments for water contact recreation.

---

[3] *Total Inorganic Nitrogen (TIN) is the sum of the nitrate-N, nitrite-N and ammonia-N.*

15. The CDHS has developed wastewater disinfection guidelines ("Wastewater Disinfection for Health Protection", Department of Health Services, Sanitary Engineering Branch, February 1987) for discharges of wastewater to surface waters where water contact recreation (REC-1) is a beneficial use. The disinfection guidelines recommend the same treatment requirements for wastewater discharges to REC-1 waters as those stipulated in Title 22 for supply of recycled water to nonrestricted recreational impoundments, since the public health risks under both scenarios are analogous. The disinfection guidelines are based on sound science and are widely used as guidance to assure public health and beneficial use protection.

16. The Santa Ana River and Chino Creek are not "nonrestricted recreational impoundments," nor is "recycled water", as defined in the Reclamation Criteria, being used as a supply source for the River or Creek. However, except during major storms, most of the flow in the River and Creek is composed of treated municipal wastewater discharges. The River and Creek are used for water contact recreation and, accordingly, are designated REC-1 (water contact beneficial use). People recreating in the River or Creek face an exposure similar to those coming in contact with recycled water in an impoundment. Therefore, to protect the water contact recreation beneficial use and to prevent nuisance and health risk, it is necessary and appropriate to require the same degree of treatment for wastewater discharges to the River and Creek as would be required for the use of recycled water in a nonrestricted recreational impoundment.

17. Section 13523 of the California Water Code provides that a regional board, after consulting with and receiving the recommendations from the CDHS and any party who has requested in writing to be consulted, and after any necessary hearing, shall prescribe water reclamation requirements for water which is used or proposed to be used as recycled water, if, in the judgment of the Board, such requirements are necessary to protect the public health, safety, or welfare. Section 13523 further provides that such requirements shall include, or be in conformance with, the statewide uniform water recycling criteria established by the CDHS pursuant to California Water Code Section 13521.

18. The use of recycled water for irrigation in parks, golf courses, freeway landscaping, schoolyards, cemeteries, and other landscape or agricultural areas could affect the health, safety, and welfare of the public; therefore, recycling requirements are necessary.

19. The CDHS adopted revised Water Recycling Criteria (Title 22, California Code of Regulations) that became effective on December 2, 2000. This Order implements the revised Criteria for the use of recycled water.

20. All stormwater from the CCWRF site will be channeled into the onsite emergency storage basin with a capacity of 9 million gallons. The accumulated stormwater will be pumped to the headworks for treatment. As there is no direct stormwater runoff from the site into surface waters, no stormwater requirements or monitoring are specified in this Order.

21. As required by the Clean Water Act and regulations adopted thereunder, the chemical specific limitations contained in this Order are designed to prevent a violation of any applicable water quality standard for receiving waters adopted by the Regional Board, the State Board or US EPA. If more stringent applicable water quality standards are approved pursuant to Section 303 of the Clean Water Act, or amendments thereto, the Regional Board will revise and modify this Order in accordance with such more stringent standards.

22. Effluent limitations, national standards of performance, and toxic pretreatment effluent standards established pursuant to Section 208(b), 301, 302, 303(d), 304, 306, and 307 of the Clean Water Act, and amendments thereto, are applicable to the discharge.

23. This Order includes requirements for the implementation of an effective pretreatment program pursuant to Section 307 of the Federal Clean Water Act Parts 35 and 403 of Title 40, Code of Federal Regulations (40 CFR 35 and 40 CFR 403) and Section 2233, Title 23, California Code of Regulations. CCWRF is designed to treat 11.4 mgd of wastewater. An effective pretreatment program is required for those publicly owned treatment works that have a design capacity at or greater than 5 million gallons per day, or are receiving flows and pollutants from industrial users that may pass through or interfere with the operation of the POTW or are otherwise subject to pretreatment standards.

24. On May 18, 2000, the U.S. Environmental Protection Agency issued a final rule establishing Numeric Criteria for Priority Toxic Pollutants necessary to fulfill the requirements of Section 303(c)(2)(B) of the Clean Water Act for the State of California. This rule is commonly referred to as the California Toxics Rule (CTR).

25. Federal Regulations require permits to include limitations for all pollutants that are or may be discharged at a level that will cause, have the reasonable potential to cause, or contribute to an excursion of a water quality standard.

26. On March 2, 2000, the State Water Resources Control Board adopted the Policy for Implementation of Toxics Standards for Inland Surface Waters, Enclosed Bays, and Estuaries of California (SIP). The SIP includes implementation provisions for the CTR. The SIP specifies a methodology to determine if pollutants in the discharge are at a level that will cause, have the reasonable potential to cause, or contribute to an excursion of a water quality standard, and delineates procedures to be used to calculate appropriate limits.

27. This Order implements relevant provisions of the CTR and the SIP. Using CCWRF data, the reasonable potential analysis showed that chromium (VI), cyanide, selenium, and bis (2-ethylhexyl) phthalate have the reasonable potential to exceed water quality criteria in the CTR. Following the CTR and the SIP procedures, effluent discharge limitations were developed for chromium (VI), cyanide, selenium, and bis (2-ethylhexyl) phthalate. Section 2.1 of the SIP provides that a compliance schedule may be established in an NPDES permit based on an existing discharger's request and demonstration that it is infeasible for the discharger to achieve immediate compliance with an effluent limitation based on the CTR

28. On July 1, 2004, IEUA requested that a compliance schedule for free cyanide limitations be included in this Order. IEUA demonstrated that immediate compliance with the proposed effluent limitations for free cyanide is infeasible. Prior to December 2003, IEUA had conducted analysis for total cyanide, rather than free cyanide, in samples collected from all IEUA treatment plants, in accordance with then applicable waste discharge requirements. IEUA began analysis for free cyanide in December 2003. The data indicate the likelihood that free cyanide is formed during the disinfection process at CCWRF. IEUA has initiated a free cyanide investigation that will address all treatment plants (RP-1, RP-4, RP-5 and CCWRF). The first phase of the investigation will focus on CCWRF. Data collection is expected to be complete by December 31, 2004. Based on analysis of these data and review of experience with this problem elsewhere, the need for and type of remedial actions will be identified. It is anticipated that compliance will be achieved as soon as possible but no later than December 31, 2005. This schedule will be reconsidered and revised as appropriate if it is demonstrated that additional time is required to identify and implement appropriate control measures. This Order will be reopened to consider appropriate changes to the compliance schedule if and as necessary based on submission of additional justification.

29. The compliance schedule included in this Order is based on the shortest practicable time required to achieve compliance, but it exceeds one year. Consequently, this Order includes interim and final limits and a schedule for compliance with the final free cyanide limitations. The maximum detected effluent concentration for free cyanide is set as the interim average monthly effluent limits for free cyanide. This is in accordance with SIP Section 2.2.1, which stipulates that "Numeric interim limitations for the pollutant must be based on current treatment facility performance or on existing permit limitations, whichever is more stringent." Since there is no limit on free cyanide in the prior Order No. 99-36, interim limits must be based on treatment performance.

30. This Order requires the discharger to submit by March 31, 2005 a report that proposes a plan and schedule for achieving compliance with the final free cyanide effluent limitations. The discharger is required to implement that plan and schedule upon the Executive Officer's approval. Quarterly progress reports are also required to be submitted.

31. Violation(s) of interim effluent limitations are subject to the same enforcement remedies provided in the Water Code for violation(s) of final effluent limits.

32. In its January 8, 2001, guidance document, the US EPA finds that a fish tissue residue water quality criterion for methylmercury (Water Quality Criterion for the Protection of Human Health: Methylmercury - EPA-823-R-01-001, January 2001) is more appropriate than a water column based water quality criterion. The EPA further states that a fish tissue residue water quality criterion is more closely tied to the Clean Water Act goal of protecting the public health because it is based directly on the human exposure route for methylmercury. Consequently, this Order specifies a receiving water limitation in fish tissue of 0.3 mg methylmercury/kg fish in lieu of limitations for total mercury in the effluent.

33. On February 19, 1993, the USEPA issued a final rule for the use and disposal of sewage sludge, 40 CFR, Part 503. This rule requires that producers of sewage sludge meet certain reporting, handling, and disposal requirements. The State of California has not been delegated the authority to implement this program, therefore, the U.S. Environmental Protection Agency is the implementing agency.

34. In accordance with Water Code Section 13389, the issuance of waste discharge requirements for this discharge is exempt from those provisions of the California Environmental Quality Act contained in Chapter 3 (commencing with Section 21100), Division 13 of the Public Resources Code.

35. The Regional Board has considered antidegradation pursuant to 40 CFR 131.12 and State Board Resolution No. 68-16. The water quality of the receiving waters is not expected to degrade as a result of this discharge. Neither the constituent concentrations of the discharge nor the mass loading of pollutants associated with the discharge will adversely impact water quality or affect the beneficial uses of the receiving waters. Therefore, these waste discharge requirements are consistent with federal and state antidegradation policies.

36. The Regional Board has notified the discharger and other interested agencies and persons of its intent to prescribe waste discharge requirements for the discharge and has provided them with an opportunity to submit their written views and recommendations.

37. The Regional Board, in a public meeting, heard and considered all comments pertaining to the discharge.

IT IS HEREBY ORDERED that the discharger, in order to meet the provisions contained in Division 7 of the California Water Code and regulations adopted thereunder and the provisions of the Clean Water Act and regulations and guidelines adopted thereunder, shall comply with the following:

A. DISCHARGE SPECIFICATIONS:

1. The discharge of wastewater or the use of recycled water containing constituent concentrations in excess of the following limits is prohibited:

   a. Biological/Solids Limitations:

      1) For effluent without a 20:1 dilution (receiving water flow[4]:wastewater flow)

Constituent	Average Weekly (mg/l)	Average Monthly (mg/l)	Average Weekly Emission Rate[5] (lbs/day)	Average Monthly Emission Rate[5] (lbs/day
Biochemical Oxygen Demand$_5$, 20^{0}C	30	20	2852	1902
Suspended Solids	30	20	2852	1902

      2) For effluent with a 20:1 dilution (receiving water flow[4]:wastewater flow)

Constituent	Average Weekly (mg/l)	Average Monthly (mg/l)	Average Weekly Emission Rate (lbs/day)	Average Monthly Emission Rate (lbs/day
Biochemical Oxygen Demand$_5$, 20^{0}C	45	30	4278	2,852
Suspended Solids	45	30	4278	2,852

   b. Chlorine Residual/Ammonia Limitations

Constituent	Instantaneous Maximum (mg/l)	Average Monthly (mg/l)	Average Monthly Emission Rate (lbs/day)
Ammonia-Nitrogen	---	4.5	428
Total Chlorine Residual[6]	0.1	---	---

---

4 *Exclusive of discharges to surface water from upstream publicly owned treatment works.*

5 *Mass emission rates shown in this and all other tables in this Order are based on 11.4 mgd flow.*

6 *Applies to surface water discharges. See Section G.4. Compliance Determination.*

c. TDS Limitations: For Discharge Specifications A. 1.c.(1) and 1.c.(2), the lower of the two total dissolved solids limit is the limit.

(1) The 12-month average[7] total dissolved solids concentration shall not exceed 550 mg/l and the 12-month average mass emission rate shall not exceed 52,292 lbs/day[8], and

(2) The 12-month average total dissolved solids concentration shall not exceed the 12-month average total dissolved solids concentration in the water supply by more than 250 mg/l[9].

d. Total Inorganic Nitrogen (TIN) Limitations[10]: The 12-month average TIN concentration shall not exceed 8 mg/l. The 12-month average TIN mass emission rate shall not exceed 761 lbs per day[11].

e. Trace Constituent Limitations:

Constituent	Maximum Daily Concentration Limit (µg/l)	Average Monthly Concentration Limit (µg/l)	Maximum Daily Mass Emission Rate[5] (lbs/day)	Average Monthly Mass Emission Rate[5] (lbs /day)
Final Limit effective August 13, 2004				
Total Recoverable Chromium VI[12]	16.3	8.2	1.55	0.78
Total Recoverable Selenium	8.2	4.1	0.78	0.39
Bis(2-ethylhexyl) phthalate	11.8	5.9	1.12	0.56
Interim Limit effective from August 13, 2004 through December 31, 2005[13]				
Free Cyanide	8.5	8	0.81	0.76
Final Limit effective January 1, 2006				
Free Cyanide	8.5	4.3	0.81	0.41

7 *See section G.3. Compliance Determination.*
8 *Calculated from 11.4 mgd x 8.34 x 550 mg/l.*
9 *See Section G.5. Compliance Determination.*
10 *See Section G.6. Compliance Determination.*
11 *Calculated from 11.4 mgd x 8.34 x 8 mg/l.*
12 *Total hardness used in calculating metal limits is 144 mg/l, based on the median of CCWRF effluent flow data from January 2000 through December 2003.*
13 *See Section H. 10.Required Notices and Reports; Section K.9. Permit Re-opening, Revisions, Revocation and Re-issuance; and J. 27. Provisions*

2. The discharge of wastewater or use of recycled water shall at all times be a filtered and subsequently disinfected wastewater that meets the following criteria:

   a. Filtered wastewater means an oxidized wastewater that meets either (1) or (2), below:

      1) Has been coagulated and passed through natural undisturbed soils or a bed of filter media pursuant to the following:

         a) At a rate that does not exceed 5 gallons per minute per square foot of surface area in mono, dual or mixed media gravity, upflow or pressure filtration systems, or does not exceed 2 gallons per minute per square foot of surface area in traveling bridge automatic backwash filters, based on peak dry weather design flow[14]; and

         b) The turbidity of the filtered wastewater does not exceed any of the following:

            i. An average of 2 Nephelometric Turbidity Unit (NTU) within a 24-hour period;

            ii. 5 NTU more than 5 percent of the time within a 24-hour period; and

            iii. 10 NTU at any time[15].

      2) Has been passed through a microfiltration, ultrafiltration, nanofiltration, or reverse osmosis membrane so that the turbidity of the filtered wastewater does not exceed any of the following:

         a) 0.2 NTU more than 5 percent of the time within a 24-hour period; and

         b) 0.5 NTU at any time.

   b. Disinfected tertiary wastewater shall mean a filtered wastewater that has been disinfected and meets the following criteria:

      1) The filtered wastewater has been disinfected by either:

---

14 *Filter rates are applicable only to the use of recycled water and not to surface water discharges.*

15 *See Section G.7. Compliance Determination.*

a) A chlorine disinfection process following filtration that provides a CT (the product of total chlorine residual and modal contact time measured at the same point) value of not less than 450 milligram-minutes per liter at all times with a modal contact time of at least 90 minutes[16], based on peak dry weather design flow[17]; or

b) A disinfection process that, when combined with the filtration process, demonstrates[18] inactivation and/or removal of 99.999 percent of the plaque-forming units of F-specific bacteriophage MS-2[19], or polio virus in the wastewater. A virus that is at least as resistant to disinfection as polio virus may be used for purposes of the demonstration.

2) The average weekly concentration of total coliform bacteria measured in the disinfected effluent shall not exceed an MPN of 2.2 per 100 milliliters. The average weekly concentration shall be evaluated using the median of the bacteriological results of the last seven days[20].

3) The number of total coliform bacteria shall not exceed an MPN of 23 per 100 milliliters in more than one sample in any calendar month.

4) The number of total coliform bacteria shall not exceed an MPN of 240 per 100 milliliters in any sample.

c. A coagulated wastewater shall be an oxidized wastewater in which colloidal and finely divided suspended matter have been destabilized and agglomerated upstream from a filter by the addition of suitable floc-forming chemicals.

d. An oxidized wastewater shall be wastewater in which the organic matter has been stabilized, is non-putrescible, and contains dissolved oxygen.

3. The monthly average biochemical oxygen demand and suspended solids concentrations of the discharge shall not be greater than fifteen percent (15%) of the monthly average influent concentrations.

---

16 *The modal contact time requirement and the CT requirement are applicable only to the use of recycled water and not to surface water discharges.*

17 *"Peak Dry Weather Flow" means the arithmetic mean of the maximum peak flow rates sustained over some period of time (for example three hours) during the maximum 24-hour dry weather period. Dry weather period is defined as period of little or no rainfall.*

18 *Meeting the discharge limits in A.2.b.(2),(3),and (4) shall constitute the demonstration required by this sub-paragraph.*

19 *F-Specific bacteriophage MS-2 means a strain of a specific type of virus that infects coliform bacteria that is traceable to the American Type Culture Collection (ATCC) 15597B1) and is grown on lawns of E. coli (ATCC 15597).*

20 *See Section G.8. Compliance Determination.*

4. The discharge of any substances in concentrations toxic to animal or plant life in the affected receiving water is prohibited.

5. There shall be no visible oil and grease in the discharge.

6. The pH of the discharge shall be within 6.5 and 8.5 pH[21].

B. TOXICITY REQUIREMENTS:

1. This Order contains no numeric limitation for toxicity. However, the discharger shall conduct chronic toxicity monitoring as specified in Monitoring and Reporting Program (M&RP) No. R8-2004-0020.

2. The discharger shall implement the accelerated monitoring as specified in Section D.4. of the M&RP No. R8-2004-0020 when the result of any single chronic toxicity test of the effluent exceeds 1.0 TUc.

3. The discharger shall develop an Initial Investigation Toxicity Reduction Evaluation (IITRE) work plan that describes the steps the discharger intends to follow if required by Toxicity Requirement No. 4, below. The work plan shall include at a minimum:

    a. A description of the investigation and evaluation techniques that will be used to identify potential causes/sources of the exceedance, effluent variability, and/or efficiency of the treatment system in removing toxic substances. This shall include a description of an accelerated chronic toxicity testing program.

    b. A description of the methods to be used for investigating and maximizing in-house treatment efficiency and good housekeeping practices.

    c. A description of the evaluation process to be used to determine if implementation of a more detailed TRE\TIE is necessary.

4. The discharger shall implement the IITRE work plan whenever the results of chronic toxicity tests of the effluent exceed:

    a. A two month median value of 1.0 TUc for survival or reproduction endpoint or,

    b. Any single test value of 1.7 TUc for survival endpoint.

5. The discharger shall develop a detailed Toxicity Reduction Evaluation and Toxicity Identification Evaluation (TRE/TIE) work plan that shall describe the steps the discharger intends to follow if the implemented IITRE fails to identify the cause of, or rectify, the toxicity.

---

21 *See Section G.9. Compliance Determination.*

6. The discharger shall use as guidance, at a minimum, EPA manuals EPA/600/2-88/070 (industrial), EPA/600/4-89-001A (municipal), EPA/600/6-91/005F (Phase I), EPA/600/R-92/080 (Phase II), and EPA-600/R-92/081 (Phase III) to identify the cause(s) of toxicity. If during the life of this Order the aforementioned EPA manuals are revised or updated, the revised/updated manuals may also be used as guidance. The detailed TRE/TIE work plan shall include:

   a. Further actions to investigate and identify the cause of toxicity;

   b. Actions the discharger will take to mitigate the impact of the discharge and to prevent the recurrence of toxicity; and

   c. A schedule for these actions.

7. The discharger shall implement the TRE/TIE workplan if the IITRE fails to identify the cause of, or rectify, the toxicity, or if in the opinion of the Executive Officer the IITRE does not adequately address an identified toxicity problem.

8. The discharger shall assure that adequate resources are available to implement the required TRE/TIE.

C. RECEIVING WATER LIMITATIONS[22]:

1. The discharge of wastes shall not cause a violation of any applicable water quality standards for receiving waters adopted by the Board or State Board, as required by the Clean Water Act and regulations adopted thereunder.

2. The discharge shall not cause any of the following:

   a. Coloration of the receiving waters, which causes a nuisance or adversely affects beneficial uses.

   b. Deposition of oil, grease, wax or other materials in the receiving waters in concentrations which result in a visible film or in coating objects in the water, or which cause a nuisance or affect beneficial uses.

   c. An increase in the amounts of suspended or settleable solids in the receiving waters, which will cause a nuisance or adversely affect beneficial uses as a result of controllable water quality factors.

   d. Taste or odor producing substances in the receiving waters at concentrations, which cause a nuisance or adversely affect beneficial uses.

---

22 *Receiving water limitations are specific interpretations of water quality objectives from applicable water quality control plans. As such, they are a required part of this Order. A receiving water condition not in conformance with any of these receiving water limitations is not necessarily a violation of this Order. The Regional Board may require an investigation to determine the cause and culpability prior to asserting a violation has occurred, or requiring that corrective action be taken.*

e. The presence of radioactive materials in the receiving waters in concentrations, which are deleterious to human, plant or animal life.

f. The depletion of the dissolved oxygen concentration below 5.0 mg/l.

g. The temperature of the receiving waters to be raised above 90°F (32°C) during the period of June through October, or above 78°F (26°C) during the rest of the year.

h. The concentration of pollutants in the water column, sediments, or biota to adversely affect the beneficial uses of the receiving water. The discharge shall not result in the degradation of inland surface water communities and populations, including vertebrate, invertebrate, and plant species.

3. Pollutants not specifically mentioned and limited in this Order shall not be discharged at levels that will bioaccumulate in aquatic resources to levels, which are harmful to human health.

4. The discharge shall not contain constituent concentrations of mercury that will result in the bioaccumulation of methylmercury in fish flesh tissue greater than 0.3 milligram methylmercury/kilogram fish.

D. BIOSOLIDS REQUIREMENTS:

1. Collected screenings, biosolids, and other solids removed from liquid wastes shall be disposed of in a manner that is consistent with Chapter 15, Division 3, Title 23, of the California Code of Regulations and approved by the Executive Officer.

2. The use and disposal of biosolids shall comply with existing Federal and State laws and regulations, including permitting requirements and technical standards included in 40 CFR 503[23].

3. Any proposed change in biosolids use or disposal practice from a previously approved practice shall be reported to the Executive Officer and EPA Regional Administrator at least 90 days in advance of the change.

4. The discharger shall take all reasonable steps to minimize or prevent any discharge or biosolids use or disposal that has the potential of adversely affecting human health or the environment.

---

23 *See Section K.6. – Permit Re-opening, Revision, Revocation, and Re-issuance*

E. WATER RECYCLING REQUIREMENTS:

1. The discharger shall be responsible for assuring that recycled water is delivered and utilized in conformance with this Order, the recycling criteria contained in Title 22, Division 4, Chapter 3, Sections 60301 through 60355, California Code of Regulations, and the "Guidelines for Use of Reclaimed Water" by the California Department of Health Services. The discharger shall conduct periodic inspections of the facilities of the recycled water users to monitor compliance by the users with this Order.

2. The discharger shall establish and enforce Rules and Regulations for Recycled Water users, governing the design and construction of recycled water use facilities and the use of recycled water in accordance with the uniform statewide recycling criteria established pursuant to the California Water Code Section 13521.

    a. Use of recycled water by the discharger shall be consistent with its Rules and Regulations for Recycled Water Use.

    b. Any revisions made to the Rules and Regulations shall be subject to the review of the Regional Board, the California Department of Health Services, and the County of San Bernardino Department of Environmental Health. The revised Rules and Regulations or a letter certifying that the discharger's Rules and Regulations contain the updated provisions in this Order, shall be submitted to the Regional Board within 60 days of adoption of this Order by the Regional Board.

3. The discharger shall, within 60 days of the adoption of this Order, review and update as necessary its program to conduct compliance inspections of recycled water reuse sites. Inspections shall determine the status of compliance with the discharger's Rules and Regulations for Recycled Water Use.

4. The storage, delivery, or use of recycled water shall not individually or collectively, directly or indirectly, result in a pollution or nuisance, or adversely affect water quality, as defined in the California Water Code. The use of recycled water shall be in conformance with the wastewater recycling plan specified in the Basin Plan (Table 5-7). Proposed large scale wastewater recycling activities which are not in conformance with the Basin Plan shall be considered for approval by the Regional Board on a case by case basis (see also Section E.6., below).

5. Prior to delivering recycled water to any new user, the discharger shall submit to the Regional Board, the California Department of Health Services and the San Bernardino County Health Department a report containing the following information for review and approval:

    a. The average number of persons estimated to be served at each use site area on a daily basis.

b. The specific boundaries of the proposed use site area including a map showing the location of each facility, drinking water fountain, and impoundment to be used.

c. The person or persons responsible for operation of the recycled water system at each use area.

d. The specific use to be made of the recycled water at each use area.

e. The methods to be used to assure that the installation and operation of the recycled system will not result in cross connections between the recycled water and potable water piping systems. This shall include a description of the pressure, dye or other test methods to be used to test the system.

f. Plans and specifications which include following:

1) Proposed piping system to be used.
2) Pipe locations of both the recycled and potable systems.
3) Type and location of the outlets and plumbing fixtures that will be accessible to the public.
4) The methods and devices to be used to prevent backflow of recycled water into the potable water system.
5) Plan notes relating to specific installation and use requirements.

6. Proposed large scale recycling activities that are not in conformance with the Basin Plan shall be initiated only with the prior approval of the Regional Board. The Executive Officer may require the submission of additional information in order to evaluate the water quality impacts of the proposal.

7. An on-site supervisor responsible for the operation of the recycled water distribution system shall be designated by the user. The supervisor shall be responsible for enforcing this Order, prevention of potential hazards, the installation, operation and maintenance of the distribution system, maintenance of the distribution and irrigation system plans in "as-built" form, and for the distribution of the recycled wastewater in accordance with this Order.

F. PRETREATMENT REQUIREMENTS:

1. The discharger shall develop and implement an acceptable pretreatment program.

2. The discharger shall establish and update as necessary and appropriate contractual agreements with all governmental agencies[24]. The contractual agreements shall give the discharger the authority to implement and enforce the EPA approved pretreatment program within the sewer service areas of the treatment facility. The discharger shall assure that any other steps necessary to provide this implementation and enforcement authority (e.g. adoption of ordinances, etc.) are taken by all governmental agencies. If a governmental agency has an EPA approved pretreatment program for any portion of the service area of the treatment facility, the discharger's pretreatment program shall contain provisions ensuring that that governmental agency's program is implemented. In the event that any agency discharging to discharger's facility fails to effectively implement its individual EPA approved pretreatment program, the discharger shall implement and enforce its approved program within that agency's service area.

3. The discharger shall ensure that the POTW[25] pretreatment program for all contributory agencies discharging to the discharger's treatment facility are implemented and enforced. The discharger shall be responsible and liable for the performance of all Control Authority pretreatment requirements contained in 40 CFR 403, including any subsequent regulatory revisions to Part 403. Where Part 403 or subsequent revisions place mandatory actions upon the discharger as Control Authority but does not specify a timetable for completion of the actions, the discharger shall submit for approval of the Regional Board's Executive Officer, a schedule for implementation of the required actions and shall implement the approved schedule. The schedule for implementation shall be submitted within six months from the date that such mandatory actions are established. For violations of pretreatment requirements, the discharger shall be subject to enforcement actions, penalties, fines and other remedies by the EPA, or other appropriate parties, as provided in the CWA, as amended (33 USC 1351 et seq.). The EPA or the Regional Board may also initiate enforcement action against an industrial user (IU) for non-compliance with applicable standards and requirements as provided in the CWA.

4. The discharger shall perform the pretreatment functions as required in 40 CFR Part 403 including, but not limited to:

   a. Enforce the pretreatment requirements under 40 CFR 403.5 and 403.6;

   b. Implement the necessary legal authorities as provided in 40 CFR 403.8(f)(1);

   c. Implement the programmatic functions as provided in 40 CFR 403.8(f)(2);

   d. Publish a list of significant non-compliance as required by 40 CFR 403.8(f)(2)(vii); and

   e. Provide the requisite funding and personnel to implement the pretreatment program as provided in 40 CFR 403.8(f)(3).

---

24 *Member agencies and sewering agencies discharging wastewater into the facility.*

25 *Publicly owned treatment works.*

5. The following wastes shall not be introduced into the treatment works:

   a. Wastes which create a fire or explosion hazard in the treatment works;

   b. Wastes which will cause corrosive structural damage to treatment works, but, in no case, wastes with a pH lower than 5.0 unless the works are designed to accommodate such wastes;

   c. Wastes at a flow rate and/or pollutant discharge rate which is excessive over relatively short time periods so that there is a treatment process upset and subsequent loss of treatment efficiency;

   d. Solid or viscous wastes in amounts that would cause obstruction to the flow in sewers or otherwise interfere with the proper operation of the treatment works.

6. The discharger shall ensure compliance with any existing or future pretreatment standard promulgated by EPA under Section 307 of the CWA or amendments thereto for any discharge to the municipal system.

7. The discharger shall comply with effluent standards or prohibitions established under Section 307(a) of the CWA for toxic pollutants within the time provided in the regulations that establish these standards or prohibitions, even if this Order has not yet been modified to incorporate the requirement.

8. The discharger shall require each user not in compliance with any pretreatment standard to submit periodic notice (over intervals not to exceed nine months) of progress toward compliance with applicable toxic and pretreatment standards developed pursuant to the CWA or amendments thereto. The discharger shall forward a copy of such notice to the Regional Board and to the EPA Regional Administrator.

G. COMPLIANCE DETERMINATION:

1. The "maximum daily" concentration is defined as the measurement made on any single grab sample or composite sample.

2. Compliance with average weekly and monthly discharge limitations specified under Discharge Specifications A.1.a., A.1.b. and A.1.e. shall be determined from the average of the analytical results of all samples collected during a calendar week or month, respectively.

3. Compliance with the 12-month average limit under Discharge Specification A.1.c. and A.1.d. shall be determined by the arithmetic mean of the last twelve monthly averages.

4. Compliance determinations for total chlorine residual shall be based on 99% compliance. To determine 99% compliance with the effluent limitation specified in Discharge Specification A.1.b. for total chlorine residual, the following conditions shall be satisfied.

   a. The total time during which the total chlorine residual values are above 0.1 mg/l (instantaneous maximum value) shall not exceed 7 hours and 26 minutes in any calendar month;

   b. No individual excursion from 0.1 mg/l value shall exceed 5 minutes; and

   c. No individual excursion shall exceed 5.0 mg/l.

5. Compliance with Discharge Specifications A.1.c.(2). shall be determined based on IEUA's (RP-1, RP-4, RP-5, and CCWRF) areawide TDS water supply quality and shall be determined from TDS analysis of secondary treated wastewater. The discharger shall provide the necessary calculations showing the overall TDS water supply quality.

6. If the TIN limit in this Order (Discharge Specifications A.1.d.) is exceeded, compliance shall be achieved by removal of an equivalent amount of total inorganic nitrogen (nitrogen offset program) from RP-5 and/or RP-1 and/or RP-4. The discharger shall provide the necessary calculations showing that the offset program has not resulted in any net increase in TIN discharges from RP-1 and RP-4, RP-5 and CCWRF.

7. Exceedances of the "10 NTU at any time" turbidity requirement referenced in Discharge Specifications A.2.a.(1)(b)iii. shall not be considered a violation of these waste discharge requirements if such exceedance does not exceed a duration of one minute. The discharger shall not be considered to be in violation of this requirement if the apparent exceedance was caused by interference with, or malfunction of, the monitoring instrument. If the discharger is using a properly operating backup turbidimeter, the reading of the backup turbidimeter shall be considered in determining whether there has been an actual noncompliance.

8. Compliance with the weekly average total coliform limit expressed in Discharge Specification A.2.b.(2) shall be based on a running median of the test results from the previous 7 days. To comply with the weekly average limit, the 7-day median MPN must not exceed 2.2 per 100 milliliters on any day during the week. However, only one violation is recorded for each calendar week, even if the 7-day median MPN value is greater than 2.2 for more than one day in the week.

9. Pursuant to 40 CFR 401.17, the discharger shall be in compliance with the pH limitation specified in Discharge Specification A.6., above, provided that both of the following conditions are satisfied:

a. The total time during which the pH values are outside the required range of 6.5-8.5 pH values shall not exceed 7 hours and 26 minutes in any calendar month; and

b. No individual excursion from the range of pH values shall exceed 60 minutes.

10. Compliance determinations shall be based on available analyses for the time interval associated with the effluent limitation. Where only one sample analysis is available in a specified time interval (e.g., monthly or weekly average), that sample shall serve to characterize the discharge for the entire interval. If quarterly sample results show noncompliance with the average monthly limit and that sample result is used for compliance determinations for each month of the quarter, then three separate violations of the average monthly limit shall be deemed to have occurred.

11. Compliance with a single effluent limitation which applies to a group of chemicals (e.g., PCBs), based on a single sample shall be determined by considering the concentrations of individual members of the group to be zero if the analytical response for the individual chemical falls below the method detection limit (MDL or PQL) for that chemical.

12. For priority pollutants, the discharger shall be deemed out of compliance with an effluent limitation if the concentration of the priority pollutant in the monitoring sample is greater than the effluent limitation.

a. Compliance determination shall be based on the minimum level (ML)[26] specified in Attachment "A" of the Monitoring and Reporting Program No. R8-2004-0020, unless an alternative minimum level is approved by the Regional Board's Executive Officer. When there is more than one ML value for a given substance, the discharger shall select the ML value which is below the calculated effluent limitation, and use its associated analytical method, listed in Attachment "A" of the M&RP. If no ML value is below the effluent limitation, then the Regional Board will select the lowest ML value and its associated analytical method.

b. When determining compliance with an average monthly limit and more than one sample result is available in a month, the discharger shall compute the arithmetic mean unless the data set contains one or more reported determinations of detected but not quantified (DNQ) or not detected (ND). In those cases, the discharger shall compute the median in place of the arithmetic mean in accordance with the following procedure:

1) The data set shall be ranked from low to high, reported ND determinations lowest, DNQ determinations next, followed by quantified values (if any). The order of the individual ND or DNQ determinations is unimportant.

---

26 *Minimum level is the concentration at which the entire analytical system must give a recognizable signal and acceptable point. The ML is the concentration in a sample that is equivalent to the concentration of the lowest calibration standard analyzed by a specific analytical procedure, assuming that all the method specified sample weights, volumes, and processing steps have been followed.*

2) The median value of the data set shall be determined. If the data set has an odd number of data points, then the median is the middle value. If the data set has an even number of data points, then the median is the average of the two values around the middle unless one or both of the points are ND or DNQ, in which case the median value shall be the lower of the two data points where DNQ is lower than a value and ND is lower than DNQ. If a sample result, or the arithmetic mean or median of multiple sample results, is below the reported ML, and there is evidence that the priority pollutant is present in the effluent above an effluent limitation and the discharger conducts a pollutant minimization program (PMP)[27] (as described in Section J. 7.), the discharger shall not be deemed out of compliance.

13. For non-priority pollutants, the discharge shall be considered to be in compliance with an effluent limitation, which is less than or equal to the PQL specified in Attachment "C" of M&RP No. R8-2004-0020 if the arithmetic mean of all test results for the monitoring period is less than the constituent effluent limitation. Analytical results that are less than the specified PQL shall be assigned a value of zero.

14. "Upset" means an exceptional incident in which there is unintentional and temporary noncompliance with permit effluent limitations because of factors beyond the reasonable control of the discharger. An upset does not include noncompliance to the extent caused by operational error, improperly designed treatment facilities, inadequate treatment facilities, lack of preventive maintenance, or careless or improper action. A discharger that wishes to establish the affirmative defense of an upset in an action brought for noncompliance shall demonstrate, by relevant direct or circumstantial evidence that:

    a. An upset occurred and that the discharger can identify the likely cause(s) of the upset;

    b. The permitted facility was being properly operated at the time of the upset;

    c. The discharger submitted notice of the upset as required in Section H.14., below; and

    d. The discharger complied with any remedial measures required under Section J.10., below.

    Regional Board's Executive Officer's preliminary determinations shall not be subject to judicial review until after final administrative action has been taken by the Regional Board. In any enforcement proceeding, the discharger seeking to establish the occurrence of an upset has the burden of proof.

---

27 *The goal of the PMP shall be to reduce all potential sources of a priority pollutant(s) through pollutant minimization (control) strategies, including pollution prevention measures as appropriate, to maintain the effluent concentration at or below the water quality-based effluent limitation.*

H. REQUIRED NOTICES AND REPORTS:

1. Reporting Provisions:

   a. All applications, reports, or information submitted to the Regional Board shall be signed and certified in accordance with 40 CFR 122.22 except as otherwise specified by the Regional Board's Executive Officer.

   b. The discharger shall furnish, within a reasonable time, any information the Regional Board or EPA may request to determine compliance with this Order or whether cause exists for modifying, revoking and reissuing, or terminating this Order. The discharger shall also furnish to the Regional Board, upon request, copies of records required to be kept by this Order.

   c. Except for data determined to be confidential under Section 308 of the CWA, all reports prepared in accordance with the terms of this Order shall be available for public inspection at the offices of the Regional Board and the Regional Administrator of EPA. As required by the CWA, effluent data shall not be considered confidential. Knowingly making any false statements on any such report may result in the imposition of criminal penalties as provided for in Section 309 of the CWA and Section 13387 of the California Water Code.

2. By October 1, 2004, the discharger shall notify the Executive Officer of its continuous involvement with the comprehensive mercury investigation program currently being conducted by a group of Santa Ana River system dischargers. If the discharger discontinues its involvement with this comprehensive program, the discharger shall, within 60 days of that date, submit for the approval of the Executive Officer its plan for the annual testing of mercury levels in fish flesh samples collected from the Santa Ana River, upstream of, at, and downstream of the point of the River's confluence with Chino Creek. Upon approval, the discharger shall implement the plan.

3. By October 1, 2004, the discharger shall submit an updated written description of electrical power failure safeguards. Such safeguards may include alternate power sources, standby generators, retention capacity, operating procedures, or other means. The description of the safeguards provided shall include an analysis of the frequency, duration, and impact of power failures experienced over the past year(s) of treatment plant operation on effluent quality and on the capability of the discharger to comply with the requirements of this Order. Deficiencies in present safeguards must be identified together with a plan for any necessary corrective actions. The adequacy of the safeguards and the corrective action plan (if necessary) is subject to the approval of the Executive Officer.

4. By October 1, 2004, the discharger shall submit an updated technical report on the discharger's preventive (failsafe) and contingency (response and cleanup) plans for controlling accidental discharges and for minimizing the effect of such events. This technical report may be combined with that required under Section H.3., above. The technical report shall:

   a. Identify the possible sources of accidental loss, untreated waste bypass, and contaminated drainage. Loading and storage areas, power outage, waste treatment outage, and failure of process equipment, tanks, and pipes should be considered.

   b. Evaluate the effectiveness of present facilities and procedures and state when they become operational.

   c. Describe any new facilities and procedures needed. Predict the effectiveness of the proposed facilities and procedures and provide an implementation schedule containing interim and final dates when they will be constructed, implemented, or operational.

   d. Describe proposed and completed training programs and schedules to train and familiarize plant operating personnel with the discharger's preventive (failsafe) and contingency (response and cleanup) plans for controlling accidental discharges and for minimizing the effect of such events.

5. By December 1, 2004, the discharger shall submit for approval by the Executive Officer, a report that details the manner in which sampling, monitoring and reporting will be performed as required in this Order. This report shall include a description of measures, control system(s) and monitoring the discharger will implement to comply with Provision J.5. of this Order.

6. By March 1, 2005, the discharger shall submit a copy of the Initial Investigation Toxicity Reduction Evaluation work plan specified in Toxicity Requirement B.3 of this Order.

7. By March 1, 2005, the discharger shall submit a copy of the TRE/TIE work plan specified in Toxicity Requirement B.5 of this Order.

8. The discharger shall orally notify the Executive Officer of the Regional Board, or designee, within 24 hours of a discharge of secondary treated and disinfected wastewater into Chino Creek. Within seven days after the discharge, the discharger shall submit documentation that 20:1 dilution existed in Chino Creek at the time of the discharge. Documentation shall include the date(s), time(s), and duration(s) of the discharge, the corresponding flow in the receiving stream during the discharge, and the climatic condition in the area during the discharge.

9. The discharger shall give advance notice to the Regional Board of any planned physical alterations or additions to the permitted facility or changes in operation or activity that may result in noncompliance with these waste discharge requirements.

10. As soon as possible but no later than March 31, 2005, the discharger shall submit a report of the discharger's investigation of the cause(s) of free cyanide concentrations in the CCWRF effluent that exceed the final limitations in this Order. The report shall include the following:

    a. An analysis of the data collected and an evaluation of the origin(s) of free cyanide measured in the effluent;
    b. An evaluation of control measures; and
    c. A proposed plan and schedule for implementation of recommended control measures. The plan and schedule shall assure that control measures are implemented so that compliance with the final free cyanide limitations in this Order is achieved as soon as possible but no later than December 31, 2005, unless the discharger provides justification that compliance by this date is infeasible. (see also K. 9. Permit Re-opening, Revision, Revocation and Re-issuance.)

11. Beginning on September 30, 2004 and quarterly thereafter, the discharger shall also submit quarterly progress reports to describe the progress of studies and/or actions undertaken to achieve compliance with the final effluent limitations for free cyanide. (The requisite, March 31, 2005 report can serve as a quarterly report.)

12. The discharger shall provide adequate notice to the Regional Board of:

    a. Any new introduction of pollutants into the POTW from an indirect discharger that would be subject to Sections 301 or 306 of the CWA if it were directly discharging those pollutants[28].
    b. Any change in the volume or character of pollutants being introduced by an existing or new source into the treatment facility that will cause or threaten to cause a violation of this Order.
    c. Any planned changes in the discharger's biosolids use or disposal practice, or provision of additional disposal sites not reported during the permit application process.
    d. Any proposed change in the character, location, or method of disposal of the discharge, or any proposed change in ownership of the facility.
    e. All instances of noncompliance. Reports of noncompliance shall be submitted with the discharger's next scheduled self-monitoring report or earlier, as specified in this Order, or if requested by the Executive Officer, or if required by an applicable standard for biosolids use and disposal.

13. The discharger shall submit a Title 22 Engineering Report by January 1, 2005 for review and approval by the California Department of Health Services prior to the use of recycled water at proposed recycling sites. The Engineering Report shall comply with the California Code of Regulations, Title 22, Chapter 3.

---

28 *Adequate notice shall include information on the quality and quantity of effluent introduced, and any anticipated impact of the change on the quantity or quality of the discharger's effluent and/or sludge.*

14. The discharger shall file a written report with the Regional Board within ninety (90) days after the average dry-weather waste flow for any month equals or exceeds 75 percent of the design capacity of the waste treatment and/or disposal facilities. The discharger's senior administrative officer shall sign a letter which transmits that report and certifies that the policy making body is adequately informed about it. The report shall include:

    a. Average daily flow for the month, the date on which the instantaneous peak flow occurred, the rate of that peak flow, and the total flow for the day.
    b. The discharger's best estimate of when the average daily dry-weather flow rate will equal or exceed the design capacity of the treatment facilities.
    c. The discharger's intended schedule for studies, design, and other steps needed to provide additional capacity for the waste treatment and/or disposal facilities before the waste flow rate equals the capacity of present units.

15. The discharger shall file with the Regional Board a Report of Waste Discharge at least 180 days before making any material change in the character, location, or volume of the discharge. A material change includes, but is not limited to, the following:

    a. Adding a major industrial waste discharge to a discharge of essentially domestic sewage, or adding a new process or product by an industrial facility resulting in a change in the character of the waste.
    b. Significantly changing the disposal method or location, such as changing the disposal to another drainage area or water body.
    c. Significantly changing the method of treatment.
    d. Increasing the treatment plant design capacity beyond that specified in this Order.

16. The discharger shall immediately report any condition related to the discharger's collection, treatment or disposal facilities that endangers human health or the environment. This includes any unauthorized discharge of treated, partially treated, or untreated wastewater from the discharger's collection, treatment, or disposal system that endangers human health or the environment. All available information concerning the condition and/or unauthorized discharge shall be provided to the Executive Officer or the Executive Officer's designee (909-782-4130) and the Office of Emergency Services (1-800-852-7550), as soon as the discharger becomes aware of the circumstances. A written report shall be submitted within 5 working days and shall contain a description of the condition and its cause; the duration of the condition, including exact dates and times, and, if the condition has not been corrected, the anticipated time it is expected to continue; and the steps taken or planned to reduce, eliminate, and prevent recurrence of the condition, with a schedule for their implementation. The following shall be included as information that must be reported within 24 hours from time discharger becomes aware of the circumstances:

a. Any unanticipated bypass that exceeds any limitation of this Order.

b. Any upset that exceeds any limitation of this Order.

c. Any violation of a maximum daily discharge limitation for any of the pollutants listed in this Order.

d. Any unauthorized discharge of treated, partially treated, or untreated wastewater resulting from the intentional or unintentional diversion of wastewater from a collection, treatment or disposal system that endangers human health or the environment.

The Executive Officer or the Executive Officer's designee may waive the above required written report on a case-by-case basis.

Unauthorized discharges of more than 100 gallons that do not endanger human health or the environment shall be reported to the Executive Officer's designee no later than the last day of the month following the month the discharges occurred.

I. PENALTIES:

1. Violation of any of the provisions of the NPDES program or of any of the provisions of this Order may subject the violator to any of the penalties described under Section 309(c) of the CWA, or any subsequent amendments to Section 309(c). The violator may be subjected to any combination of the penalties described herein at the discretion of the prosecuting authority; however, only one kind of penalty may be applied for each kind of violation.

2. The CWA provides that any person who violates any portion of this Order implementing Sections 301, 302, 306, 307, 308, 318, or 405 of the CWA, or any order requirement or limitation implementing any such sections in this Order, is subject to a civil penalty not to exceed $25,000 per day for each violation. The CWA provides that any person who willfully or negligently violates this Order with regard to these sections of the CWA is subject to criminal penalties of $2,500 to $25,000 per day of violation, or imprisonment of not more than 1 year, or both. Any person who knowingly violates a provision implementing these sections is subject to criminal penalties of $5,000 to $50,000 per day of violation, or imprisonment of not more than 3 years, or both.

3. The CWA provides that any person who knowingly falsifies, tampers with, or knowingly renders inaccurate any monitoring device or method required to be maintained under this Order shall, upon conviction, be punished by a fine of not more than $10,000 per violation, or by imprisonment for not more than 2 years per violation, or by both.

4. The CWA provides that any person who knowingly makes any false statement, representation, or certification in any record or other document submitted or required to be maintained under this Order, including monitoring reports or reports of compliance or noncompliance shall, upon conviction, be punished by a fine of not more than $10,000 per violation, or by imprisonment for not more than 2 years per violation, or by both.

5. The California Water Code provides that any person who violates an order of the Regional Board is subject to civil penalties of up to $25,000 per day of violation, and when the violation involves the discharge of pollutants, additional civil penalties of up to $25 per gallon.

J. PROVISIONS:

1. This Order shall become effective upon its adoption. This Order shall serve as a National Pollutant Discharge Elimination System permit pursuant to Section 402 of the CWA, or amendments thereto. The NPDES permit shall become effective 10 days after the date of adoption provided the Regional Administrator of the EPA has no objection. If the Regional Administrator objects to its issuance, this Order shall not serve as an NPDES permit until such objection is withdrawn.

2. Neither the treatment nor the discharge of waste shall create, or threaten to create, a nuisance or pollution as defined by Section 13050 of the California Water Code.

3. Order No. 99-36 is hereby rescinded.

4. This Order expires August 1, 2009 and the discharger must file a Report of Waste Discharge in accordance with Title 23, Division 3, Chapter 9 of the California Code of Regulations not later than 180 days in advance of this expiration date. The Report of Waste Discharge shall serve as the application for issuance of new waste discharge requirements.

5. The discharger shall comply with M&RP No. R8-2004-0020 as issued by the Executive Officer. This monitoring and reporting program may be modified by the Executive Officer at any time during the term of this Order, and may include an increase in the number of parameters to be monitored, the frequency of the monitoring or the number and size of samples to be collected. Any increase in the number of parameters to be monitored, the frequency of the monitoring or the number and size of samples to be collected may be reduced back to the levels specified in the original monitoring and reporting program at the discretion of the Executive Officer.

6. The discharger shall optimize chemical additions needed in the treatment process to meet waste discharge requirements so as to minimize total dissolved solid increases in the recycled water.

7. The discharger shall conduct a Pollutant Minimization Program (PMP) when there is evidence that the priority pollutant is present in the effluent above an effluent limitation (e.g., sample results reported as detected but not quantified (DNQ) when the effluent limitation is less than the MDL, sample results from analytical methods more sensitive than those methods included in the permit, presence of whole effluent toxicity, health advisories for fish consumption, results of benthic or aquatic organism tissue sampling) and either: (i) A sample result is reported as DNQ and the effluent limitation is less than the reported ML; or (ii) A sample result is reported as ND and the effluent limitation is less than the MDL. The PMP shall include, but not be limited to, the following actions and submittals acceptable to the Regional Board:

    a. An annual review and semi-annual monitoring of potential sources of the reportable priority pollutant(s), which may include fish tissue monitoring and other bio-uptake sampling;

    b. Quarterly monitoring for the reportable priority pollutant(s) in the influent to the wastewater treatment system;

    c. Submittal of a control strategy designed to proceed toward the goal of maintaining concentrations of the reportable priority pollutant(s) in the effluent at or below the effluent limitation;

    d. Implementation of appropriate cost-effective control measures for the reportable priority pollutant(s), consistent with the control strategy; and

    e. An annual status report that shall be sent to the Regional Board including:

        1) All PMP monitoring results for the previous year;

        2) A list of potential sources of the reportable priority pollutant(s);

        3) A summary of all actions undertaken pursuant to the control strategy; and

        4) A description of actions to be taken in the following year.

8. The discharger shall maintain a copy of this Order at the site so that it is available to site operating personnel at all times. Key operating personnel shall be familiar with its content.

9. The discharger must comply with all of the requirements of this Order. Any violation of this Order constitutes a violation of the California Water Code and may constitute a violation of the CWA and its regulations, and is grounds for enforcement action, termination of this Order, revocation and re-issuance of this Order, denial of an application for re-issuance of this Order; or a combination thereof.

10. The discharger shall take all reasonable steps to:

    a. Minimize or prevent any discharge that has a reasonable likelihood of adversely affecting human health or the environment; and

b. Minimize any adverse impact to receiving waters resulting from noncompliance with any requirements specified in this Order, including such accelerated or additional monitoring as necessary to determine the nature and impact of the noncomplying discharge.

11. The discharger shall provide safeguards to assure that should there be reduction, loss, or failure of electric power, the discharger will comply with the requirements of this Order.

12. The discharger shall, at all times, properly operate and maintain all facilities and systems of treatment and control including sludge use, disposal facilities, and related appurtenances which are installed or used by the discharger to achieve compliance with this Order. Proper operation and maintenance includes adequate laboratory controls, appropriate quality assurance procedures, effective performance, adequate funding, adequate staffing and training, and adequate process controls. This provision requires the operation of back up or auxiliary facilities or similar systems, which are installed by a discharger only when the operation is necessary to achieve compliance with the requirements of this Order.

13. The discharger shall update as necessary, the "Operation and Maintenance Manual (O&M Manual)" which it has developed for the CCWRF to conform to latest plant changes and requirements. The O&M Manual shall be readily available to operating personnel onsite. The O&M Manual shall include the following:

a. Description of the treatment plant table of organization showing the number of employees, duties and qualifications and plant attendance schedules (daily, weekends and holidays, part-time, etc). The description should include documentation that the personnel are knowledgeable and qualified to operate the treatment facility so as to achieve the required level of treatment at all times.

b. Detailed description of safe and effective operation and maintenance of treatment processes, process control instrumentation and equipment.

c. Description of laboratory and quality assurance procedures.

d. Process and equipment inspection and maintenance schedules.

e. Description of safeguards to assure that, should there be reduction, loss, or failure of electric power, the discharger will be able to comply with requirements of this Order.

f. Description of preventive (fail-safe) and contingency (response and cleanup) plans for controlling accidental discharges, and for minimizing the effect of such events. These plans shall identify the possible sources (such as loading and storage areas, power outage, waste treatment unit failure, process equipment failure, tank and piping failure) of accidental discharges, untreated or partially treated waste bypass, and polluted drainage.

14. The discharger's wastewater treatment plant shall be supervised and operated by persons possessing certificates of appropriate grade pursuant to Title 23, Division 3, Chapter 14, California Code of Regulations.

15. The discharge of any radiological, chemical, or biological warfare agent or high level radiological waste is prohibited.

16. The provisions of this Order are severable, and if any provision of this Order, or the application of any provisions of this Order to any circumstance, is held invalid, the application of such provision to other circumstances, and the remainder of this Order shall not be affected thereby.

17. The filing of a request by the discharger for modification, revocation and re-issuance, or termination of this Order or a notification of planned changes or anticipated noncompliance does not stay any requirements of this Order.

18. The requirements prescribed herein do not authorize the commission of any act causing injury to the property of another, nor protect the discharger from liabilities under federal, state, or local laws, nor guarantee the discharger a capacity right in the receiving waters.

19. This Order does not convey any property rights of any sort, or any exclusive privilege.

20. This Order is not transferable to any person except after notice to, and approval by the Executive Officer. The Regional Board may require modification or revocation and re-issuance of this Order to change the name of the discharger and incorporate such other requirements as may be necessary under the CWA.

21. Collected screenings, sludge, and other solids removed from liquid wastes shall be disposed of in a manner approved by the Regional Board's Executive Officer.

22. If the discharger demonstrates a correlation between the biological oxygen demand (BOD) and total organic carbon (TOC) concentrations in the effluent to the satisfaction of the Executive Officer, compliance with the BOD limits contained in this Order may be determined based on analyses of the TOC of the effluent.

23. In the event of any change in control or ownership of land or waste discharge facility presently owned or controlled by the discharger, the discharger shall notify the succeeding owner or operator of the existence of this Order by letter, a copy of which shall be forwarded to the Regional Board.

24. It shall not be a defense for a discharger in an enforcement action that it would have been necessary to halt or reduce the permitted activity in order to maintain compliance with the requirements of this Order.

25. Bypass (the intentional diversion of waste streams from any portion of a treatment facility or collection system) is prohibited unless it is permitted under the terms of this Order. The Regional Board may take enforcement action against the discharger for unpermitted bypass unless:

    a. Bypass was unavoidable to prevent loss of life, personal injury, or severe property damage. (Severe property damage means substantial physical damage to property, damage to the treatment facilities that causes them to become inoperable, or substantial and permanent loss of natural resources that can reasonably be expected to occur in the absence of a bypass. Severe property damage does not mean economic loss caused by delays in production.);

    b. There was no feasible alternative to bypass, such as the use of auxiliary treatment facilities, retention of untreated waste, or maintenance during normal periods of equipment down time. This condition is not satisfied if adequate back-up equipment should have been installed in the exercise of reasonable engineering judgment to prevent a bypass that could occur during normal periods of equipment down time or preventive maintenance; and

    c. The discharger submitted a notice to the Regional Board at least ten days in advance of the need for a bypass. The discharger may allow a bypass to occur that does not cause effluent limitations to be exceeded, but only if the by-pass is required for essential maintenance to assure efficient operation, and neither effluent nor receiving water limitations are exceeded. In such a case, the above bypass conditions are not applicable. The discharger shall promptly notify the Regional Board and the EPA within 24 hours of each such bypass.

26. The Regional Board, EPA, and other authorized representatives shall be allowed:

    a. Entry upon premises where a regulated facility or activity is located or conducted, or where records are kept under the requirements of this Order;

    b. Access to copy any records that are kept under the requirements of this Order;

    c. To inspect any facility, equipment (including monitoring and control equipment), practices, or operations regulated or required under this Order; and

    d. To photograph, sample and monitor for the purpose of assuring compliance with this Order, or as otherwise authorized by the CWA.

27. The discharger shall implement the proposed plan and schedule for achieving compliance with the free cyanide limitations in this Order (see H. 10. Required Notices and Reports) upon approval by the Executive Officer.

K. PERMIT RE-OPENING, REVISION, REVOCATION AND RE-ISSUANCE:

1. This Order may be modified, revoked and reissued, or terminated for cause.
2. This Order may be reopened to address any changes in State or federal plans, policies or regulations that would affect the quality requirements for the discharges.
3. This Order may be reopened to include effluent limitations for pollutants determined to be present in the discharge in concentrations that pose a reasonable potential to cause or contribute to violations of water quality objectives.
4. This Order may be reopened if the Regional Board or the discharger develops different site-specific total-to-dissolved ratios for cadmium, copper, lead, or any other constituent, which are acceptable to the Regional Board's Executive Officer.
5. This Order may be reopened and modified in accordance with the requirements set forth at 40 CFR 122 and 124, to include the appropriate conditions or limits to address demonstrated effluent toxicity based on newly available information, or to implement any EPA-approved new State water quality standards applicable to effluent toxicity.
6. This Order may be reopened to incorporate appropriate biosolids requirements if the State Water Resources Control Board and the Regional Water Quality Control Board are given the authority to implement regulations contained in 40 CFR 503.
7. This Order may be reopened to include an appropriate bioaccumulation based effluent limit for mercury if test results (as required in M&RP No. R8-2004-0020) show that the concentration levels of methylmercury in the fish tissue are at or above 0.3 milligrams per kilogram.
8. This Order may be reopened and modified in accordance with the requirements set forth at 40 CFR 122 and 124, to include the appropriate conditions or limits to address demonstrated effluent toxicity based on newly available information, or to implement any EPA-approved new State water quality standards applicable to effluent toxicity.
9. This Order may be reopened to consider appropriate modifications to the schedule specified in this Order for compliance with the final effluent limitations for free cyanide, based on consideration of CCWRF performance capability and/or justification provided by the discharger.

I, Gerard J. Thibeault, Executive Officer, do hereby certify that the foregoing is a full, true, and correct copy of an order adopted by the California Regional Water Quality Control Board, Santa Ana Region, on August 13, 2004.

_____

Gerard J. Thibeault
Executive Officer

California Regional Water Quality Control Board
Santa Ana Region

MONITORING AND REPORTING PROGRAM NO. R8-2004-0020
NPDES NO. CA8000073

for the

Inland Empire Utilities Agency
Carbon Canyon Water Reclamation Facility
Chino
San Bernardino County

California Regional Water Quality Control Board
Santa Ana Region

Inland Empire Utilities Agency
Carbon Canyon Water Reclamation Facility

MONITORING AND REPORTING PROGRAM NO. R8-2004-0020
NPDES NO. CA8000073

TABLE OF CONTENTS

PAGE

A. MONITORING AND REPORTING REQUIREMENTS 1-7

B. INFLUENT MONITORING 7-9

C. EFFLUENT MONITORING 9-13

D. TOXICITY MONITORING REQUIREMENTS 14-16

E. BIOSOLIDS MONITORING ..... .16

F. RECEIVING WATER MONITORING 16-17

G. WATER SUPPLY MONITORING 17

H. PRETREATMENT MONITORING AND REPORTING 18-21

I. REPORTING 21-22

ATTACHMENT "A", MINIMUM LEVELS
ATTACHMENT "B", PRIORITY POLLUTANT LIST
ATTACHMENT "C", PRACTICAL QUANTITATION LEVEL LIST

California Regional Water Quality Control Board
Santa Ana Region

Monitoring and Reporting Program (M&RP) No. R8-2004-0020
NPDES NO. CA8000073

for
Inland Empire Utilities Agency
Carbon Canyon Water Reclamation Facility
Chino, San Bernardino County

A. MONITORING AND REPORTING REQUIREMENTS:

1. All sampling and sample preservation shall be in accordance with the current edition of "*Standard Methods for the Examination of Water and Wastewater*" (American Public Health Association).

2. All laboratory analyses shall be performed in accordance with test procedures under 40 CFR 136 (latest edition) "*Guidelines Establishing Test Procedures for the Analysis of Pollutants*," promulgated by the United States Environmental Protection Agency (EPA), unless otherwise specified in this monitoring and reporting program (M&RP). In addition, the Regional Board and/or EPA, at their discretion, may specify test methods which are more sensitive than those specified in 40 CFR 136.

3. Chemical, bacteriological, and bioassay analyses shall be conducted at a laboratory certified for such analyses by the California Department of Health Services or EPA or at laboratories approved by the Regional Board's Executive Officer.

4. In conformance with federal regulations 40 CFR 122.45(c), analyses to determine compliance with the effluent limitations for metals shall be conducted using the total recoverable method. For Chromium (VI), the dissolved method in conformance with 40 CFR 136 may be used to measure compliance with the Chromium (VI) limitation.

5. For effluent and ambient receiving water monitoring:

   a. The discharger shall require its testing laboratory to calibrate the analytical system down to the minimum level (ML)[1] specified in Attachment "A" for priority pollutants with effluent limitations in this Order, unless an alternative minimum level is approved by the Regional Board's Executive Officer. When there is more than one ML value for a given substance, the discharger shall use the ML values, and their associated analytical methods, listed in Attachment "A" that are below the calculated effluent limitation. The discharger may select any one of those cited analytical methods for compliance determination. If no ML value is below the effluent limitation, then the lowest ML value, and its associated analytical method, listed in Attachment "A" shall be used. Any internal quality control data associated with the sample must be reported when requested by the Executive Officer. The Regional Board will reject the quantified laboratory data if quality control data is unavailable or unacceptable.

---

[1] *Minimum level is the concentration at which the entire analytical system must give a recognizable signal and acceptable point. The ML is the concentration in a sample that is equivalent to the concentration of the lowest calibration standard analyzed by a specific analytical procedure, assuming that all the method specified sample weights, volumes, and processing steps have been followed.*

TENTATIVE

b. The discharger shall report the results of analytical determinations for the presence of chemical constituents in a sample using the following reporting protocols:

1) Sample results greater than or equal to the reported ML shall be reported as measured by the laboratory (i.e., the measured chemical concentration in the sample).

2) Sample results less than the reported ML, but greater than or equal to the laboratory's current Method Detection Limit (MDL)[2], shall be reported as "Detected, but Not Quantified," or "DNQ." The estimated chemical concentration of the sample shall also be reported.

3) Sample results not detected above the laboratory's MDL shall be reported as "not detected" or "ND."

c. The discharger shall submit to the Regional Board reports necessary to determine compliance with effluent limitations for priority pollutants in this Order and shall follow the chemical nomenclature and sequential order of constituents shown in Attachment "B" – Priority Pollutant Lists. The discharger shall report with each sample result:

1) The ML or PQL[3] listed in Attachment "C" achieved by the testing laboratory; and
2) The laboratory's current MDL, as determined by the procedure found in 40 CFR 136 (revised as of May 14, 1999).

d. For receiving water monitoring and for those priority pollutants without effluent limitations, the discharger shall require its testing laboratory to quantify constituent concentrations to the lowest achievable MDL as determined by the procedure found in 40 CFR 136 (revised as of May 14, 1999). In situations where the most stringent applicable receiving water objective (freshwater or human health (consumption of organisms only), as specified for that pollutant in 40 CFR 131.38[4]) is below the minimum level value specified in Attachment "A" and the discharger cannot achieve an MDL value for that pollutant below the ML value, the discharger shall submit justification why a lower MDL value cannot be achieved. Justification shall be submitted together with monthly monitoring reports.

---

2 *MDL is the minimum concentration of a substance that can be measured and reported with 99 percent confidence that the analytical concentration is greater than zero, as defined in 40 CFR 136, Appendix B, revised as of May 14, 1999.*

3 *PQL is the lowest concentration of a substance that can be determined within ± 20 percent of the true concentration by 75 percent of the analytical laboratories tested in a performance evaluation study. Alternatively, if performance data are not available, the PQL is the method detection limit (MDL) x 5 for carcinogens and MDL x 10 for noncarcinogens.*

4 *See Federal Register/ Vol. 65, No. 97 / Thursday, May 18, 2000 / Rules and Regulations.*

6. For non-priority pollutants monitoring, all analytical data shall be reported with identification of practical quantitation levels and with method detection limits, as determined by the procedure found in 40 CFR 136 (revised as of May 14, 1999).

7. The discharger shall have and implement an acceptable written quality assurance (QA) plan for laboratory analyses. Duplicate chemical analyses must be conducted on a minimum of ten percent (10%) of the samples, or at least one sample per month, whichever is greater. A similar frequency shall be maintained for analyzing spiked samples. When requested by the Regional Board or EPA, the discharger will participate in the NPDES discharge monitoring report QA performance study.

8. Discharge monitoring data shall be submitted in a format acceptable to the Regional Board and EPA. Specific reporting format may include preprinted forms and/or electronic media. The results of all monitoring required by this Order shall be reported to the Regional Board, and shall be submitted in such a format as to allow direct comparison with the limitations and requirements of this Order. The hard copy of submitted reports shall serve as the official submittal.

9. The discharger shall tabulate the monitoring data to clearly illustrate compliance and/or noncompliance with the requirements of the Order.

10. The discharger shall multiply each measured or estimated congener concentration by its respective toxic equivalency factor (TEF) as shown below and report the sum of these values. The discharger shall use the U.S. EPA approved test method 1613 for dioxins and furans. The discharger shall report the analytical results of the monitoring for each congener, including the quantifiable limit (approved reporting limit) and the method detection limit, and the measured or estimated concentration.

Toxic Equivalency Factors for 2,3,7, 8-TCDD Equivalents	
Congener	TEF
2,3,7,8-TetraCDD	1
1,2,3,7,8-PentaCDD	1.0
1,2,3,4,7,8-HexaCDD	0.1
1,2,3,6,7,8-HexaCDD	0.1
1,2,3,7,8,9-HexaCDD	0.1
1,2,3,4,6,7,8-HeptaCDD	0.01
OctaCDD	0.0001
2,3,7,8-TetraCDF	0.1
1,2,3,7,8-PentaCDF	0.05
2,3,4,7,8-PentaCDF	0.5

Toxic Equivalency Factors for 2,3,7, 8-TCDD Equivalents	
1,2,3,4,7,8-HexaCDF	0.1
1,2,3,6,7,8-HexaCDF	0.1
1,2,3,7,8,9-HexaCDF	0.1
2,3,4,6,7,8-HexaCDF	0.1
1,2,3,4,6,7,8-HeptaCDF	0.01
1,2,3,4,7,8,9-HeptaCDF	0.01
OctaCDF	0.0001

11. For every item of monitoring data where the requirements are not met, the monitoring report shall include a statement discussing the reasons for noncompliance, the actions undertaken or proposed that will bring the discharge into full compliance with requirements at the earliest time, and an estimate of the date when the discharger will be in compliance. The discharger shall notify the Regional Board by letter when compliance with the time schedule has been achieved.

12. The monthly reports for June and December shall include a roster of plant personnel, including job titles, duties, and level of State certification for each individual.

13. By April 1 of each year, the discharger shall submit an annual report to the Regional Board. The report shall contain both tabular and graphical summaries of the monitoring data obtained during the previous year. In addition, the discharger shall discuss the compliance record and the corrective actions taken or planned, which may be needed to bring the discharge into full compliance with the waste discharge requirements. The annual report shall include a summary of the quality assurance (QA) activities for the previous year.

14. The discharger shall assure that records of all monitoring information are maintained and accessible for a period of at least five years from the date of the sample, report, or application. This period of retention shall be extended during the course of any unresolved litigation regarding this discharge or by the request of the Regional Board at any time. Records of monitoring information shall include:

    a. The date, exact place, and time of sampling or measurements;

    b. The individual(s) who performed the sampling, and/or measurements;

    c. The laboratory which performed the analyses;

    d. The date(s) analyses were performed;

    e. The individual(s) who performed the analyses;

    f. The analytical techniques or methods used, including any modification to those methods;

g. All sampling and analytical results, including

1) units of measurement used;
2) minimum reporting limit for the analysis (minimum level, practical quantitation level (PQL));
3) results less than the reporting limit but above the method detection limit (MDL);
4) data qualifiers and a description of the qualifiers;
5) quality control test results (and a written copy of the laboratory quality assurance plan);
6) dilution factors, if used; and
7) sample matrix type; and

h. All monitoring equipment calibration and maintenance records;

i. All original strip charts from continuous monitoring devices;

j. All data used to complete the application for this Order; and,

k. Copies of all reports required by this Order.

l. Electronic data and information generated by the Supervisory Control And Data Acquisition (SCADA) System.

15. The flow measurement system shall be calibrated at least once per year or more frequently, to ensure continued accuracy.

16. All monitoring instruments and devices used by the discharger to fulfill the prescribed monitoring program shall be properly maintained and calibrated as necessary to ensure their continued accuracy. In the event that continuous monitoring equipment is out of service for greater than a 24-hour period, the discharger shall obtain a representative grab sample each day the equipment is out of service. The discharger shall correct the cause(s) of failure of the continuous monitoring equipment as soon as practicable. In its monitoring report, the discharger shall specify the period(s) during which the equipment was out of service and if the problem has not been corrected, shall identify the steps which the discharger is taking or proposes to take to bring the equipment back into service and the schedule for these actions.

17. Monitoring and reporting shall be in accordance with the following:

a. Samples and measurements taken for the purpose of monitoring shall be representative of the monitored activity.

b. The monitoring and reporting of influent, effluent, and sludge shall be done, at a minimum, on an annual basis, and more frequently, depending on the nature and effect of the sewage sludge use or disposal practice, or as specified in this Order.

c. All monitoring, including that of sludge use or disposal, must be conducted according to test procedures approved under 40 CFR 136 or as specified in this Order.

d. The results of any analysis of samples taken more frequently than required at the locations specified in this M&RP shall be reported to the Regional Board.

e. A "grab" sample is defined as any individual sample collected in less than 15 minutes.

f. A composite sample is defined as a combination of no fewer than eight individual grab samples obtained over the specified sampling period. The volume of each individual grab sample shall be proportional to the discharge flow rate at the time of sampling. The compositing period shall equal the specific sampling period, or 24 hours, if no period is specified.

g. Daily samples shall be collected on each day of the week.

h. Monthly samples shall be collected on any representative day of each month.

i. Quarterly samples shall be collected in January, April, July, and October.

j. Semi-annual samples shall be collected in June and December.

k. Annual samples shall be collected in accordance with the following schedule:

Year	Annual Samples
2004	October
2005	April
2006	July
2007	October
2008	January
2009	April

18. All reports shall be signed by either a principal executive officer or ranking elected or appointed official or a duly authorized representative of a principal executive officer or ranking elected or appointed official. A duly authorized representative of a principal executive officer or ranking elected or appointed official may sign the reports only if;

a. The authorization is made in writing by a principal executive officer or ranking elected or appointed official,

b. The authorization specifies either an individual or a position having responsibility for the overall operation of the regulated facility or activity, such as the position of plant manager, superintendent, or position of equivalent responsibility. (A duly authorized representative may thus be either a named individual or any individual occupying a named position), and

c. The written authorization is submitted to the Regional Board.

Each person signing a report required by this Order or other information requested by the Regional Board shall make the following certification:

"I certify under penalty of law that this document and all attachments were prepared under my direction or supervision in accordance with a system designed to assure that qualified personnel properly gather and evaluate the information submitted. Based on my inquiry of the person or persons who manage the system, or those persons directly responsible for gathering the information, the information submitted is, to the best of my knowledge and belief, true, accurate[5], and complete. I am aware that there are significant penalties for submitting false information, including the possibility of fine and imprisonment for knowing violations."

19. The discharger, unless otherwise specified elsewhere in this M&RP, shall deliver a copy of each monitoring report in the appropriate format to:

a. California Regional Water Quality Control Board
Santa Ana Region
3737 Main Street, Suite 500
Riverside, CA 92501-3348, and

b. NPDES/DMR
CWA Compliance Office, WTR-7
Water Division
75 Hawthorne Street
San Francisco, CA 94105

B. INFLUENT MONITORING:

1. Sampling stations shall be established and located upstream of any in-plant return flows and where a representative sample of the influent to the treatment facility can be obtained. The date and time of sampling (as appropriate) shall be reported with the analytical values determined.

2. The following shall constitute the influent monitoring program:

Constituent	Units	Type of Sample	Minimum Frequency of Sampling & Analysis
Flow	mgd	Recorder/Totalizer	Continuous
Specific Conductance	µmhos/cm	Recorder	"

5 *For the purposes of this certification the term "accurate" refers to the veracity of the information submittal and not to the performance characteristics of the measurement system.*

Constituent	Units	Type of Sample	Minimum Frequency of Sampling & Analysis
pH	pH units	Recorder	Continuous
TOC	mg/l	Composite	Weekly
Suspended Solids	mg/l	Composite	Weekly
Total Dissolved Solids	mg/l	Composite	Weekly
Ammonia-Nitrogen	"	Grab	"
Total Inorganic Nitrogen	mg/l	"	Weekly
Bis (2-ethylhexyl) phthalate	µg/l	Grab	Monthly
Chlorpyrifos	"	"	"
Diazinon	µg/l	Grab	Monthly
Hexachlorocyclohexane – gamma (Lindane)	"	"	"
Chromium VI or Total Chromium	"	Composite	"
Total Recoverable Selenium	"	Composite	"
Cyanide (Free)[6]	µg/l	Grab	Monthly
Boron	mg/l	Composite	Quarterly
Chloride	"	"	"
Fluoride	"	"	"
Sodium	"	"	"
Sulfate	"	"	"
Total Hardness	mg/l	"	"
Arsenic	µg/l	"	"
Total Recoverable Copper	"	"	"
Total Recoverable Cadmium	"	"	"
Total Recoverable Lead	"	"	"
Total Recoverable Mercury	"	"	"
Total Recoverable Nickel	"	"	"

6 *Measured as weak acid dissociable cyanide.*

Constituent	Units	Type of Sample	Minimum Frequency of Sampling & Analysis
Total Recoverable Silver	"	"	"
Total Recoverable Zinc	"	"	"
Volatile organic portion of remaining EPA Priority Pollutants[7] (See Attachment "B")	µg/l	Grab	Annually
Remaining EPA Priority Pollutants[8] (See Attachment "B")	µg/l	Composite	Annually

C. EFFLUENT MONITORING:

1. Sampling station(s) shall be established at the point(s) of discharge and shall be located where representative samples of the effluent can be obtained.

2. The following shall constitute the effluent monitoring program for the discharge of tertiary treated wastewater without 20:1 dilution (receiving water flow[9]:wastewater flow):

Constituent	Units	Type of Sample	Minimum Frequency of Sampling & Analysis
Flow	mgd	Recorder/Totalizer	Continuous
Specific Conductance	µmhos/cm	Composite	Daily
pH	pH units	"	See Note (1), below
Chlorine (Combined Residual)	mg/l	"	"
CT	mg-minutes/l	See notes (3) and (4), below	See notes (3) and (4), below
Turbidity Four-hour Results Daily Average Daily 95th Percentile	NTU[10]	Recorder	See note (1), below

7 *Remaining EPA priority pollutants are those pollutants listed in Attachment "B" that are not specifically listed in the monitoring program table.*

8 *Remaining EPA priority pollutants are those pollutants listed in Attachment "B" that are not volatile organics and pollutants not specifically listed in this monitoring program table.*

9 *Exclusive of discharges to surface water from upstream publicly owned treatment works.*

10 *NTU = Nephelometric Turbidity Units.*

Constituent	Units	Type of Sample	Minimum Frequency of Sampling & Analysis
Coliform Organisms	MPN/100mL[11]	Grab	Daily (see note (2), below)
TOC	mg/l	Composite	Daily
Temperature	°C	Grab	Weekly
BOD_5	mg/l	Composite	Daily
Suspended Solids	"	Composite	Daily
Ammonia-Nitrogen	mg/l	Grab	Weekly
Toxicity Monitoring	TUc	(See Section D., Below)	(See Section D., Below)
Bicarbonate	mg/l	Composite	Monthly
Boron	mg/l	Composite	Monthly
Calcium	"	"	"
Carbonate	"	"	"
Chloride	mg/l	Composite	Monthly
Fluoride	"	"	"
Magnesium	"	"	"
Nitrate	"	"	"
Sodium	"	"	"
Sulfate	"	"	"
Total Dissolved Solids[12]	"	"	"
Total Hardness	"	"	"
Total Inorganic Nitrogen	"	"	"
Iron	"	"	"
Manganese	"	"	"
Total Recoverable Cadmium	µg/l	"	"
Chromium VI or Total Chromium	"	"	"
Total Recoverable Copper	"	"	"
Cyanide (free)	"	Grab	
Total Recoverable Lead	"	Composite	"
Total Recoverable Mercury	"	"	"
Total Recoverable Selenium	"	"	"
Total Recoverable Silver	"	"	"
Total Recoverable Zinc	"	"	"
Bis (2-ethylhexyl) phthalate	"	Grab	Quarterly (see C.5., below)

11 *MPN/100mL = Most Probable Number per 100 milliliters*

12 *Measured immediately after secondary treatment and in effluent discharged to surface waters.*

Constituent	Units	Type of Sample	Minimum Frequency of Sampling & Analysis
Hexachlorocyclohexane-gamma	µg/l	"	Quarterly (see C.5., below)
Tetrachloroethylene	"	"	"
Endusulfan I	"	"	"
Halomethanes[13]	µg/l	Grab	"
Arsenic	µg/l	Composite	Quarterly (see C.5., below)
Barium	µg/l	Composite	Quarterly (see C.5., below)
Benzene	"	Grab	"
Acrylonitrile	"	"	"
Benzidine	"	"	"
Cobalt	"	Composite	"
Total Recoverable Nickel	"	"	"
Phenol	"	"	"
Benzo (a) anthracene	"	"	"
Benzo (a) pyrene	"	"	"
Benzo (b) fluoranthene	"	"	"
Benzo (k) fluoranthene	"	"	"
Chrysene	"	"	"
Dibenzo (a,h) anthracene	"	"	"
3,3-Dichlorobenzidine	"	"	"
1,2-Diphenylhydrazine	"	"	"
Hexachlorobenzene	"	"	"
Indeno(1,2,3-cd)Pyrene	"	"	"
Aldrin	"	"	"
BHC Alpha	"	"	"
Chlordane	"	"	"
4,4'-DDT	"	"	"
4,4'-DDE	"	"	"
4,4'-DDD	"	"	"
Dieldrin	"	"	"
Endrin	"	"	"
Endrin Aldehyde	"	"	"
Heptachlor	"	"	"
Heptachlor Epoxide	"	"	"
PCB 1016	"	"	"
PCB 1221	"	"	"
PCB 1232	"	"	"
PCB 1242	"	"	"
PCB 1248	"	"	"

13 *Halomethanes shall mean the sum of bromoform, bromomethane (methyl bromide), chloromethane (methyl chloride), chlorodibromomethane, and dichlorobromomethane.*

Constituent	Units	Type of Sample	Minimum Frequency of Sampling & Analysis
PCB 1254	µg/l	Composite	Quarterly (see C.5., below)
PCB 1260	"	"	"
Toxaphene	"	"	"
2,3,7,8-TetraCDD	ρg/l (parts-per-quadrillion)	Composite	Semi-annual (see A.10. & A.17.j.)
1,2,3,7,8-PentaCDD	"	"	"
1,2,3,4,7,8-HexaCDD	"	"	"
1,2,3,6,7,8-HexaCDD	"	"	"
1,2,3,7,8,9-HexaCDD	"	"	"
1,2,3,4,6,7,8-HeptaCDD	"	"	"
OctaCDD	"	"	"
2,3,7,8-TetraCDF	"	"	"
1,2,3,7,8-PentaCDF	"	"	"
2,3,4,7,8-PentaCDF	"	"	"
1,2,3,4,7,8-HexaCDF	"	"	"
1,2,3,6,7,8-HexaCDF	"	"	"
1,2,3,7,8,9-HexaCDF	"	"	"
2,3,4,6,7,8-HexaCDF	"	"	"
1,2,3,4,6,7,8-HeptaCDF	"	"	"
1,2,3,4,7,8,9-HeptaCDF	"	"	"
OctaCDF	ρg/l (parts-per-quadrillion)	Composite	Semi-annual (see A.10 & A.17.j.)
Perchlorate	µg/l	grab	Annually (see C.6., below)
Volatile organic portion of remaining EPA Priority Pollutants[7] (See Attachment "B")	µg/l	Grab	Annually (see C.6., below)
Remaining EPA Priority Pollutants[8] (See Attachment "B")	µg/l	Composite	Annually (see C.6., below)

Notes:

(1) Turbidity analysis shall be continuous, performed by a continuous recording turbidimeter. In the case of equipment failure for continuous monitoring devices for pH and turbidity, compliance with the effluent limits shall be determined by averaging the levels of grab samples taken at a minimum of four-hour intervals over a 24-hour period. The results of the daily average turbidity determinations shall be reported monthly.

(2) Samples for total coliform bacteria shall be collected at least daily. Samples shall be taken from the disinfected effluent.

(3) CT shall be calculated based on one-hour peak flow within 24-hour period and corresponding chlorine residual at that time.

(4) Modal contact time and filter loading rate shall be calculated based on one-hour peak flow within a 24-hour period.

3. The following shall constitute the effluent monitoring program for the discharge of secondary treated and disinfected wastewater when 20:1 dilution is present in the receiving water:

FOR DISCHARGES WHEN 20:1 DILUTION IS PRESENT IN THE RECEIVING WATERS			
Constituent	**Units**	**Type of Sample**	**Minimum Frequency of Sampling & Analysis**
Flow	MGD	Recorder/Totalizer	Continuous
CT	mg-minutes/l	Recorder	"
Chlorine Residual	mg/l	Recorder	Continuous
Suspended Solids	mg/l	grab	Daily
BOD_5	"	"	"
pH	pH units	"	"
Total Coliform	MPN/100ml	grab	Daily
Total Dissolved Solids	mg/l	"	Monthly
Total Hardness	"	grab	Monthly

4. Whenever there is a discharge of secondary treated and disinfected wastewater, the discharger shall submit documentation that 20:1 dilution existed in Chino Creek at the time of the discharge. Documentation shall include the date(s), time(s), and duration(s) of the discharge, the corresponding flow in the receiving stream during the discharge, and the climatic condition in the area during the discharge. This documentation shall be submitted with the required monthly report.

5. The monitoring frequency for those priority pollutants that are detected during the required quarterly monitoring at a concentration greater than fifty percent of the most stringent applicable receiving water objectives (freshwater or human health (consumption of organisms only) as specified for that pollutant[14] in 40 CFR 131.38[15]) shall be accelerated to monthly. To return to the monitoring frequency specified, the discharger shall request and receive approval from the Regional Board's Executive Officer or designee.

6. The monitoring frequency for those priority pollutants that are detected during the required annual monitoring at a concentration greater than fifty percent of the most stringent applicable receiving water objectives (freshwater or human health (consumption of organisms only) as specified for that pollutant in 40 CFR 131.38) shall be accelerated to quarterly for one year following detection. Perchlorate monitoring shall be accelerated to quarterly if the result of annual monitoring is at or above 4 µg/l. To return to the monitoring frequency specified, the discharger shall request and receive approval from the Regional Board's Executive Officer or designee.

D. TOXICITY MONITORING REQUIREMENTS:

1. The discharger shall conduct critical life stage chronic toxicity testing in accordance with Method 1002.0 - Survival and Reproduction test for water flea, Ceriodaphnia dubia as specified in "Short-term Methods for Estimating the Chronic Toxicity of Effluents and Receiving Waters to Freshwater Organisms", Fourth Edition, Environmental Monitoring Systems Laboratory, U.S. Environmental Protection Agency 2002, Cincinnati, Ohio (October 2002, EPA-821-R-02-013).

2. The discharger shall establish procedures to ensure that the toxicity testing laboratory notifies the discharger of the results of toxicity testing within twenty-four hours of completing such tests.

3. A minimum of one monthly chronic toxicity test shall be conducted on 24-hour composite samples.

4. The discharger shall increase the frequency of chronic toxicity testing to every two weeks whenever any test result exceeds 1.0 TUc. The first test under the accelerated schedule shall be conducted within two weeks of receiving notice of the test which exceeds 1.0 TUc, and every two weeks thereafter. The discharger may resume the regular test schedule when two consecutive chronic toxicity tests result in 1.0 TUc, or when the results of the Initial Investigation Reduction Evaluation conducted by the discharger have adequately addressed the identified toxicity problem.

---

14 *For those priority pollutants without specified criteria values, accelerated monitoring is not required.*

15 *See Federal Register/ Vol. 65, No. 97 / Thursday, May 18, 2000 / Rules and Regulations.*

5. The presence of chronic toxicity shall be estimated as specified in Short-Term Methods for Estimating the Chronic Toxicity of Effluents and Receiving Waters to Freshwater Organisms. Fourth Edition. EPA-821-R-02-013.

6. Results for both survival and reproduction endpoints shall be reported in TUc, where TUc = 100/NOEC or $100/IC_p$ or EC_p (p is the percent effluent). The no observed effect concentration (NOEC) is the highest concentration of toxicant to which organisms are exposed in a chronic test, that causes no observable adverse effect on the tests organisms (e.g., the highest concentration of toxicant to which the values for the observed responses are not statistically significant different from the controls). The inhibition concentration (IC) is a point estimate of the toxicant concentration that causes a given percent reduction in a non-quantal biological measurement (e.g., reproduction or growth) calculated from a continuous model (the EPA Interpolation Method). The effective concentration (EC) is a point estimate of the toxicant concentration that would cause a given percent reduction in quantal biological measurement (e.g., larval development, survival) calculated from a continuous model (e.g., probit).

7. Additional Testing Requirements.

   a. A series of at least five dilutions and a control will be tested. The series shall be within 60% to 100% effluent concentration.

   b. If organisms are not cultured in-house, concurrent testing with reference toxicants shall be conducted. Where organisms are cultured in-house, monthly reference toxicant testing is sufficient. Reference toxicants shall also be conducted using the same test conditions as the effluent toxicity test (e.g., same test duration, etc).

   c. If either of the reference toxicant test or the effluent tests do not meet all test acceptability criteria as specified in the manual[16], then the discharger must re-sample and re-test within 14 days or as soon as the discharger receives notification of failed tests.

   d. Control and dilution water should be receiving water or lab water, as appropriate, as described in the manual. If the dilution water used is different from the culture water, a second control, using culture water shall also be used.

8. Quality Assurance/Control:

   a. A quality assurance/quality control (QA/QC) program shall be instituted to verify the results of the effluent toxicity monitoring program. The QA/QC program shall include but shall not be limited to the following: (1) Selection of an independent testing laboratory; (2) Approval by the Regional Board's Executive Officer or Executive Officer's designee of the independent testing laboratory; (3) Once during the year, the discharger shall split samples with the independent laboratory for conducting chronic toxicity testing; (4) Results from the independent laboratory shall be submitted to the Regional Board and the discharger for evaluation; (5) The discharger shall review the test acceptability criteria in accordance with the EPA test protocols, EPA-821-R-02-013.

---

16 *Refers to USEPA Manual "Short-Term Methods for Estimating the Chronic Toxicity of Effluents and Receiving Waters to Freshwater Organisms. Fourth Edition. EPA-821-R-02-013.*

b. Results from the independent laboratory of the annual QA/QC split samples are to be used for Quality Assurance/Quality Control (QA/QC) purposes only and not for purposes of determining compliance with other requirements of this Order.

9. The use of alternative methods for measuring chronic toxicity may be considered by the Executive Officer on a case–by-case basis. The use of a different test species, in lieu of conducting the required test species may be considered/approved by the Executive Officer on a case-by case basis upon submittal of the documentation supporting discharger's determination that a different species is more sensitive and appropriate.

10. Reporting: Results of all toxicity testing conducted within the month following the reporting period shall be submitted monthly in accordance with "Short-term Methods for Estimating the Chronic Toxicity of Effluents and Receiving Waters to Freshwater Organisms", Fourth Edition, Environmental Monitoring Systems Laboratory, U.S. Environmental Protection Agency 2002, Cincinnati, Ohio (October 2002, EPA-821-R-02-013). The report shall include a determination of the median value of all chronic toxicity testing results conducted during the two previous months.

11. Whenever an Initial Investigation Reduction Evaluation is conducted, the results of the evaluation shall be submitted upon completion. In addition, monthly status reports shall be submitted as part of the discharger's monitoring report for the previous month.

E. BIOSOLIDS MONITORING:

1. The discharger shall maintain a permanent log of solids hauled away from the treatment facilities for use/disposal elsewhere, including the date hauled, the volume or weight (in dry tons), type (screening, grit), and destination. This information shall be reported quarterly.

F. RECEIVING WATER MONITORING:

1. The following receiving water stations shall be monitored for the indicated constituents:

Station A: Chino Creek at suitable location within 100 feet upstream of the point of discharge or an alternate location approved by the Executive Officer.
Station B: Chino Creek within 500 feet downstream of the point of discharge or an alternate location approved by the Executive Officer.

Constituent	Unit	Type of Sample	Minimum Frequency of Sampling and Analysis
Dissolved Oxygen	mg/l	Grab	weekly
pH	pH units	"	"
Temperature	^{0}C	"	"
Total Inorganic Nitrogen	mg/l	"	Every two weeks

Station A:	Chino Creek at suitable location within 100 feet upstream of the point of discharge or an alternate location approved by the Executive Officer.
Station B:	Chino Creek within 500 feet downstream of the point of discharge or an alternate location approved by the Executive Officer.

Constituent	**Unit**	**Type of Sample**	**Minimum Frequency of Sampling and Analysis**
Nitrate -Nitrogen	mg/l	"	Every two weeks
Total Dissolved Solids	mg/l	"	monthly
Total Hardness	mg/l	"	"
A check for the presence of any color changes, foam, deposition of material, or odor in the receiving water from the discharge shall be made daily at station B.			

2. At station A, all the priority pollutants listed in Attachment "B" shall be monitored quarterly. A grab sample shall be taken, analyzed and test results shall be reported in micrograms/liter (ug/l) by the last day of the month following the monitoring period.

3. Unless otherwise directed by the Regional Board Executive Officer, the discharger shall implement the approved plan for the annual sampling and testing of mercury levels in fish flesh samples collected from the Santa Ana River (see Section C. 4. of the Order). The frequency of monitoring and submission of reports shall be as stipulated in the approved plan.

G. WATER SUPPLY MONITORING:

1. In August of each year, a sample of each source of the water supplied to the sewered area shall be obtained and analyzed for the following constituents:

Boron	Specific Conductance
Chloride	Sodium
Nitrate	Total Dissolved Solids
pH	Total Hardness

2. All of the above constituents shall be expressed in "mg/l" except specific conductance and pH, which shall be expressed in "micromhos/cm" and "pH units," respectively.

3. Monthly reports shall be submitted stating the amount (in percentage or acre-feet) supplied to the sewered area from each source of water and the resulting flow-weighted water supply quality for constituents specified in Section G.1. above.

H. PRETREATMENT MONITORING AND REPORTING:

1. The discharger shall submit to the Regional Board and the EPA Region 9, a quarterly compliance status report. The quarterly compliance status reports shall cover the periods January 1 - March 31, April 1 - June 30, July 1 - September 30, and October 1 -December 31. Each report shall be submitted by the end of the month following the quarter, except that the report for October 1 - December 31 may be included in the annual report. This quarterly reporting requirement shall commence for the first full quarter following issuance of this Order. The reports shall identify:

    a. All significant industrial users (SIUs) which violated any standards or reporting requirements during that quarter;
    b. The violations committed (distinguish between categorical and local limits);
    c. The enforcement actions undertaken; and
    d. The status of active enforcement actions from previous periods, including closeouts (facilities under previous enforcement actions which attained compliance during the quarter).

2. Annually, the discharger shall submit a report to the Regional Board, the State Water Resources Control Board and the EPA Region 9 describing the pretreatment activities within the service area during the previous year. In the event that any control authority within the service area is not in compliance with any conditions or requirements of this Order or their approved pretreatment program (such as due to industrial user discharges, interjurisdictional agency agreement implementation issues, or other causes) then the discharger shall also include the reasons for non-compliance and state how and when the discharger and the control authority shall comply with such conditions and requirements. This annual report shall cover operations from July 1 through June 30 and is due on September 1 of the following year. The report shall contain, but not be limited to, the following information:

    a. A summary of analytical results from representative, flow-proportioned, 24-hour composite sampling of the POTW's influent and effluent wastewaters for those pollutants which are known or suspected to be discharged by industrial users (IUs) as identified by EPA under Section 307(a) of the CWA. The summary will include the result of annual full priority pollutant scan, with quarterly samples analyzed only for those pollutants[17] detected in the full scan. The discharger shall also provide any influent or effluent monitoring data for non-priority pollutants which the discharger believes may be causing or contributing to Interference, Pass Through or adversely impacting sludge quality. Sampling and analysis shall be performed in accordance with the techniques prescribed in 40 CFR 136 and amendments thereto.

    b. A discussion of any upset, interference, or pass-through incidents at the treatment plant (if any), which the discharger knows or suspects were caused by IUs of the POTW system. The discussion shall include the following:

---

17 *The discharger is not required to analyze for asbestos.*

1) The reasons why the incidents occurred, the corrective actions taken, and, if known, the name and address of the IU(s) responsible.

2) A review of the applicable pollutant limitations to determine whether any additional limitations, or changes to existing requirements, may be necessary to prevent pass through, interference or noncompliance with sludge disposal requirements.

c. A complete and updated list of the discharger's significant industrial users (SIUs), including names, Standard Industrial Classification (SIC) code(s) and addresses, and a list of any SIU deletions and/or additions. The discharger shall provide a brief explanation for each deletion. The SIU list shall identify the SIUs subject to Federal Categorical Standards by specifying which set(s) of standards are applicable to each SIU. The list shall also indicate which SIUs are subject to local limitations more stringent than Federal Categorical Standards and those which are not subject to local limits.

d. A list or table characterizing the industrial compliance status of each SIU, including:

(1) SIU name;

(2) Industrial category;

(3) The type (processes) of wastewater treatment in place;

(4) Number of samples taken by the POTW during the year;

(5) Number of samples taken by the SIU during the year;

(6) Whether all needed certifications (if allowed) were provided by SIUs which have limits for total toxic organics;

(7) Federal and Regional Standards violated during the year, reported separately;

(8) Whether the SIU at any time in the year was in Significant Noncompliance (SNC)[18], as defined by 40 CFR 403.12 (f)(2)(vii); and

(9) A summary of enforcement actions against the SIU taken during the year, including the type of action, final compliance date, and amount of fines assessed/collected (if any). Proposed actions, if known, should be included.

(10) Number of inspections conducted at each SIU during the year.

e. A compliance summary table which includes:

(1) SIU's which were in SNC at any time during the year;

---

18 *SNC is determined at the beginning of each quarter based on data of the previous six months.*

(2) The total number of SIUs which are in SNC with pretreatment compliance schedules during the year;

(3) The total number of notices of violation and administrative orders issued against SIUs during the year;

(4) The total number of civil and criminal judicial actions filed against SIUs during the year;

(5) The number of SIUs which were published as being in SNC during the year; and

(6) The number of IUs from which penalties were collected during the year.

f. A short description of any significant changes in operating the pretreatment program which differ from the previous year including, but not limited to changes concerning:

(1) the program's administrative structure;

(2) local industrial discharge limitations;

(3) monitoring program or monitoring frequencies;

(4) legal authority or enforcement policy;

(5) funding mechanisms; and

(6) resource requirements and/or staffing levels.

g. A summary of the annual pretreatment budget, including the cost of pretreatment program functions and equipment purchases.

h. A summary of public participation activities to involve and inform the public.

i. A description of any changes in sludge disposal methods and a discussion of any concerns not described elsewhere in the report.

j. The number of industrial users that the discharger has notified regarding Baseline Monitoring Reports and the number of industrial user responses.

k. A summary of activities conducted implementing and enforcing inter-jurisdictional agreements between the contracting agencies.

3. The discharger shall submit the annual pretreatment report to EPA Region 9, the State Board and the Regional Board at the following addresses:

a. Regional Administrator
U.S. Environmental Protection Agency
Region 9 - Attention WTR-7
75 Hawthorne Street
San Francisco, CA 94105

b. State Water Resources Control Board
Division of Water Quality, Pretreatment Unit
P.O. Box 944213
Sacramento, CA 94244-2130

c. Gerard J. Thibeault, Executive Officer
California Regional Water Quality Control Board
Santa Ana Region
3737 Main Street, Suite 500
Riverside, CA 92501-3348

4. The discharger shall submit the quarterly compliance status reports to EPA Region 9 and the Regional Board.

I. REPORTING:

1. Monitoring reports shall be submitted by the dates in the following schedule:

Report	*Reporting*	*Report Due Date*
Influent and effluent constituents	Monthly	By the 30th day of the month following the monitoring period
Receiving Water Monitoring	"	"
Toxicity Testing	See Section D., above	By the 30th day of the month following the monitoring period
Water Supply Quality	Monthly	By the 60th day of the month following the monitoring period
Biosolids Monitoring	Quarterly	By the 30th day of the month following the monitoring period
Fish Flesh Mercury Testing	Annually	April 1, each year
Quarterly Pretreatment Report	Quarterly	By the 30th day of the month following the monitoring period
Annual Pretreatment Report	Annually	September 1, each year
Annual Report per Section A.13., above	Annually	April 1, each year
Annual Water Supply Parameters from each source	Annually	April 30 of each year

2. The following reports shall also be submitted by the dates indicated:

REQUIRED REPORTS OF ORDER NO. R8-2004-0020	
Report	**Report Due Date**
Report per Section H.2.	October 1, 2004
Report per Section H.3.	October 1, 2004
Report per Section H.4.	October 1, 2004
Report per Section H.5.	December 1, 2004
Report per Section H.6.	March 1, 2005
Report per Section H.7.	March 1, 2005
Report per Section H.8.	See Section H. 8. of the Order
Report per Section H.9.	See Section H. 9. of the Order
Report per Section H.10.	See Section H.10. of the Order
Report per Section H.11.	See Section H.11. of the Order
Report per Section H.12.	See Section H.12. of the Order
Report per Section H.13.	See Section H.13. of the Order
Report per Section H.14.	Within 90-days, see Section H.14. of the Order
Report per Section H.15.	180-days before any plant changes (see Section H.15. of the Order)
Non-compliance Reporting per Section H.16.	Within 24-hours followed by a written report within 5-working days (see Section H.16. of the Order)
This table attempts to summarize all of the special reports that are required to be submitted in accordance with Order No. R8-2004-0020; however, the omission of a report from this table does not absolve the discharger from the requirement to submit that report.	

Gerard J. Thibeault
Executive Officer

August 13, 2004

MINIMUM LEVELS IN PPB (µg/l)

Table 1- VOLATILE SUBSTANCES[1]	GC	GCMS
Acrolein	2.0	5
Acrylonitrile	2.0	2
Benzene	0.5	2
Bromoform	0.5	2
Carbon Tetrachloride	0.5	2
Chlorobenzene	0.5	2
Chlorodibromomethane	0.5	2
Chloroethane	0.5	2
Chloroform	0.5	2
Dichlorobromomethane	0.5	2
1,1 Dichloroethane	0.5	1
1,2 Dichloroethane	0.5	2
1,1 Dichloroethylene	0.5	2
1,2 Dichloropropane	0.5	1
1,3 Dichloropropylene (volatile)	0.5	2
Ethylbenzene	0.5	2
Methyl Bromide (*Bromomethane*)	1.0	2
Methyl Chloride (*Chloromethane*)	0.5	2
Methylene Chloride (*Dichloromethane*)	0.5	2
1,1,2,2 Tetrachloroethane	0.5	1
Tetrachloroethylene	0.5	2
Toluene	0.5	2
trans-1,2 Dichloroethylene	0.5	1
1,1,1 Trichloroethane	0.5	2
1,1,2 Trichloroethane	0.5	2
Trichloroethylene	0.5	2
Vinyl Chloride	0.5	2
1,2 Dichlorobenzene (volatile)	0.5	2
1,3 Dichlorobenzene (volatile)	0.5	2
1,4 Dichlorobenzene (volatile)	0.5	2

Selection and Use of Appropriate ML Value:

ML Selection: When there is more than one ML value for a given substance, the discharger may select any one of those ML values, and their associated analytical methods, listed in Attachment "A" that are below the calculated effluent limitation for compliance determination. If no ML value is below the effluent limitation, then the discharger shall select the lowest ML value, and its associated analytical method, listed in this Attachment "A".

ML Usage: The ML value in Attachment "A" represents the lowest quantifiable concentration in a sample based on the proper application of all method-based analytical procedures and the absence of any matrix interferences. Assuming that all method-specific analytical steps are followed, the ML value will also represent, after the appropriate application of method-specific factors, the lowest standard in the calibration curve for that specific analytical technique. Common analytical practices sometimes require different treatment of the sample relative to calibration standards.

Note: chemical names in parenthesis and italicized is another name for the constituent.

---

[1] *The normal method-specific factor for these substances is 1, therefore, the lowest standard concentration in the calibration curve is equal to the above ML value for each substance.*

MINIMUM LEVELS IN PPB (µg/l)

Table 2 – Semi-Volatile Substances[2]	GC	GCMS	LC
2-Chloroethyl vinyl ether	1	1	
2 Chlorophenol	2	5	
2,4 Dichlorophenol	1	5	
2,4 Dimethylphenol	1	2	
4,6 Dinitro-2-methylphenol	10	5	
2,4 Dinitrophenol	5	5	
2- Nitrophenol		10	
4- Nitrophenol	5	10	
4 Chloro-3-methylphenol	5	1	
2,4,6 Trichlorophenol	10	10	
Acenaphthene	1	1	0.5
Acenaphthylene		10	0.2
Anthracene		10	2
Benzidine		5	
Benzo (a) Anthracene (*1,2 Benzanthracene*)	10	5	
Benzo(a) pyrene (*3,4 Benzopyrene*)		10	2
Benzo (b) Flouranthene (*3,4 Benzofluoranthene*)		10	10
Benzo(g,h,i)perylene		5	0.1
Benzo(k)fluoranthene		10	2
bis 2-(1-Chloroethoxyl) methane		5	
bis(2-chloroethyl) ether	10	1	
bis(2-Chloroisopropyl) ether	10	2	
bis(2-Ethylhexyl) phthalate	10	5	
4-Bromophenyl phenyl ether	10	5	
Butyl benzyl phthalate	10	10	
2-Chloronaphthalene		10	
4-Chlorophenyl phenyl ether		5	
Chrysene		10	5
Dibenzo(a,h)-anthracene		10	0.1
1,2 Dichlorobenzene (semivolatile)	2	2	
1,3 Dichlorobenzene (semivolatile)	2	1	
1,4 Dichlorobenzene (semivolatile)	2	1	
3,3' Dichlorobenzidine		5	
Diethyl phthalate	10	2	
Dimethyl phthalate	10	2	
di-n-Butyl phthalate		10	
2,4 Dinitrotoluene	10	5	
2,6 Dinitrotoluene		5	
di-n-Octyl phthalate		10	
1,2 Diphenylhydrazine		1	
Fluoranthene	10	1	0.05
Fluorene		10	0.1
Hexachloro-cyclopentadiene	5	5	
1,2,4 Trichlorobenzene	1	5	

MINIMUM LEVELS IN PPB (µg/l)

Table 2 - SEMI-VOLATILE SUBSTANCES[2]	GC	GCMS	LC	COLOR
Pentachlorophenol	1	5		
Phenol [3]	1	1		50
Hexachlorobenzene	5	1		
Hexachlorobutadiene	5	1		
Hexachloroethane	5	1		
Indeno(1,2,3,cd)-pyrene		10	0.05	
Isophorone	10	1		
Naphthalene	10	1	0.2	
Nitrobenzene	10	1		
N-Nitroso-dimethyl amine	10	5		
N-Nitroso -di n-propyl amine	10	5		
N-Nitroso diphenyl amine	10	1		
Phenanthrene		5	0.05	
Pyrene		10	0.05	

Table 3– INORGANICS[4]	FAA	GFAA	ICP	ICPMS	SPGFAA	HYDRIDE	CVAA	COLOR	DCP
Antimony	10	5	50	0.5	5	0.5			1000
Arsenic		2	10	2	2	1		20	1000
Beryllium	20	0.5	2	0.5	1				1000
Cadmium	10	0.5	10	0.25	0.5				1000
Chromium (total)	50	2	10	0.5	1				1000
Chromium VI	5							10	
Copper	25	5	10	0.5	2				1000
Lead	20	5	5	0.5	2				10000
Mercury				0.5			0.2		
Nickel	50	5	20	1	5				1000
Selenium		5	10	2	5	1			1000
Silver	10	1	10	0.25	2				1000
Thallium	10	2	10	1	5				1000
Zinc	20		20	1	10				1000
Cyanide								5	

---

2 *With the exception of phenol by colorimetric technique, the normal method-specific factor for these substances is 1000, therefore, the lowest standards concentration in the calibration curve is equal to the above ML value for each substance multiplied by 1000.*

3 *Phenol by colorimetric technique has a factor of 1.*

4 *The normal method-specific factor for these substances is 1, therefore, the lowest standard concentration in the calibration curve is equal to the above ML value for each substance.*

MINIMUM LEVELS IN PPB (µg/l)

Table 4- PESTICIDES – PCBs[5]	GC
Aldrin	0.005
alpha–BHC (*a-Hexachloro-cyclohexane*)	0.01
beta–BHC (*b-Hexachloro-cyclohexane*)	0.005
Gamma–BHC (*Lindane; g-Hexachloro-cyclohexane*)	0.02
Delta-BHC (*d-Hexachloro-cyclohexane*)	0.005
Chlordane	0.1
4,4'-DDT	0.01
4,4'-DDE	0.05
4,4'-DDD	0.05
Dieldrin	0.01
Alpha-Endosulfan	0.02
Beta-Endosulfan	0.01
Endosulfan Sulfate	0.05
Endrin	0.01
Endrin Aldehyde	0.01
Heptachlor	0.01
Heptachlor Epoxide	0.01
PCB 1016	0.5
PCB 1221	0.5
PCB 1232	0.5
PCB 1242	0.5
PCB 1248	0.5
PCB 1254	0.5
PCB 1260	0.5
Toxaphene	0.5

Techniques:
GC - Gas Chromatography
GCMS - Gas Chromatography/Mass Spectrometry
HRGCMS - High Resolution Gas Chromatography/Mass Spectrometry (i.e., EPA 1613, 1624, or 1625)
LC - High Pressure Liquid Chromatography
FAA - Flame Atomic Absorption
GFAA - Graphite Furnace Atomic Absorption
HYDRIDE - Gaseous Hydride Atomic Absorption
CVAA - Cold Vapor Atomic Absorption
ICP - Inductively Coupled Plasma
ICPMS - Inductively Coupled Plasma/Mass Spectrometry
SPGFAA - Stabilized Platform Graphite Furnace Atomic Absorption (i.e., EPA 200.9)
DCP - Direct Current Plasma
COLOR - Colorimetric

---

5 *The normal method-specific factor for these substances is 100, therefore, the lowest standard concentration in the calibration curve is equal to the above ML value for each substance multiplied by 100.*

EPA PRIORITY POLLUTANT LIST

Metals		Acid Extractibles		Base/Neutral Extractibles (continuation)	
1.	Antimony	45.	2-Chlorophenol	91.	Hexachloroethane
2.	Arsenic	46.	2,4-Dichlorophenol	92.	Indeno (1,2,3-cd) Pyrene
3.	Beryllium	47.	2,4-Dimethylphenol	93.	Isophorone
4.	Cadmium	48.	2-Methyl-4,6-Dinitrophenol	94.	Naphthalene
5a.	Chromium (III)	49.	2,4-Dinitrophenol	95.	Nitrobenzene
5b.	Chromium (VI)	50.	2-Nitrophenol	96.	N-Nitrosodimethylamine
6.	Copper	51.	4-Nitrophenol	97.	N-Nitrosodi-N-Propylamine
7.	Lead	52.	3-Methyl-4-Chlorophenol	98.	N-Nitrosodiphenylamine
8.	Mercury	53.	Pentachlorophenol	99.	Phenanthrene
9.	Nickel	54.	Phenol	100.	Pyrene
10.	Selenium	55.	2, 4, 6 – Trichlorophenol	101.	1,2,4-Trichlorobenzene
11.	Silver	**Base/Neutral Extractibles**		**Pesticides**	
12.	Thallium	56.	Acenaphthene	102.	Aldrin
13.	Zinc	57.	Acenaphthylene	103.	Alpha BHC
Miscellaneous		58.	Anthracene	104.	Beta BHC
14.	Cyanide	59.	Benzidine	105.	Delta BHC
15.	Asbestos (not required unless requested)	60.	Benzo (a) Anthracene	106.	Gamma BHC
16.	2,3,7,8-Tetrachlorodibenzo-P-Dioxin (TCDD)	61.	Benzo (a) Pyrene	107.	Chlordane
Volatile Organics		62.	Benzo (b) Fluoranthene	108.	4, 4' - DDT
17.	Acrolein	63.	Benzo (g,h,i) Perylene	109.	4, 4' - DDE
18.	Acrylonitrile	64.	Benzo (k) Fluoranthene	110.	4, 4' - DDD
19.	Benzene	65.	Bis (2-Chloroethoxy) Methane	111.	Dieldrin
20.	Bromoform	66.	Bis (2-Chloroethyl) Ether	112.	Alpha Endosulfan
21.	Carbon Tetrachloride	67.	Bis (2-Chloroisopropyl) Ether	113.	Beta Endosulfan
22.	Chlorobenzene	68.	Bis (2-Ethylhexyl) Phthalate	114.	Endosulfan Sulfate
23.	Chlorodibromomethane	69.	4-Bromophenyl Phenyl Ether	115.	Endrin
24.	Chloroethane	70.	Butylbenzyl Phthalate	116.	Endrin Aldehyde
25.	2-Chloroethyl Vinyl Ether	71.	2-Chloronaphthalene	117.	Heptachlor
26.	Chloroform	72.	4-Chlorophenyl Phenyl Ether	118.	Heptachlor Epoxide
27.	Dichlorobromomethane	73.	Chrysene	119.	PCB 1016
28.	1,1-Dichloroethane	74.	Dibenzo (a,h) Anthracene	120.	PCB 1221
29.	1,2-Dichloroethane	75.	1,2-Dichlorobenzene	121.	PCB 1232
30.	1,1-Dichloroethylene	76.	1,3-Dichlorobenzene	122.	PCB 1242
31.	1,2-Dichloropropane	77.	1,4-Dichlorobenzene	123.	PCB 1248
32.	1,3-Dichloropropylene	78.	3,3'-Dichlorobenzidine	124.	PCB 1254
33.	Ethylbenzene	79.	Diethyl Phthalate	125.	PCB 1260
34.	Methyl Bromide	80.	Dimethyl Phthalate	126.	Toxaphene
35.	Methyl Chloride	81.	Di-n-Butyl Phthalate		
36.	Methylene Chloride	82.	2,4-Dinitrotoluene		
37.	1,1,2,2-Tetrachloroethane	83.	2-6-Dinitrotoluene		
38.	Tetrachloroethylene	84.	Di-n-Octyl Phthalate		
39.	Toluene	85.	1,2-Dipenylhydrazine		
40.	1,2-Trans-Dichloroethylene	86.	Fluoranthene		
41.	1,1,1-Trichloroethane	87.	Fluorene		
42.	1,1,2-Trichloroethane	88.	Hexachlorobenzene		
43.	Trichloroethylene	89.	Hexachlorobutadiene		
44.	Vinyl Chloride	90.	Hexachlorocyclopentadiene		

PRACTICAL QUANTITATION LEVELS FOR COMPLIANCE DETERMINATION

	Constituent	RL µg/l	Analysis Method
1	Arsenic	7.5	GF/AA
2	Barium	20	ICP/GFAA
3	Cadmium	15	ICP
4	Chromium (VI)	15.0	ICP
5	Cobalt	10.0	GF/AA
6	Copper	19.0	GF/ICP
7	Cyanide	50.0	335.2/335.3
8	Iron	100.0	ICP
9	Lead	26.0	GF/AA
10	Manganese	20.0	ICP
11	Mercury	0.5	CV/AA
12	Nickel	50.0	ICP
13	Selenium	14.0	GF/HYDRIDE GENERATION
14	Silver	16.0	ICP
15	Zinc	20	ICP
16	1,2 - Dichlorobenzene	5.0	601/602/624
17	1,3 - Dichlorobenzene	5.0	601
18	1,4 - Dichlorobenzene	5.0	601
18	2,4 - Dichlorophenol	10.0	625/604
20	4 - Chloro -3-methylphenol	10.0	625/604
21	Aldrin	0.04	608
22	Benzene	1.0	602/624
23	Chlordane	0.30	608
24	Chloroform	5.0	601/624
25	DDT	0.10	608
26	Dichloromethane	5.0	601/624
27	Dieldrin	0.10	608
28	Fluorantene	10.0	625/610
29	Endosulfan	0.50	608
30	Endrin	0.10	608
31	Halomethanes	5.0	601/624
32	Heptachlor	0.03	608
33	Hepthachlor Epoxide	0.05	608
34	Hexachlorobenzene	10.0	625
35	Hexachlorocyclohexane		
	Alpha	0.03	608
	Beta	0.03	608
	Gamma	0.03	608
36	PAH's	10.0	625/610
37	PCB	1.0	608
38	Pentachlorophenol	10.0	625/604
39	Phenol	10.0	625/604
40	TCDD Equivalent	0.05	8280
41	Toluene	1.0	602/625
42	Toxaphene	2.0	608
43	Tributyltin	0.02	GC
44	2,4,6-Trichlorophenol	10.0	625/604

California Regional Water Quality Control Board
Santa Ana Region

Terry Tamminen
Secretary for Environmental Protection

3737 Main Street, Suite 500, Riverside, California 92501-3348
(909) 782-4130 • Fax (909) 781-6288
http://www.swrcb.ca.gov/rwqcb8

Arnold Schwarzenegger
Governor

July 14, 2004

U.S. Environmental Protection Agency, Permits Issuance Section (WTR-5) - Doug Eberhardt
U.S. Army District, Los Angeles, Corps of Engineers, Regulatory Branch
U.S. Fish and Wildlife Service, Carlsbad
State Water Resources Control Board, Office of the Chief Counsel - Jorge Leon
State Water Resources Control Board, Division of Water Quality - James Maughan
State Water Resources Control Board, Division of Financial Assistance - Diana Robles
State Department of Water Resources, Glendale
State Department of Fish and Game, Long Beach
California Department of Health Services, San Bernardino
California Department of Health Services, Carpenteria – Jeff Stone
San Bernardino County Department of Environmental Health Services
San Bernardino County Flood Control Department, Water Conservation Division - Naresh Varma
Orange County Water District - Nira Yamachika
City of Chino – Public Works Department, Engineering Division – Jim Hill
City of Chino Hill – Public Works Department
Santa Ana River Discharger's Association – Roger Turner
Santa Ana Watershed Project Authority – Joseph Grindstaff
Orange County Coastkeeper
Lawyers for Clean Water

RENEWAL OF WASTE DISCHARGE AND PRODUCER/USER WATER RECYCLING REQUIREMENTS FOR INLAND EMPIRE UTILITIES AGENCY – CARBON CANYON WATER RECLAMATION FACILITY, ORDER NO. R8-2004-0020, NPDES NO. CA8000073

Ladies and Gentlemen:

Enclosed is a copy of tentative Order No. R8-2004-0020, NPDES No. CA8000073 for your review and comments. The tentative Order includes updated requirements for the discharge of tertiary treated wastewater from IEUA's Carbon Canyon Water Reclamation Facility into Reach 2 of Chino Creek, a tributary of Reach 3 of the Santa Ana River.

This Order was originally scheduled for consideration by the Regional Board on June 4, 2004, but was postponed. The revised Order will be considered by the Regional Board on August 13, 2004. The Board meeting will start at 9 a.m. and will be held at the Santa Ana City Council Chambers, 22 Civic Center Plaza, Santa Ana. Although all comments that are provided up to and during the public hearing on this matter will be considered, receipt of comments by July 26, 2004 would be appreciated so that they can be used in the formulation of the draft requirements that will be transmitted to the Board two weeks prior to the hearing. The draft requirements may contain changes resulting from comments received from you and others. To view and/ or download a copy of the draft requirements, please access our website at *http://www.swrcb.ca.gov/rwqcb8* on or after August 2, 2004.

If you have any questions, please contact Jun Martirez at (909) 782-3258 or Jane Qiu at (909) 320-2008.

Sincerely,

for Filomeno T. Martirez Jr.
Joanne E. Schneider
Environmental Program Manager

Enclosures: Tentative Order No. R8-2004-0020, Fact Sheet, M&RP No. R8-2004-0020

California Regional Water Quality Control Board
Santa Ana Region

Terry Tamminen
Secretary for Environmental Protection

3737 Main Street, Suite 500, Riverside, California 92501-3348
(909) 782-4130 • Fax (909) 781-6288
http://www.swrcb.ca.gov/rwqcb8

Arnold Schwarzenegger
Governor

July 14, 2004

Patrick Sheilds, Executive Manager of Operations
Inland Empire Utilities Agency
6075 Kimball Avenue
Chino, CA 91710

RENEWAL OF WASTE DISCHARGE AND PRODUCER/USER WATER RECYCLING REQUIREMENTS FOR INLAND EMPIRE UTILITIES AGENCY – CARBON CANYON WATER RECLAMATION FACILITY, ORDER NO. R8-2004-0020, NPDES NO. CA8000073

Dear Mr. Sheilds:

Enclosed is a copy of tentative Order No. R8-2004-0020, NPDES No. CA8000073 for your review and comments. The tentative Order includes updated requirements for the discharge of tertiary treated wastewater from IEUA's Carbon Canyon Water Reclamation Facility into Reach 2 of Chino Creek, a tributary of Reach 3 of the Santa Ana River.

This Order was originally scheduled for consideration by the Regional Board on June 4, 2004, but was postponed. The revised Order will be considered by the Regional Board on August 13, 2004. The Board meeting will start at 9 a.m. and will be held at the Santa Ana City Council Chambers, 22 Civic Center Plaza, Santa Ana. Although all comments that are provided up to and during the public hearing on this matter will be considered, receipt of comments by July 26, 2004 would be appreciated so that they can be used in the formulation of the draft requirements that will be transmitted to the Board two weeks prior to the hearing. The draft requirements may contain changes resulting from comments received from you and others. To view and/ or download a copy of the draft requirements, please access our website at *http://www.swrcb.ca.gov/rwqcb8* on or after August 2, 2004.

If you have any questions, please contact Jun Martirez at (909) 782-3258 or Jane Qiu at (909) 320-2008.

Sincerely,

for Filomeno T. Martirez Jr.
Joanne E. Schneider
Environmental Program Manager

Enclosures: Tentative Order No. R8-2004-0020, Fact Sheet, Monitoring and Reporting Program, Notice of Public Hearing, and Statement of Posting Notice