CALIFORNIA
Water Boards

EDMUND G. BROWN JR.
GOVERNOR

MATTHEW RODRIQUEZ
SECRETARY FOR
ENVIRONMENTAL PROTECTION

Santa Ana Regional Water Quality Control Board

October 31, 2016

VIA EMAIL AND U.S. MAIL – ENCLOSURE SENT VIA EMAIL ONLY

Scott Maloni, Vice President
Poseidon Water
5780 Fleet Street, Suite 140
Carlsbad, CA 92008
smaloni@poseidonwater.com

PROPOSED POSEIDON WATER HUNTINGTON BEACH DESALINATION PROJECT, APPLICATION FOR CALIFORNIA WATER CODE SECTION 13142.5(b) DETERMINATION: REQUEST FOR ADDITIONAL INFORMATION

Dear Mr. Maloni:

This letter supplements my July 29, 2016 response to Poseidon Water's (Poseidon's) June 30, 2016 application to the Santa Ana Regional Water Quality Control Board (Regional Water Board) for a Water Code section 13142.5, subdivision (b) (Water Code section 13142.5(b)) determination and a report of waste discharge (ROWD) for amendment and renewal of Order No. R8-2012-0007, NPDES No. CA8000403 (2012 Order) for the Huntington Beach Desalination Project (Project), as augmented by additional information submitted on September 1, 2016. As explained below, the Regional Water Board requires additional information for Poseidon's application for a Water Code section 13142.5(b) determination to be considered complete. For completeness, some of the background information below is repeated from my July 29, 2016 letter. I will address Poseidon's request for amendment and renewal of the 2012 Order in separate correspondence.

Regulatory Background

In 2012, the Regional Water Board adopted the 2012 Order, which conditionally permitted the Project, as proposed at that time, to intake seawater and to discharge waste in accordance with the provisions contained therein. The 2012 Order is set to expire on February 1, 2017. Due to Poseidon's material modifications to the proposed Project and State Water Resources Control Board's (State Water Board's) adoption of new requirements for desalination facilities described below, the 2012 Order is no longer valid for the Project as proposed.

On May 6, 2015, the State Water Board adopted the *Amendment to the Water Quality Control Plan for the Ocean Waters of California (Ocean Plan) Addressing Desalination Facility Intakes, Brine Discharges, and the Incorporation of Other Non-substantive Changes* (Desalination Amendment). The Office of Administrative Law approved the Desalination Amendment on January 28, 2016. The United States Environmental Protection Agency approved the portions of the Desalination Amendment that implement the federal Clean Water Act on April 7, 2016. Therefore, the Desalination Amendment is now fully in effect.

The Desalination Amendment requires the owner or operator of a proposed new or expanded desalination facility to submit sufficient information for the applicable regional water quality control board to analyze a range of feasible alternatives for the best available site, design, technology, and mitigation measures to minimize intake and mortality of all forms of marine life that may occur as the result of the construction and operation of the desalination facility, in order to comply with Water Code section 13142.5(b). (Ocean Plan, Chapter III.M.2.a(1).) The Desalination Amendment includes very specific analyses, studies, and considerations that the regional water quality control boards must evaluate in determining whether a proposed desalination facility utilizes the best available site, design, technology, and mitigation measures feasible. (Ocean Plan, Chapter III.M.2.) The Desalination Amendment also states that a regional water quality control board, in consultation with State Water Board staff, may require an owner or operator of a proposed desalination facility to provide additional studies or information, and may require the owner or operator to hire a neutral third party entity to review studies and models and make recommendations to the regional water quality control board. (Ocean Plan, Chapter III.M.2.a(1).)

The proposed Project is a "new" desalination facility. (Ocean Plan, Chapter III.M.1.b(3).) Therefore, it is necessary for Poseidon to submit the information required by the Desalination Amendment, sufficient for the Regional Water Board to conduct a new Water Code section 13142.5(b) analysis for the Project in accordance with the requirements of the Desalination Amendment. Once the Regional Water Board receives and analyzes the information required by the Desalination Amendment, it will schedule a public hearing to determine whether the Project complies with Water Code section 13142.5(b).

Poseidon's Information Submittals and Consultation Process

By letter dated February 9, 2016, the Regional Water Board requested that Poseidon submit a request for a Water Code section 13142.5(b) determination for the proposed Project. The February 9, 2016 letter included as an attachment a February 8, 2016 letter from the State Water Board to the California Coastal Commission which explained that the Desalination Amendment was in full effect for purposes of State law. The February 8, 2016 letter also proposed that staffs of the Coastal Commission, Regional Water Board, and State Water Board initiate a formal consultation to coordinate review of Poseidon's Project to determine compliance with the Desalination Amendment.

On March 15, 2016, Poseidon submitted an initial request for a Water Code section 13142.5(b) determination. Poseidon's initial submittal included a detailed matrix with Poseidon's key recommendations, conclusions, and findings as well as supporting studies and reports regarding the proposed Project's compliance with the Desalination Amendment. Over the next several months, the Regional and State Water Board staffs and California Coastal Commission staff conducted an initial review of this submittal during the formal interagency consultation process. Poseidon provided additional information, including proposed modifications to the Project, during the review and consultation process.

On June 30, 2016, Poseidon submitted its ROWD for renewal of the 2012 Order. The application also included an updated copy of materials submitted on March 15, 2016 addressing Project elements intended to comply with the Desalination Amendment and Water Code section 13142.5(b).

On July 14, 2016, representatives from the Regional Water Board, State Water Board, and California Coastal Commission met with Poseidon to provide an update on the formal consultation process and to provide initial feedback on the section 13142.5(b) application and supporting materials. During the meeting, State and Regional Water Board staffs explained that certain information and data gaps existed and needed to be filled before Regional Water Board staff would have sufficient information to make recommendations to the Regional Water Board regarding compliance with the Desalination Amendment and a new Water Code section 13142.5(b) determination, as well as to process Poseidon's ROWD. In terms of requesting additional information, State and Regional Water Board staffs explained that they intended to utilize a step-wise approach to focus additional information requests on larger unresolved items that would inform other factors in the determination analysis. As explained at the meeting, analysis and review of the submitted information related to these larger unresolved items might lead to additional requests for information pursuant to the Desalination Amendment and Water Code section 13142.5(b), but it might also eliminate the need for Poseidon to submit certain additional information if it is determined to no longer be needed.

At the meeting, State and Regional Water Board staffs identified the following main unresolved items based on their initial evaluation of the submitted materials: (1) the identified need for the desalinated water (Ocean Plan, Chapter III.M.2.b(2)); (2) analysis of alternative sites (Ocean Plan, Chapter III.M.2.b); and (3) the potential need for neutral third party review and analysis of certain information. (Ocean Plan, Chapter III.M.2.a). Following discussion of these unresolved items, State and Regional Water Board staffs agreed to provide Poseidon with more detailed information requests related to these areas. Consistent with the step-wise approach identified above, Regional Water Board staff provided an initial set of more detailed information requests in a July 29, 2016 letter.

On September 1, 2016, Poseidon submitted additional information and documents in response to the Regional Water Board staff's July 29, 2016 letter.

Permit Streamlining Act

For the first time, Poseidon's September 1, 2016 letter asserts that Regional Water Board's determination of the Project's compliance with section 13142.5(b) and the Desalination Amendment falls under the purview of the Permit Streamlining Act (Gov't. Code § 65920 *et seq.*).[1] The September 1, 2016 letter recharacterized the Regional Water Board staff's July 29, 2016 letter as a *Notice of Incomplete Application* under the Permit Streamlining Act, and requested that the Regional Water Board deem complete Poseidon's application for a section 13142.5(b) determination and amendment and renewal of the 2012 Order. By letter dated September 22, 2016, Poseidon granted the Regional Water Board an additional 30 days, or until October 31, 2016, to deem its application for a Water Code section 13142.5(b) determination complete or explicitly specify the remaining additional information necessary to deem the application complete.

[1] To support its position that the Water Code section 13142.5(b) determination falls within the purview of the Permit Streamlining Act, Poseidon's September 1, 2016 letter cites to a May 1, 2013 memo from the State Water Board's Office of Chief Counsel.

As an initial matter, Regional Water Board staff does not agree that the Water Code section 13142.5(b) determination is necessarily subject to the Permit Streamlining Act.[2] Moreover, Regional Water Board staff disagrees with Poseidon's recharacterization of the Regional Water Board staff's July 29, 2016 letter as a *Notice of Incomplete Application*. As explained above and reflected in the July 29, 2016 letter itself, Regional Water Board staff had taken a step-wise approach by asking for a limited set of additional information in order to better tailor and further narrow additional requests following review of the submitted information. The goal of the step-wise approach was to allow Regional Water Board staff sufficient time to fully evaluate the completeness and accuracy of the submitted information prior to determining whether it was necessary to ask for additional information. Regional Water Board staff appreciates Poseidon's timely response to the limited information requests contained in the July 29, 2016 letter.

Although Regional Water Board staff disagrees with Poseidon's position regarding application of the Permit Streamlining Act to Water Code section 13142.5(b), Regional Water Board staff understands Poseidon's request that Regional Water Board staff move away from the step-wise approach it had employed. To that end, Regional Water Board staff has endeavored to include a complete set of all additional information (attached) that Poseidon must submit for its Water Code section 13142.5(b) application to be considered complete. In doing so, Regional Water Board staff has not had an opportunity to fully evaluate the adequacy, completeness, and accuracy of the voluminous amount of documents and information submitted by Poseidon to date; rather, Regional Water Board staff has focused on whether the documents appear or purport to meet the information requirements contained in the Desalination Amendment. Because of Poseidon's desire for a full response to its Water Code section 13142.5(b) application, Regional Water Board staff has been unable to fully review Poseidon's application for renewal and amendment of the 2012 Order.[3] After Regional Water Board staff completes its review of Poseidon's application for renewal and amendment of the 2012 Order, Regional Water Board staff may require additional information in order to consider complete Poseidon's application for the 2012 Order renewal and amendment.

Additional Information Required

As indicated in prior correspondence, the Desalination Amendment's requirements are complex and require substantial information and analysis. Regional Water Board staff appreciates Poseidon's efforts to date in providing information required by the Desalination Amendment and necessary for Regional Water Board staff to make a recommendation to the Regional Water Board regarding whether the Project complies with Water Code section 13142.5(b).

As part of its June 30, 2016 application, Poseidon submitted a *Matrix Analyzing Information Requirements Under the Water Quality Control Plan for Ocean Waters of California Addressing the Proposed Huntington Beach Desalination Project* (Matrix). In consultation with State Water Board staff, Regional Water Board staff has annotated the Matrix (Annotated Matrix) by adding

---

[2] While the May 1, 2013 memo cited by Poseidon did analyze application of the Permit Streamlining Act to certain actions taken by the State Water Board and Regional Water Boards, it did not address section 13124.5(b) or discuss whether a Water Code section 13142.5(b) determination could be subject to the Permit Streamlining Act.

[3] The May 1, 2013 memo from the State Water Board's Office of Chief Counsel expressly concluded that issuance of an NPDES permit falls outside of the purview of the Permit Streamlining Act. Poseidon did not assert in its September 1, 2016 or September 22, 2016 letters that the Permit Streamlining Act applies to the Regional Water Board's consideration of amendment and renewal for the 2012 Order.

a fifth column to identify the outstanding information needs (in **bold text**) that correspond to the requirements contained in the Desalination Amendment. For each requirement, the Annotated Matrix now lists Poseidon's relevant submittals (including some submittals from Poseidon that were received after Poseidon prepared the Matrix), and, where applicable, provides Regional Water Board staff's initial comments on those submittals and identifies the specific additional information that is required so that the Regional Water Board can consider complete Poseidon's application for a determination of Project compliance with Water Code section 13142.5(b). Please note that Poseidon's responses to the information needs may result in new or different questions or information needs.

As described more fully in the attached Annotated Matrix, the major information needs as they relate to specific requirements of the Desalination Amendment include the following:

1. Alternative sites analysis. The Desalination Amendment requires Poseidon to evaluate a reasonable range of alternative sites, including (but not limited to) sites that would likely support subsurface intakes, in order to determine whether the proposed facility site is the best available site feasible to minimize intake and mortality of all forms of marine life. While Poseidon has identified a fairly large number of alternative sites, the information provided by Poseidon for each alternative site is incomplete, and therefore, insufficient to analyze whether any of these alternative sites is the best available site feasible to minimize intake and mortality of all forms of marine life. Chapters III.M.2.b, III.M.2.c(1), and III.M.2.d(1)(a) direct Poseidon to conduct very specific analyses of a reasonable range of alternative sites, including evaluating subsurface and surface intakes, as well as other designs and technologies to minimize intake and mortality. The Annotated Matrix identifies areas where this analysis is incomplete and/or insufficiently supported.

   The information required by the Ocean Plan for potential sites is extensive. Based on the information submitted to date by Poseidon, Regional Water Board staff does not have sufficient information to support ruling out any of the alternative sites identified by Poseidon at this time. Nonetheless, after Poseidon has the opportunity to provide some of the additional information required for each of the alternative sites, it may be possible to eliminate some of the alternative sites from further consideration. Regional Water Board staff is willing to meet with Poseidon to discuss narrowing the focus to a smaller number of alternative sites for which a more comprehensive analysis may better serve the needs of both Poseidon and the Regional Water Board, and also meet the requirements of the Desalination Amendment.

2. Brine Disposal. Ocean Plan Chapter III.M.2.d.2 provides that the preferred technology for minimizing intake and mortality of all forms of marine life resulting from brine discharge is to commingle brine with wastewater that would otherwise be discharged to the ocean. Poseidon has indicated that commingling the brine from the proposed facility with wastewater from the Orange County Sanitation District (OCSD) is not feasible because the wastewater will be used for recycling in the future and will therefore be unavailable for commingling. However, preliminary discussions between OCSD staff and Regional Water Board staff have indicated that wastewater may presently be available to the Project for commingling. The Ocean Plan specifies that the use of wastewater for commingling a brine discharge will not preclude future recycling of that wastewater. (Ocean Plan, Chapter III.M.2.d(2)(a).) Additionally, information submitted as part of the alternative sites analysis describes existing wastewater discharges in

Segments 6 (SOCWA's Aliso Creek Ocean Outfall) and 7 (SOCWA JB Lanthem Treatment Plant's San Juan Creek Ocean Outfall). Accordingly, Regional Water Board staff is requiring additional information regarding the feasibility of commingling the brine discharge with OCSD's outfall or the other two outfall locations identified above.

3. Multiport diffusers. Ocean Plan chapter M.2.d.2 states that multiport diffusers are the next best method for disposing of brine when the brine cannot be diluted by wastewater. Multiport diffusers must be engineered to maximize dilution, minimize the size of the brine mixing zone, minimize the suspension of benthic sediments, and minimize mortality of all forms of marine life. Regional Water Board staff is requesting Poseidon submit documentation that specifically addresses how the proposed diffuser designs minimize the size of the brine mixing zone, minimize the suspension of benthic sediments, and minimize mortality of all forms of marine life.

4. Project life cycle costs. Poseidon has submitted a report titled ISTAP Final Phase 2 Report, which addresses economic issues associated with feasibility of subsurface intakes at the proposed site. The ISTAP Final Phase 2 report was prepared prior to the adoption of the Desalination Amendment; thus, it was not written in a format that corresponds clearly to the requirements for the evaluation of project life cycle cost contained in Chapter III.M.2.d(1)(a)(i). Accordingly, Poseidon is required to identify the specific factors related to project life cycle costs that have been evaluated in the ISTAP Final Phase 2 report or any other report submitted by Poseidon. To the extent that any specific factors have not been adequately evaluated in the ISTAP Final Phase 2 Report or other submitted documents, Poseidon must submit evaluations of these factors.

5. Marine Life Mortality Report and Marine Life Mitigation Plan. Poseidon's submissions identify potential mitigation projects for Newland Marsh and/or Bolsa Chica as proposals to comply with Mitigation Option 2: Fee-based Mitigation Program (Ocean Plan, Chapter III.M.2.e(4)). Note that these submissions contemplate specific projects that Poseidon would fully fund, so it appears that these proposals should be considered by the Regional Water Board under Mitigation Option 1: Complete a Mitigation Project (Ocean Plan, Chapter III.M.2.e(3)). The underlying Ocean Plan requirements for potential mitigation options are not substantively different. Additional information is required to more fully evaluate marine life mortality in order to assess whether the proposal fully mitigates for construction impacts and the operational life of the facility and uses the best available mitigation measures feasible.

Finally, please note that the Desalination Amendment authorizes the Regional Water Board to require Poseidon to hire a neutral third party entity to review studies and models submitted and to make recommendations to the Regional Water Board. (Ocean Plan, Chapter III.M.2.a(1).) Following review of all materials submitted as part of Poseidon's complete application for a Water Code section 13142.5(b) determination, the Regional Water Board may require third party review and analysis of certain information submitted by Poseidon. It is possible that, as part of its review, a third party entity may ask Poseidon for additional information related to the subject of the review.

In closing, Regional Water Board staff recognizes that the attached Annotated Matrix contains a significant amount of additional information requirements. Regional Water Board staff would be happy to meet with Poseidon to answer any questions and to resolve any outstanding issues.

If you have any questions or would like to discuss further, please contact me at (951) 782-3286 or Milasol Gaslan at (951) 782-4419.

Sincerely,

Kurt V. Berchtold
Executive Officer

Enclosure:
Attachment A: Annotated Matrix

cc w/ enclosure:
Jonathan Bishop, Chief Deputy Director, State Water Resources Control Board, Jonathan.Bishop@waterboards.ca.gov
Karen Larsen, Deputy Director of the Division of Water Quality, State Water Resources Control Board, Karen.Larsen@waterboards.ca.gov
David Rice, State Water Resources Control Board – Office of the Chief Counsel, David.Rice@waterboards.ca.gov
Phil Wyels, State Water Resources Control Board – Office of the Chief Counsel, Philip.Wyels@waterboards.ca.gov
Milasol Gaslan, Santa Ana Regional Water Quality Control Board, Milasol.Gaslan@waterboards.ca.gov
Kathleen Fong, Santa Ana Regional Water Quality Control Board, Kathleen.Fong@waterboards.ca.gov
Hope Smythe, Santa Ana Regional Water Quality Control Board Hope.Smythe@waterboards.ca.gov
Claire Waggoner, State Water Resources Control Board, Claire.Waggoner@waterboards.ca.gov
Kimberly Tenggardjaja, State Water Resources Control Board, Kimberly.Tenggardjaja@waterboards.ca.gov
Daniel Ellis, State Water Resources Control Board, Daniel.Ellis@waterboards.ca.gov
Tom Luster, California Coastal Commission, Tom.Luster@coastal.ca.gov
Cy Oggins, State Lands Commission, Cy.Oggins@slc.ca.gov
Sean Bothwell, California Coastkeeper Alliance sbothwell@coastkeeper.org
Joe Geever, Residents for Responsible Desalination geeverjoe@gmail.com
Colin Kelly, Orange County Coastkeeper Colin@coastkeeper.org

ATTACHMENT A: Annotated Matrix Analyzing Information Requirements Under the Amendment to the Water Quality Control Plan for Ocean Waters of California Addressing Desalination Facility Intakes and Brine Discharges for the Proposed Huntington Beach Desalination Project

October 31, 2016

Table of Contents

Ocean Plan Chapter III.M.	**Page #**
1. Applicability and General Provisions	2
2. Water Code section 13142.5(b) Determinations for New and Expanded Facilities: Site, Design, Technology, and Mitigation Measures Feasibility Considerations	5
a. General Considerations	5
b. Site	9
c. Design	26
d. Technology	37
e. Mitigation	60
3. Receiving Water Limitation for Salinity	69
4. Monitoring and Reporting Programs	73

Appendix A
Analysis of Information Requirements Under the Amendment to the Water Quality Control Plan for Ocean Waters of California Addressing Desalination Facility Intakes and Brine Discharges for the Huntington Beach Desalination Project

Ocean Plan Section	Applicable	Poseidon's Key Recommendations, Conclusions, and Findings	RCF Ref	Water Boards staff's Comments
III. M. Implementation Provisions for Desalination Facilities				
1 Applicability and General Provisions				
a. Chapter III.M applies to desalination facilities using seawater. Chapter III.M.2 does not apply to desalination facilities operated by a federal agency. Chapter III.M.2, M.3, and M.4 do not apply to portable desalination facilities that withdraw less than 0.10 million gallons per day (mgd) of seawater and are operated by a governmental agency. These standards do not alter or limit in any way the authority of any public agency to implement its statutory obligations. The Executive Director of the State Water Board may temporarily waive the application of chapter III.M to desalination facilities that are operating to serve as a critical short term water supply during a state of emergency as declared by the Governor.	Yes	The proposed Huntington Beach Desalination Project (the "HBDP" or "Project") will be a privately owned desalination facility using Pacific Ocean seawater. Poseidon Resources (Surfside) LLC ("Poseidon") is the owner and operator of the HBDP, and applicant for purposes of compliance with Chapter III.M. The HBDP will produce an annual average of 50 million gallons per day ("mgd") of desalinated water. The Project is located adjacent to the Huntington Beach Generating Station ("HBGS"), and is being designed to modify and utilize the HBGS' existing seawater intake and discharge infrastructure. The HBGS uses a condenser cooling system ("once- through-cooling," or "OTC") in its energy production process and under its current National Pollutant Discharge Elimination System ("NPDES") Permit Order NO. R8-2014-0076 NPDES NO. CA0001163 approved December 12, 2014, allows for the intake of up to 387 MGD of seawater directly from the Pacific Ocean through an existing offshore intake pipeline. HBGS circulates the seawater through the energy- producing plant for cooling purposes. However, it is anticipated that the HBGS will discontinue the use of the OTC system as early as December 31, 2020. (see Appendix B) Until the HBGS fully discontinues the use of the OTC system, the HBDP will operate under two different operating scenarios: (1) co- located; and (2) temporary stand-alone. In February 2012 the Santa Ana Regional Water Quality Control Board ("Regional Water Board") approved the HBDP's Order No. R8-2012-0007, NPDES No. CA8000403, which permits the proposed facility's intake and discharge of seawater under the co-located and temporary stand-alone operating conditions and finds that under these two operating conditions that the HBDP complies with the requirements of California Water Code Section 13142.5(b). As permitted under the Regional Water Board Order No. R8-2012-0007, NPDES No. CA8000403, under either co-located or temporary stand-alone operating scenario approximately 50 MGD of concentrated seawater would re-enter the Pacific Ocean via the existing HBGS discharge pipe after blending with approximately an additional 20 MGD of	RCF 1	Regional Water Board and State Water Board staffs conducted a review of the information submitted and have identified additional information needs in **bold text** in subsequent portions of this matrix. Chapter III.M applies to the HBDP, except where noted in the comments below. Order No. R8-2012-0007, NPDES No. CA8000403 (2012 Order) is in effect until it expires on February 1, 2017 for the facility that was proposed at the time that the 2012 Order was adopted. The proposed facility has yet to be built. More importantly, the proposed project has subsequently changed in a material way, which requires a revised or new NPDES Permit. Therefore the 2012 Order is invalid as a permit to discharge, since it is not consistent with the currently proposed project. It would be premature to consider co-located and temporary stand-alone operations without a project description that complies with Water Code section 13142.5(b) (13142.5(b)) for long-term stand-alone operation. HBDP as currently proposed is considered a new facility and will require a full 13142.5(b) analysis. Regional Water Board staff will consider the applicability and relevance of the 2012 Order for the proposed co-located and temporary stand-alone operations, as necessary, once the project description for long-term stand-alone operations that complies with section 13142.5(b) is established. It is the Water Boards' understanding that Poseidon is no longer proposing to use flow augmentation and will use multiport diffusers during temporary stand-alone and permanent stand-alone operations. Additional information requests regarding multiport diffusers are included in the comments below. Please see RCF 17 regarding co-location with the HBGS and temporary stand-alone operations and compliance with the OTC Policy.

		seawater for dilution (see Appendix C). Once the HBGS fully discontinues the use of the OTC, the HBDP will operate under (3) Long term Stand-Alone. 1. Co-Location Under the co-located operating scenario, once the screened seawater is used by the HBGS, the HBDP would withdraw source water from the HBGS cooling system wastewater discharge pipe. The HBDP would then purify a portion of the HBGS discharged wastewater utilizing RO technology and discharge concentrated seawater back to the existing HBGS outfall pipeline to blend with remaining HBGS wastewater for dilution. 2. Temporary Stand-Alone If the HBGS temporarily ceases the use of its OTC system such that its wastewater discharge volume is less than that needed to meet the intake requirements for the HBDP, the HBDP would operate under the temporary stand-alone scenario where it would intake water directly from the Pacific Ocean via the existing HBGS' intake pipe. Under temporary stand-alone operations, the HBDP may decrease the volume, velocity of the seawater intake, and the temperature of discharge as compared to HBGS' current and historical permitted uses. 3. Long-term Stand-Alone Because the HBGS is expected to decommission its OTC system during the operating life of the desalination facility, the HBDP is also anticipated to operate under long term stand- alone conditions, which were analyzed in the HBDP's certified Final Subsequent Environmental Impact Report State Clearinghouse No. 200151092 ("SEIR"), and the Regional Water Board Order No. R8-2012-0007. Under long term stand- alone operations the HBDP will be responsible for direct intake of seawater and discharge of concentrated seawater.		
b. Definitions of New, Expanded, and Existing Facilities:				
(1) For purposes of chapter III.M, "existing facilities" means desalination facilities that have been issued an NPDES permit and all building permits and other governmental approvals necessary to commence construction for which the owner or operator has relied in good faith on those previously-issued permits and approvals and commenced construction of the facility beyond site grading prior to January 28, 2016.	No	Noted.	RCF 2	HBDP is not an existing facility, so this section does not apply.
(2) For purposes of chapter III.M, "expanded facilities" means existing facilities for which, after [January 28, 2016effective date of the Plan], the owner or operator does either of the following in a manner that could increase intake or mortality of	No	Noted.	RCF 3	HBDP is not an expanded facility, so this section does not apply.

all forms of marine life beyond that which was originally approved in any NPDES permit or Water Code section 13142.5, subdivision (b) (hereafter Water Code section 13142.5(b)) determination: 1) increases the amount of seawater used either exclusively by the facility or used by the facility in conjunction with other facilities or uses, or 2) changes the design or operation of the facility. To the extent that the desalination facility is co-located with another facility that withdraws water for a different purpose and that other facility reduces the volume of water withdrawn to a level less than the desalination facility's volume of water withdrawn, the desalination facility is considered to be an expanded facility.				
(3) For purposes of chapter III.M, "new facilities" means desalination facilities that are not existing facilities or expanded facilities.	Yes	In February 2012, the Regional Water Board approved a NPDES Permit authorizing the HBDP's operation under co-located and temporary stand-alone operating scenarios. The 2012 Order found that the proposed co• located and temporary stand-alone operations of the HBDP, as conditioned in the Order, satisfied the requirements of California Water Code section 13142.5(b). Upon the permanent shutdown of HBGS's once-through cooling system, currently anticipated as early as December 31, 2020, the 2012 Order requires Poseidon to apply for a permit covering its long term stand-alone operations, necessitating a new analysis pursuant to California Water Code section 13142.5(b). In the meantime, the 2012 Order remains valid and in full force and effect for the HBDP with an expiration date of February 1, 2017. (See Appendix C). On January 28th, 2016, the Office of Administrative Law approved the California Ocean Plan Desalination Amendment ("Desalination Amendment"), and under Chapter III.M.b., the permitted HBDP is neither an "existing" or "expanded" facility, therefore, the HBDP will be subject to the provisions of Chapter III.M as a "new" facility.	RCF 4	Water Boards staffs agree that the HBDP is a new facility. See Water Boards staffs' comment in RCF 1 regarding the applicability and relevance of the 2012 Order for the proposed co-located and temporary stand-alone operations.
c. Chapter III.M.2 (Water Code §13142.5(b) Determinations for New and Expanded Facilities: Site, Design, Technology, and Mitigation Measures) applies to new and expanded desalination facilities withdrawing seawater.	Yes	Noted. The HBGS is anticipated to decommission its cooling water system within the HBDP's next 5-year NPDES cycle (2017-2021). The HBDP, as a New Facility, is subject to a 13142.5(b) compliance determination.	RCF 5	Water Boards staffs agree that, since the HBDP is considered a new facility, the project must comply with the provisions in Chapter III.M. 2 of the Ocean Plan and the Regional Water Board will consider approval of a 13142.5(b) determination.
d. Chapter III.M.3 (Receiving Water Limitation for Salinity) applies to all desalination facilities that discharge into ocean waters and wastewater facilities that receive brine from seawater desalination facilities and discharge into ocean waters.	Yes	The HBDP discharges into the HBGS wastewater and/or into the ocean waters, therefore the Receiving Water Limitation for Salinity are applicable.	RCF 6	Water Boards staffs agree that the receiving water limitation for salinity is applicable to the discharges from the HBDP into ocean waters. See Water Boards staffs' comment in RCF 1 regarding the applicability and relevance of the 2012 Order for the proposed co-located and temporary stand-alone operations.

e. Chapter III.M.4 (Monitoring and Reporting Programs) applies to all desalination facilities that discharge into ocean waters. Chapter III.M.4 shall not apply to a wastewater facility that receives brine from a seawater desalination facility and discharges a positively buoyant commingled effluent through an existing wastewater outfall that is covered under an existing NPDES permit as long as the owner or operator monitors for compliance with the receiving water limitation set forth in chapter III.M.3. For the purposes of chapter III.M.4, a positively buoyant commingled effluent shall mean that the commingled plume rises when it enters the receiving water body due to salinity levels in the commingled discharge being lower than the natural background salinity.	Yes	The HBDP discharges into HBGS wastewater and/or the ocean waters, therefore the Monitoring and Reporting Programs are applicable.	RCF 7	Water Boards staffs agree that the Monitoring and Reporting Programs are applicable to the HBDP. See Water Boards staffs' comment in RCF 1 regarding the applicability and relevance of the 2012 Order for the proposed co-located and temporary stand-alone operations. Also, please note that Poseidon must comply with the Monitoring and Reporting provisions that require an owner or operator to establish baseline conditions prior to commencement of construction. Please see RFC 97-99 for more detail on this requirement.
f. References to the regional water board include the regional water board acting under delegated authority. For provisions that require consultation between regional water board and State Water Boards staff, the regional water board shall notify and consult with the State Water Boards staff prior to making a final determination on the item requiring consultation.	Yes	Noted.	RCF 8	No comment necessary.
g. All desalination facilities must comply with all other applicable sections of the Ocean Plan.	Yes	Order No. R8-2012-0007, NPDES No. CA8000403, addresses all other applicable sections of the Ocean Plan for the HBDP. Poseidon's Report of Waste Discharge (ROWD) for the HBDP will address all applicable sections of the Ocean Plan, including Chapter III.M.	RCF 9	The intent of this matrix is to identify information needs for the 13142.5(b) determination. Water Boards staff identified some issues that are associated with the NPDES permit in this matrix, but intend to address NPDES permit issues for the HBDP project in the future. Also, please see RCF 1 regarding the applicability of the 2012 Order.
2 Water Code section 13142.5(b) Determinations for New and Expanded Facilities: Site, Design, Technology, and Mitigation Measures Feasibility Considerations				
a. **General Considerations**				
(1) The owner or operator shall submit a request for a Water Code section 13142.5(b) determination to the appropriate regional water board as early as practicable. This request shall include sufficient information for the regional water board to conduct the analyses described below. The regional water board in consultation with the State Water Boards staff may require an owner or operator to provide additional studies or information if needed, including any information necessary to identify and assess other potential sources of mortality to all forms of marine life. All studies and models are subject to the approval of the regional	Yes	Poseidon respectfully requests the Regional Water Board conduct a Water Code section 13142.5(b) determination for the HBDP. This Ocean Plan Chapter III.M. analysis and compliance plan for the HBDP includes sufficient information to allow the Regional Water Board in consultation with the State Water Resources Control Board (the "State Water Board") to complete an analysis and to determine the best available site, design, technology, and mitigation measures feasible to minimize intake and mortality of all forms of marine life for the HBDP. The site and Project-specific information included with this request for a Water Code section 13142.5(b) compliance determination includes, but is not limited to, the Regional Water Board's NPDES Permit R8-2012-0007 13142.5(b) compliance determination for co-located and temporary stand-alone HBDP; 2015 Coastal Development Permit Application #9-15-1731; 2010 certified City of Huntington Beach's Subsequent Environmental Impact Report (SEIR); 2015 supplemental alternative site analysis study	RCF 10	Water Boards staffs acknowledge the request for a 13142.5(b) determination for the HBDP and have identified additional information Poseidon will need to submit for the Regional Water Board to conduct the analyses in subsequent RCFs. Section III. M.2.a.(1) of the Ocean Plan authorizes the Regional Water Board to require Poseidon to hire a neutral third party entity to review studies and models and make recommendations to the Regional Water Board. Following review of materials submitted as part of Poseidon's complete application, the Regional Water Board may require Poseidon to hire a neutral third party entity to review certain studies and models and to make recommendations to the Regional Water Board regarding these documents. Please be advised that, as part of any third party review process, the reviewer may ask Poseidon for additional information necessary for the reviewer

	water board in consultation with State Water Boards staff. The regional water board may require an owner or operator to hire a neutral third party entity to review studies and models and make recommendations to the regional water board.		prepared by Dudek; 2014-15 subsurface seawater intake feasibility studies prepared by the Coastal Commission's Independent Scientific & Technical Advisory Panel ("ISTAP"); and 2016 feasibility study prepared by Alden Research Laboratory Inc. (Alden). (Appendices C, D, E, F, G, and H, respectively)		to complete its review.
(2)	The regional water board shall conduct a Water Code section 13142.5(b) analysis of all new and expanded desalination facilities. A Water Code section 13142.5(b) analysis may include future expansions at the facility. The regional water board shall first analyze separately as independent considerations a range of feasible alternatives for the best available site, the best available design, the best available technology, and the best available mitigation measures to minimize intake and mortality of all forms of marine life. Then, the regional water board shall consider all four factors collectively and determine the best combination of feasible alternatives to minimize intake and mortality of all forms of marine life. The best combination of alternatives may not always include the best alternative under each individual factor because some alternatives may be mutually exclusive, redundant, or not feasible in combination.	Yes	Noted.	RCF11	Poseidon has not provided sufficient information for the Regional Water Board to analyze separately, as independent considerations, a range of feasible alternatives for the best available site, the best available design, the best available technology, and the best available mitigation measures to minimize intake and mortality of all forms of marine life. Poseidon has provided a significant amount of information, particularly regarding Property 1G, but has not provided all of the specific information required for the Regional Water Board to evaluate intake and mortality of all forms of marine life at a reasonable range of sites. Specific information requests are listed in subsequent comments.
(3)	The regional water board's Water Code section 13142.5(b) analysis for expanded facilities may be limited to those expansions or other changes that result in the increased intake or mortality of all forms of marine life, unless the regional water board determines that additional measures that minimize intake and mortality of all forms of marine life are feasible for the existing portions of the facility.	No	Noted.	RCF 12	HBDP is not an expanded facility, so this section does not apply.
(4)	In conducting the Water Code section 13142.5(b) determination, the regional water boards shall consult with other state agencies involved in the permitting of that facility, including, but not limited to: California Coastal Commission, California State Lands Commission, and California Department of Fish and Wildlife. The regional water board shall consider project-specific decisions made by other state agencies; however, the regional water board is not limited to project-specific	Yes	Noted.	RCF 13	For this preliminary review of Poseidon's request for a 13142.5(b) determination for HBDP, Regional Water Board staff has been consulting with staffs from the State Water Board, Coastal Commission, and State Lands Commission. The formal consultation process is intended to reduce unnecessary duplication and inconsistent decision-making by state agencies and to assist in compliance of HBDP. Coordinated review efforts will help to ensure that the state agencies consider approving the same proposed facility.

requirements set forth by other agencies and may include additional requirements in a Water Code section 13142.5(b) determination.				
(5) A regional water board may expressly condition a Water Code section 13142.5(b) determination based on the expectation of the occurrence of a future event. Such future events may include, but are not limited to, the permanent shutdown of a co-located power plant with intake structures shared with the desalination facility or a reduction in the volume of wastewater available for the dilution of brine. The regional water board must make a new Water Code section 13142.5(b) determination if the foreseeable future event occurs.	Yes	Permanent shutdown of the co-located HBGS with shared intake and outfall structures is anticipated to occur as early as December 31, 2020, and Poseidon requests that the Regional Water Board make a Water Code section 13142.5(b) determination for co-located, temporary and long-term stand-alone operation of the HBDP.	RCF 14	Please see Water Boards staffs' comments in RCF 1 and 17.
a. The owner or operator shall provide notice to the regional water board as soon as it becomes aware that the expected future event will occur, and shall submit a new request for a Water Code section 13142.5(b) determination to the regional water board at least one year prior to the event occurring. If the owner or operator does not become aware that the event will occur at least one year prior to the event occurring, the owner or operator shall submit the request as soon as possible.	Yes	The HBGS' NPDES Permit Order NO. R8-2014-0076 NPDES NO. CA0001163, approved December 12, 2014, allows for the intake of up to 387 MGD of seawater directly from the Pacific Ocean through an existing offshore intake pipeline. The HBGS is expected to operate its cooling water system through at least December 31, 2020. Nonetheless, at this time Poseidon respectfully requests that the Regional Water Board make a Water Code section 13142.5(b) compliance determination for the HBDP.	RCF 15	Please see Water Boards staffs' comments in RCF1 and 17.
b. The regional water board may allow up to five years from the date of the event for the owner or operator to make modifications to the facility required by a new Water Code section 13142.5(b) determination, provided that the regional water board finds that 1) any water supply interruption resulting from the facility modifications requires additional time for water users to obtain a temporary replacement supply or 2) such a compliance period is otherwise in the public interest and reasonably required for modification of the facility to comply with the determination.	Yes	The HBGS' NPDES Permit Order NO. R8-2014-0076 NPDES NO. CA0001163 was approved December 12, 2014, allows for the intake of up to 387 MGD of seawater directly from the Pacific Ocean through an existing offshore intake pipeline. The HBGS is expected to operate its cooling water system through at least December 31, 2020. The Project will be able to demonstrate compliance with Desalination Amendment during co-located, temporarily stand-alone and permanent, long term stand-alone operations. During co-located operation the Project will obtain its source water from the wastewater effluent stream of the HBGS. HBGS's current NPDES permit allows for a maximum intake of 387 MGD, which is over three times more than the daily average maximum need of the Project (i.e., 106.7 MGD), and the HBGS maintains a minimum flow of at least one seawater circulating pump (approximately 64 MGD) for system maintenance. The regulatory assumption under the SWRCB Once Through Cooling (OTC) Policy is 100 percent mortality of any marine life entrained by the power plant's seawater intake, and AES (HBGS owner) has already mitigated for entrainment from its operations under the requirements of the OTC Policy.	RCF 16	Please see Water Boards staffs' comments in RCF1 and 17.

		• ***Co-located Operations*** The Project will reduce its source water requirements from approximately an annual average of 126.7 MGD allowed for under Order No. R8-2012-0007 down to annual average 106.7 MGD. The Project will continue to produce an annual average of 50 MGD of product water and discharge approximately 56.7 MGD at a salinity of 63.1 parts per thousand (ppt). In order to comply with the Desalination Amendment receiving water limits of approximately 35.5 ppt at the Brine Mixing Zone of 328 feet, approximately 296 MGD of wastewater is required from the HBGS to meet the Project intake needs and discharge needs. (Jenkins2016). Since HBGS does not always discharge 296 MGD of wastewater, prior to commercial operations of the Project a multiport diffuser will also be added to the existing discharge tower to meet the Desalination Amendment receiving water salinity limits. The multiport diffuser will reduce the salinity in the concentrated seawater discharged by the Project to no more than 2 parts per thousand (ppt) above ambient within 328 feet of the discharge point. The engineered diffuser would thus comply with Desalination Amendment requirements that receiving water salinity not exceed 2 ppt above ambient at a distance of 328 feet (100 meters) of the point where seawater desalination RO concentrate is discharged. (Jenkins 2016) • ***Temporary Stand-alone Operations*** This operating condition could occur if the HBGS' daily seawater intake flow falls below the desalination Project's annual average daily seawater intake requirement of approximately 106.7 MGD. At all times HBGS operates at least one circulating pump with a rated capacity of 64 MGD. During temporary stand-alone operations (when HBGS is only using 64 MGD) the Project will operate a second pump to obtain the remaining seawater (approximately 43 MGD) necessary to produce an annual average of 50 MGD of product water. Under this scenario the Project would still minimize intake and mortality of marine life by obtaining the majority of its source water from the HBGS wastewater stream as compared to 100% of the source waster from the ocean through a 1mm screened intake when fully stand-alone. The Project's proposed Marine Life Mitigation Plan (MLMP) would account for the full 106.7 MGD annual average intake despite the fact that at least 64 MGD of the Project's source water will be wastewater from the HBGS. Therefore, the Project's marine life effects will be fully mitigated and until the Project is in a permanent stand-alone operating scenario, the use of the HBGS wastewater stream for a majority of the source water is consistent with the marine life minimization provisions of the Desalination Amendment. • ***Permanent Stand-alone Operations*** It is anticipated that HBGS will discontinue the use of once-through cooling water by December 31, 2020. When once-through cooling operations are terminated at HBGS, the Project's intake system will be modified to operate under permanent stand-alone conditions. Prior to the permanent stand-alone conditions, Poseidon will retrofit the existing seawater intake pipeline with the offshore 1mm wedgewire screen manifold that will achieve a through-screen velocity of 0.5 feet per second or less, in accordance with requirements of Ocean Plan Section III.M.2.d(1)(c).		
c. If the regional water board makes a	Yes	Noted. The HBGS' NPDES Permit Order NO. R8-2014-0076 NPDES NO.	RCF 17	Poseidon's statement that HBGS has not yet achieved final

Water Code section 13142.5(b) determination for a desalination facility that will be co-located with a power plant, the regional water board shall condition its determination on the power plant remaining in compliance with the Water Quality Control Policy on the Use of Coastal and Estuarine Waters for Power Plant Cooling.		CA0001163 was approved December 12, 2014 and demonstrates the HBGS' compliance with the Water Quality Control Policy on the Use of Coastal and Estuarine Waters for Power Plant Cooling.		compliance with the OTC Policy. On April 1, 2011, AES Southland submitted an implementation plan for how HBGS will comply with the OTC Policy; AES Southland amended this plan on June 17, 2011. According to AES Southland's revised implementation plan and other correspondence (letter dated April 23, 2015), AES Southland proposed to use Track 1 to bring Units 1 and 2 at HBGS into compliance. Track 1 compliance will be completed in two phases and will consist of the construction of a new combined cycle gas turbine and two open cycle gas turbine peakers. In a letter to State Water Board dated February 12, 2016, AES Southland indicated its intention to shut down Unit 1 as early as December 31, 2019 and Unit 2 by the OTC Policy's final compliance deadline of December 31, 2020. Units 1 and 2 have until 2019 and 2020 respectively to come into final compliance. As stated in State Water Board's letter to Poseidon on June 1, 2016, the Ocean Plan requires the appropriate regional water board to condition its 13142.5(b) determination for a desalination facility that will be co-located with a power plant so that the power plant will remain in compliance with the OTC Policy. The OTC Policy requires power plants that are not directly engaging in power-generating activities or critical system maintenance to cease intake flows unless the owner or operator demonstrates to the State Water Board that reduced minimum flow is necessary for operations. HBGS may not withdraw more seawater than is allowed under the OTC Policy as described above. Therefore, HBGS would not comply with the OTC Policy if HBGS withdraws seawater solely to provide HBDP with source water during co-located or temporary stand-alone operations unless such withdrawal is authorized by the Regional Water Board as being in full compliance with the requirements to minimize intake and mortality of all forms of marine life in accordance with Chapter III.M of the Ocean Plan. In addition, please see RCF 49 regarding flow augmentation.
b. **Site**				
Site is the general onshore and offshore location of a new or expanded facility. There may be multiple potential facility design configurations within any given site. The regional water board shall require that the owner or operator evaluate a reasonable range of nearby sites, including sites that would likely support subsurface intakes. For each potential site, in order to determine whether a proposed facility site is the	Yes	The 2005 REIR, 2010 SEIR, 2012 NPDES, 2014 and 2015 ISTAP reports, and the 2015 Dudek Report individually and collectively provide incontrovertible information and analysis concluding that the proposed site located adjacent to the HBGS is the best available and feasible site for the HBDP. The alternative site analysis confirms that the proposed site meets the project's core objectives[1] and meets the identified local need for desalinated water; avoids impacts to sensitive habitats and species; minimizes direct and indirect effects on all forms of marine life from the	RCF 18	In the Alternative Sites Analysis (Appendix E) and the additional information submitted on September 1, 2016, Poseidon has identified a range of alternative sites, including sites in northern (Properties 1A-1F, 1H, and Naval Weapons Station) and southern Orange County (Segments 6-9). Water Boards staffs have identified additional information that is needed to ensure that Poseidon has fully evaluated a reasonable range of nearby sites, including but not limited to

[1] The stated Project objectives identified in the 2005 Re-circulated Environmental Impact Report and 2010 FSEIR include *1. Use proven technology to affordably provide a long-term, local and reliable source of water not subject to the variations of drought or regulatory constraints; 2. Reduce local dependence on imported water and strengthen regional self-reliance 3. Contribute desalinated water to satisfy regional water supply planning goals*.

best available site feasible to minimize intake and mortality of all forms of marine life, the regional water board shall require the owner or operator to:		facility's construction and operation; minimizes the intake and mortality of all forms of marine life; uses where available existing discharge infrastructure and ensures the intake and discharge structures are not located within a Marine Protected Area ("MPA") or State Water Quality Protection Area. Furthermore, the alternative site analyses conclude that there are no other nearby sites within a reasonable range of the proposed site that meet the Project's objectives and where subsurface seawater intakes would be feasible. The process used in the Alternative Sites Analysis (Appendix E) is diagrammed below: 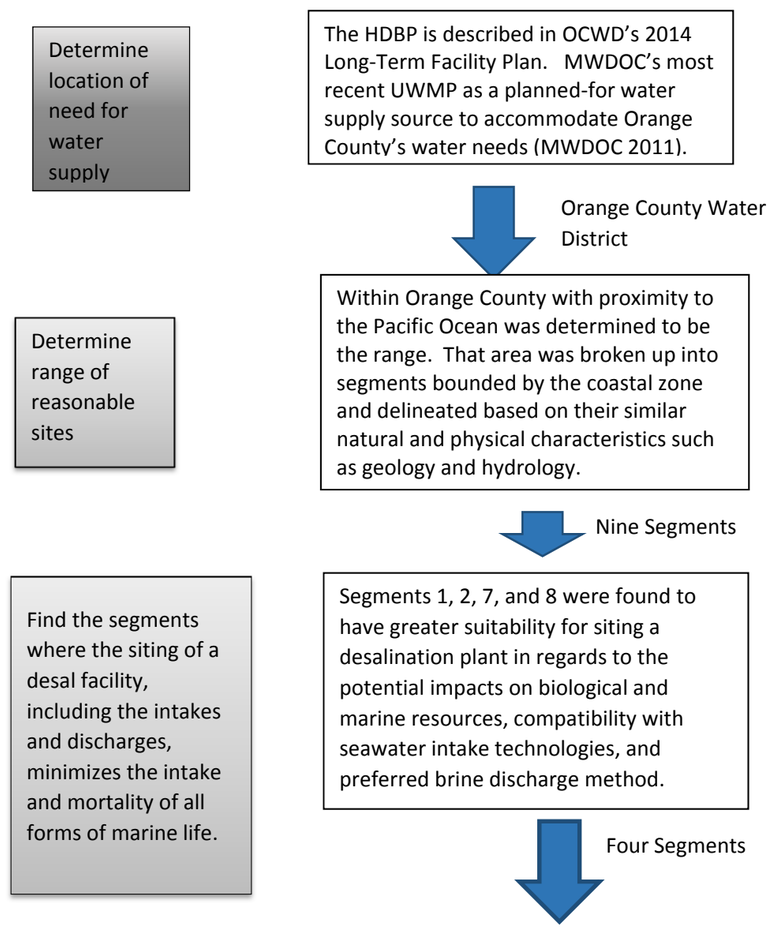 		sites that would likely support subsurface intakes. Water Boards staff is willing to meet with Poseidon to consider narrowing the focus to a smaller number of alternative sites for which a more comprehensive analysis of best available design feasible may better serve the needs of both Poseidon and the Regional Water Board, and meet the requirements of the Desalination Amendment. Poseidon must submit additional information to support an analysis of the feasibility of subsurface intakes consistent with Ocean Plan Chapter III.M.2.b for the following sites: Properties 1A, 1B, 1C, 1D, 1E, 1F, 1G, 1H, Seal Beach Naval Weapons Station, Segments 6, 7, 8 and 9. Note that additional information is required for the Seal Beach Naval Weapons Station, notwithstanding its current use. San Diego County Water Authority is negotiating access to Camp Pendleton for purposes of siting a desalination facility. Poseidon rejected sites that did not have at least 10 unoccupied contiguous acres zoned as appropriate for industrial or utility uses. This is not a sufficient reason to eliminate a site. Occupied land may be available for purchase, and zoning designations may be changed. In addition, it may be feasible to purchase adjacent land to make 10 contiguous acres or purchase nearby land to meet the facility needs. **<u>Please submit the following information:</u>** • **Justification for why Poseidon did not consider alternative sites outside of Orange County in the proximity of existing infrastructure that could be used to transport product water to the OCWD service area. To the extent that any site(s) outside of Orange County could be used, Poseidon will need to submit the analysis described in the information requirements associated with Chapter III.M.2.b for the alternative site(s).** • **In Attachment 3B of the September 1, 2016 Poseidon submittal, under "Other Considerations," Poseidon indicates that, with respect to available infrastructure, "there are no regional connections of significant size in the area" for Segments 1A-1D and the Seal Beach Naval Weapons Station segment. Poseidon needs to identify the existing infrastructure and the actual capacity limitations.** • **Poseidon only cursorily evaluated the alternative sites for subsurface intake feasibility but did not adequately investigate the alternative sites for potential surface water intakes. A thorough analysis of alternative sites for surface water intakes is required by the Ocean Plan**

Consider whether subsurface intakes are feasible.

This analysis investigated the suitability of siting a 25 to 50 MGD desalination plant using various subsurface water intake technologies in each study area segment. Segment 2 would not be suitable for siting a desalination plant that would use a subsurface intake (e.g., SIG, wells in shallow aquifer, and vertical or slant wells).The remaining segments (Segments 1, 7, and 8) would be relatively suitable for various preferred methods of brine discharge.

Three Segments

Potential onshore locations for siting such a desalination facility in these segments were analyzed.

It was determined that any potential site for a 25 to 50 MGD desalination plant would require approximately 10 contiguous acres to contain all necessary on land facilities associated with the desalination plant. Additionally, sites were determined to be potentially compatible with a desalination plant if they had an existing land use designation of industrial or utilities. 14 sites were identified within Segments 1, 7, and 8 that were potentially large enough to accommodate a 25 to 50 MGD desalination facility and that were also designated as having either an industrial or utilities existing land use.

Fourteen Sites

The 14 properties were further analyzed based on the potential consistency with land use plans and policies

Incompatibility with the local jurisdictions land use and zoning designations resulted in the elimination of 8 of the 14 properties. Two of the remaining 6 properties were eliminated from

in order to ensure that any site that is selected is the best available site feasible to minimize intake and mortality of all forms of marine life. The absence of existing infrastructure that could be used as a surface water intake is not a disqualifying factor.

- **For Properties 1A, 1B, 1C, 1D, 1E, 1F, 1H, Seal Beach Naval Weapons Station, Segments 6, 7, 8 and 9, provide a list of alternative locations, whether occupied or not, where land could be purchased to meet the desired acreage. Also include a list of locations where it would be feasible to buy a smaller plot and utilize a nearby site.**

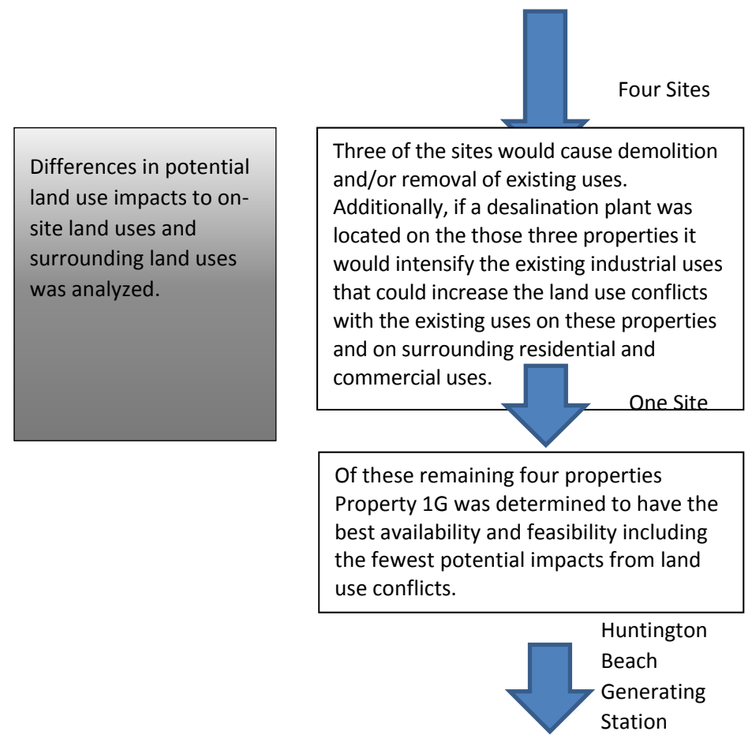

The Alternative Sites Analysis confirms that the proposed site meets the project's core objectives and meets the identified local need for desalinated water; avoids impacts to sensitive habitats and species; minimizes direct and indirect effects on all forms of marine life from the facility's construction and operation; minimizes the intake and mortality of all forms of marine life; uses where available existing discharge infrastructure and ensures the intake and discharge structures are not located within a Marine Protected Area ("MPA") or State Water Quality Protection Area. Furthermore, the Alternative Site Analysis concluded that there are no other nearby sites within a reasonable range of the proposed site that meet the Project's objectives and where subsurface seawater intakes would be feasible.

The Regional Water Board conducted a 13142.5(b) determination for the

		co-located and temporary stand-alone HBDP operations in 2012. Order R8-2012-0007 (Appendix C) Includes the following finding regarding the proposed site: 11). Pursuant to Water Code Section 13142.5(b), the Regional Water Board finds that there are no better alternative and feasible sites available for the Facility and that the HBGS site is the best available site feasible to minimize intake and mortality to marine life during operations of the Facility.		
(1) [For each potential site], Consider whether subsurface intakes are feasible.	Yes	Feasibility assessment criteria. For purposes of Chapter III.M., Feasible means capable of being accomplished in a successful manner within a reasonable period of time, taking into account economic, environmental, social, and technological factors. The proposed HBDP's alternative subsurface seawater intake feasibility reports and analyses include, but are not limited to, the City of Huntington Beach's 2010 certified Final SEIR for the Seawater Desalination Project at Huntington Beach (Appendix D); Regional Water Board's 2012 Order No. R8-2012-0007, NPDES No. CA8000403 and Water Code 13142.5(b) compliance determination (Appendix C); 2014-15 California Coastal Commission's ISTAP Phase 1 and Phase 2 reports (Appendix F and G); 2013 and 2015 Geosyntec technical memorandum entitled *"Feasibility Assessment of Shoreline Subsurface Collectors for the Huntington Beach Seawater Desalination Project "(*Appendix K); 2016 Dr. Russell Detwiler technical memorandum entitled *"Review of groundwater flow modeling developed by Geosyntec to simulate pumping from slant wells beneath the beach in Huntington Beach."* (Appendix K); Orange County Water District ("OCWD") comments on the Coastal Commission's Well Investigation Team ("WIT") expert third-party review of the Hydrologic Model for the Poseidon Huntington Beach Project (see Appendix L). Alternative Site Analysis (Appendix E) Section 4.1 describes the criteria used to evaluate the suitability of vertical wells, Ranney wells, horizontal directionally drilled wells, slant wells, and SIGs (including both seafloor infiltration galleries and surf zone infiltration galleries) including: • Physical and geological conditions • Offshore sand and ocean sediment transport • Onshore surf zone energy and erosion • Sand replenishment efforts • Characteristics of the aquifer; and • Potential for inland aquifer impacts. Section 4.2 contains an analysis based on these criteria for each segment in the study area. As described in greater detail in RCF 33a (Chapter III.M .2. d.1. technology), the information and analysis from these aforementioned Project and site-specific reports provide incontrovertible evidence that subsurface seawater intakes are infeasible for the proposed Project based on the Ocean Plan's definition of feasibility.	RCF 19	Note that most of the required economic feasibility information for Chapter III.M.2.b.(1) is specifically identified in RCF 33b and not repeated here. The analyses for the 2012 Order and accompanying 13142.5(b) determination for HBDP were completed before the adoption of the Desalination Amendment to the Ocean Plan. As stated in RCF 1, the 2012 Order and the associated 13142.5(b) determination are invalid for the permanent stand-alone facility as they are inconsistent with the HBDP as currently proposed. While some of the information used in the original analysis may be relevant to the new 13142.5(b) analysis, the Water Boards will be conducting a new analysis rather than relying on the findings from 2012. At Property 1G, Poseidon concluded that a SIG is economically, environmentally, and socially infeasible. The ISTAP Phase 2 report states that there may be potential environmental impacts associated with the SIG option at Property 1G, but that the environmental impacts would not likely prohibit the construction and operation of a SIG as long as appropriate protection and mitigation measures were implemented. The ISTAP Final Phase 2 report also indicated there are measures to take that would reduce or eliminate impacts to coastal recreation and tourism income. The ISTAP Final Phase 2 report does not support the conclusion that SIGs at Property 1G are environmentally and socially infeasible. Poseidon evaluated slant wells at Property 1G that would extend 425 feet offshore and found them to be infeasible due to the effects on the Talbert aquifer. Slant wells sited farther offshore may not have an effect on the Talbert aquifer or the effects may be minimal. **<u>Please submit the following information for Property 1G:</u>** • **An evaluation of the technical and economic feasibility of installing slant wells that are longer than 425 feet, including positioning the well screens far enough offshore to avoid any substantial effects on the Talbert**

		The City of Huntington Beach's Final Certified SEIR for the Seawater Desalination Project at Huntington Beach (Appendix D) includes the following findings regarding the feasibility of alternative subsurface intakes: *In summary, based on overall impacts on the environment, the public coastal resources access/use issues associated with the construction and operation of a seabed infiltration gallery, this intake alternative would not be considered feasible for application to the proposed project. None of the proposed alternative intake systems would be an acceptable substitute to the proposed use of the existing HBGS' cooling water system as a supplier of source water for the Seawater Desalination Project at Huntington Beach.* The 2012 Regional Water Board 13142.5(b) compliance determination for the co-located and temporary stand-alone HBDP operations (Order R8-2012-0007 (Appendix C)) includes the following finding regarding the feasibility of alternative subsurface intakes: *The alternative subsurface intake systems were determined not to be the environmentally preferred alternatives. Taking into account economic, environmental and technological factors, the Regional Water Board finds that the alternative subsurface intakes are not feasible.* The Coastal Commission's 2014-2015 ISTAP Phase 1 and 2 reports concluded that the well technologies and a beach infiltration gallery are technically infeasible and that a Seafloor Infiltration Gallery ("SIG") would have "severe" short-term environmental and social impacts as well as long-term environmental impacts including the loss of benthic habitat and operational entrainment. Furthermore, the ISTAP Phase 2 report concludes: Conclusion 6: The SIG option is not economically viable at the Huntington Beach location within a reasonable time frame, due to high capital costs and only modest reduction in annual operating costs compared to the open ocean intake option. August 25, 2015 ISTAP Phase 2 report comment letter (see Appendix G1) from the Huntington Beach City Attorney's office supports the ISTAP's feasibility conclusions. It states, in relevant part, that "*The certified SEIR concluded that a SIG was both infeasible and an environmentally inferior option to open ocean intake design. It does not appear from the draft report's findings that circumstances have changed*."		**aquifer. The evaluation shall include an assessment of the amount of source water the slant wells can withdraw, up to the proposed 106 MGD.** **<u>Please submit the following information for Properties 1A, 1B, 1C, 1D, 1E, 1F, 1H, Seal Beach Naval Weapons Station, and Segments 6, 7, 8 and 9:</u>** • **If Poseidon is asserting that HBDP cannot be completed within a reasonable period of time, Poseidon must submit a detailed project timeline.**
(2) [For each potential site], Consider whether the identified need for desalinated water is consistent with an applicable adopted urban water management plan prepared in accordance with Water Code section 10631, or if no urban water management plan is available, other water planning documents such as a county general plan or integrated regional water management	Yes	A detailed analysis (see Appendix EE) of the Project's compliance with this provision of the Desalination Amendment was provided to the Regional Board staff in May 2016. In approving Order No. R8-2012-0007, the RWQCB found that the Project is meeting a stated demand for water in Orange County. The Desalination Amendment requires that the need for desalinated water be identified in appropriate planning documents. The Desalination Amendment also provides that a design capacity for a proposed facility that is greater than	RCF 20	In addition to OCWD's Water Reliability Agreement Term Sheet (Appendix P) and Long-Term Facilities Plan (Appendix O), on May 3, 2016, Poseidon submitted to Regional Water Boards staff a white paper titled Clearly Identifying the Local Need for 50 Million Gallons per Day of Desalinated Ocean Water for Huntington Beach Desalination Project's Planned Design Capacity (Appendix EE), OCWD's 2015 Groundwater Management Plan (dated June 17, 2015, Appendix GG), and MWDOC's 2015 final draft UWMP (dated May 2016, Appendix

plan.		the identified need cannot be used to justify a determination that subsurface intakes are not feasible. The Orange County Water District ("OCWD") has approved a Water Purchase Agreement Term Sheet (see Appendix P) for the purchase of the Project's 50 MGD (56,000 acre feet per year) capacity. As such, OCWD is the primary water agency involved in the Project. As the manager of the Orange County Groundwater Basin, the appropriate planning document for OCWD is the 2015 Ground Water Management Plan (GWMP) (See Appendix GG) which identified a local and regional need for the 56,000 acre feet per year (AFY) of desalinated water. This need is based on three key factors: limited imported water supplies; declining Santa Ana River flows; and increased demand for water. The GWMP explicitly identifies the Project as a planned source of 56,000 AFY in the next five-year period of 2015 to 2020. The GWMP's assumptions regarding need are echoed in OCWD's 2014 Long-Term Facilities Plan (see Appendix O). Additionally, each of the local retail agencies that could receive Project water has an adopted an Urban Water Management Plan (UWMP) that includes a description of the Project as one of the potential seawater desalination projects in the region. On a regional basis, the Municipal Water District of Orange County's 2015 Final UWMP (see Appendix FF) specifically identifies the Project as a planned water supply project for 56,000 AFY. Similarly, the Metropolitan Water District of Southern California's 2015 Integrated Water Resources Plan update (see Appendix KK) identifies 238,000 AFY of additional potable water as the local supply reliability target, which is consistent with the Project. The Integrated Water Management Plans in Orange County support the importance of enhancing local water supplies and reducing reliance on imported water. Finally, the State's California Water Action Plan, California Water Plan, and Delta Reform Act all also include policy objectives that emphasize increased regional self-reliance and reduced dependence on imported water. By any measure, the Project's 56,000 AFY design capacity is therefore consistent with, and in furtherance of, existing planning documents at multiple local, regional, and state levels of water planning. Correspondence over the years from the Orange County Water District to permitting agencies including the Coastal Commission and Santa Ana Regional Water Board further provide a record of documented need and demand for the 50 MGD capacity of the Huntington Beach Desalination Project. (Appendices P1)		FF). Poseidon indicated that the latter two documents are the appropriate planning documents for demonstrating how water supply and demand needs are managed in the OCWD service area. Appendix EE explains that MWDOC is the supplier of imported water for recharge into the OCWD groundwater basin or for direct use by member agencies and is also a potential recipient of desalinated water for distribution. Appendix EE indicates that since OCWD is the primary water agency involved in the HBDP and is the manager of the Orange County Groundwater Basin, the appropriate planning document for OCWD is the 2015 Groundwater Management Plan (Appendix GG), which identified a local and regional need for up to 56,000 acre-feet/year (50 MGD) of desalinated water from HBDP. This need was based on three key factors: limited imported water supplies, declining Santa Ana River flows, and increased demand for water. The Groundwater Management Plan (Appendix GG) identifies the HBDP as a planned source of up to 56,000 acre-ft/year in the next five year period of 2015-2020, and MWDOC's 2015 final draft UWMP (Appendix FF) also lists the HBDP as a potential planned water supply project for up to 56,000 acre-ft/year. Poseidon has provided an addendum to Appendix EE. The addendum addressed questions raised in a July 14, 2016, meeting among staff from Poseidon, Water Boards, and Coastal Commission. The addendum explained that the HBDP is identified as a "potential" project in the final MWDOC 2015 UWMP because that agency does not implement construction of identified projects. The addendum also noted that the OCWD Groundwater Management Plan identifies HBDP as providing "up to" 50 MGD because the City of Huntington Beach may exercise an option to purchase 3,360 acre feet per year. Finally, the addendum explains how local water entities address imported and ground water in the urban water management plans, in accordance with Water Code section 10631. Water Boards staff does not seek additional information on the identified need for the water from the HBDP at this time.
(3) [For each potential site], Analyze the feasibility of placing intake, discharge, and other facility infrastructure in a location that avoid impacts to sensitive habitats and sensitive species.	Yes	The proposed location of the HBDP and its intake and discharge infrastructure will avoid impacts to sensitive habitats and species. The selected location of the proposed desalination facility is a 12-acre site inshore of the Pacific Coast Highway, adjacent to AES Huntington Beach generating station, approximately two miles south of the Huntington Beach Municipal Pier, and one mile north of the mouth of the Santa Anna River. The site has an existing 1,800-ft long seawater intake currently being used to bring cooling water into the power plant and 1,500-ft outfall used to return	RCF 21	In the Alternative Sites Analysis (Appendix E) and Attachment 3B of Poseidon's September 1, 2016 submission, Poseidon provided information related to location or presence of sensitive habitats, sensitive species, MPAs, and ASBSs in the vicinity of the proposed site and alternative sites. However, Poseidon did not analyze the effects of the presence of an intake or discharge on sensitive habitats, sensitive species, MPAs, and ASBSs. Also, please see Water Boards staffs' comments in RCF 22.

		the HBGS effluent back to the Pacific Ocean. The marine setting for the HBDP intake and discharge is part of a larger oceanographic unit known as the Southern California Bight. The Southern California Bight comprises the offshore area reaching from Point Conception to the north and below the California/Mexican border to the south and extending outward from the shore to a distance where the ocean depth is approximately 200 fathoms (and inshore of the Santa Rosa Ridge). Although geographically identified by these boundaries, it is a region that is more accurately defined by its patterns of ocean currents, temperatures, and climatic setting. It is a dynamic oceanographic region where the area's populations of fishes and other marine organisms fluctuate in response to environmental alterations such as El Niño events. The Southern California Bight is also bordered by the most densely human populated coastal region in California and is consequently affected to varying degrees by associated pollution and shoreline development. The sea floor (benthic habitat) surrounding the HBGS discharge is relatively smooth and gently sloping, and contains medium to fine-grain sands. It extends for a considerable distance, both up and down the coast from the discharge site. Littoral currents sweep the waters overlying the coastal sea floor in a generally downcoast direction, although net movement is affected by tides, winds, and storms. These factors and sand grain size play a major role in determining the distribution, abundance, and diversity of benthic animals. All of the marine species living near the HBGS commonly occur over geographic ranges extending well beyond the coastal waters of Southern California. They are part of a biologically and climatologically unique region called the Southern California Bight (SCB). Geographically, the SCB is an open embayment extending from Point Conception, California into Baja California, Mexico and 125 miles offshore. Biologically, the SCB is a transition-zone species assemblage positioned between two larger and diverse assemblages: one in the cooler waters to the north, and the other in the warmer waters to the south. SCB organisms comprise a mix of species (some from the cooler northern waters and some from the warmer southern waters). The marine organisms living in the vicinity of the HBGS discharge occur in one of three habitat classifications: (1) substrate (termed infauna); (2) on the bottom seafloor (termed benthic - macroinvertebrates, including worms, crabs, sand dollars, starfish and some fishes); or (3) in the water column itself (termed pelagic - consisting of squid, fish, plankton, etc.). For further details see Appendix D, the SEIR and Appendix Q, the Tenera 2015. The overall findings of environmental setting around the intake and discharge are as follows: • There are strong indications that a relatively stable assemblage of organisms occur in the marine habitats near the discharge and, although the numbers and relative abundance rankings of species shift from year to year, no species has either been recruited to or eliminated from the area		**<u>Please submit the following information:</u>** • **An analysis of the effects of the presence of an intake or discharge on sensitive habitats, sensitive species, MPAs, and ASBSs. The analysis must quantify the amount of entrained organisms that originate from sensitive habitats, including MPAs and ASBSs, specifically the Bolsa Chica Basin and Bolsa Bay State Marine Conservation Areas.**

		• All of the organisms occurring in waters adjacent to the HBGS have much broader geographic distributions, extending in most instances to beyond the range of the Southern California Bight • Both the sea floor and littoral water habitats occurring near the HBGS intake and discharge site are not home to any threatened or endangered marine species. It should also be noted that the project is not within an Area of Special Biological Significance (ASBS). • The area does not have any "environmentally sensitive" habitats such as eel grass beds, surf grass, rocky shores, or kelp beds. The nearest stand of giant kelp (*Macrocystis pyrifera*) is located inside the Newport Harbor entrance jetty 11.0 km (6.8 mi) downcoast. • The movement, abundance, and diversity of invertebrate and fish populations along the Huntington Beach coast appear all to be in response to natural ecological factors and not in any way influenced or affected by the HBGS discharge. • Operation of the HBGS had no detectable adverse effects on the marine biota or the beneficial uses of the receiving waters. April 29, 2016 Technical Memorandum: Evaluation of a Long-Distance Offshore Intake for the Huntington Beach Desalination Plant (Appendix BB) provides further information and data that moving the screened open ocean intake farter offshore would not result in lower entrainment, and that the current location has some of the lowest larval concentrations along the coast of Orange County. Alternative Site Analysis (Appendix E) Section 4.1 describes the biological and marine resources used as criteria in this analysis, including sensitive habitats and species such as MPAs, ASBSs, kelp beds, surfgrass and eelgrass beds, estuaries and wetlands, and other sensitive species and habitats. Section 4.2 evaluates the potential impacts of surface and subsurface (i.e., vertical wells, Ranney wells, horizontal directionally drilled wells, slant wells, and SIGs) intake technologies as well as brine discharge methods (i.e., multi-port diffuser and commingling with wastewater discharge) on the sensitive habitats and species present in each segment in the study area.		
(4) [For each potential site], Analyze the direct and indirect effects on all forms of marine life resulting from facility construction and operation, individually and in combination with potential anthropogenic effects on all forms of marine life resulting from other past, present, and reasonably foreseeable future activities within the area affected by the facility.	Yes	Alternative Site Analysis (Appendix E) Section 4.2 analyzes the potential direct and indirect effects from construction and operation of a desalination plant on the specific biological and marine resources (i.e., MPAs, ASBSs, kelp beds, surfgrass and eelgrass beds, estuaries and wetlands, and other sensitive species and habitats) present in each of the study area segments. The analysis of the direct and indirect effects on all forms of marine life resulting from the construction and operation of the proposed HBDP can be found in Appendix H, HBDP Intake/Discharge Feasibility Analysis, Alden, March 2016, Appendix T, Intake APF Calculations, Tenera 2015, Appendices U and V, Diffuser APF Calculations, MBC 2015 and Appendices R and S, 35.5 ppt Salinity Zone Acreage Calculations based on the guidance found in the Desalination Amendment The direct and indirect effects on all forms of marine life resulting from the construction and operation of alternatives under consideration for the HBDP with an average annual intake of 106.7 mgd are summarized in Table 1.	RCF 22	Appendices D, Q, and V include information on the effects of construction and operation of the HBDP at the proposed location. The Alternative Sites Analysis (Appendix E) included information about sensitive habitats and sensitive species but did not provide an adequate assessment of intake and mortality of all forms of marine life for each alternative site. Water Boards staffs expect that there are variations in the abundance and diversity of marine life at different sites along the coast and at different distances from shore. An analysis of intake and mortality of all forms of marine life in the water column and benthic environment for each alternative site should evaluate the following at distances of 1800 (the proposed intake location), 3000, and 4000 feet from shore: species abundance, density of species, species diversity, species richness, species evenness, and chlorophyll-a, using sampling methods that would provide a robust representation

Forgone Due to Intake			
Area of Production Foregone Due to Discharge	0 Acres	up to 8.13 Acres	23.43 Acres	23.43 Acres
Total Area Production Foregone	0 Acres	up to 25.03 Acres[1]	40.33 Acres[1]	40.33 Acres[1]
Brine Mixing Zone @ 35.5 ppt	7.5 Acres[2]	up to 7.4 Acres[2]	0.34 Acres[2]	0.34 Acres[2]
Area of production Foregone Due to Brine Mixing Zone	0.75 Acres	Up to 0.74 Acres	0.015 Acres	0.015 Acres
Forgone Due to Intake				
Area of Production Foregone Due to Discharge	0 Acres	up to 8.13 Acres	23.43 Acres	23.43 Acres
Total Area Production Foregone	0 Acres	up to 25.03 Acres[1]	40.33 Acres[1]	40.33 Acres[1]
Brine Mixing Zone @ 35.5 ppt	7.5 Acres[2]	up to 7.4 Acres[2]	0.34 Acres[2]	0.34 Acres[2]
Area of production Foregone Due to Brine Mixing Zone	0.75 Acres	Up to 0.74 Acres	0.015 Acres	0.015 Acres
Permanent Benthic Impacts to Marine Environment	0 Acre	0.1 Acre	0.102 Acres	0.103 Acres
Total Area Impacted Entrainment, Brine Mixing Zone and Construction	0.75 Acres	up to 32.5 Acres	40.466 Acres	40.467 Acres
Permanent Benthic Impacts to Marine Environment	0 Acre	0.1 Acre	0.102 Acres	0.103 Acres
Total Area Impacted Entrainment, Brine Mixing Zone and Construction	0.75 Acres	up to 32.5 Acres	40.466 Acres	40.467 Acres

1. Area of Production Foregone is calculated as described in Appendix E of the Staff Report for Amendment to the Water Quality Control Plan for Ocean Waters of California Addressing Desalination Facility Intakes, Brine Discharges, and the Incorporation of other Non-Substantive Changes (hereafter, "Appendix E of the Staff Report"). See Appendix T, Intake APF Calculations, Tenera 2015 and Appendix U and V, Diffuser APF Calculations, MBC 2015 and 2016
2. Brine Mixing Zone is calculated for a 6 nozzle diffuser during permanent stand-alone operations

of all forms of marine life. For example, assessing the abovementioned parameters using samples collected on one day would not adequately characterize conditions at the various intake locations, because conditions affecting the presence of marine life can be highly variable. Rather, the studies should include sampling over an adequate time period to provide an accurate assessment of all forms of marine life.

Nearshore waters generally support an abundance of organisms and diverse habitats. Siting the proposed intake for HBDP in the nearshore environment may result in higher intake and mortality of all forms of marine life, relative to siting the intake farther offshore or in deeper waters.

Poseidon submitted to Regional Water Boards staff the Technical Memo on Evaluation of a Long-Distance Offshore Intake for the Huntington Beach Desalination Plant prepared by HDR, Inc (Appendix BB). The technical memo evaluated how the larval fish density changes with increasing depth to determine if there is a biological benefit to moving the HBDP intake point farther offshore and into deeper waters. Water Boards staff provides the following comments on the technical memo:

a. The memo uses data from HBGS's 2003-2004 entrainment study and CalCOFI's 2004-2005 data. The CalCOFI sampling used a 505-µm net mesh, while the HBGS study used a 333-µm net mesh. Since the Ocean Plan specifies that samples must be collected using a mesh size no larger than 335 microns, the CalCOFI data do not meet the sampling requirements in the Ocean Plan. However, even though the HBGS used the appropriate sampling mesh net size, the data are now over 14 years old and may not be representative of current conditions. Consequently, it is not appropriate to compare the CalCOFI and HBGS data and make conclusions about the relative abundance of species farther offshore.

b. The methods used for the plankton tows performed for the two studies are absent or unclear. It is unclear if or how the tows were adjusted to account for sampling of different depth ranges.

c. In the Regional Water Board's July 29, 2016 request for additional information, Water Boards staffs indicated that Appendix BB shows the site with the least intake and mortality as 1.2 miles offshore and asked that Poseidon provide additional information to support the alternate conclusion that the proposed intake location results in the least amount of intake and mortality.

On August 8, 2016, an updated technical memo titled

				"Comparison of Existing Offshore Ichthyoplankton Data for the Huntington Beach Desalination Plant" was submitted in response to Water Boards staffs' request. The August 8, 2016 memo states that there would be no biological benefit to moving the existing intake 1.2 miles offshore because the density of fish larvae at the station farther offshore was statistically not significant from the existing intake location. The August 8, 2016 memo also states that the impacts of extending the pipeline outweigh the potential benefits and thus would not justify the construction-related impacts to the benthic environment. However, construction-related impacts to the benthic environment will mostly be temporary with some minor permanent loss of habitat. Table 1 of this Annotated Matrix provides a comparison of permanent loss of habitat, and that it is nearly equivalent for the onshore and offshore option. Table 1 does not support the conclusion that extending the pipeline will have extensive construction-related impacts to the benthic environment. Water Boards staffs reviewed the April 2005 AES HBGS Entrainment and Impingement Study, which served as one of the reference documents for the April and August memos mentioned above, and concluded the nearshore samples showed greater abundance of organisms than the offshore samples. However, Table 1 does not reflect the greater abundance of organisms in the nearshore scenario compared to the offshore scenario. Therefore, if the construction-related impacts are nearly equivalent but the extended intake would result in less intake and mortality of marine life, then the extension of the intake would be the best available to minimize intake and mortality. **<u>Please submit the following information:</u>** • **An assessment of species abundance, density, diversity, richness, and evenness and chlorophyll-a at each of the alternative sites. These assessments should be representative of all forms of marine life in the water column and benthic environment at distances of 1,800 (the proposed intake location), 3,000, and 4,000 feet from shore. Include the depth at the various distances from shore. Sampling must be done using a 335 micron mesh net, and individuals collected must be identified to the lowest taxonomical level practicable. Studies must be done using adequate sampling methods that provide an accurate assessment of all forms of marine life. Existing data from other sources may be considered by Water Boards staffs to satisfy this information request.**

				Please consult with Water Boards staffs prior to initiating the studies so we can ensure the study will meet the requirements of Chapter III.M.2.b.(4) of the Ocean Plan. • **Update Table 1 of this Annotated Matrix to include past, present, and reasonably foreseeable future anthropogenic effects (e.g. wastewater outfalls, other seawater intakes, brine discharges) and provide a narrative discussion of whether they will have an effect on all forms of marine life.**
(5) [For each potential site], Analyze oceanographic geologic, hydrogeologic, and seafloor topographic conditions at the site, so that the siting of a facility, including the intakes and discharges, minimizes the intake and mortality of all forms of marine life.	Yes	**Alternative Site Analysis** (Appendix E) Section 2.5 describes the various factors considered by the Phase I ISTAP report including the following: • Hydrogeological feasibility factor (e.g., impacts of freshwater aquifers and potential yields per installation) • Design constraints (e.g., units required for 127 MGD, linear beachfront required, onshore footprint, scalability, complexity of construction, performance risk, reliability of intake system, frequency of maintenance, complexity of maintenance, and material constraints) • Oceanographic constraints (e.g., sensitivity of sea level rise, sensitivity to Huntington Beach sedimentation rate, sensitivity to Huntington Beach bathymetry, and suitability of bottom environment conditions) • Geochemical constraints (e.g., risk of adverse fluid mixing, risk of clogging, and risk of changes on inorganic water chemistry). Additionally, Section 4.1 describes the biological and marine resources used as criteria in this analysis and Section 4.2 contains an analysis of potential direct and indirect effects of construction and operation of a desalination plant on these biological and marine resources. **Offshore Intake Studies.** The following studies analyze the oceanographic, geological and hydrogeological conditions in Pacific Ocean: 1. Appendix C - Poseidon NPDES Permit 2012 2. Appendix D, COMPLETE FINAL DRAFT SEIR WITH APPENDICES 3. Appendix H, HBDP Intake/Discharge Feasibility Analysis, Alden, March, 2016. 4. Appendix J, 2005 REIR, City of Huntington Beach 5. Appendix K, 2013 Feasibility Assessment of Shoreline Subsurface Collectors for the Huntington Beach Seawater Desalination Project, Geosyntec 6. Appendix L, 2016 Dr. Russell Detwiler technical memorandum "Review of groundwater flow modeling developed by Geosyntec to simulate pumping from slant wells beneath the beach in Huntington Beach. 7. Appendix L1, OCWD Letter, OCWD Staff Comments on the Expert Third-Party Review of WIT Hydrologic Model for the Poseidon	RCF23	In the September 1, 2016 submittal, in response to Water Boards staffs' specific information request to provide the supporting hydrogeological data and information that supports Poseidon's conclusions that subsurface intakes were infeasible at alternative sites 1A – 1D, Naval Weapons Station and Segments 6 – 9, Poseidon provided a list of references and links to geological documents. Poseidon did not provide the requisite analysis of these documents, which leads Water Board staff to conclude that Poseidon has not conducted a thorough evaluation of the geotechnical feasibility of siting subsurface intakes at a reasonable range of alternative sites. As required by the Ocean Plan, the feasibility analysis for siting a desalination facility and utilizing subsurface intakes must include a thorough, comprehensive review of all available geological and hydrogeological information, and shall be based on a clear understanding of the hydrogeologic and oceanographic conditions specific to each alternative site. <u>Segment 1 - Property 1G – H:</u> Poseidon has conducted a more robust, though still incomplete, analysis for properties 1G and 1H. To complete this analysis, please also provide the following formation. **<u>Please submit the following information for both properties in this section of segment 1:</u>** • **Identify the maximum amount of seawater that could be withdrawn through subsurface intake technologies including but not limited to: a) SIG, b) slant wells, c) beach infiltration gallery, d) horizontal directionally drilled wells, e) a water tunnel.** • **Assess the technical feasibility of using a combination of surface and subsurface intakes that would maximize the amount of source water obtained through subsurface intakes.**

		Huntington Beach Project Feb 12, 2016 8. Appendix A1, 2013 Ecosystems Management Associates, Inc. High-Resolution Offshore Geophysical Survey Huntington Beach, California 9. Appendix A2, 2014 10. Appendix A3, 2015 Geosyntec Feasibility Assessment of Shoreline Subsurface Collectors for the Huntington Beach Seawater Desalination Project 11. Appendix A4, Memo - HBDF Sphere of Influence 2015.11.09 12. Appendix A5, Life Cycle Cost Intake and Outfall 2016.03.15 13. Appendix A6, HB Geophysical Survey Revised Final 2015.06.01 14. Appendix BB, Evaluation of a Long- Distance Offshore Intake 2016.04.2016 15. Appendix GG, Orange County Groundwater Management Plan 2015 Update **Discharge Studies.** Oceanographic, geological and hydrogeological studies affecting the proposed near-shore and offshore Brine Mixing Zones are included in the following exhibits: 1. Appendix C, NPDES Permit Order No. R8-2012-0007 2. Appendix D, 2010 SEIR, City of Huntington Beach 3. Appendix H, CDP Intake/Discharge Feasibility Analysis, Alden, August 27, 2015. 4. Appendix J, 2005 REIR, City of Huntington Beach 5. Appendix M, Oceanographic and Sediment Transport Analysis of Optimal Siting of a Seabed Infiltration Gallery (SIG) at the Huntington Beach Desalination Facility, Jenkins 2014 6. Appendix R, Conventional Diffuser Retrofit at Huntington Beach Desalination, May 2014 7. Appendix S, Low-Flow Dilution Analysis Alden 6-Jet Radial Diffuser Retrofit at Huntington Beach Desalination Facility (HBDF), November 2015. 8. Appendix BB, Evaluation of a Long- Distance Offshore Intake 2016.04.2016		Directly below is a list of information request that are required for all Alternative Sites (other than IG) **<u>Please submit the following information for each alternative site, except property IG:</u>** • **A detailed and comprehensive description of the hydrogeology and subsurface geology, including names and thicknesses of aquifer(s) that extend offshore.** • **Identify the upper boundary and conductivity for all aquifers within each segment.** • **Characterize deeper (50 feet or greater) sediment samples and provide measurements of the thickness of the low permeability sediments.** • **Identify areas where subsurface intakes, including but not limited to: offshore/nearshore SIG, beach infiltration gallery, slant wells, vertical wells horizontal directionally drilled wells, and a water tunnel, could be feasible. Identify the maximum amount of source water the intake could withdraw. Indicate potential well location(s), drilling angle and target depths for slant wells, and the offshore distances for well screens.** • **Assess the technical feasibility of the SIG alternative, including the thickness of offshore sediment cover/mantle, and provide the geophysical survey data. Water Boards staffs may also require offshore seabed core sampling data if other information is insufficient or inconclusive. Include a range of sizes for the SIG alternative and the amount of source water each would be capable of withdrawing.** • **Assess the technical feasibility of using a combination of surface and subsurface intakes that would maximize the amount of source water obtained through subsurface intakes.** • **Provide seismic and erosional stability information for each of the alternative sites in the segment and the surrounding areas.** • **Provide information on erosion protection at each alternative site and include how/if the project would affect local costal restoration projects (e.g. San Gabriel River to Newport Bay Erosion Control Project).** • **Provide geologic and oceanographic (near shore) cross-sections that illustrate the subsurface**

				conditions. • **Provide information about the seafloor topography for potential discharge and intake locations at each alternative site in this segment.** Additionally, there are specific information request that vary based on the segment and the information that is already available for an alternative location. <u>Segment 1 - Properties 1A – F and Seal Beach:</u> At this site, the broad offshore submarine shelf is within a seismically active area and is in a stable depositional environment that includes an ongoing beach sand replenishment program. Data indicate that offshore conditions could support the use of a SIG or subsurface wells that could supply all or a portion of the 106 MGD intake volume for the HBDP. Based on the geologic setting, offshore conditions, depositional environment and hydrogeological data, it appears that Segment 1 may be a suitable location for subsurface intakes. Poseidon has asserted that subsurface intakes are infeasible at this location because they will impact Orange County's municipal water supply. However, siting and placement of subsurface intakes is a key component to prevent impacts on potable water supplies or seawater intrusion barrier projects. **<u>Please submit the following information for each of the 6 properties in this section of segment 1:</u>** • **Provide information on aquifer transmissivity, current rates of groundwater extraction, and potential impacts to OCWD's (or any other agency's) seawater intrusion barrier. Identify areas where the subsurface intakes could be sited to have the least effect on OCWD's seawater intrusion barrier or other existing potable water supplies. Provide well location(s), drilling angle and target depths for slant wells, including offshore distances for well screens.** <u>Segment 6 - South Laguna Beach/ Dana Point Harbor:</u> The topographic and coastal conditions in Segment 6 are similar to those of Segments 4 and 5; however, the offshore shelf area is larger in this segment. Thus, there may be a thicker mantle of sediment on the offshore shelf. The report by Dudek suggests that there would be minimal access to seawater via subsurface intake wells. However, there is insufficient hydrogeological data in the report to support this conclusion. Since there was an incomplete assessment of hydrogeological information, and the offshore shelf conditions were not fully defined in the report, there is not a sufficiently robust analysis of the feasibility of subsurface intakes in Segment 6.

				<u>Please submit the following information</u>*:* • **Provide geologic and oceanographic (near shore) cross-sections to illustrate the subsurface conditions, and define the thickness of the offshore sediment cover/mantle. Water Boards staffs may also require geophysical survey data and offshore seabed core sampling data in areas that would not impact the kelp habitat and sensitive areas.** <u>Segment 7 – Dana Point:</u> Based on the available geologic information, and the seawater extraction pilot study that is ongoing at Dana Point, it appears that sufficient sediment cover is present in the offshore area to allow the use of subsurface slant wells for a desalination facility. **<u>Please submit the following information</u>*:*** • **Subsurface extraction of seawater by the proposed Doheny Ocean Desalination Project is not sufficient to rule out segment 7. If Poseidon disagrees with this conclusion, provide studies or information to support the finding that segment 7 cannot support two desalination facilities.** • **Provide geologic and oceanographic (near shore) cross-sections to illustrate the subsurface conditions, and define the thickness and permeability of the offshore sediment cover/mantle. Water Boards staffs may also require geophysical survey data and offshore seabed core sampling data in areas that would not impact kelp habitat.** <u>Segment 8 – San Juan Creek/ Segundo Deshecha:</u> Historical reports (e.g. CA Division of Mines and Geology - Special Report 112, Geology and Engineering Geologic Aspects of the San Juan Capistrano Quadrangle, Orange County. California, 1974, and reports cited above for Segment 7), as well as more recent studies, describe the geology of the area. Based on the overall geological conditions, this segment has the potential to support subsurface intakes and the proposed HBDP. Appendix E did not present technical data that would exclude Segment 8 from future consideration for the facility. Segment 8 should be more thoroughly evaluated as a potential site for the facility. **<u>Please submit the following information</u>*:*** • **Provide geologic and oceanographic (near shore) cross-sections to illustrate the subsurface conditions, and define the thickness and permeability of the**

				offshore sediment cover/mantle. Water Boards staffs may also require geophysical survey data and offshore seabed core sampling data in areas that would not impact kelp habitat. <u>Segment 9 – San Clemente:</u> Based on the overall geological conditions, this segment has the potential to support subsurface intakes and the HBDP. Appendix E did not present technical data that would exclude the site from future consideration for the facility. Segment 9 must be more thoroughly evaluated as an alternative site for the facility. Several historical reports (e.g. those cited above for Segments 7 and 8), as well as more recent studies, include geological information about the area. **<u>Please submit the following information</u>*:*** • **Provide geologic and oceanographic (near shore) cross-sections to illustrate the subsurface conditions, and define the thickness and permeability of the offshore sediment cover/mantle. Water Boards staffs may also require geophysical survey data and offshore seabed core sampling data in areas that would not impact kelp habitat.**
(6) [For each potential site], Analyze the presence of existing discharge infrastructure, and the availability of wastewater to dilute the facility's brine discharge.	Yes	Alternative Site Analysis (Appendix E): As described in Section 4.1, commingling brine discharge from a desalination plant with an existing wastewater discharge is used as a criterion for the suitability analysis in Section 4.2, which evaluates the potential for this to occur in each segment. One of the advantages of the proposed site is the ability to comingle the HBDP's brine with the HBGS's wastewater stream during the co-located and temporary stand-alone operating scenarios and then to modify the infrastructure for the long-term stand-alone operating scenario. The HBDP's brine discharge pipeline will be connected to the existing HBGS discharge infrastructure. During HBGS co-located operations, the HBGS wastewater will serve to dilute the HBDP brine discharge. This infrastructure is available for the HBDP discharge until AES notifies Poseidon of its intent to discontinue the operation of once-through-cooling pumps serving the HBGS. It is anticipated that the HBGS will discontinue the use of the OTC system as early as December 31, 2020. Following retirement of the existing once-through-cooling system AES wastewater will no longer be available to dilute the HBDP discharge. In terms of the availability of other wastewater sources for use by the HBDP for dilution, the 2010 certified FSEIR, and the HBDP Brine Discharge Compliance with State Board Desalination Amendment (Appendix CC) evaluated the ability to comingle the Project's concentrated seawater with municipal waste water from the nearby wastewater treatment plant and determined it was not a feasible alternative. Since certification of the FSEIR in 2010, the Orange County Sanitation District ("OCSD") has	RCF 24	Water Boards staffs received a copy of OCSD's May 27, 2016 letter to Poseidon (Appendix DD) stating OCSD's intent to maximize reuse of treated wastewater. Nothing in the Ocean Plan prevents, hinders, or precludes future recycling of wastewater. However, the Ocean Plan does include a preference for commingling with wastewater that would otherwise be discharged to the ocean, as this method results in the least intake and mortality of marine life. The Ocean Plan includes adequate flexibility whereby the Regional Water Board could conditionally permit the HBDP to use commingling and then issue a new 13142.5(b) determination when the wastewater becomes unavailable for brine dilution. Water Boards staffs will continue to follow up with OCSD staff about the availability of wastewater for dilution of the HBDP brine. OCSD has indicated to Regional Water Board staff that there may be sufficient volume available to discharge HBDP brine through their existing outfall. The Alternative Sites Analysis (Appendix E) describes existing wastewater discharges in Segments 6 (SOCWA's Aliso Creek Ocean Outfall) and 7 (SOCWA JB Latham Treatment Plant's San Juan Creek Ocean Outfall). Although Segment 8 does not contain any existing wastewater discharges that could be used for commingling, the Appendix E states that the San Juan Creek Ocean Outfall exists in the central portion of Segment 7. A desalination plant located in Segment 7 or Segment 8 may

		adopted a 5-year Strategic Plan that establishes a goal of 100% re-use of its effluent.2 Furthermore, the Orange County Water District ("OCWD") anticipates recycling the remaining effluent from OCSD's Plant 2 for the final phase of its Groundwater Replenishment System.3 OCSD provided the Regional Board with a May 27,2016 letter (See Appendix DD) that states: "*Wastewater Ordinance does not currently allow disposal of concentrated seawater from a desalination plant directly to the outfall, and OCSD's treatment plant is not able to treat concentrated sea water through its wastewater treatment process. In order to approve such a discharge, OCSD's Board of Directors would need to amend its Wastewater Ordinance, and an extensive technical, engineering and environmental analysis would first be required before the feasibility of utilizing OCSD Treatment Plant No. 2 could be determined.* *"OCSD Treatment Plant No. 2 includes a 120-inch, 4.5-mile ocean outfall that today discharges an average of 80 million gallons per day (MGD) of treated wastewater to the ocean. OCSD has adopted a 5-year Strategic Plan that establishes a goal for Future Water Recycling – Determine partnerships, needs, strategies benefits and costs associated with recycling of Plant No. 2 effluent water. In this regard OCSD is working with the Orange County Water District (OCWD) on the final phase of the Groundwater Replenishment System (GWRS) which will reduce the long-term wastewater discharge from Treatment Plant No. 2 by an estimated 30 MGD. The remaining 50 MGD of effluent will have an estimated salinity of approximately 3 ppt. This anticipated reduction in wastewater flows does not take into account additional wastewater recycling efforts that could further reduce long-term discharge volumes. We understand the proposed Huntington Beach Desalination Project is designed to withdraw an annual average of 106 MGD and discharge back to the ocean an average of 56 MGD of concentrated seawater with a salinity level of approximately 63 ppt. As such, it is not anticipated that future wastewater discharges at Treatment Plant No. 2 would be adequate to meet the receiving water limitations for salinity for either partial or full discharge of the desalination plant's 56 MGD discharge through OCSD's ocean outfall."* Because commingling the Project RO concentrate with municipal wastewater is not feasible, the Project will include a retrofit of the existing HBGS infrastructure with a multiport diffuser to ensure compliance with Desalination Amendments' requirement that receiving water salinity not be increased more than 2 ppt at a 100-meter distance from the discharge point regardless of the flows of the HBGS. The physical modifications to the existing HBGS outfall facility will occur prior to Project commercial operations.		be able to commingle brine with the San Juan Creek Ocean Outfall. Poseidon's Brine Discharge Evaluation (Appendix CC) indicates that these outfalls are not feasible if the HBDP is constructed at the proposed site adjacent to HBGS, due to distance and inability for the San Juan Creek Ocean Outfall to provide adequate dilution for the total brine discharge from HBDP. Accordingly, Water Boards staffs are requesting additional evaluation of the feasibility of diverting a portion of HBDP's brine discharge to these outfalls and the marine life mortality associated with this discharge option. **<u>Please submit the following information:</u>** • **The average and maximum volume of effluent OCSD currently discharges as well as the volume of effluent OCSD projects to discharge 5, 10, 20, and 30 years from now.** • **The salinity of OCSD's effluent and if this is expected to change over the next 5-30 years.** • **The maximum volume that can be discharged through OCSD's existing outfall.** • **For the San Juan Creek and Aliso Creek Ocean Outfalls, please provide all the information listed in the three previous bullet points.** • **To the extent information regarding marine life at the OCSD, San Juan Creek, and Aliso Creek Outfalls is not available, Poseidon may need to provide that information in order to determine whether any of these outfalls would better protect all forms of marine life from mortality than the proposed discharge location.** • **The technical feasibility of transporting brine from the proposed site to OCSD's outfall.**
(7) [For each potential site], Ensure that the intake and discharge structures are not located within a MPA or SWQPA with the exception of intake structures that do not have marine life mortality associated with the construction, operation, and maintenance of the intake structures (e.g. slant wells). Discharges shall be sited at a	Yes	Alternative Site Analysis (Appendix E) Section 4.1 establishes the presence of an MPA or ASBS (i.e., SWQPA) as criteria for evaluating the suitability of various intake and discharge technologies in each of the study area segments. The amount of MPA and ASBS designated areas and the potential effects on these areas from siting a desalination plant in each of the study area segments is evaluated in Section 4.2. The proposed Project's intake and discharge structures are not located	RCF 25	Noted. The Ocean Plan includes preferences for subsurface intakes and commingling brine discharge with wastewater, to minimize intake and mortality of all forms of marine life. To date, Water Boards staffs have not been provided with sufficient information to determine that subsurface intakes nor commingling of brine with wastewater are infeasible.

sufficient distance from a MPA or SWQPA so that the salinity within the boundaries of a MPA or SWQPA does not exceed natural background salinity. To the extent feasible, surface intakes shall be sited so as to maximize the distance from a MPA or SWQPA.		within a MPA or SWQPA and the HBDP's discharge will be sited at a sufficient distance from MPA or SWQPA so that the salinity within the boundaries of a MPA or SWQPA does not exceed natural background salinity. (see Appendix W) The nearest ocean MPA or ocean SWQPA that is of similar marine ecosystem is located approximately 8 miles south of the HBDP. (see Figure 1) 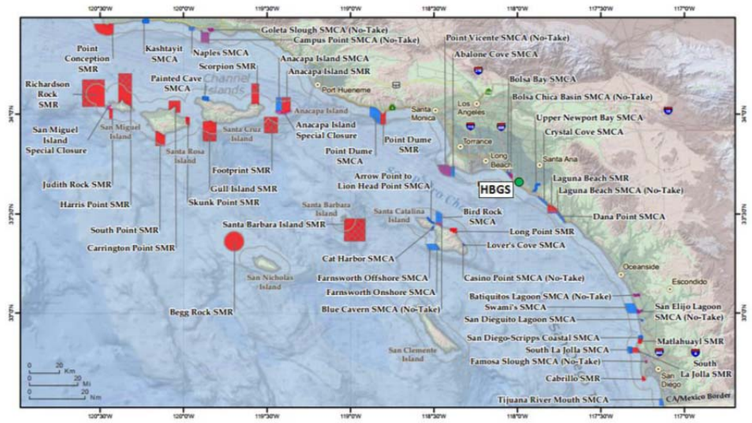 **Figure 1. Location of the proposed co-located HBGS/HBDP facility in relation to the southern California MPA network. The red and blue shaded areas represent the different MPA designations. Red represents State Marine Reserves and blue represents State Marine Conservation Areas. Source California Department of Fish and Wildlife website:www.dfg.ca.gov/marine/images/mpamaps/scmpas.jpg.**		
c. **Design**				
Design is the size, layout, form, and function of a facility, including the intake capacity and the configuration and type of infrastructure, including intake and outfall structures. The regional water board shall require that the owner or operator perform the following in determining whether a proposed facility design is the best available design feasible to minimize intake and mortality of all forms of marine life:	Yes	Noted.	RCF 26	The Ocean Plan requires consideration of design alternatives because careful consideration of design alternatives can result in a facility that has reduced intake and mortality of all forms of marine life over the operational lifetime of a facility. For example, if a facility uses the best available design feasible for the RO train, the optimized system will result in increased production efficiency. Production efficiency is the volume of potable water produced over the volume of seawater withdrawn. If the facility increases production efficiency (relative to a non-optimized RO train), the facility will pull in less seawater, which results in less intake and mortality of marine life. Another example of investigating best available design alternatives would be evaluating whether siting the intake and/or discharge father offshore, or up or down coast, would reduce marine life mortality To date, Poseidon has submitted information that has largely been focused on Property 1G and a fairly singular project design for the HBDP. Poseidon did not submit information contemplating a range of best available design alternatives at Property 1G or at the alternative sites identified in RCF 18.

				The documents that Poseidon submitted explain, in general terms, that 106 MGD of seawater would be needed to produce 50 MGD of product water, which includes 100 MGD of seawater for desalination through RO technology, with a 50% recovery rate, and about 7 MGD of backwash water supply for the operation of conventional sand filters (seawater pretreatment process). But the documents do not provide a discussion of why this design is the best available feasible to minimize intake and mortality of all forms of marine life. Alternative Site Analysis (Appendix E) Section 4.1 generally describes the biological and marine resources at the proposed site and alternative sites. Section 4.2 generally describes intake and discharge options within each segment, but does not include adequate detail or contemplation of design alternatives that would minimize intake and mortality of all forms of marine life. For example, Section 4.2 states that, "locating a desalination plant with a brine discharge, including a multi-port diffuser, in Segment 7 could negatively affected [sic] these sensitive areas and marine habitats depending on the specific siting, design, and technology of brine discharge used." But Section 4.2 does not describe how the desalination plant could be designed to avoid effects to marine life within the segments. For each alternative site, Poseidon must evaluate the best available design feasible to minimize intake and mortality of all forms of marine life. Water Boards staffs are willing to meet with Poseidon to consider narrowing the focus to a smaller number of potential sites for which a more comprehensive analysis of best available design feasible may better serve the needs of both Poseidon and the Regional Water Board, and meet the requirements of the Desalination Amendment. **<u>Please submit the following information:</u>** • **For each alternative site, provide an analysis of the intake and mortality associated with each alternative designs for surface water intakes, discharges, and other facility infrastructure, including the specific information required in Chapter III.M.2.c(1)-(5) of the Ocean Plan, described in detail below. Water Boards will use the information to determine the best available design feasible to minimize intake and mortality of all forms of marine life.** • **For all alternative sites, a description of how the desalination treatment train is optimized to minimize intake and mortality of all forms of marine life (e.g., maximized production efficiency). If there are changes**

				to design elements that would reduce the intake of seawater or chemical use that are not being used, please explain why not. Evaluate if there are other methods to reduce intake and mortality of marine life by making modifications to the desalination treatment train (e.g. optimizing pretreatment or backwash systems to reduce chemical use or intake of seawater). Describe if these methods could be implemented or why not. • **Provide a detailed description of the chemicals or additives including, biocides, antifoulants, antiscalants, etc. proposed to be used during the operation of the proposed facility. Include the chemicals or constituents used throughout the desalination treatment process from the intake to potable water production, to the discharge of the brine (pretreatment, RO, post treatment, etc.); concentrations of chemicals and constituents; frequency of use; how and where the waste streams will be discharged; and the volume of discharges.**
(1) For each potential site, analyze the potential design configurations of the intake, discharge, and other facility infrastructure to avoid impacts to sensitive habitats and sensitive species.	Yes	See RCFs 19, 21, 22, 23, 25, 27, 28, 33a ,33b, 34 and 35	RCF 27	Please see Water Boards staffs' comments in RCF 26. Poseidon described the sensitive habitat and sensitive species in each segment, but did not provide sufficient data for alternative design configurations of the intake, discharge, and other facility infrastructure that could avoid impacts to sensitive habitats and sensitive species for the other alternative sites identified in RCF 18. **<u>Please submit the following information:</u>** • **Analyze alternative design configurations of the intake, discharge, and other facility infrastructure to avoid impacts to sensitive habitats and sensitive species at the alternative sites identified in RCF 18. For the proposed discharge site (Property 1G), include a discussion for each discharge scenario (i.e., co-located, temporary stand-alone, permanent stand-alone).** • **Provide a discussion of how the wedgewire screens will be oriented and designed to minimize or eliminate impingement.**
(2) If the regional water board determines that subsurface intakes are not feasible and surface water intakes are proposed instead, analyze potential designs for those intakes in order to minimize the intake and mortality of all forms of marine life.	Yes	As documented in RCF 19 and 33a, an analysis of relevant geotechnical data, hydrogeology, benthic topography, oceanographic conditions, presence of sensitive habitats and presence of sensitive species, energy use for the entire facility, design constraints, and project life cycle costs demonstrates that various subsurface seawater intake alternatives are not feasible for the HBDP. Poseidon proposes to retrofit the existing HBGS intake and discharge structures to address the seawater intake and brine dilution requirements for the HBDP. Poseidon has analyzed the following surface intake and designs	RCF 28	The Regional Water Board has not yet determined the feasibility of subsurface intakes. Intake screens are a surface intake technology that can minimize intake and mortality of marine life, but it may be possible to optimize the screen to minimize intake and mortality of marine life. There may be other design elements of the intake and discharges that would reduce intake and mortality of marine life. **<u>Please submit the following information:</u>** • **Describe how the proposed intake, discharge, and**

		to minimize the intake and mortality of all forms of marine life: (1) an offshore screened surface intake; and (2) an onshore screened surface intake (see Appendix AA and JJ), and is proposing an offshore 1 mm wedgewire screen with a through-screen velocity of 0.5 ft. per second or less to be installed after the decommissioning of the HBGS' once through cooling water system. An environmental analysis (see Appendix HH) has been prepared to augment the 2010 Final SEIR that evaluates the implementation of the offshore 1 mm wedgewire screen in combination with the bribe diffuser. 1 mm Wedgewire Screen Offshore Surface Intake Alternative. Intake water would be withdrawn directly from the HBGS intake pipeline rather than from the HBDP's existing intake connection to the HBGS discharge pipeline. Under long term stand-alone operations, HBDP will withdraw approximately 106.7 MGD for the HBDP source water directly from the ocean. The HBDP will remove the salt from 50 MGD for potable water distribution, and 6.7 MGD for backwash and subsequent rinse water (33.5 ppt) returning 56.7 MGD (about 87 cfs) to the system with about twice the initial ocean salinity. Therefore, the initial ocean salinity of 33.5 ppt is increased to about 63.1 ppt in the brine discharge. The offshore portion of the existing HBGS intake structure would be modified to include 1-mm cylindrical wedgewire screens. Appendix H and JJ) The array would be installed on a new header connected to the existing HBGS intake tower located 1,840 ft offshore (Figure 2). Feedwater for the HBDP would be withdrawn through the new 1-mm wedgewire screens and conveyed through the existing HBGS intake structures downstream of that point (i.e., through the existing intake pipeline and the onshore screen well). Through-screen velocities were designed to meet the 0.5-ft/sec criterion to minimize impingement, and the 1.0-mm screen mesh size was selected to minimize impingement and entrainment of marine organisms. There would be no change in the source waterbody nor would the new screening structure require any heavy shoreline construction. Construction would be done from a derrick barge moored above the tower. Work offshore would be confined to the area directly surrounding the tower and to and from the Port of Long Beach.		**other facility infrastructure have been optimized to minimize intake and mortality of all forms of marine life for the proposed discharge site (Property 1G). Include a discussion for each discharge scenario (i.e., co-located, temporary stand-alone, permanent stand-alone).**

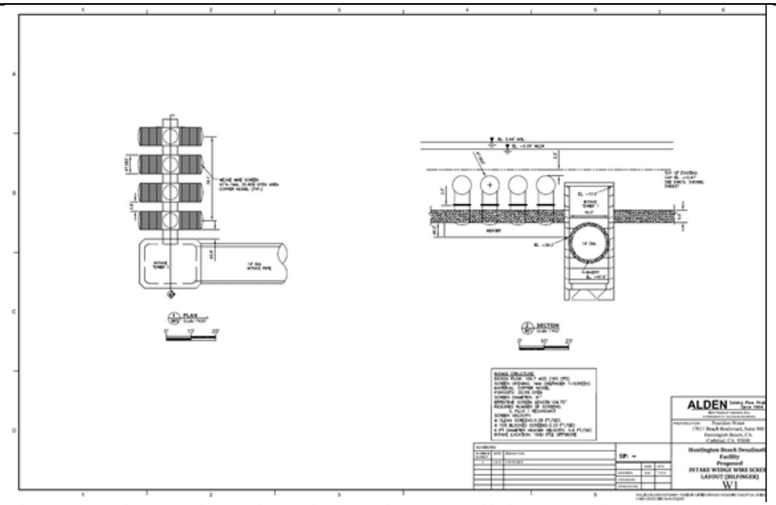

Figure 2. Plan and section views of 1-mm offshore wedgewire screens for long-term stand-alone operation.

The offshore wedgewire screens would be installed on a new header connected to the existing HBGS intake tower. The new header would be constructed as sequenced below:

- Remove rip-rap
- Dredge to header invert to drive pile foundations
- Set pipe saddle supports and make single concrete core in existing intake tower
- Set pipe header and strap to saddle supports
- Backfill header with native fill
- Set wedgewire screens
- Set flange boxes and replace rip-rap backfill
- Demolish velocity cap and install bulkhead on intake tower
- Commence flow through wedgewire screens

The array would be comprised of four 91-inch diameter wedgewire screens (3 plus one redundant) from Bilfinger Water Technologies (BWT) (or equal) with 1.0-mm slot widths (Figure 3). The overall screen lengths would be approximately 26 ft with an effective screening area of 104.75 inches each. Screens will be spaced one half of a screen diameter from each other to maximize the sweeping velocities between screens to sweep debris and organisms away.

To minimize the risk posed by biofouling in the open ocean, the screens will be constructed of a copper nickel alloy (Z Alloy) or a similar material to prevent biofouling. Due to the distance offshore (1,840 ft), a shore-based air burst system would not be feasible; therefore, provisions could be made to allow temporary connection of a boat-based compressor to clean the screens. In addition, the screens will be manually cleaned periodically by divers.

		The screens are designed to maintain a through-slot velocity of less than 0.5 ft/sec under all expected operating conditions. The design includes a fouling factor of 15%. All screens will be operable when the long-term stand-alone operational mode for the plant is online, meaning the through-slot velocity will be well below 0.5 ft/sec. Wedgewire screens have been biologically effective in preventing entrainment and impingement of fish and have not caused unusual maintenance problems in freshwater applications. However, there are no commercial scale seawater desalination plants using 1 mm wedgewire screens in a marine environment. A wedgewire screen maintenance plan (See Appendix II) addresses various means and methods for maintaining the proposed screening system. 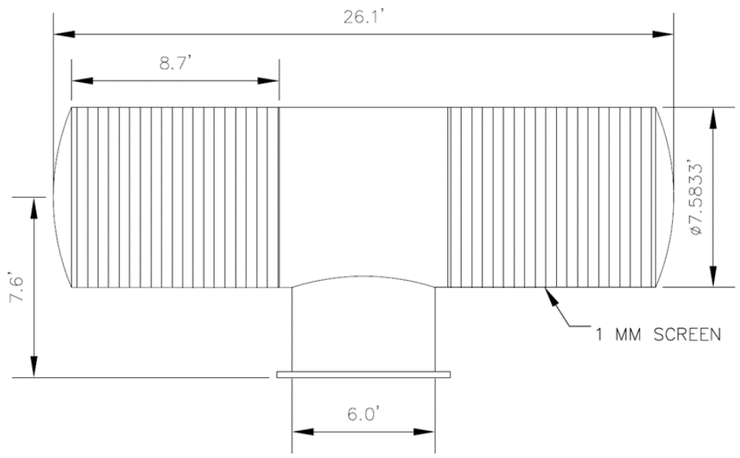 **Figure 3. 91-in diameter cylindrical wedgewire screen** **Discussion:** Poseidon is proposing an offshore 1mm wedgewire screens because this technology should be technical feasibility in an ocean environment.		
(3) Design the outfall so that the brine mixing zone does not encompass or otherwise adversely affect existing sensitive habitat.	Yes	See RCF 19 through RCF 26 above	RCF 29	Please see Water Boards staffs' comments in RFC 26 and 27.
(4) Design the outfall so that discharges do not result in dense, negatively buoyant plumes that result in adverse effects due to elevated salinity or hypoxic conditions occurring outside the brine mixing zone. An owner or operator must demonstrate that the outfall meets this requirement through plume modeling and/or field studies. Modeling and field studies shall be approved by the regional water board in consultation with State Water Boards staff.	Yes	Multiport Diffuser. A 6-port multiport diffuser design allows the HBDP co-located, temporary and long term stand-alone operation. The 6 nozzle diffuser is required to handle the additional discharge capacity (up to 387 MGD) of the HBGS if the Regional Board requires the diffuser to be installed prior to the decommissioning of HBGS's cooling water system. Once the HBDP transitions to stand-alone operations, 4 of the 6 nozzles will be sealed. The 4 nozzle diffuser is designed to handle only the HBDP discharge capacity of 56.7 mgd and would be installed prior to commercial operations. The diffuser design will promote rapid mixing so to prevent the formation of dense, negatively buoyant plumes that could result in adverse effects due to elevated salinity or hypoxic conditions occurring outside the brine mixing	RCF 30	On June 30, 2016, Poseidon submitted the report of waste discharge for the HBDP and specified the multiport diffuser designs for co-located, temporary stand-alone, and permanent stand-alone operations. Poseidon submitted a report modeling the multiport diffusers for the operating scenarios titled, "Initial Dilution in a Quiescent Ocean Due to Discharges of Concentrated Seawater from the Huntington Beach Desalination Facility (HBDF)" (Attachment 9) in the September 1, 2016 response to the Regional Board's July 29, 2016 letter. While the information Poseidon submitted discusses multiport diffusers as they relate to salinity, the reports do not evaluate

		zone, which would be verified through receiving water monitoring. During co-located and temporary stand-alone operations, the 6-port diffuser the brine mixing zone.		the potential for hypoxic conditions that may occur outside the brine mixing zone. **<u>Please submit the following information:</u>** • **For each alternative site, provide an analysis that includes dissolved oxygen concentrations of the brine plume and the receiving waters. The assessment of the receiving waters should include data from within the brine mixing zone and beyond the brine mixing zone and needs to provide information from the seafloor up through the brine plume. For the proposed discharge site (Property 1G), include an analysis for each discharge scenario (i.e., co-located, temporary stand-alone, permanent stand-alone).** • **For each alternative site, demonstrate through modeling that hypoxic conditions do not occur outside the brine mixing zone. Include the model inputs with sufficient detail so the analysis can be replicated. For the proposed discharge site (Property 1G), include an analysis for each discharge scenario (i.e., co-located, temporary stand-alone, permanent stand-alone).**
(5) Design outfall structures to minimize the suspension of benthic sediments.	Yes	Poseidon has designed the brine discharge multiport diffuser to minimize the suspension of benthic sediments. The diffuser system would be elevated off the seafloor and oriented so to minimize the suspension of benthic sediments in accordance with the provisions of the Ocean Plan. The existing discharge will be modified to install a multiport diffuser cap on the existing discharge tower. A new multiport diffuser system would be located approximately 1,500 feet offshore, 8 miles north of the nearest ocean MPA. During installation of the diffuser cap, the rip-rap surrounding the tower will be side-cast, the tower will be lowered to maintain the existing tower height with the diffuser in place, the diffuser cap will be installed, and the rip-rap will be replaced around the new diffuser enlarging the rip-rap footprint by approximately 4,000 sq. ft. Construction would be done from a derrick barge moored above the tower. Work offshore would be confined to the area directly surrounding the tower (approximately 1,500 feet offshore) and the water to and from the Port of Long Beach. A general schematic of the layout is provided in Figure 4.	RCF 31	The dilution study (Attachment 9) does not contain any information about suspension of benthic sediments, but rather states that it will not occur because the plume velocities will be substantially reduced by the time it reached the seafloor. However, the plume velocity at the seafloor was not provided. Additionally, the diffusers were designed at 47 degrees to provide a longer arched flow path and more dilution prior to the brine interacting with the bottom where dilution is limited to the upper side of the plume. The longer flow path also results in greater dissipation of velocity. If this is the case, it would seem that increasing the diffuser angle to 50 or 60 degrees would further reduce the plume velocity once it reaches the seafloor, which would further reduce the likelihood of suspending benthic sediments. **<u>Please submit the following information:</u>** • **Provide a discussion of why the diffusers are being proposed at 47 degrees versus 50, or 60 or some other angle. Include an analysis of the velocity of the brine plume at the point in which it interacts with the seafloor.** • **For each alternative site (discharge location), describe if the plume velocity would be different at the point when it reaches the seafloor and a discussion of whether or not the velocity of the plume would result in the suspension of benthic sediments. Also include a discussion of the type of sediment and grain size at the proposed discharge site and any alternative discharge**

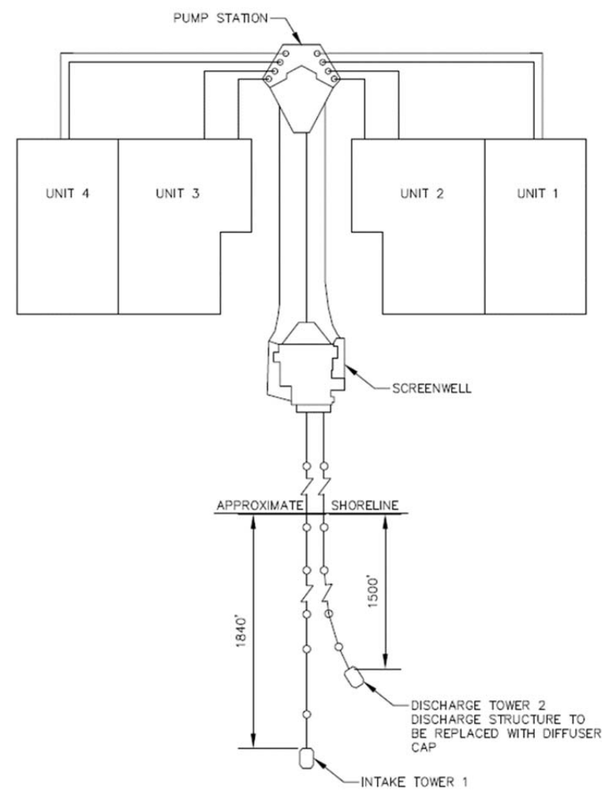

Figure 4. General Schematic of the layout of the HBDP discharge diffuser location.

6-Nozzle Multiport Diffuser. The offshore discharge tower will be modified to incorporate a diffuser cap. The proposed diffuser has six fixed ports (Figure 7); the number and diameter were selected to produce an initial discharge velocity of about 10 ft/sec for either co-located operation or for long-term stand-alone operation. By having all ports open with the HBDP and the HBGS running with all operational pumps, the initial discharge velocity will be 10.8 ft/sec (Table 2). With only the two 30-inch ports open during long-term stand-alone operation of the HBDP, the initial discharge velocity will be 10 ft/sec. Based on the trajectory, these brine discharges do not interact with the ocean floor until the plume velocities have been substantially reduced.

In plan view, the diffuser ports (pipes) are generally oriented to provide a net off-shore momentum. The horizontal angles between the 42-inch and 30-inch pipes vary from 30 to 45 degrees to provide adequate flow separation for entrainment of ambient ocean water into each discharge jet and to fit the pipes into the available space.

Flow to the ports (pipes) would come from a new common plenum under the

location and how that will affect the resuspension of benthic sediments. For the proposed discharge site (Property 1G), include a discussion for each discharge scenario (i.e., co-located, temporary stand-alone, permanent stand-alone).

tower cap, which would otherwise be sealed. The plenum with imbedded pipes would sit on top of the existing tower after the existing grating is removed and the outfall tower would be lowered to maintain the existing tower height with the diffuser in place are removed; all other existing elements of the tower and the 14 ft diameter supply pipe would be used.

Initial dilution of the brine discharge depends on the initial discharge velocity, its direction, the density of the brine versus the ambient ocean water and the magnitude and direction of any ocean currents. The ambient ocean water has a salt concentration of about 33.5 ppt and a density of 1025 kg/m3, whereas the brine has a salt concentration of about 63.1 ppt and a density of 1046.21 kg/m3. To help prevent the brine from sinking immediately after discharge, the ports are inclined upward at 47 degrees. This provides a longer arched flow path and more dilution prior to the brine interacting with the bottom where dilution is limited to the upper side of the plume. The longer flow path also results in greater dissipation of velocity.

After reaching a maximum height, the brine plume will start to sink due to its greater (although diluted) density. As it sinks, further dilution and dissipation of velocity occurs. During HBDP operations the discharge will reach a salinity level of approximately 35.5 ppt within 321 ft. (98 m) . from the discharge tower, maximum velocities reach approximately 10 ft/s and flow induced shear therefore occurs prior to the brine plume interacting with the sea floor. After that point, the brine plume becomes a density current which is advected and dispersed further by ambient ocean currents.

In plan view (Figure 7), the discharge ports are oriented generally offshore to allow for the initial dilution water to flow unimpeded from the shore side of the diffuser. The net off-shore momentum propels the plume into deeper water to enhance dispersion of the brine with higher ocean currents than occur near the shoreline.

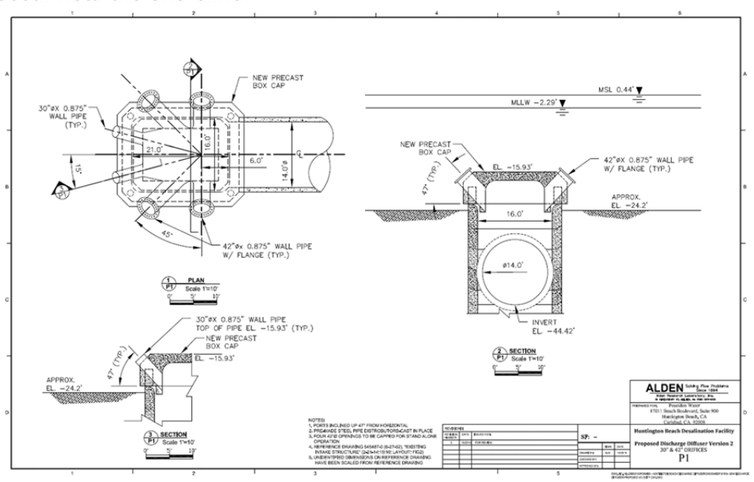

Figure 5. Conceptual design of proposed diffuser to be added to the top of the HBGS discharge tower.

Table 2. Initial diffuser discharge velocities for various operating modes.

	Design Conditions				
Operating Description	Flow (mgd)	Flow (cfs)	Discharge Velocity (ft/sec)	Number of Pipes	Pipe Description
Long term Stand-alone Desal	56	87	10.0	2	30" pipe
HBGS Only	387	599	12.4	6	30" pipe, 42" pipe
Desal & HBGS, 100% HBGS flow	337	521	10.8	6	30" pipe, 42" pipe
Desal & HBGS, 75% HBGS flow	240	372	7.7	6	30" pipe, 42" pipe
Desal & HBGS, 50% HBGS flow	144	222	4.6	6	30" pipe, 42" pipe
Temp Stand-alone Desal	56	87	1.8	6	30" pipe, 42" pipe

Tabe 2 reproduced for readability below.

	Design Conditions				
Operating Description	**Flow (mgd)**	**Flow (cfs)**	**Discharge Velocity (ft/sec)**	**Number of Pipes**	**Pipe Description**
Long-term Stand-alone Desal	56	87	10.0	2	30" pipe
HBGS Only	387	599	12.4	6	30" pipe, 42" pipe
Desal & HBGS, 100% HBGS flow	337	521	10.8	6	30" pipe, 42" pipe
Desal & HBGS, 75% HBGS flow	240	372	7.7	6	30" pipe, 42" pipe
Desal & HBGS, 50% HBGS flow	144	222	4.6	6	30" pipe, 42" pipe
Temp Stand-alone Desal	56	87	1.8	6	30" pipe, 42" pipe

Due to the higher velocity from the diffuser pipes (compared to using the open top tower for the HBGS operation), there will be an increase in the pipeline/tower pressure of about 2.0 ft compared to the present conditions. This increase in back pressure will exist for all tide levels and will be transmitted by the pipeline to the structures on shore. Thus, there will be a small increase in the pump back pressure and any free surfaces in the discharge system. The tower/pipeline pressure creates an upward force on the diffuser cap which is countered by its submerged weight. Using the total pressure head produced under the cap of 2.35 ft, preliminary sizing of the diffuser cap indicates its submerged weight would be about twice the upward force.

When the HBDP Transitions to long-term stand-alone, the diffuser placed on

the outfall during co-located and temporary stand-alone operations will be modified to transition the HBDP discharge to long-term stand-alone. The four 42-inch nozzles on the diffuser will be sealed off, only having the two 30-inch nozzles available for the HBDP long-term stand-alone discharge. With only the two 30-inch ports open during long-term stand-alone operation of the HBDP, the initial discharge velocity will be 10 ft/sec (Table 3). Based on the trajectory, these brine discharges do not interact with the ocean floor until the plume velocities have been substantially reduced.

In plan view, the diffuser ports (pipes) are generally oriented to provide a net off-shore momentum. The horizontal angles between 30-inch pipes 30 degrees to provide adequate flow separation for entrainment of ambient ocean water into each discharge jet and to fit the pipes into the available space.

Flow to the ports (pipes) would come from a new common plenum under the tower cap, which would otherwise be sealed. The plenum with imbedded pipes would sit on top of the existing tower after the existing grating is removed and the outfall tower would be lowered to maintain the existing tower height with the diffuser in place; all other existing elements of the tower and the 14 ft diameter supply pipe would be used.

Initial dilution of the brine discharge depends on the initial discharge velocity, its direction, the density of the brine versus the ambient ocean water and the magnitude and direction of any ocean currents. The ambient ocean water has a salt concentration of about 33.5 ppt and a density of 1025 kg/m3, whereas the brine has a salt concentration of about 63.1 ppt and a density of 1046.21 kg/m3. To help prevent the brine from sinking immediately after discharge, the ports are inclined upward at 47 degrees. This provides a longer arched flow path and more dilution prior to the brine interacting with the bottom where dilution is limited to the upper side of the plume. The longer flow path also results in greater dissipation of velocity.

After reaching a maximum height, the brine plume will start to sink due to its greater (although diluted) density. As it sinks, further dilution and dissipation of velocity occurs. During HBDP operations the discharge will reach a salinity level of approximately 35.5 ppt within 321 ft. (98 fm) from the discharge tower), maximum velocities reach approximately 10 ft/s and flow induced shear therefore occurs prior to the brine plume interacting with the sea floor. After that point, the brine plume becomes a density current which is advected and dispersed further by ambient ocean currents.

In plan view, the discharge ports are oriented generally offshore to allow for the initial dilution water to flow unimpeded from the shore side of the diffuser. The net off-shore momentum propels the plume into deeper water to enhance dispersion of the brine with higher ocean currents than occur near the shoreline.

Table 3. Initial diffuser discharge velocities for various operating modes.

		Design Conditions Operating Description: Long-term Stand-alone Desal Flow (mgd): 56 Flow (cfs): 87 Discharge Velocity (ft/sec): 10.0 Number of Pipes: 2 Pipe Description: 30" pipe Due to the higher velocity from the diffuser pipes (compared to using the open top tower for the HBGS operation), there will be an increase in the pipeline/tower pressure of about 2.0 ft. compared to the present conditions. This increase in back pressure will exist for all tide levels and will be transmitted by the pipeline to the structures on shore. Thus, there will be a small increase in the pump back pressure and any free surfaces in the discharge system. The tower/pipeline pressure creates an upward force on the diffuser cap which is countered by its submerged weight. Using the total pressure head produced under the cap of 2.35 ft, preliminary sizing of the diffuser cap indicates its submerged weight would be about twice the upward force.		
d. Technology				
Technology is the type of equipment, materials, and methods that are used to construct and operate the design components of the desalination facility. The regional water board shall apply the following considerations in determining whether a proposed technology is the best available technology feasible to minimize intake and mortality of all forms of marine life:			RCF 32	The Ocean Plan includes specific considerations for intake and discharge technologies because utilizing the preferred technologies can result in a significant reduction or elimination of intake and mortality of all forms of marine life over the operational lifetime of a facility. For example, a facility that uses slant wells (subsurface intakes) and commingles the brine discharge could potentially have no construction or operational marine life mortality. A facility that uses a surface water intake with a 1.0 mm wedgewire screen and discharges brine through multiport diffusers could have marine life mortality associated with construction and impingement, entrainment, elevated salinity, and shearing-related mortality over the operational lifetime of the facility, which may be 30 or 50 years. This is why it is important for the Water Boards to carefully evaluate whether the preferred technologies are feasible. To date, Poseidon has submitted a large volume of information, but the information does not include all of the specific information that the Water Boards will need to determine the best available technology feasible for the HBDP. Poseidon did submit information for a specific project design at Property 1G that purports to utilize the best available technology feasible, but the documents do not provide adequate support for that claim for the HBDP as proposed. For each alternative site, Poseidon must evaluate the best available technology feasible to minimize intake and mortality of all forms of marine life. The specific information requirements are described below and in other RCFs as noted. Water Boards staffs are willing to meet with Poseidon to consider narrowing the focus to a smaller number of potential sites for which a more comprehensive analysis of best available design

				feasible may better serve the needs of both Poseidon and the Regional Water Board, and meet the requirements of the Desalination Amendment.
(1) Considerations for Intake Technology:		Alternative subsurface seawater intakes are not feasible as discussed in RCF 19.		Water Boards staffs do not have sufficient information to determine feasibility of subsurface intakes. Please see Water Boards staffs' comments in RCF 32.
(a) Subject to chapter M.2.a.(2), the regional water board in consultation with State Water Boards staff shall require subsurface intakes unless it determines that subsurface intakes are not feasible based upon a comparative analysis of the factors listed below for surface and subsurface intakes. A design capacity in excess of the need for desalinated water as identified in chapter III.M.2.b.(2) shall not be used by itself to declare subsurface intakes as not feasible.		The feasibility of various intake configurations (vertical wells, slant wells, horizontal wells, offshore subsurface infiltration galleries, and the existing HBGS intake) was extensively evaluated and analyzed in the City of Huntington Beach's 2010 Final SEIR for the Seawater Desalination Project at Huntington Beach (see Appendix D); Regional Water Board's 2012 Order No. R8-2012-0007, NPDES No. CA8000403 and Water Code 13142.5(b) determination for the Huntington Beach Desalination Project (see Appendix C); 2014-15 California Coastal Commission's ISTAP reports (see Appendix F and G); 2015 technical memorandum by Geosyntec entitled *Feasibility Assessment of Shoreline Subsurface Collectors for the Huntington Beach Seawater Desalination Project* (Appendix K) and 2016 Dr. Russell Detwiler technical memorandum "Review of groundwater flow modeling developed by Geosyntec to simulate pumping from slant wells beneath the beach in Huntington Beach." Appendix K); the Orange County Water District ("OCWD") Staff Comments on the Expert Third-Party Review of WIT Hydrologic Model for the Poseidon Huntington Beach Project (see Appendix L) A thorough review of the site-specific applicability of subsurface intake technology supported by a comprehensive oceanographic, geological and hydrogeological studies of the subsurface conditions in the vicinity of the HBDP concluded that the subsurface intakes studied at that time were not feasible due to limited production capacity of the subsurface geological formation, poor water quality of collected source water, excessive cost, and environmental considerations. The City of Huntington Beach and the Regional Water Board concluded that due to limited production capacity of the subsurface geological formation, excessive cost, and environmental considerations (i.e., construction impacts, operational impacts, and aesthetics), the Beach wells, slant wells, and horizontal wells are not feasible. Any one of the site-specific conditions would render subsurface intakes more impactful to the environment than the project because it would result in either irreversible damage to the Talbert Marsh, Brookhurst Marsh, and the Magnolia Marsh and negate years of restoration measures, result in a number of negative environmental impacts and human health risks, including the following: (1) detrimental environmental impact of intake well operations on the adjacent Talbert Marsh, Brookhurst Marsh, and the Magnolia Marsh due to potential dewatering; (2) poor water quality of the Talbert Aquifer in terms of ammonia, bacterial contamination and lack of oxygen; (3) potential interception of contaminated groundwater from nearby Ascon Landfill, which may introduce carcinogenic Hydrocarbons in the Source water supply of the desalination facility; (4) possible interception of injection water from Talbert Barrier by the intake which may impair the function of this barrier to protect	RCF 33a	This section of the Ocean Plan established a rebuttable presumption in which the Regional Water Board in consultation with the State Water Board must require the use of subsurface intakes at the HBDP unless it determines that subsurface intakes are not feasible. Poseidon has submitted information that asserts that subsurface intakes are not feasible for the proposed site and alternative sites. However, the Water Boards do not have sufficient information to support that conclusion. Other RCFs, such as RCF 23, include the requisite information requests; the requests are not repeated here. The analyses for the 2012 Order and accompanying 13142.5(b) determination for the HBDP were completed before the adoption of the Desalination Amendment to the Ocean Plan. As stated in RCF 1, the 2012 Order and the associated 13142.5(b) determination are invalid for the permanent stand-alone facility as they are inconsistent with the HBDP as currently proposed. While some of the information used in the original analysis may be relevant to the new 13142.5(b) analysis, the Water Boards will be conducting a new analysis rather than relying on the findings from 2012.

		against seawater intrusion; (5) subsidence of public roads and structures due to drawdown of the groundwater table; and (6) impairment if the aesthetic value of the coastal shore by the obtrusive aboveground intake structures. Under the guidance of the Well Investigation Team, Dr. Detwiler's expert third-party review of modeling methods and results documented in a report titled, "Feasibility Assessment of Shoreline Subsurface Collectors, Huntington Beach Seawater Desalination Project, Huntington Beach, California," by Geosyntec, dated September 2013 and a technical memorandum titled "Revision and Sensitivity Analyses of the Slant Well SSI Model Feasibility Assessment of Shoreline Subsurface Collectors, Huntington Beach Seawater Desalination Project," by Geosyntec, dated November 9, 2015. Dr. Detwiler's conclusions that the groundwater model may under- predict the amount of source water to the SSI system that is derived from inland areas and may over-predict the amount of source water that is derived from the ocean. This is due to seismic survey indications of off-shore aquifer discontinuities, e.g., faulting, and indications of reduced hydraulic conductivity, neither of which were included in the model. Representing these off- shore geologic variables in the model would further reduce the source water available from the ocean and increase the contributions from inland freshwater resources to the yield of the SSI well system -beyond the already unacceptable (to OCWD) proportions presented by Geosyntec. OCWD staff's states that a SSI constructed within the Talbert aquifer near the coast would produce an unacceptable amount of inland groundwater that would reduce the yield of the groundwater basin and, likewise, would effectively reduce the net yield of "new" water produced by an ocean desalination project. For these reasons, OCWD staff would not be in favor of continued consideration of a (Subsurface intakes) SSI option for the Huntington Beach Seawater Desalination Project. The ISTAP evaluated nine types of subsurface intakes for technical feasibility at the Huntington Beach site. These subsurface intake options included: (1) vertical wells completed in the shallow aquifer above the Talbert aquifer, (2) vertical deep wells completed within the Talbert aquifer, (3) vertical wells open to both the shallow and Talbert aquifers, (4) radial collector wells tapping the shallow aquifer, (5) slant wells tapping the Talbert aquifer, (6) seabed infiltration gallery (SIG), (7) beach gallery (surf zone infiltration gallery), (8) horizontal directional drilled wells, and (9) a water tunnel. This evaluation by the ISTAP was based on the hydrogeologic and oceanographic conditions specific to the proposed Huntington Beach AES site and proximate areas. It is the collective opinion of the ISTAP that each seven subsurface intake options for the target hydraulic capacity range (100-127 MGD) had at least one technical fatal flaw that eliminated it from further technical consideration. The shallow vertical wells would create unacceptable water level drawdowns landward of the shoreline and could impact wetlands and cause movement of potential contaminants seaward. The deep vertical wells would have a		

		significant impact on the Talbert aquifer that would interfere with the management of the salinity barrier and the management of the interior freshwater basin. The combined shallow and deep water wells would adversely impact both the shallow aquifer and Talbert aquifer, and in addition, would produce waters with differing inorganic chemistry, which would adversely affect SWRO plant operation. Radial collector wells constructed into the shallow aquifer would have to be located very close to the surf zone which would make it susceptible to damage during storms and would be impacted by the projected sea level rise. Slant wells tapping the Talbert aquifer would interfere with the management of the salinity barrier and the management of the freshwater basin, and further, would likely have geochemical issues with the water produced from the aquifer (e.g., oxidation states of mixing waters). A water tunnel constructed in the unlithified sediment at Huntington Beach would have overwhelming constructability issues. The ISTAP recommends that consideration be given solely to seabed infiltration galleries (SIG) and beach gallery intake systems in the Phase 2 assessment. The ISTAP Phase 2 assessment includes a feasibility assessment of two technically possible subsurface intake alternatives for the HBDP: (1) a seafloor infiltration gallery (SIG); and (2) a beach infiltration gallery (BIG). During the ISTAP Phase 2 process, the BIG was re-assessed. Based on additional information on the beach infiltration gallery design considerations and construction scheduling, the technical feasibility of this subsurface intake option was found by the Phase 2 ISTAP to be infeasible. The high energy nature of the Huntington Beach shoreline and periodic changes in the position of the surf zone due to replenishment render the development of this intake type at this location less feasible than initially considered. Also, the timing of beach retreat during a period of greater rates of sea level rise will exacerbate the design and construction issues. The actual construction could last longer than a single beach re-nourishment cycle. Based on the revised analyses, the Phase 2 ISTAP concludes that the beach galley subsurface option is infeasible to construct to meet the target intake capacity of 106 MGD at the proposed Huntington Beach site. Because of the unstable littoral zone position, it is also unlikely that the smaller intake capacity systems could be successfully constructed and operated for the HBDP at this location. As a result, the Panel eliminated the beach infiltration gallery technology from further study. Therefore the analysis summarized below will be only for the SIG. The Panel considered various definitions of “feasibility” as defined in the Coastal Act, in the California Environmental Quality Act, and in the recent State Water Resource Control Board (SWRCB) amendment to the California Ocean Plan. It was recognized, however, that the details of assessing the economic, environmental and social factors associated with a desalination facility on the California coast must be considered within the context of project and site-specific issues arising from the proposed project. The Panel also considered the definition of economic feasibility regarding subsurface intakes as adopted in the May 6, 2015 amendment to the Ocean Plan, approved by the State Water Resources Control Board that		

states, “Subsurface intakes may be determined to be economically infeasible if the additional costs or lost profitability associated with subsurface intakes, as compared to surface intakes, would render the desalination facility not economically viable.”

Feasibility assessment criteria. For purposes of Chapter III.M., Feasible means capable of being accomplished in a successful manner within a reasonable period of time, taking into account economic, environmental, social, and technological factors.

The SIG alternative has impacts that must be considered in the Regional Water Board’s feasibility determination. These impacts are described below.

Site and Project Description. As shown in Figure 6, the HBDP is located is demarked in red and is adjacent to the HBGS.

Figure 6. HBDP Location Map

The proposed location for the SIG is approximately 3400 feet offshore (ISTAP, 2014), considered to be the optimum location for a SIG based on (Jenkins and Wasyl, 2014 (Appendix M) (see Figure 7).

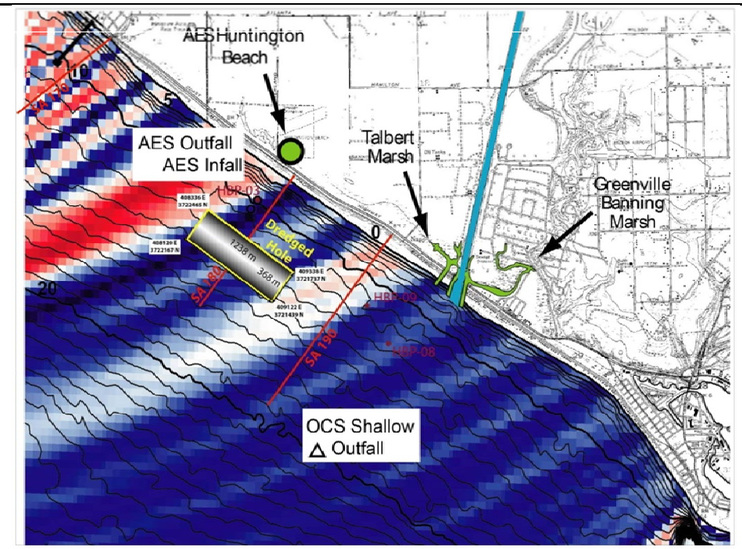

Figure 7. SIG Location Map

At this location, the seafloor is approximately 42 feet below Mean Sea Level (MSL), and the area is subject to almost continuous long-period ocean swells that prevent the efficient use of conventional marine floating equipment. As a result, two construction techniques addressed this specific problem (see details in Appendix G, ISTAP Phase II Report). These are:

- SIG-Trestle: All construction would be performed off of a trestle elevated above the waves (see Figure 8), and
- SIG-Float-In: All major SIG components would be prefabricated off-site and floating equipment would be used to transport and install modular units at the designated SIG location (see Figure 9)

Figure 8. Trestle Construction Methodology.

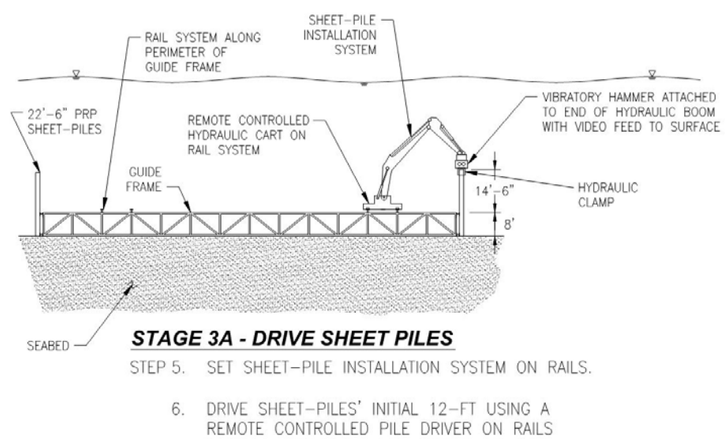

Figure 9. Float-In Construction Methodology.

Seawater would be withdrawn from the seafloor via the SIG and conveyed to an Intermediate Pump Station located under a beach parking lot.

Approximately 106 mgd of seawater collected from the SIG would be pumped from the Intermediate Pump Station to the HBDP Intake Pump station for conveyance to the desalination plant. The layouts for the SIG's trestle and barge alternatives and the Intermediate Pumps Station that are sized for the HBDP of pump station intake needs are shown in Figure 10, Figure 11 and Figure 12.

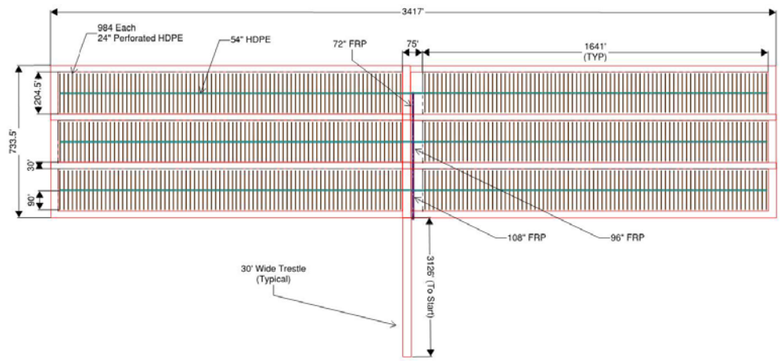

Figure 10. SIG Design for the Trestle Construction Methodology.

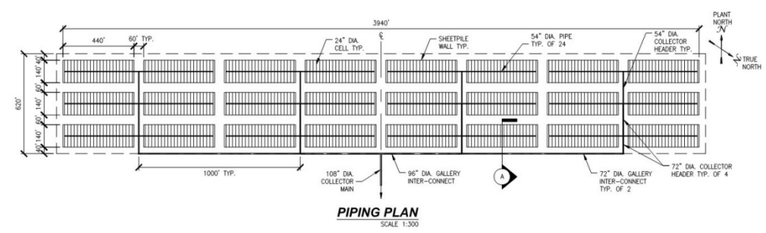

Figure 11. SIG Design for the Barge Construction Methodology.

Figure 12. Intermediate Pump Station.

Environmental and Social factors. Heavy construction in the ocean associated with construction of the infiltration gallery will result in temporary loss of the beach and ocean for recreational, permanent loss of aquaculture use, and conversion of 26 acres of benthic habitat to engineered fill. Similarly, heavy construction would be required along the shoreline for placement of the Intermediate Pump Station and associated piping. The beach area that fronts the proposed site is designated for “Public” or “Semi-Public” use. The Huntington Beach State and City Beaches see more than eight million beach goers annually. Table 5 summarizes the construction and operational requirements of the two SIG options and specific aspects of these options that create environmental impacts.

Table 5. Construction and Operational Requirements of SIG Construction Options

SIG-Trestle	SIG-Float In
CONSTRUCTION REQUIREMENTS -- With Summer Beach Closure (Assumes no construction from Memorial Day to Labor Day in order to reduce impacts	
• 7.0 years of onshore construction in HB on 4 acres of State Beach parking lot for pipe headers and pumps • 1.8 years of onshore and nearshore marine construction to install the 3,000 foot long trestle from shore to offshore gallery • 7.0 years of construction traffic passing through HB and other coastal communities carrying all components needed to construct trestle and install	• 4.5 years of onshore construction in HB on 4 acres of State Beach parking lot for pipe headers and pumps • 2.9 years of marine vessel traffic between Port of LA/LB and SIG site to carry SIG components to site • 2.9 years of offshore construction of the 25.44 acre SIG • 2.9 years of use of construction
CONSTRUCTION REQUIREMENTS -- Without Summer Beach Closure (year-	
• 4.9 years of onshore construction in HB on 4 acres of State Beach parking lot for pipe headers and pumps • 1.0 year of onshore and nearshore marine construction to install the 3,000 foot long trestle from shore to offshore gallery • 4.9 years of construction traffic passing through HB and other coastal communities carrying all components needed to construct trestle and install	• 4.3 years of onshore construction in HB on 4 acres of State Beach parking lot for pipe headers and pumps • 2.5 years of marine vessel traffic between Port of LA/LB and SIG site to carry SIG components to site • 2.5 years of offshore construction of the 25.44 acre SIG • 2.5 years of use of construction
LONG-TERM OPERATIONAL REQUIREMENTS	
• Scraping or light dredging of seabed above SIG (to remove 5 to 10 cm of sediment in order to prevent clogging of natural sediments) would be required every 1 to 3 years to ensure continued	• Scraping or light dredging of seabed above SIG (to remove 5 to 10 cm of sediment in order to prevent clogging of natural sediments) would be required every 1 to 3 years to ensure continued

A range of environmental impacts would be generated, directly or indirectly, as a result of constructing and operating the different SIG construction options. The potential environmental impacts associated with the SIG options are summarized as follows:

Onshore construction in Huntington Beach State Beach parking lot for pipe headers and pumps
(Trestle and Float-in Option)

- Construction noise: The construction of the 4-acre gallery for intake pipes and pumps adjacent to the Pacific Coast Highway and Huntington Beach's recreational areas and/or of the trestle would create disturbing levels of noise.
- Onshore traffic: A large number of vehicles would be required to construct pipe headers and pump gallery, adding to traffic density

		on local and regional roadways. • Air emissions: Construction at the beach lot would result in the emissions from construction vehicles including haul trucks, cranes, drills/bores, pile driving, and worker commuting vehicles, and dust from construction activities and drilling. • Greenhouse gas emissions (GHG): Construction vehicle use of fossil fuels results in emission of carbon dioxide (CO2). Construction emissions of GHG are amortized over the operational life of the project and added to operational emissions. • Degradation of coastal views: The presence of large-scale industrial construction operations on and adjacent to the Huntington Beach recreational area would degrade the existing beach and sunset views. • Recreational disturbance: Recreationists at or adjacent to the beach (beachgoers, trail users, surfers, hotel guests, and oceanfront viewers) would experience a disturbance due to the noise, traffic, dust, and equipment emissions created by construction activities. • Disturbance of sensitive biological resources: Coastal species may be disturbed by onshore or nearshore construction activities. Nearby sensitive species are listed in Appendix F of Appendix G, and include California least tern, snowy plover, California brown pelicans and other wildlife at the Huntington Beach Wetlands. • Potential loss of income to State Beach from loss of parking revenue and to beachfront businesses (retail, hotels, support facilities) if beach visitors opt to go to other beaches during construction. Onshore and nearshore construction to install the trestle (Trestle only) • Air emissions and GHG: Construction of the trestle would result in air emissions (including CO2) from construction vehicles, dredges, barges, haul trucks, cranes, drills/bores, pile drivers, and worker commuting vehicles. Impacts would be similar to those associated with demolition of the Huntington Beach Generating Station, just east of Highway 1. • Degradation of coastal views: The multi-year presence of large-scale industrial construction operations on and adjacent to the Huntington Beach recreational area would degrade the existing beach and sunset views. • Onshore traffic: A large number of vehicles would be required to construct the trestle, adding to traffic density on local and regional roadways. Offshore construction of the SIG (Trestle and Float-in Option) • Air emissions and GHG: Construction of a seafloor infiltration gallery would result in the emissions (including CO2) from construction vehicles, dredges, barges, haul trucks, cranes, drills/bores, pile driving, and worker commuting vehicles, and dust from onshore construction and drilling.		

		• Commercial/recreational fishing: The construction of a SIG could prevent fishing access to the construction and operational zones. • Risk of offshore contamination from construction accidents: Accidental spills of marine fuels or other contaminants could contaminate the ocean, affecting marine life or recreation. • Short-term impact to benthic habitat (marine ecology): Seafloor disturbance during SIG construction would result in loss of benthic habitat over a 26-acre area, with potential loss of marine life including infaunal invertebrates, epifaunal invertebrates, demersal invertebrates, and demersal fishes. Use of construction yard at Port of Los Angeles/Long Beach (Float-in only) • Land use disruption: Conflicts may arise from displacement of existing coastal operations in the Port areas during float-in construction activities. • Onshore traffic: A large number of vehicles would be required to support SIG construction at the Port, adding to traffic density on local and regional roadways. Disposal of dredged marine sediments at approved offshore site (Trestle and Float-in Option) • Marine biology: Disposal of sediments may affect marine resources in the disposal zone. Operation and maintenance of SIG (Trestle and Float-in Option) • Marine ecology (long-term): Long-term impingement and entrainment impacts associated with the SIG are expected to be minor due to the filtering of seawater through marine sediments. • Marine ecology: Periodic maintenance (scraping of seabed surface at 1 to 3 year intervals) may be required to ensure adequate continuous intake; this seafloor disturbance may result in longer-term or periodic disturbance to benthic habitat over 20 to 23 acre area. • Seafloor obstructions: The presence of 11,655 to 12,495 linear feet of intake and gathering pipes on the seafloor has the potential to catch anchors of marine vessels. In summary, the construction and operation of both SIG alternatives have environmental effects on the marine ecology that must be considered by the Regional Water Board in assessing the feasibility of subsurface intakes. In addition, the construction and operation of either SIG alternative would have social impacts on local businesses and the general public that must be considered by the Regional Water Board in assessing the feasibility of subsurface intakes. The expected construction impacts would last from 4.5 to 7 years, and every 1 to 3 years for maintenance affecting beach and ocean recreation, beach tourism and the local businesses **Economic Factors.** The ISTAP evaluated the cost of implementing a SIG		

intake analysis and is described in Appendix G, the ISTAP Phase II Report. The ISTAP made the following findings:

Finding 1: The capital costs in 2015 dollars for the Ocean Open Intake range from a low of $852 million to a high of $899 million. O&M costs for this option range from $49 to $54 million per year (Table 6).

Finding 2: The capital costs in 2015 dollars for the SIG range from a low of $1,936 million to a high of $2,347 million. O&M costs are the same for each SIG option and range from $42 to $58 million per year (Table 6).

Table 6. Comparison of Capital and Annual O&M Costs (In 2015 $ millions)

	Ocean Open	SIG - Trestle	SIG - Float-in
Estimation	**Capital**		
ISTAP High	852	2,347	2,115
ISTAP Low	899	1,936	2,109
	O&M		
ISTAP High	54	58	58
ISTAP Low	49	42	42

Finding 3: Based on a life-cycle analysis, the unit costs for produced water for the 50 MGD product capacity option ranges from a minimum of $1,517 to a maximum of $4,995/AF in 2015 dollars. The variation in unit costs is predominantly dependent on the intake technology, rather than the discount rate (3% or 7%) or the project duration (30 or 50 years).

Table 7 provides a summary of unit costs for produced water from a 50 MGD product capacity desalination plant at the Huntington Beach site. The minimum and maximum unit costs represent the results of assessing the impact of two discount rates and two project durations on various cost factors. The average unit cost for the Ocean Open Intake is estimated to be $1914/AF, compared to average cost for the two SIG options of approximately $3,461/AF. The selection of a SIG intake technology, regardless of the construction method, increases the estimated unit cost for the 50 MGD product capacity by nearly 80%.

Table 7. Unit Cost Summary ($/acre foot)

(All factors			
Range	**Ocean Open**	**SIG - Trestle**	**SIG - Float-in**
Minimum	1,517	2,121	2,279
Maximum	2,259	4,995	4,601
Average	1,914	3,452	3,471
Percent Increase	NA	80	81

Note: Product Capacity of 50 MGD, 3% and 7% Discount Rates, 30 and 50 year project duration

Finding 4: Reducing the product scale of the desalination facility decreases capital and O&M costs, but the unit cost increases as the scale (or product capacity) decreases from 50 MGD to 12.5 MGD. Alternatively, increasing the product capacity to 100 MGD results in a net decrease in unit cost.

Table 8 presents the impact of varying the scale of the plant product capacity on the life cycle unit cost ($/AF, produced water) for the three alternatives. As anticipated, consistent with the literature on desalination costs, unit costs decrease as the plant product capacity increases, with a 14 to 20% reduction in unit costs between the 12.5 MGD product capacity and the 100 MGD product capacity. The construction costs of the SIG are reduced to some degree but not as a linear scale due to high mobilization costs regardless of scale. The scale effect on the unit cost as the product capacity is reduced has less of an impact on the overall unit cost than the choice of intake technology.

Table 8. Scale Impacts on Unit Costs ($/acre foot)

Scale (MGD	Ocean Open	SIG - Trestle	SIG - Float-in
12.5	1,694	2,497	2,646
25	1,650	2,282	2,410
50	1,517	2,121	2,279
100	1,466	2,011	2,156

Note: 50 year life at a 3% Discount Rate

Finding 5: Unit costs decrease with increasing project duration (project life) and increase with higher discount rates. The impacts of project duration and discount rates are summarized in Table 9. For all three alternatives, extending the project duration from 30 to 50 years decreases the unit costs for produced water. A higher discount rate increases unit costs due to the increased cost of project financing, a factor that usually represents more than 35 percent (%) of total capital costs for large scale (>25 MGD product capacity projects). (NRC, Report on Desalination, 2008)

Table 9. Project Duration and Discount Rate Impacts on Unit Costs ($/acre foot)

Assumptio	Capital		
	Ocean Open Intake	**SIG - Trestle**	**SIG - Float-in**
30 yrs	1,716	2,553	2,762
50 yrs @	1,517	2,121	2,279
30 yrs @	2,254	3,847	4,314
50 yrs @	2,115	3,533	3,953

Chapter III.M provides the following guidance for assessing the feasibility of subsurface intakes:

		Subsurface intakes shall not be determined to be economically infeasible solely because subsurface intakes may be more expensive than surface intakes. Subsurface intakes may be determined to be economically infeasible if the additional costs or lost profitability associated with subsurface intakes, as compared to surface intakes, would render the desalination facility not economically viable. Thus, the Regional Water Board's determination of the economic feasibility of the SIG alternatives turns on the basis of whether the additional costs or lost profitability associated with these alternatives would render the desalination facility not economically viable. Based on the Desalination Amendment's definition of feasibility, the ISTAP concluded that the well technologies and a beach infiltration gallery are technically infeasible and that a SIG would have "severe" short-term environmental impacts as well as long-term environmental impacts including the loss of benthic habitat and entrainment, and the SIG is not economically viable at the Huntington Beach location within a reasonable timeframe. August 25, 2015 ISTAP Phase 2 report comment letter from the Huntington Beach City Attorney's office supports the ISTAP's feasibility conclusions. It states, in relevant part, that *"The certified SEIR concluded that a SIG was both infeasible and an environmentally inferior option to open ocean intake design. It does not appear from the draft report's findings that circumstances have changed."* The 2012 Regional Water Board 13142.5(b) compliance determination for the co-located and temporary stand-alone HBDP operations (Order R8-2012-0007 (Appendix C)) includes the following finding regarding the feasibility of alternative subsurface intakes: *The alternative subsurface intake systems were determined not to be the environmentally preferred alternatives. Taking into account economic, environmental and technological factors, the Regional Water Board finds that the alternative subsurface intakes are not feasible.* Poseidon believes the 2010 SEIR, 2012 Regional water Board 13142.5(b) compliance determination, 2015 and 2015 ISTAP Phase 1 and 2 reports, and the 2016 Well Investigation Team (WIT) reports individually and collectively reach the incontrovertible conclusion that subsurface intakes are technically infeasible and/or not environmentally superior to the proposed HBDP.		
i. The regional water board shall consider the following factors in determining feasibility of subsurface intakes: geotechnical data, hydrogeology, benthic topography, oceanographic conditions, presence of sensitive habitats, presence of	Yes	A detailed analysis of the life-cycle cost for the HBDP subsurface intake/discharge alternatives is presented in the ISTAP Phase 2 Report (Appendix G) (See RCF 33a). The life cycle costs provide a relative comparison of the incremental cost and savings of each of the alternatives. Costs considered include permitting, design, land acquisition, financing, construction, operations, maintenance, mitigation, equipment replacement, insurance, taxes, management, and energy consumption over the lifetime of the facility.	RCF 33b	While cost is a factor in determining feasibility of subsurface intakes, it is not the only factor. The Ocean Plan requires consideration of the project life cycle cost and economic viability. In RCFs above, Water Boards staffs have indicated where more information is needed to assess whether it is technically feasible to use subsurface intakes to withdraw all or a portion of the source water. Subsurface intakes are technically feasible at at least one site and may be technically feasible at alternative sites.

sensitive species, energy use for the entire facility; design constraints (engineering, constructability), and project life cycle cost. Project life cycle cost shall be determined by evaluating the total cost of planning, design, land acquisition, construction, operations, maintenance, mitigation, equipment replacement and disposal over the lifetime of the facility, in addition to the cost of decommissioning the facility. Subsurface intakes shall not be determined to be economically infeasible solely because subsurface intakes may be more expensive than surface intakes. Subsurface intakes may be determined to be economically infeasible if the additional costs or lost profitability associated with subsurface intakes, as compared to surface intakes, would render the desalination facility not economically viable. In addition, the regional water board may evaluate other site- and facility-specific factors.

Given the conclusion of the ISTAP report that subsurface intakes are technically infeasible for the proposed HBDP, Poseidon proposes to retrofit the existing HBGS intake and discharge structures to address the seawater intake and discharge requirements for the HBDP. The Annual Life-Cycle Cost for the retrofit are presented in Table 10.

TABLE 10
Annual Life-Cycle Cost
($/Year)

Annual Cost	Offshore Screen	Onshore Screens	Multiport Diffuser
Capital Charge	$ 1,498,843	$ 1,098,349	$ 2,996,302
O&M Charge	$ 413,208	$ 549,708	$ 356,792
Other Charges	$ 74,877	$ 76,248	$ 77,786
Total Annual Cost	$ 1,986,928	$ 1,724,305	$ 3,430,880

Chapter III.M provides the following guidance for assessing the feasibility of subsurface intakes:

> *Subsurface intakes shall not be determined to be economically infeasible solely because subsurface intakes may be more expensive than surface intakes. Subsurface intakes may be determined to be economically infeasible if the additional costs or lost profitability associated with subsurface intakes, as compared to surface intakes, would render the desalination facility not economically viable.*

Thus, the Regional Water Board's determination of the economic feasibility of the SIG alternatives turns on the basis of whether the additional costs or lost profitability associated with these alternatives would render the desalination facility not economically viable. One measure of economic viability is whether the anticipated plant revenues would cover cost of one or both of the SIG alternatives.

Under the terms of the OCWD WPA term sheet, all of the output of the HBDP is to be made available to the OCWD at a predetermined price. Thus, one consideration for determining the feasibility of the SIG alternatives is whether the amount the OCWD is obligated to pay for the water would be adequate to cover additional cost of the SIG alternatives for the duration of the 50-year operating life of the project when the SIG is put into operation.

See RCFs 19, 21, 22, 23, and 25 above for a review of the geotechnical data, hydrogeology, benthic topography, oceanographic conditions, presence of sensitive habitats, presence of sensitive species, design constraints (engineering, constructability) associated with the SIG alternatives.

For sites where subsurface intakes are technically feasible but Poseidon asserts that they are economically infeasible, it is unclear if the economic analysis is consistent with the Ocean Plan. Poseidon has submitted the ISTAP Final Phase 2 Report, which includes some comparative economic analyses for surface and subsurface intakes. The ISTAP Phase 2 concluded its report prior to the adoption of the Desalination Amendment. The report was not written in a format that corresponds clearly to the requirements for the evaluation of project life cycle cost in the Ocean Plan. Additionally, Poseidon includes other factors that should be considered in the life cycle cost analysis, but it is unclear if there is a comparative analysis for surface and subsurface intakes in the information provided.

Please provide the following information:

- **For each alternative site, if Poseidon asserts that subsurface intakes are not economically feasible, Poseidon shall provide information regarding the project life cycle cost for that specific alternative site. The assessment must compare project life cycle cost for surface, subsurface, and a combination of surface and subsurface intake technologies.**
- **A clear summary document that lists the project life cycle cost factors in the Ocean Plan and a comparison of the surface and subsurface alternatives at Property 1G. The document should identify where (i.e. page number and paragraphs) the factor is evaluated in the ISTAP Final Phase 2 report or any other information submitted by Poseidon. The analysis must include costs associated with treatment of HBDP water for distribution to OCWD. To the extent that the specific project life cycle factors have not been adequately evaluated, Poseidon must submit evaluations for each of the factors. If there are other factors that Poseidon would like to include in the project life cycle analysis, please provide a discussion of why each factor should be considered in the analysis. In the project life cycle summary document, the factors must be analyzed first including only factors that are listed in the Ocean Plan, and then include any additional factors identified by Poseidon in a subsequent analysis.**
- **An assessment of economic viability that considers the price breakpoint at which OCWD would be unwilling to pay for HBDP water.**
- **A comparison of the unit cost of HBDP water to the cost for other sources water both short-term and long-term.**

				• **Any differential in energy use for subsurface intakes at the alternative sites.**
ii. If the regional water board determines that subsurface intakes are not feasible for the proposed intake design capacity, it shall determine whether subsurface intakes are feasible for a reasonable range of alternative intake design capacities. The regional water board may find that a combination of subsurface and surface intakes is the best feasible alternative to minimize intake and mortality of marine life and meet the identified need for desalinated water as described in chapter III.M.2.b.(2).		The life-cycle analysis presented in RCF 33b supports the conclusion that subsurface intakes are not feasible for a reasonable range of intake alternatives.	RCF 33c	Water Boards staff does not agree that Poseidon has provided sufficient information to support the conclusion that subsurface intakes are not feasible for a reasonable range of intake alternatives. See Water Boards staffs' comments and information requests in RCF 18, 19, 23, 33a, and 33b. For each alternative site, RCF 23 requires Poseidon to evaluate the maximum amount of seawater that could be withdrawn through subsurface intake technologies as well as the technical feasibility of using a combination of surface and subsurface intakes. This information will inform the analysis for evaluating the economic feasibility of using a combination of surface water and subsurface intakes. **<u>Please submit the following information:</u>** • **Based on the information and analyses requested in RCF 23 (listed in this RCF above), for each alternative site, an evaluation of economic feasibility for a combination of subsurface intakes and surface intakes using project life cycle costs.**
b. Installation and maintenance of a subsurface intake shall avoid, to the maximum extent feasible, the disturbance of sensitive habitats and sensitive species.	Yes	See RCF 21 for a description of habitat disturbance associated with the SIG alternatives.	RCF 34	Please see Water Boards staffs' comments and information requests in RCF 21, 22, and 99.
c. If subsurface intakes are not feasible, the regional water board may approve a surface water intake subject to the following conditions:	Yes	An analysis of relevant geotechnical data, hydrogeology, benthic topography, oceanographic conditions, presence of sensitive habitats, and presence of sensitive species, energy use for the entire facility, design constraints, and project life cycle costs demonstrates that various subsurface intake alternatives are not feasible for the HBDP. Poseidon proposes to retrofit the existing HBGS intake and discharge to address the seawater intake and brine discharge requirements for the HBDP. Poseidon has analyzed potential intake designs to minimize the intake and mortality of all forms of marine life. The description of the surface intake alternatives is summarized in RCF 28, as well as in RCF 21 through RCF 25.	RCF 35	Poseidon has submitted information that asserts that subsurface intakes are not feasible for the proposed site and alternative sites. However, the Water Boards do not have sufficient information to support that conclusion. Other RCFs, such as RCF 23, include the requisite information requests; the requests are not repeated here.
i. The regional water board shall require that surface water intakes be screened. Screens must be functional while the facility is withdrawing seawater.	Yes	The HBDP will be equipped with functioning 1mm wedgewire screens while withdrawing seawater. The screen design is described in RCF 28 and Appendices H and JJ.	RCF 36	This section of the Ocean Plan is to ensure that screens are being used on surface water intakes, but also that they are functioning as designed to minimize intake and mortality of all forms of marine life. RCF 28 briefly mentions the screens will be manually maintained by divers. However, there is not sufficient detail to determine how the screens will be maintained. Also please see Water Boards staffs' comments in RCF 27.

				<u>Please submit the following information:</u> • **A plan for how the screen functionality will be maintained and the associated quality assurance procedures for ensuring the screen is functioning as designed while the HBDP is operating. For example, will divers be sent down monthly/daily to clear the screen of debris? If they are being sent down "as needed," how will Poseidon determine when the screens need to be cleaned or replaced? The maintenance plan must also include a discussion of maintenance procedures and the associated quality assurance procedures as they relate to maintaining a through-screen velocity that does not exceed 0.15 meters per second.**
ii. In order to reduce entrainment, all surface water intakes must be screened with a 1.0 mm (0.04 in) or smaller slot size screen when the desalination facility is withdrawing seawater.	Yes	**1 mm Wedgewire Offshore Surface Intake Alternative.** The screening structure devoted to the process water flow would be screened by four (three plus one redundant) Bilfinger Water Technologies (BWT) center-flow traveling water screens (or equal) with 1.0-mm mesh. Narrow-slot cylindrical wedgewire screens have been proven for reducing impacts to marine organisms at water intakes. They are designed to reduce entrainment by physically excluding organisms from the withdrawn flow. Wedgewire screens are also designed to reduce impingement of organisms by providing a low through-slot velocity (0.5 ft/sec or less). At this low velocity, impingement is widely considered to be a non-issue and meets the requirements of the OPA for minimizing impingement. Biological effectiveness is enhanced with the presence of ambient currents (e.g., ocean, tidal) which can transport debris and non-motile early life stages with weak swimming abilities past or away from the intake. An offshore intake withdrawal point also has potential to reduce entrainment impacts due to its location in less productive water Cylindrical wedgewire screens utilize wire that is V- or wedge-shaped in cross-section. The wire is welded to a framing system to form a slotted screening element (Figure 13).	RCF 37	The screen must be located at the onset of the intake rather than shoreward of a velocity cap or other initial screening technology.

		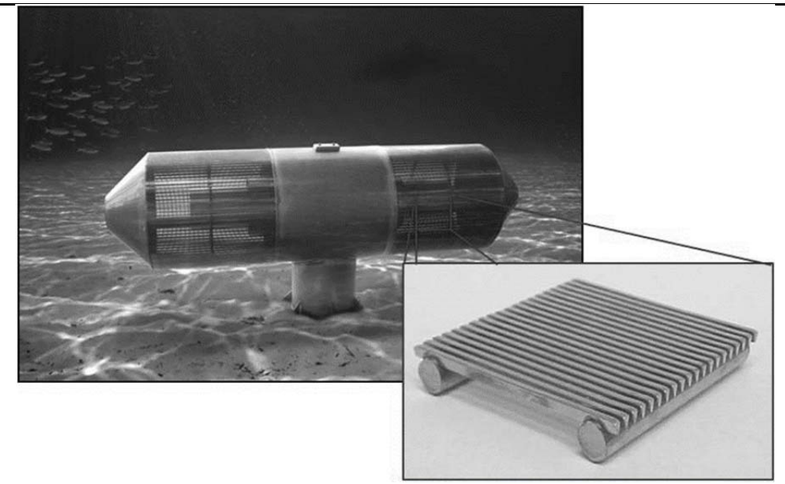 **Figure 13. Cylindrical wedgewire screen, showing detail of v-shaped wedgewire (Image courtesy of Johnson Screens)** These screens have been biologically effective in preventing entrainment and impingement of fish and have not caused unusual maintenance problems in freshwater applications. **Multiport Diffuser.** The multiport diffuser technology is included in RCF 31.		
iii. An owner or operator may use an alternative method of preventing entrainment so long as the alternative method results in intake and mortality of eggs, larvae, and juvenile organisms that is less than or equivalent to a 1.0 mm (0.04 in) slot size screen. The owner or operator must demonstrate the effectiveness of the alternative method to the regional water board. The owner or operator must conduct a study to demonstrate the effectiveness of the alternative method, and use an Empirical Transport Model (ETM)/ Area of Production Forgone (APF) approach to estimate entrainment. The study period shall be at least 12 consecutive months. Sampling for environmental studies shall be designed to account for	No		RCF 38	This section is not applicable to the HBDP as Poseidon is proposing to use a surface water intake equipped with a 1.0 mm wedgewire screen.

variation in oceanographic or hydrologic conditions and larval abundance and diversity such that abundance estimates are reasonably accurate. Samples must be collected using a mesh size no larger than 335 microns and individuals collected shall be identified to the lowest taxonomical level practicable. The ETM/APF analysis shall evaluate entrainment for a broad range of species, species morphologies, and sizes under the environmental and operational conditions that are representative of the entrained species and the conditions at the full-scale desalination facility. At their discretion, the regional water boards may permit the use of existing entrainment data to meet this requirement.				
iv. In order to minimize impingement, through-screen velocity at the surface water intake shall not exceed 0.15 meters per second (0.5 feet per second).	Yes	The process water intake is designed for a through-screen velocity of less than 0.5 ft/sec.	RCF 39	RCF 36 includes information requests to ensure the wedgewire screens are functioning as intended, including operating with a through-screen velocity that shall not exceed 0.15 meters per second.
(2) Considerations for Brine Discharge Technology:			RCF 40	
(a) The preferred technology for minimizing intake and mortality of all forms of marine life resulting from brine discharge disposal is to commingle brine with wastewater (e.g., agricultural, municipal, industrial, power plant cooling water, etc.) that would otherwise be discharged to the ocean. The wastewater must provide adequate dilution to ensure salinity of the commingled discharge meets the receiving water limitation for salinity in chapter III.M.3. Nothing in this section shall preclude future recycling of the wastewater.	Yes	See response RCF 24 above.	RCF 41	See Water Boards staffs' comments and information requests in RCF 24.
(b) Multiport diffusers are the next best	Yes	As noted in Section RCF 28 through RCF 31, Poseidon evaluated a new	RCF 42	Please see Water Boards staffs' comments and information

	method for disposing of brine when the brine cannot be diluted by wastewater and when there are no live organisms in the discharge. Multiport diffusers shall be engineered to maximize dilution, minimize the size of the brine mixing zone, minimize the suspension of benthic sediments, and minimize mortality of all forms of marine life.		multiport diffuser system would be located on the existing HBGS discharge outfall tower. The diffuser system evaluated was engineered to maximize dilution, minimize the size of the brine mixing zone, minimize the suspension of benthic sediments, and minimize marine life mortality in accordance with the provisions of the Ocean Plan.		requests in RCF 30, 31, and 52-55.
(c)	Brine discharge disposal technologies other than wastewater dilution and multiport diffusers, such as flow augmentation, may be used if an owner or operator can demonstrate to the regional water board that the technology provides a comparable level of intake and mortality of all forms of marine life as wastewater dilution if wastewater is available, or multiport diffusers if wastewater is unavailable. The owner or operator must evaluate all of the individual and cumulative effects of the proposed alternative discharge method on the intake and mortality of all forms of marine life, including (where applicable); intake-related entrainment, osmotic stress, turbulence that occurs during water conveyance and mixing, and shearing stress at the point of discharge. When determining the intake and mortality associated with a brine discharge disposal technology or combination of technologies, the regional water board shall require the owner or operator to use empirical studies or modeling to:	No		RCF 43	This section is not applicable to the HBDP as Poseidon is proposing to use multiport diffusers.
	i. Estimate intake entrainment impacts using an ETM/APF approach.	No		RCF 44	This section is not applicable to the HBDP as Poseidon is proposing to use multiport diffusers.
	ii. Estimate degradation of all forms of marine life from elevated salinity within the brine mixing zone, including osmotic stresses, the size of impacted area, and the duration that all forms of marine life are exposed to the toxic conditions. Considerations shall be given to the most sensitive species, and	No		RCF 45	This section is not applicable to the HBDP as Poseidon is proposing to use multiport diffusers.

	community structure and function.				
iii.	Estimate the intake and mortality of all forms of marine life that occurs as a result of water conveyance, in-plant turbulence or mixing, and waste discharge.	No		RCF 46	This section is not applicable to the HBDP as Poseidon is proposing to use multiport diffusers.
iv.	Within 18 months of beginning operation, submit to the regional water board an empirical study that evaluates intake and mortality of all forms of marine life associated with flow augmentation the alternative brine discharge technology. The study must evaluate impacts caused by any augmented intake volume, intake and pump technology, water conveyance, waste brine mixing, and effluent discharge. Unless demonstrated otherwise, organisms entrained by flow augmentation the alternative brine discharge technology are assumed to have a mortality rate of 100 percent. The study period shall be at least 12 consecutive months. If the regional water board requires a study period longer than 12 months, the final report must be submitted to the regional water board within 6 months of the completion of the empirical study.	No		RCF 47	This section is not applicable to the HBDP as Poseidon is proposing to use multiport diffusers.
v.	If the empirical study shows that flow augmentation the alternative brine discharge disposal technology results in more intake and mortality of all forms of marine life than a facility using wastewater dilution or multiport diffusers, then the facility must either (1) cease using flow augmentation the alternative brine discharge technology and install and use wastewater dilution or multiport diffusers to discharge brine waste, or (2) re-design the flow	No		RCF 48	This section is not applicable to the HBDP as Poseidon is proposing to use multiport diffusers.

augmentation the alternative brine discharge technology system to minimize intake and mortality of all forms of marine life to a level that is comparable with wastewater dilution if wastewater is available, or multiport diffusers if wastewater is unavailable, subject to regional water board approval.				
d. Flow augmentation as an alternative brine discharge technology is prohibited with the following exceptions:			RCF 49	Note that the proposed HBDP does not qualify for the exceptions. Therefore flow augmentation cannot be authorized under any operating scenario (i.e., co-located, temporary stand-alone, or permanent stand-alone).
i. At facilities that use subsurface intakes to supply augmented flow water for dilution. Facilities that use subsurface intakes to supply augmented flow water for dilution are exempt from the requirements of chapter III.M.2.d.(2)(c) if the facility meets the receiving water limitation for salinity in chapter III.M.3.	No		RCF 50	This section is not applicable to the HBDP as the facility is prohibited from using flow augmentation.
ii. At a facility that has received a conditional Water Code section 13142.5(b) determination and is over 80 percent constructed by [the effective date of this plan]. If the An owner or operator of the facility proposes proposing to use flow augmentation as an alternative brine discharge technology, the facility must: Use low turbulence intakes (e.g., screw centrifugal pumps or axial flow pumps) and conveyance pipes.; convey and mix dilution water in a manner that limits thermal stress, osmotic stress, turbulent shear stress, and other factors that could cause intake and mortality of all forms of marine life; Facilities proposing to using flow augmentation must comply with chapter III.M.2.d.(1); facilities proposing to using flow augmentation through surface intakes are prohibited from and	No		RCF 51	This section is not applicable to the HBDP as the facility is prohibited from using flow augmentation.

not discharging through multiport diffusers.				
e. Mitigation				
Mitigation for the purposes of this section is the replacement of all forms of marine life or habitat that is lost due to the construction and operation of a desalination facility after minimizing intake and mortality of all forms of marine life through best available site, design, and technology. The regional water board shall ensure an owner or operator fully mitigates for the operational lifetime of the facility and uses the best available mitigation measures feasible to minimize intake and mortality of all forms of marine life. The owner or operator may choose whether to satisfy a facility's mitigation measures pursuant to chapter III.M.2.e.(3), or if available, M.2.e.(4), or a combination of the two.	Yes	During co-located operation the Project will obtain its source water from the wastewater effluent stream of the HBGS. HBGS's current NPDES permit allows for a maximum intake of 387 MGD, which is over three times more than the daily average maximum need of the Project (i.e., 106.7 MGD), and the HBGS maintains a minimum flow of at least one seawater circulating pump (approximately 64 MGD) for system maintenance. The regulatory assumption under the SWRCB Once Through Cooling (OTC) Policy is 100 percent mortality of any marine life entrained by the power plant's seawater intake, and AES (HBGS owner) has already mitigated for entrainment from its operations under the requirements of the OTC Policy, therefore no additional mitigation is required. The Project's proposed Marine Life Mitigation Plan (MLMP) would account for the full 106.7 MGD annual average intake despite the fact that at least 64 MGD of the Project's source water will be wastewater from the HBGS. Therefore, the Project's marine life effects will be fully mitigated and until the Project is in a permanent stand-alone operating scenario, the use of the HBGS wastewater stream for a majority of the source water is consistent with the marine life minimization provisions of the Desalination Amendment. A MLMP is being prepared in coordination with the California State Lands Commission involving the Bolsa Chica wetlands. The MLMP will be developed pursuant to Desalination Amendment guidance, and includes a calculation of the Area of Production Foregone due to the operational effects (i.e., intake and discharge) of the Project.	RCF 52	Poseidon is responsible for mitigation during co-located, temporary stand-alone, and permanent stand-alone operations of the HBDP. During co-located and temporary stand-alone operations, Poseidon is responsible for mitigating for incremental mortality resulting from HBDP's operations. Seawater desalination facilities that use the Ocean Plan's preferred brine discharge technology of commingling with wastewater are still responsible for assessing mitigation for discharge-related mortality. Please see Water Boards staffs' comments and information requests in RCF 55. Mitigation requirements depend on the site, design, and technology of the final approved desalination facility, and the Regional Water Board has yet to determine whether the proposed project constitutes the best available site, design, and technology. Therefore, it is premature to determine the final information needs for mitigation. When making the 13142.5(b) determination, the Regional Water Board will determine the appropriate mitigation requirements to compensate for the intake and mortality of all forms of marine life associated with the construction and operation of HBDP. The comments provided here respond to Poseidon's proposed mitigation for the proposed site, design, and technology. Per the Interagency Permitting Sequencing Framework Agreement signed on October 3, 2016, Regional Board staff will consult with Coastal Commission staff on the MLMPs for the proposed HBDP to ensure both agencies' staffs recommend approval of the same mitigation permit conditions. Consulting with Coastal Commission staff may result in the identification of additional and/or alternative mitigation to satisfy the Ocean Plan's requirement for the best mitigation measures feasible for minimizing the intake and mortality of all forms of marine life. The additional and/or alternative mitigation would have to be consistent with the mitigation requirements in the Ocean Plan.
(1) Marine Life Mortality Report. The owner or operator of a facility shall submit a report to the regional water board estimating the marine life mortality resulting from construction and operation of the facility after implementation of the facility's required site, design, and technology measures.	Yes	The analysis of the direct and indirect effects on all forms of marine life resulting from the construction and operation of the proposed HBDP can be found in Appendix H, HBDP Intake/Discharge Feasibility Analysis, Alden, March 2016; Appendix V, Intake APF Calculations, Tenera 2015; Appendix T, Diffuser APF Calculations, MBC 2015 and Appendices R and S, 35.5 ppt Salinity Zone Acreage Calculations based on the guidance found in the Desalination Amendment. The direct and indirect effects on all forms of marine life resulting from the construction and operation of alternatives under consideration for the HBDP are summarized in Table 1. See RCF 22.	RCF 53	Poseidon submitted several documents that contain information related to the Marine Life Mortality Report: 2016 Ocean Plan Amendment Compliance Matrix (Appendix A), Intake Discharge Feasibility Report (Appendix H), Technical Memo on Comparison of Ichthyoplankton Data Collected at the HBGS Intake for Two 12-month Periods: July 2014-June 2015 and September 2004-August 2004 (Appendix Q), Low-flow Dilution Analysis Alden 6-jet Radial Diffuser Retrofit at Huntington Beach Desalination Facility (Appendix R), Conventional Diffuser Retrofit at Huntington Beach Desalination Facility (Appendix S), Technical Memorandum on Diffuser Discharge Analysis (Appendix T), and Memorandum on Approach for APF calculations at Huntington Beach

				(Appendix V). All of these documents focus on the proposed site at Property 1G.
(a) For operational mortality related to intakes, the report shall include a detailed entrainment study. The entrainment study period shall be at least 12 consecutive months and sampling shall be designed to account for variation in oceanographic or hydrologic conditions and larval abundance and diversity such that abundance estimates are reasonably accurate. At their discretion, the regional water boards may permit the use of existing entrainment data from the facility to meet this requirement. Samples must be collected using a mesh size no larger than 335 microns and individuals collected shall be identified to the lowest taxonomical level practicable. The ETM/APF analysis shall be representative of the entrained species collected using the 335 micron net. The APF shall be calculated using a one-sided, upper 95 percent confidence bound for the 95th percentile of the APF distribution. An owner or operator with subsurface intakes is not required to do an ETM/APF analysis for their intakes and is not required to mitigate for intake-related operational mortality. The regional water board may apply a one percent reduction to the APF acreage calculated in the Marine Life Mortality Report to account for the reduction in entrainment of all forms of marine life when using a 1.0 mm slot size screen.	Yes	The HBDP Entrainment study included in Appendices D and Q addresses the requirement set forth in Section III.M.2.(e)(1)(a). The HBDP Entrainment Study, and others produced in support of Poseidon's HBDP permitting applications, was reviewed by the City of Huntington Beach, and the Regional Water Board in support of its the 2010 Water Code 13142.5 determination for the HBDP. The HBDP Entrainment Study and findings followed the same format as the Carlsbad Desalination Project, which was reviewed by Dr. Peter Raimondi, an independent scientist with the extensive experience evaluating entrainment studies on behalf of California State Agencies, including the Commission. The Commission retained Dr. Raimondi to advise the Commission on the development of the HBDP Marine Life Mitigation Plan. Dr. Raimondi reported his findings that the EPS Entrainment Study in April 2008. He reported that the EPS Entrainment Study, and Poseidon's use of the entrainment data for the CDP was consistent with the best available science. Dr. Raimondi concluded that the study provided adequate data to determine the types and numbers of organisms that would be subject to entrainment.	RCF 54	Poseidon submitted the following documents regarding intake-related operational mortality: 2010 Final Draft Subsequent Environmental Impact Report for HBDP (Appendix D), Technical Memo on Comparison of Ichthyoplankton Data Collected at the HBGS Intake for Two 12-month Periods: July 2014-June 2015 and September 2004-August 2004 (Appendix Q), and Memorandum on Approach for APF calculations at Huntington Beach (Appendix V). The 2010 Intake Effects Assessment (Appendix M in the 2010 Final Draft Subsequent Environmental Impact Report for HBDP) constitutes the entrainment study for HBDP and is based on a 2003-2004 entrainment study for HBGS. Appendix V provides APF calculations based on the data from that 2003-2004 entrainment study. Appendix Q compares ichthyoplankton communities that were characterized during the 2003-2004 entrainment study and a 2014-2015 study. The technical memo states that the purpose of the 2014-2015 study was to determine if data from the 2003-2004 study was representative of the current ichthyoplankton community. Water Boards staffs have the following information needs related to Appendices Q and V. **<u>Please provide the following information</u>:** • **Appendix Q concludes that taxonomic composition was similar for the two studies. Explain why the 2003-04 data, rather than the 2014-2015 data, were used to calculate the APF for intake-related mortality in Appendix V. Since the APF calculation is based on the most abundant taxa collected, it seems that, if there is notable change in abundance of fish larvae over the years (assuming the studies are comparable despite differences in sampling methodology), then the most recent data and taxonomic composition should be used in the APF calculation, to reflect that change.** • **An explanation of how species were selected from the 2003-2004 entrainment study for calculating APF estimates in Appendix V. Also explain any manipulations of the 2003-2004 entrainment data that were performed to obtain APF estimates that account for current conditions of the proposed HBDP.**
(b) For operational mortality related to discharges, the report shall estimate the area in which salinity exceeds 2.0 parts per thousand above natural background salinity or a facility-specific alternative receiving water	Yes	The area in which the brine discharge from the discharge diffuser operations, 1) co-located, temporary and long term stand-alone HBDP operations exceeds 2.0 ppt above the natural background salinity is a 7.4 acre circle extending 98 meters (321 ft.) and 2) long term stand-alone only HBDP operations exceeds 2.0 ppt above the natural background salinity is a 0.34 acre circle extending 21 meters (69 ft) from the end of the discharge	RCF 55	Poseidon is responsible for analyzing operational mortality related to discharges during co-located, temporary stand-alone, and permanent stand-alone operations. In Tables 1 and 11 of this Annotated Matrix and in the HBDP Intake/Discharge Feasibility Assessment (Appendix H), Poseidon provides estimates of operational mortality due to the brine mixing zone

limitation (see §L chapter III.M.3). The area in excess of the receiving water limitation for salinity shall be determined by modeling and confirmed with monitoring. The report shall use any acceptable approach approved by the regional water board for evaluating mortality that occurs due to shearing stress resulting from the facility's discharge, including any incremental increase in mortality resulting from a commingled discharge.

channel. The size of the area has been determined through a hydrodynamic modeling study that is included in Appendices R will be confirmed with monitoring. The multiport diffuser is located 1,500 feet offshore where four or six diffuser would eject the brine into the water column at a high velocity to promote rapid diffusion and dispersion.

Mortality caused by shear stress was analyzed using the SED approach. The mortality due to shear including the incremental increase in mortality resulting from commingled discharge was derived by MBC and described in Appendices T and U. The diffuser related shear stress mortality is shown in Table 11, temporary and long term stand-alone HBDP operations and long term only stand-alone HBDP operations.

Table 11
Huntington Beach Desalination Project
Operational Mortality Related to Discharge Alternatives

Alternative	1		2	3
	Co-Located	Temporary Stand-alone	Long term Stand-alone	
Intake/Discharge Configuration	Power Plant Waste Water Effluent Intake and Comingled Waste Water Discharge	Power Plant Waste Water Effluent Intake and Diffuser Discharge due to HBDP[1]	Seawater - 1 mm Offshore Surface Intake Alternative with Diffuser Discharge	Seawater - 1 mm Onshore Intake with Diffuser Discharge
Diffuser Water Potentially Exposed to 20% Mortality	0 MGD	up to 115 MGD	180 MGD	180 MGD
Area of Production Foregone Due to Discharge	0 Acres	up to 8.14 Acres	22.5 Acres	22.5 Acres

1. As per the SED, an owner or operating proposing to commingle brine with wastewater would have to assess any incremental shearing related mortality that occurs as a result of adding the brine to existing effluent.

and shearing. There are discrepancies between the values provided in Tables 1 and 11 and Appendix H. Poseidon's comment in RCF 55 indicates that the area in which salinity exceeds 2.0 ppt above natural background levels was determined through modeling described in the Low-Flow Dilution Analysis at HBDP (Appendix R), but Appendix R does not provide a clear explanation of how this acreage was calculated under the different operating scenarios (i.e., co-located, temporary stand-alone, and permanent stand-alone). Tables 1 and 11 and Appendix H indicate that an ETM/APF analysis was used to calculate the brine mixing zone acreages under different operating scenarios, and the Technical Memorandum on Diffuser Discharge Analysis (Appendix T) describes how the ETM/APF analysis was used to estimate shearing-related mortality for "both a temporary commingled discharge and the ultimate stand-alone" HBDP.

Although the Ocean Plan requires that an ETM/APF analysis be used to estimate intake-related operational mortality as a result of entrainment effects, this approach is not appropriate for assessing discharge-related operational mortality (or construction-related mortality). The Final Staff Report for the Desalination Amendment to the Ocean Plan describes how ETM/APF is one of the main models used for assessing intake-related entrainment at desalination facilities. The State Water Board's Expert Review Panel on Intake Impacts and Mitigation recommended the ETM/APF method for calculating intake-related mitigation for desalination facilities, because it has been historically used in California to determine mitigation for entrainment through seawater intakes. The Final Staff Report states that a desalination facility's discharge could be modeled to determine an isohaline, the area where salinity exceeds an established level above natural background levels. Then mitigation could be based on that specific isohaline. Furthermore, the Final Staff Report explains that shearing-related mortality would only occur within the area that exceeds 2.0 ppt above natural background salinity. Thus, additional mitigation solely for shearing-related mortality may not be necessary if shearing stress is confined to the area where the salinity exceeds 2.0 ppt above natural background levels.

The report titled Initial Dilution in a Quiescent Ocean Due to Discharges of Concentrated Seawater from the HBDP (Attachment 9), submitted on September 1, 2016, states that the HBDP would be in compliance with the receiving water limitation for salinity at 98 m during temporary stand-alone operations and at 29.4 m during permanent stand-alone operations. These values should be used to calculate estimates for discharge-related operational mortality.

Poseidon is responsible for analyzing operational mortality related to discharges during co-located, temporary stand-alone, and permanent stand-alone operations. For co-located

				and temporary stand-alone operations, Poseidon shall assess any incremental increase in mortality resulting from a commingled discharge. **<u>Please provide the following information</u>:** • **An assessment of any incremental increase in mortality resulting from a commingled discharge during co-located and temporary stand-alone operations.** • **Calculations and estimates of discharge-related operational mortality during co-located, temporary stand-alone, and permanent stand-alone operations. These estimates shall be based on the area in which salinity exceeds 2.0 parts per thousand above natural background salinity, and an ETM/APF analysis is not an appropriate approach for this estimate. For temporary stand-alone operations, please use the value of 98 m from Attachment 9 to estimate the area in which salinity exceeds 2 ppt above natural background salinity. For permanent stand-alone operations, please use the value of 29.4 m from Attachment 9 to estimate the area in which salinity exceeds 2 ppt above natural background salinity. The area shall be calculated horizontally from each discharge point.** • **An evaluation of shearing-related mortality, including whether it occurs outside of the area in which salinity exceeds 2 ppt above natural background salinity. If shearing-related mortality is confined to the area in which salinity exceeds 2 ppt above natural background salinity, mitigation for shearing-related mortality is not needed. An ETM/APF analysis is not appropriate for shearing-related mortality for reasons stated in RCF 54.**
(c) For construction-related mortality, the report shall use any acceptable approach approved by the regional water board for evaluating the mortality that occurs within the area disturbed by the facility's construction. The regional water board may determine that the construction-related disturbance does not require mitigation because the disturbance is temporary and the habitat is naturally restored.	No	The offshore intake and multiport diffuser alternatives would require construction in the marine environment. The onshore intake would not require construction in the marine environment. The construction of the offshore modifications would be done from a barge and will have minor temporary impacts to the seafloor. The offshore surface intake alternative and the discharge diffuser will have 0.003 acres and 0.1 acres, respectively, of permanent impacts remaining after construction.	RCF 56	As part of the amended ROWD, Poseidon provided a document titled HBDP Seawater Intake and Discharge System Modifications to Meet Desalination Amendment (Appendix JJ), which describes the wedgewire screens and multiport diffuser that Poseidon proposes to install for the HBDP. This report does not describe mortality of all forms of marine life associated with the construction of these modifications. **<u>Please provide the following information:</u>** • **Provide estimates for construction-related mortality that may result from the proposed intake and discharge modifications. Please note that ETM/APF is not an appropriate approach for obtaining these estimates.**
(d) Upon approval of the report by the regional water board in consultation	Yes	The direct and indirect effects on all forms of marine life resulting from various alternatives under consideration for the HBDP are summarized in	RCF 57	The information that Poseidon has provided is insufficient to assess the marine life mortality associated with the currently

with State Water Boards staff, the calculated marine life mortality shall form the basis for the mitigation provided pursuant to this section.		Table7.		proposed HBDP. See Water Boards staffs' comments and information requests in RCF 52-56.
(2) The owner or operator shall mitigate for the mortality of all forms of marine life determined in the report above by choosing to either complete a mitigation project as described in chapter III.M.2.e.(3) or, if an appropriate fee-based mitigation program is available, provide funding for the program as described in chapter III.M.2.e.(4). The mitigation project or the use of a fee-based mitigation program and the amount of the fee that the owner or operator must pay is subject to regional water board approval.	Yes	A Marine Life Mitigation Plan (the "MLMP") will developed to satisfy the HBDP's mitigation needs pursuant to chapter III.M.2.e.(3) for HBDP long term, permanent stand-alone operations A MLMP is being prepared in coordination with the California State Lands Commission involving the Bolsa Chica wetlands. The MLMP was developed pursuant to Desalination Amendment guidance, and includes a calculation of the Area of Production Foregone due to the operational effects (i.e., intake and discharge) of the Project.	RCF 58	On September 1, 2016, Poseidon submitted documents describing potential mitigation options for the proposed HBDP: Comparison of Selected Southern California Tidal Wetlands as Potential Sites for Mitigation of Impacts Associated with Desalination Projects (Attachment 6), MLMP at Newland Marsh (Attachment 7), and MLMP: Bolsa Chica (Attachment 8). Poseidon presents fee-based mitigation proposals for Newland Marsh and Bolsa Chica. As mentioned in RCF 52, the Regional Water Board will determine the appropriate mitigation requirements to compensate for the intake and mortality of all forms of marine life associated with the construction and operation of the long-term stand-alone facility. Per the Interagency Permitting Sequencing Framework Agreement signed on October 3, 2016, Regional Board staff will consult with Coastal Commission staff on the MLMP for the proposed HBDP to ensure both agencies' staffs recommend approval of the same mitigation permit conditions. The MLMPs for Newland Marsh and Bolsa Chica (Attachments 7-8) describe potential fee-based mitigation options through the Huntington Beach Wetlands Conservancy and State Lands Commission for Bolsa Chica. Because Poseidon's MLMPs contemplate specific projects that would be funded by Poseidon to fulfill its mitigation requirements, it appears that the proposed mitigation falls under Ocean Plan chapter III.M.2.e.(3). Please see Water Boards staffs' comment on RCF 52.
(3) Mitigation Option 1: Complete a Mitigation Project. The mitigation project must satisfy the following provisions:	Yes	The final MLMP presented to the Regional Board for approval will address these requirements.	RCF 59a	As mentioned in RCF 58, it appears that Poseidon's proposed mitigation falls under Ocean Plan chapter III.M.2.e.(3) rather than chapter III.M.2.e.(4).
(a) The owner or operator shall submit a Mitigation Plan. Mitigation Plans shall include: project objectives, site selection, site protection instrument (the legal arrangement or instrument that will be used to ensure the long-term protection of the compensatory mitigation project site), baseline site conditions, a mitigation work plan, a maintenance plan, a long-term management plan, an adaptive management plan, performance standards and success criteria, monitoring requirements, and financial assurances.		See RCF 58 and 59.	RCF 59b	Water Boards staffs provide the following information requests on the MLMPs for Newland Marsh and Bolsa Chica (Attachments 7-8), in case the Regional Water Board determines that these constitute the best mitigation measures feasible. **<u>Please provide the following information</u>:** • **Update the MLMP for Newland Marsh to include the following components required by the Ocean Plan: site selection, site protection instrument, baseline site conditions, mitigation work plan, maintenance plan, long-term management plan, adaptive management plan, performance standards and success criteria, monitoring requirements, and financial assurances.** • **Update the MLMP for Bolsa Chica to include a maintenance plan and long-term management plan.**

(b) The mitigation project must meet the following requirements:				
i. Mitigation shall be accomplished through expansion, restoration or creation of one or more of the following: kelp beds, estuaries, coastal wetlands, natural reefs, MPAs, or other projects approved by the regional water board that will mitigate for intake and mortality of all forms of marine life associated with the facility.	Yes	See RCF 58 and 59.	RCF 60	The MLMPs for Newland Marsh and Bolsa Chica (Attachments 7-8) state that the fish within the wetland areas of the mitigation projects are predominately estuarine species that may provide a forage base for marine species but are not the same species as found in the vicinity of the intake/discharge of the project. The Regional Water Board will take this into consideration when determining the appropriate mitigation requirements as part of the 13142.5(b) determination.
ii. The owner or operator shall demonstrate that the project fully mitigates for intake-related marine life mortality by including expansion, restoration, or creation of habitat based on the APF acreage calculated in the Marine Life Mortality Report above. The owner or operator using surface water intakes shall do modeling to evaluate the areal extent of the mitigation project's production area to confirm that it overlaps the facility's source water body. Impacts on the mitigation project due to entrainment by the facility must be offset by adding compensatory acreage to the mitigation project.	Yes	See RCF 58 and 59.	RCF 61	The MLMPs for Newland Marsh and Bolsa Chica (Attachments 7-8) state that the wetland areas of the mitigation projects are within proximity to HBDP. **<u>Please provide the following information</u>:** • **Modeling data that evaluates the areal extent of the proposed mitigation project's production area to confirm that it overlaps the facility's source water.** • **An analysis if there will be impacts on the mitigation project due to entrainment by HBDP and provide estimates of the corresponding compensatory acreage that would be added to the mitigation project.**
iii. The owner or operator shall demonstrate that the project also fully mitigates for the discharge-related marine life mortality projected in the Marine Life Mortality Report above.	Yes	See RCF 58 and 59.	RCF 62	See Water Boards staffs' comments and information requests in RCF 55.
iv. The owner or operator shall demonstrate that the project also fully mitigates for the construction-related marine life mortality identified in the Marine Life Mortality Report above.	Yes	Retrofitting the HBGS discharge outfall with a multiport diffuser does require construction in the marine environment. The construction of the offshore modifications would be done from a barge and will have minor temporary impacts to the seafloor.	RCF 63	See Water Boards staffs' comments and information request in RCF 56.
v. The regional water board may permit out-of-kind mitigation for mitigation of open water or soft-bottom species. In-kind mitigation shall be done for all other species whenever feasible.	Yes	Poseidon respectfully request that the Regional Water Board permit out-of-kind mitigation for mitigation of open water and soft bottom species. The acreage requirements set forth in the Carlsbad Desalination Plant's MLMP approved by the San Diego Regional Water Quality Control Board and the Coastal Commission are based on out-of-kind mitigation for mitigation of open water or soft-bottom species and in-kind mitigation for all other species. (see Appendix Y, Carlsbad Desalination Project Coastal	RCF 64	The MLMPs for Newland Marsh and Bolsa Chica (Attachment 7-8) describe the projects as out-of-kind mitigation. When determining the appropriate mitigation requirements as part of the 13142.5(b) determination, the Regional Water Board will evaluate whether to permit out-of-kind mitigation for mitigation of open water or soft-bottom species.

		Commission MLMP Condition Compliance, November 2008 and RCF 68)		
vi. For out-of-kind mitigation, an owner or operator shall evaluate the biological productivity of the impacted open water or soft-bottom habitat calculated in the Marine Life Mortality Report and the proposed mitigation habitat. If the mitigation habitat is a more biologically productive habitat (e.g. wetlands, estuaries, rocky reefs, kelp beds, eelgrass beds, surfgrass beds), the regional water boards may apply a mitigation ratio based on the relative biological productivity of the impacted open water or soft-bottom habitat and the mitigation habitat. The mitigation ratio shall not be less than one acre of mitigation habitat for every ten acres of impacted open water or soft-bottom habitat.	Yes	Poseidon respectfully request that the Regional Water Board permit out-of-kind mitigation for mitigation of open water and soft bottom species at a mitigation ratio of one acre of mitigation habitat for every ten acres of impacted open ocean and soft- bottom habitat. The acreage requirements set forth in the Carlsbad Desalination Plant's MLMP approved by the San Diego Regional Water Quality Control Board and the Coastal Commission are based on a mitigation ratio derived from the relative biological productivity of the impacted open water or soft-bottom habitat and the inter-tidal mitigation habitat to be provided by Poseidon. The mitigation ratio is one acre of mitigation habitat for every ten acres of impacted open water and/or soft-bottom habitat (Appendix Y, Carlsbad Desalination Project Coastal Commission MLMP Condition Compliance, November 2008 and RCF 68)	RCF 65	In the Memorandum on the Approach for APF Calculations at Huntington Beach (Appendix V) and the Technical Memorandum on Diffuser Discharge Analysis (Appendix T), a 10:1 mitigation ratio was applied to all taxa, except for CIQ gobies, which had a 1:1 mitigation ratio. The Regional Water Board has the discretion to apply mitigation ratios if the data support that it would be appropriate to do so. To determine whether a mitigation ratio should be applied, Water Boards staffs need information on the relative biological productivity of the impacted habitat and the proposed mitigation habitat. The MLMPs for Newland Marsh and Bolsa Chica (Attachment 7-8) describe the benefits of the proposed out-of-kind mitigation projects but do not provide a comparison of the biological productivity of the impacted habitat and the proposed mitigation habitat. Responses to Water Boards staffs' information requests in RCF 54 will assist the Regional Water Board in determining whether and what type of mitigation ratios should be applied. **<u>Please provide the following information</u>:** • **Provide evaluations of the biological productivity of the impacted habitat and the proposed mitigation habitat.** • **Explain basis for how species were classified as estuarine taxa vs. coastal taxa in Appendix V.**
vii. For in-kind mitigation, the mitigation ratio shall not be less than one acre of mitigation habitat for every one acre of impacted habitat.	Yes	Poseidon respectfully requests that acreage requirements set forth in the MLMP are based on a mitigation ratio for estuarine species is one acre of mitigation habitat for every acre of impacted estuarine habitat. The acreage requirements set forth in the Carlsbad Desalination Plant's MLMP approved by the San Diego Regional Water Quality Control Board and the Coastal Commission are based on a mitigation ratio for estuarine species is one acre of mitigation habitat for every acre of impacted estuarine habitat. (Appendix Y Carlsbad Desalination Project Coastal Commission MLMP Condition Compliance, November 2008 and RCF 68)	RCF 66	Water Boards staff agrees that the Ocean Plan requires a mitigation ratio of no less than 1:1 be used for in-kind mitigation.
viii. For both in-kind and out-of-kind mitigation, the regional water boards may increase the required mitigation ratio for any species and impacted natural habitat calculated in the Marine Life Mortality Report when appropriate to account for imprecisions associated with mitigation, including but not limited to, the likelihood of success, temporal delays in productivity, and the difficulty of	Yes	Poseidon respectfully request a mitigation ratio of 10:1 for offshore open water habitat, recognizing the greater productivity of estuarine wetlands. When calculating the habitat required a very conservative 95% confidence interval was applied. As per the SED, the 95% confidence interval accounts for imprecisions associated with mitigation, including but not limited to, the likelihood of success, temporal delays in productivity, and the difficulty of restoring or establishing the desired productivity functions.	RCF 67	The Regional Water Board has the discretion to increase the mitigation ratio for any species and impacted natural habitat calculated in the Marine Life Mortality Report when appropriate to account for imprecisions associated with mitigation, including but not limited to, the likelihood of success, temporal delays in productivity, and the difficulty of restoring or establishing the desired productivity functions.

restoring or establishing the desired productivity functions.				
ix. The rationale for the mitigation ratios must be documented in the administrative record for the permit action.	Yes	Poseidon respectfully request a mitigation ratio of 10:1 for offshore open water habitat, recognizing the greater productivity of estuarine wetlands. When calculating the habitat required a very conservative 95% confidence interval was applied. The rationale's for the mitigation ratios are found in Appendix T, U, V and Y. The rationale for the mitigation ratios is documented in Appendix Y, Carlsbad Desalination Project Coastal Commission MLMP Condition Compliance, November 2008, page 13. "However, in recognition of the impracticality of creating 55 to 72 acres of offshore open water habitat and recognizing the relatively greater productivity rates per acre of estuarine wetland habitats, Dr. Raimondi suggested that these offshore impacts be "converted" to estuarine mitigation areas. That is, by assuming that successfully restored wetland habitat would be ten times more productive than a similar area of nearshore ocean waters, every ten acres of nearshore impacts could be mitigated by creating or restoring one acre of estuarine habitat.(Footnote 9) Applying this 10:1 ratio to the nearshore APFs results in 5.5, 6.4, and 7.2 acres, respectively. Although this approach would result in "out of kind" mitigation, it is also expected to produce overall better mitigation – not only is it not practicable to create nearshore, open water habitat, that habitat type is already well-represented along the shoreline, whereas creating or restoring coastal estuarine habitat types would support a long-recognized need to increase the amount of those habitat types in Southern California. (Footnote 10)" Foot note 9 This approach – converting offshore entrainment impacts to areas of wetland mitigation – has been used to help determine mitigation in several recent California power plant siting cases, including Huntington Beach (00-AFC-13), Morro Bay (00-AFC-12), and others. Foote note 10 See, for example, the Southern California Wetlands Recovery Project at http://www.scwrp.org/index.htm	RCF 68	Please see Water Boards staffs' comments and information requests in RCF 65.
(c) The Mitigation Plan is subject to approval by the regional water board in consultation with State Water Boards staff and with other agencies having authority to condition approval of the project and require mitigation.	Yes	Noted.	RCF 69	Regional Board staff will consult with Coastal Commission staff on the MLMPs for the proposed HBDP to ensure both agencies' staffs recommend approval of the same mitigation permit conditions.
(4) Mitigation Option 2: Fee-based Mitigation Program. If the regional water board determines that an appropriate fee-based mitigation program has been established by a public agency, and that payment of a fee to the mitigation program will result in the creation and ongoing implementation of a mitigation project that meets the requirements of section chapter L M.2.e.(3), the owner or operator may pay a fee to the mitigation program in lieu of completing a mitigation project.	No		RCF 70	As mentioned in RCF 58, it appears that Poseidon's proposed mitigation falls under Ocean Plan chapter III.M.2.e.(3) rather than chapter III.M.2.e.(4).
(a) The agency that manages the fee-based mitigation program must have	No		RCF 71	

	legal and budgetary authority to accept and spend mitigation funds, a history of successful mitigation projects documented by having set and met performance standards for past projects, and stable financial backing in order to manage mitigation sites for the operational life of the facility.				
(b)	The amount of the fee shall be based on the cost of the mitigation project, or if the project is designed to mitigate cumulative impacts from multiple desalination facilities or other development projects, the amount of the fee shall be based on the desalination facility's fair share of the cost of the mitigation project.	No		RCF 72	
(c)	The manager of the fee-based mitigation program must consult with the California Department of Fish and Wildlife, Ocean Protection Council, Coastal Commission, State Lands Commission, and State and regional water boards to develop mitigation projects that will best compensate for intake and mortality of all forms of marine life caused by the desalination facility. Mitigation projects that increase or enhance the viability and sustainability of all forms of marine life in Marine Protected Areas are preferred, if feasible.	No		RCF 73	
(5)	California Department of Fish and Wildlife, the regional water board, and State Water Board may perform audits or site inspections of any mitigation project.	Yes	Noted.	RCF 74	
(6)	An owner or operator, or a manager of a fee-based mitigation program, must submit a mitigation project performance report to the regional water board 180 days prior to the expiration date of their NPDES permit.	No		RCF 75	
(7)	For conditionally permitted facilities or expanded facilities, the regional water boards may:			RCF 76	
(a)	Account for previously-approved mitigation projects associated with a facility when making a new Water Code section 13142.5(b) determination.	No		RCF 77	
(b)	Require additional mitigation when	No		RCF 78	

making a new Water Code section 13142.5(b) determination for any additional mortality of all forms of marine life resulting from the occurrence of the conditional event or the expansion of the facility. The additional mitigation must be to compensate for any additional construction, discharge, or other increases in intake or impacts or an increase in intake and mortality of all forms of marine life.				
3 Receiving Water Limitation for Salinity				
(a) Chapter III.M.3 is applicable to all desalination facilities discharging brine into ocean waters, including facilities that commingle brine and wastewater.	Yes	Poseidon acknowledges that Chapter III.M.3 is applicable to the HBDP.	RCF 79	Note that the receiving water limitation for salinity applies to the NPDES permit for the brine discharge and is not a site, design, or technology requirement derived directly from section 13142.5(b). As a result, Water Boards staffs will provide more detailed comments and any information needs related to the receiving water limitation for salinity upon full review of Poseidon's report of waste discharge.
(b) The receiving water limitation for salinity shall be established as described below:			RCF 80	No Comment.
(1) Discharges shall not exceed a daily maximum of 2.0 parts per thousand (ppt) above natural background salinity measured no further than 100 meters (328 ft) horizontally from the each discharge point. There is no vertical limit to this zone.	Yes	Outside of the brine mixing zone, salinity would not exceed 2 ppt over ambient natural background salinity. The benthic area encompassed by the brine mixing zone would be no more than 7.5 acres and 0.15 acres for the co-located, temporary and long-term stand-alone operation and the long-term stand-alone only operation, respectively.	RCF 81	Please see Water Boards staffs' comments and information requests on RCF 55.
(2) In determining an effluent limit necessary to meet this receiving water limitation, permit writers shall use the formula in chapter III.C.4 that has been modified for brine discharges as follows: Equation 1: Ce= Co + Dm(2.0 ppt) Ce= (2.0 ppt + Cs) + Dm(2.0 ppt) Where: Ce= the effluent concentration limit, ppt Co= the salinity concentration to be met at the completion of initial dilution= 2.0 ppt + Cs Cs= the natural background salinity, ppt Dm= minimum probable initial dilution expressed as parts seawater per part brine discharge	Yes	Noted.	RCF 82	Please see Water Boards staffs' comments and information requirements on RCF 79.
(a) The fixed distance referenced in the initial dilution definition shall be no more than 100 meters (328 feet).	Yes	Noted.	RCF 83	Please see Water Boards staffs' comments and information requests in RCF 79. The fixed distance referenced in the initial dilution applies only to salinity here and not to the other Ocean Plan constituents.
(b) In addition, the owner or operator shall develop a dilution factor (Dm) based on the distance of 100 meters (328 feet) or initial dilution, whichever is smaller. The dilution factor (Dm) shall be developed within the brine		Minimum Month Initial Dilution will be submitted with the ROWD	RCF 84	Please see Water Boards staffs' comments and information requests in RCF 79.

mixing zone using applicable water quality models that have been approved by the regional water boards in consultation with State Water Boards staff.				
(c) The value 2.0 ppt in Equation 1 is the maximum incremental increase above natural background salinity (Cs) allowed at the edge of the brine mixing zone. A regional water board may substitute an alternative numeric value for 2.0 ppt in Equation 1 based upon the results of a facility-specific alternative salinity receiving water limitation study, as described in chapter III.M.3.c below.	No		RCF 85	This section is not applicable to the HBDP as Poseidon is not requesting an alternative receiving water limitation for salinity.
c. An owner or operator may submit a proposal to the regional water board for approval of an alternative (other than 2 ppt) salinity receiving water limitation to be met no further than 100 meters horizontally from the discharge. There is no vertical limit to this zone.	No		RCF 86	This section is not applicable to the HBDP as Poseidon is not pursuing an alternative receiving water limitation for salinity.
(1) To determine whether a proposed facility-specific alternative receiving water limitation is adequately protective of beneficial uses, an owner or operator shall:			RCF 87	This section is not applicable to the HBDP as Poseidon is not pursuing an alternative receiving water limitation for salinity.
(a) Establish baseline biological conditions at the discharge location and at reference locations over a 12-month period prior to commencing brine discharge. The biologic surveys must characterize the ecologic composition of habitat and marine life using measures established by the regional water board. At their discretion, the regional water boards may permit the use of existing data to meet this requirement.	No			This section is not applicable to the HBDP as Poseidon is not pursuing an alternative receiving water limitation for salinity.
(b) Conduct at least the following chronic toxicity Whole Effluent Toxicity (WET) tests: • germination and growth for giant kelp (Macrocystis pyrifera); • development for red abalone (Haliotis refescens); • development and fertilization for purple urchin (Strongleocentrotus purpuratus); development and fertilization for sand dollar	No			This section is not applicable to the HBDP as Poseidon is not pursuing an alternative receiving water limitation for salinity.

(Dendraster excentricus); • larval growth rate for topsmelt (Atherniops affinis). WET tests shall be performed by an Environmental Laboratory Accreditation Program (ELAP)certified laboratory.				
(c) The regional water board in consultation with State Water Boards staff may require an owner or operator to do additional toxicity studies if needed.	No			This section is not applicable to the HBDP as Poseidon is not pursuing an alternative receiving water limitation for salinity.
(2) The regional water board in consultation with the State Water Boards staff may require an owner or operator to provide additional studies or information in order to approve a facility-specific alternative receiving water limitation for salinity.	No		RCF 88	This section is not applicable to the HBDP as Poseidon is not pursuing an alternative receiving water limitation for salinity.
(3) The facility-specific alternative receiving water limitation shall be based on the lowest observed effect concentration (LOEC) for the most sensitive species and toxicity endpoint as determined in the chronic toxicity studies. The regional water board in consultation with State Water Boards staff has discretion to approve the proposed facility specific alternative receiving water limitation for salinity.	No		RCF 89	This section is not applicable to the HBDP as Poseidon is not pursuing an alternative receiving water limitation for salinity.
(4) The regional water board shall review a facility's monitoring data, the studies as required in chapter III.M.4 below, or any other information that the regional water board deems to be relevant to periodically assess whether the facility-specific alternative receiving water limitation or salinity is adequately protective of beneficial uses. The regional water board may eliminate or revise a facility-specific alternative receiving water limitation for salinity based on its assessment of the data.	No		RCF 90	This section is not applicable to the HBDP as Poseidon is not pursuing an alternative receiving water limitation for salinity.
d. The owner or operator of a facility that has received a conditional Water Code section 13142.5(b) determination and is over 80 percent constructed by [the effective date of this plan] that proposes flow augmentation using a surface water intake may submit a proposal to the regional water board in consultation with the State Water Boards staff for approval of an alternative brine mixing zone not to exceed 200 meters laterally from the discharge point and	No		RCF 91	This section is not applicable to the HBDP.

throughout the water column. The owner or operator of such a facility must demonstrate, in accordance with chapter III.M.2.d.(2)(c), that the combination of the alternative brine mixing zone and flow augmentation using a surface water intake provide a comparable level of intake and mortality of all forms of marine life as the combination of the standard brine mixing zone and wastewater dilution if wastewater is available, or multiport diffusers if wastewater is unavailable. In addition to the analysis of the effects required by chapter III.M.2.d.(2)(c), the owner or operator must also evaluate the individual and cumulative effects of the alternative brine mixing zone on the intake and mortality of all forms of marine life. In no case may the discharge result in hypoxic conditions outside of the alternative brine mixing zone. If an alternative brine mixing zone is approved, the alternative distance and the areal extent of the alternative brine mixing zone shall be used in lieu of the standard brine mixing zone for all purposes, including establishing an effluent limitation and a receiving water limitation for salinity, in chapter III.M.				
e. Existing facilities that do not meet the receiving water limitation at the edge of the brine mixing zone and throughout the water column by [the effective date of this plan] must either: 1) establish a facility-specific alternative receiving water limitation for salinity as described in chapter III.M.3.c; or, 2) upgrade the facility's brine discharge method in order to meet the receiving water limitation in chapter III.M.3.b in accordance with the State Water Board's Compliance Schedule Policy, as set forth in (e) below. An owner or operator that chooses to upgrade the facility's method of brine discharge disposal:	No		RCF 92	This section is not applicable to the HBDP, since it is a new facility. However, this section will apply when HBDP becomes an existing facility. It is the Water Boards' expectation that the HBDP will be designed and operated to meet the receiving water limitation for salinity.
(1) Must demonstrate to the regional water board that the brine discharge does not negatively impact sensitive habitats, sensitive species, MPAs, or SWQPAs.	No		RCF 93	This section is not applicable to the HBDP, since it is a new facility. However, this section will apply when HBDP becomes an existing facility. It is the Water Boards' expectation that the HBDP will be designed and operated to meet the receiving water limitation for salinity.
(2) Is subject to the Considerations for Brine Discharge Technology described in chapter III.M.2.d.(2).	No		RCF 94	This section is not applicable to the HBDP, since it is a new facility. However, this section will apply when HBDP becomes an existing facility. It is the Water Boards' expectation that the HBDP will be designed and operated to meet the receiving water limitation for salinity.
f. The regional water board may grant compliance schedules for the requirements for brine waste discharges for desalination facilities. All compliance schedules shall be in accordance		Noted.	RCF 95	This section is not applicable to the HBDP, since it is a new facility. However, this section will apply when HBDP becomes an existing facility. It is the Water Boards' expectation that the HBDP will be designed and operated to meet the receiving

	with the State Water Board's Compliance Schedule Policy, except that the salinity receiving water limitation set forth in chapters III.M.3.b and III.M.3.c. shall be considered to be a "new water quality objective" as used in the Compliance Schedule Policy.				water limitation for salinity.
	g. The regional water board in consultation with the State Water Boards staff may require an owner or operator to provide additional studies or information if needed. All studies and models are subject to the approval of the regional water board in consultation with State Water Boards staff. The regional water board may require an owner or operator to hire a neutral third party entity to review studies and models and make recommendations to the regional water board.		Noted.	RCF 96	No comment.
4 Monitoring and Reporting Programs					
	a. The owner or operator of a desalination facility must submit a Monitoring and Reporting Plan to the regional water board for approval. The Monitoring and Reporting Plan shall include monitoring of effluent and receiving water characteristics and impacts to all forms of marine life. The Monitoring and Reporting Plan shall, at a minimum, include monitoring for benthic community health, aquatic life toxicity, hypoxia, and receiving water characteristics consistent with Appendix III of this Plan and for compliance with the receiving water limitation in chapter III.M.3. Receiving water monitoring for salinity shall be conducted at times when the monitoring locations are most likely affected by the discharge. For new or expanded facilities the following additional requirements apply:	Yes	**Proposed Monitoring and Reporting Plan** **Permitted HBDP Operations**. Regional Water Board Order No. R8-2012-0007 establishes monitoring requirements for the HBDP within Attachment E - Monitoring and Reporting Program. Order No. R8-2012-0007 establishes requirements for HBDP discharge operations at an annual potable water production rate of 50 million gallons per day (gpd) under: • co-located operating conditions where HBDP discharge flows would be blended with heated cooling water from the HBGS prior to discharge to the Pacific Ocean. • temporary stand-alone conditions when HBGS cooling water flows are insufficient and HBGS intake pumps would be operated for the benefit of providing unheated dilution water for the benefit of HBDP. Construction of HBDP facilities are anticipated to be completed in 2019. Proposed co-located seawater desalination operations are scheduled to begin in 2019 which will utilize HBGS cooling water as intake flow and utilize HBGS pumps and effluent discharge facilities. When the HBGS discharge is terminated (scheduled for 2020), HBDP will convert to long-term stand-alone operations where HBDP process flow (reverse osmosis concentrate and filter backwash) will be discharge to the ocean via the existing discharge pipeline. Under such long-term stand-alone operations, Poseidon proposes to operate the HBDP at a potable water production capacity of an annual average of 50 mgd. The Amended Report of Waste Discharge seeks NPDES requirements for the HBDP discharge under co-located, temporary stand-alone operations and long-term stand-alone operations. Accordingly, the Monitoring and Reporting Plan presented in Appendix Z addresses monitoring needs for all operational scenarios. **Focus on Brine Mixing Zone.** The 2015 Ocean Plan amendments require that receiving water salinity not exceed 2 parts per thousand (ppt) above ambient beyond a designated brine mixing zone. Provision III.M.3.d of the	RCF 97	See RCF 1 regarding the applicability and relevance Order No. R8-2012-0007 to the various HBDP operating scenarios. Appendix Z, the proposed Monitoring and Reporting Plan, was not included in the request for a section 13142.5(b) determination. Water Boards staffs have not yet received Appendix Z to review and therefore are unable to provide feedback on potential additional information needed to meet the requirements in this section of the Ocean Plan. **<u>Please submit the following information:</u>** • **A Monitoring and Reporting Plan that comports with the Chapter III.M.4 of the Ocean Plan and Ocean Plan Appendix III Standard Monitoring Procedures.**

		Ocean Plan establishes requirements under which a brine mixing zone may be established at a 100 meter (328-feet) distance from the discharge point. Existing monitoring provisions of Order No. R8-2012-0007 do not provide for assessment of conditions along and within the brine mixing zone boundaries established within the 2015 Ocean Plan amendments. Accordingly, receiving water monitoring proposed in Appendix Z focuses on water quality effects at the brine mixing zone boundary as well as outlying waters. **Characterization of Conditions:** Existing Permitted Operations. As part of the proposed Monitoring and Reporting Plan (Appendix Z), the existing monitoring requirements of Order No. R8-2012-0007 for HBDP co-located and temporary stand-alone conditions are reviewed, and supplemental monitoring is proposed to: • adequately assess compliance of existing permitted co-located and stand-alone operations with Ocean Plan salinity and toxicity requirements, • ensure that existing permitted operations are consistent with protecting beneficial uses, including aquatic and benthic habitat, and • assess receiving water and benthic conditions within and beyond the brine mixing zone. **Characterization of Conditions: Long-Term Stand-Alone Operations.** When HBGS once-through cooling water operations are terminated in 2020, HBDP will transition to long-term stand-alone mode. As part of these long-term stand-alone operations, new dedicated HBDP intake facilities will be placed in operation and HBDP will assume control of the existing intake and discharge facilities. Monitoring proposed to support and address proposed long-term stand-alone operations focuses on: • identifying baseline conditions prior to initiation of the long-term stand-alone operations, • identifying and characterizing any changes in influent, effluent, or receiving water quality that occur as a result of implementation of long-term stand-alone operations, • assessing compliance of long-term stand-alone operations with Ocean Plan salinity and toxicity requirements, and • ensuring that long-term stand-alone operations are consistent with protecting beneficial uses, including aquatic and benthic habitat.		
(1) An owner or operator must perform facility-specific monitoring to demonstrate compliance with the receiving water limitation for salinity, and evaluate the potential effects of the discharge within the water column, bottom sediments, and the benthic communities. Facility specific monitoring is required until the regional water board determines that a regional monitoring program is adequate to ensure compliance with the receiving water	Yes	See the Monitoring and Reporting Plan presented in Appendix Z for the proposed facility-specific monitoring to demonstrate compliance with the receiving water limitation for salinity, and evaluate the potential effects of the discharge within the water column, bottom sediments, and the benthic communities.	RCF 98	The Monitoring and Reporting Plan requested in RCF 97 must include a facility-specific monitoring plan.

	limitation. The monitoring and reporting plan shall be reviewed, and revised if necessary, upon NPDES permit renewal.				
(2)	Baseline biological conditions shall be established at the discharge location and at a reference location prior to commencement of construction. The owner or operator is required to conduct biological surveys (e.g., Before-After Control-Impact study), that will evaluate the differences between biological communities at a reference site and at the discharge location before and after the discharge commences. The regional water board will use the data and results from the surveys and any other applicable data for evaluating and renewing the requirements set forth in a facility's NPDES permit.	Yes	See the Monitoring and Reporting Plan presented in Appendix Z for the proposed facility-specific monitoring to identify baseline conditions prior to initiation of the long-term stand-alone operations.	RCF 99	As the HBDP is a new facility and is not yet constructed, baseline biological conditions need to be established before construction of the temporary-stand alone and co-located facilities, not after. As the proposed project is projected to change under the different operating scenarios, the Monitoring and Reporting Plan must include an analysis that characterizes the changes in biological conditions over time. Rather than require a Before-After Control-Impact (BACI) study for each potential site, Water Boards staffs will require a BACI study for Property 1G if the Regional Water Board determines that it is the best available site. The BACI study includes a portion that must be completed **prior to commencement of construction** of any phase of the HBDP (i.e. prior to constructing the co-located facility). This study will establish biological conditions at the discharge location by providing data about the biological community throughout the water column and on the benthos. **<u>Please submit the following information:</u>** • **For each potential site, provide a list of proposed reference location(s) and justification for why the reference location is appropriate for that site.** • **A project timeline that includes when the baseline studies will be conducted and the duration of the studies.** • **A BACI study for the proposed project. Please contact Water Boards staffs to review the study plan, prior to initiating the study. The baseline biological conditions must be established before construction of any phase of the HBDP begins so please consider this in the project timeline.**