5010-06-01

Delta Diablo Sanitation District

OFFICE AND TREATMENT PLANT: 2500 PITTSBURG-ANTIOCH HIGHWAY, ANTIOCH, CA 94509-1373
TELEPHONE: (925) 778-4040 ADMIN. FAX: (925) 778-8513 ENG. FAX: (925) 706-7156 MAINT. FAX: (925) 778-8565

October 13, 2000

Ms. Shannon Whiton
Department of Health Services
2151 Berkeley Way, Room 458
Berkeley, CA 94704-1101

Mr. Keyvan Moghbel
San Francisco Bay
Regional Water Quality Control Board
1515 Clay Street, Suite 1400
Oakland, CA 94612

SUBJECT: AMENDMENT NO. 3 TO ENGINEERING REPORT, DELTA DIABLO SANITATION DISTRICT, RECYCLED WATER FACILITY, PROJECT NO. 5010

Dear Ms. Whiton and Mr. Moghbel:

This letter submits Amendment No. 3 to the Engineering Report for Delta Diablo Sanitation District's Recycled Water Facility for your consideration and approval. The Engineering Report was initially submitted June 25, 1999, with Amendment No.1 submitted July 23, 1999, and Amendment No. 2 submitted January 7, 2000. The initial Engineering Report was based on design criteria developed at the time of the Preliminary Design Report (approximately 30% design completion). Since then, there have been several changes to the Recycled Water Facility (RWF) process sizing and configuration through final design and construction. The RWF construction is approximately 65% complete as of this writing.

This Amendment No. 3 consists of changes to Section 4 - Recycled Water Use Areas of the original Engineering Report. The changes are based on actual design and construction at the two power plants related to their recycled water systems. Note that all originally proposed connections between the recycled water systems and the potable system have been eliminated through re-design. The following list describes the changes in Amendment No. 3.

- General: Due to a power plant name change, CHANGE "PDEF" references to "LMEC" unless otherwise noted.
- Page 4-1: DELETE the following text under second paragraph, "Neither facility has been designed yet. Preliminary engineering work is currently being done to provide support for the California Energy Commission (CEC) permitting process. A decision from the CEC is expected in August 1999 and late 1999 for the PDEF and DEC plants, respectively."
- Page 4-1: DELETE the third paragraph, "Given the preliminary nature . . . water systems for the PDEF and DEC."
- Page 4-1: DELETE "is currently" under the fifth paragraph and REPLACE with "was originally"

- Page 4-4, fourth paragraph, third sentence: DELETE "DEC will also have some storage, although the configuration of that storage is not yet known." and REPLACE with "DEC will also have storage on RWF site."
- Page 4-4, sixth paragraph, third sentence: DELETE "PDEF" and REPLACE with "both plants".
- Page 4-4, sixth paragraph, fifth sentence: DELETE "DEC will dispose of its blowdown and other waste streams through a separate NPDES permit to be obtained by DEC."
- Page 4-9, fourth paragraph, heading: INSERT "(LMEC Only)" at the end of heading.
- Page 4-9, fourth paragraph, fourth sentence: DELETE "The DEC will also have demineralized water storage of an undefined volume." and REPLACE with "The DEC will not use recycled water for HRSG make-up."
- Page 4-10, fifth paragraph, second sentence: DELETE "reclaimed" and REPLACE with "demineralized"
- Page 4-10, sixth paragraph: DELETE entire paragraph.
- Page 4-11, first paragraph: DELETE entire paragraph.
- Page 4-11, first bullet, third sentence: DELETE "The PDEF" and REPLACE with "Both plants".
- Page 4-11, first bullet, fifth sentence: DELETE "PDEF" and REPLACE with "both plants".
- Page 4-11, first bullet, sixth sentence: DELETE entire sentence.
- Page 4-11, second bullet, fourth sentence: DELETE entire sentence.
- Amendment 1, page 4, first bullet: DELETE "January 2001" and REPLACE with "July 7th, 2001".
- Amendment 1, page 4, first bullet: DELETE "2.4 mgd" and REPLACE with "3.75 mgd".
- Figure 5-1: DELETE "2.4 mgd" and REPLACE with "3.75 mgd".
- Figure 5-1: DELETE "0.9 mgd" and REPLACE with "1.24 mgd".

We are submitting this information for formal approval by the Department of Health Services (DHS) and the Regional Water Quality Control Board (RWQCB). We also request that DHS and the RWQCB acknowledge irrigation as an approved use of the recycled water produced at the RWF. Several small irrigation customers will be served from the RWF immediately, with other future connections for irrigation planned for the near future.

This Amendment was prepared for the District by the consulting firm Raines, Melton & Carella, Inc. (RMC). Questions regarding the Amendment or the original report should be addressed to me or to Marilyn Bailey of RMC at (925) 299-6733. We look forward to discussing the report and project with you at your convenience.

Sincerely,

Gregory G. Baatrup
Technical Services Manager

GGB:dcj

Attachments: Attachment A: Site General Arrangement (1 sheet)
Attachment B: Piping & Instrument Diagram – Circulating Water System (3 sheets)
Attachment C: Piping & Instrument Diagram – Auxiliary Cooling (1 sheet)
Attachment D: Preliminary Plant Water Balance
90°F Ambient With Steam Injection & Evaporative Cooling (1 sheet)
75°F Ambient With Steam Injection & Evaporative Cooling (1 sheet)
60°F Ambient With Steam Injection & Evaporative Cooling (1 sheet)
45°F Ambient With Steam Injection & Evaporative Cooling (1 sheet)
30°F Ambient With Steam Injection & Evaporative Cooling (1 sheet)
105°F Ambient With Steam Injection & Evaporative Cooling (1 sheet)
Attachment E: Reference Plot Plan
Attachment F: Process Flow Diagram Combined Cycle – Water Balance

cc: Project File No. 5010-03-04
Chron File

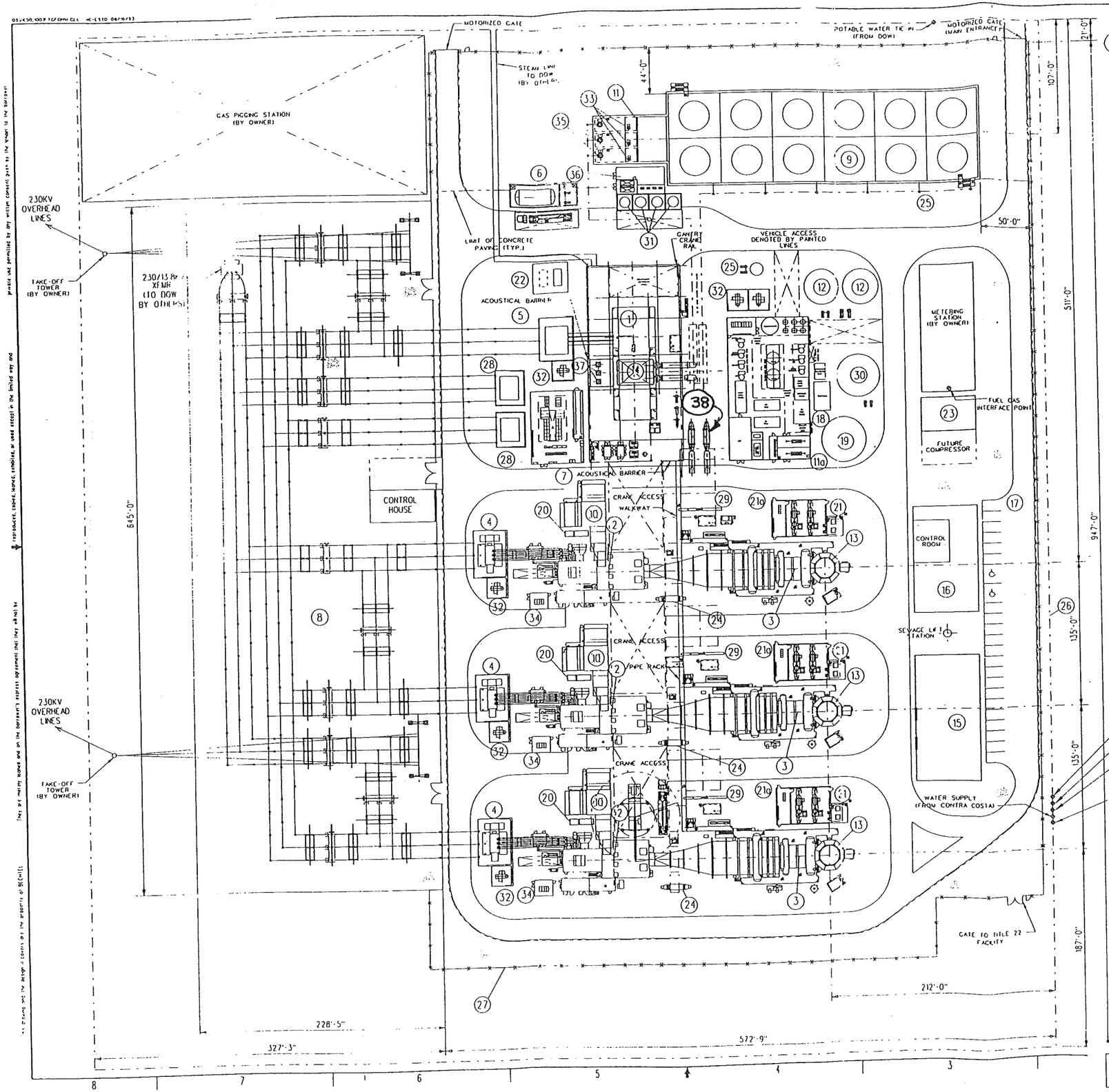

	STEAM TURBINE
	COMBUSTION TURBINE (BY OWNER)
3	H.R.S.G.
4	C.T. MAIN TRANSFORMER
5	S.T. MAIN TRANSFORMER
6	AMMONIA UNLOADING/STORAGE AREA
7	SWITCHGEAR BUILDING W/ BATTERY ROOM
8	SWITCHYARD
9	COOLING TOWER
10	C.T. AIR INLET FILTER (BY OWNER)
11	COOLING TOWER FOREBAY
11a	FIREWATER PUMPS
12	DEMINERALIZED WATER STORAGE TANKS
13	STACK
14	CONDENSER
15	WAREHOUSE / MAINTENANCE SHOP
16	ADMINISTRATION BUILDING W/CONTROL ROOM
17	PARKING
18	WATER TREATMENT BUILDING/LABORATORY
19	RAW/FIRE WATER STORAGE TANK
20	INLET AIR FOGGING SKID (BY OWNER)
21	CHEMICAL FEED AREA
21a	BOILER FEEDWATER PUMP BUILDING
22	STANDBY GENERATOR (NATURAL GAS)
23	FUEL GAS COMPRESSOR BUILDING
24	ROTOR AIR COOLER (BY OWNER)
25	POTABLE WATER TANK WITH PUMPS
26	PROPERTY BOUNDARY
27	FENCE
28	STATION SERVICE TRANSFORMERS
29	GAS SCRUBBER/HEATER STATION (BY OWNER)
30	CLARIFIER WITH BOOSTER PUMPS
31	SULFURIC ACID, SODIUM HYPOCHLORITE, DISPERANT & INHIBITOR TANKS
32	LOAD CENTER TRANSFORMERS
33	AUXILIARY COOLING WATER PUMPS
34	LOAD CENTER BUILDING
35	CIRCULATING WATER PUMPS
36	COOLING TOWER TREATMENT BUILDING
37	CONDENSATE PUMPS
38	AUX CCW HEAT EXCHANGERS

HEIGHTS OF VARIOUS COMPONENTS

HEIGHT	COMPONENTS
144'	HRSG STACK
78'	HRSG OPERATING/MAINTENANCE PLATFORM
42'	STG OPERATING DECK
57'	TOP STG GENERATOR COMPARTMENT
50'	COOLING TOWER OPERATING DECK
60'	COOLING TOWER FAN CONE EXIT
24'	DEMIN STORAGE TANK ROOF (2 TANKS)
40'	FIRE WATER TANK ROOF
18'	ADMIN BUILDING ROOF PEAK
28'	WAREHOUSE BUILDING ROOF PEAK
28'	WATER TREATMENT BUILDING ROOF PEAK (MAY HAVE 2 PENTHOUSES OF SMALL AREA FOR DECARBONATORS EXTENDING TO 33')
50'	AA-FRAMES HORIZONTAL STEEL
60'	AA-FRAMES PEAK
105'	TRANSMISSION TOWERS

NOTE: SITE AREA - 900' X 968' - 871200 SQ.FT. - 20 ACRES

0 30 60 90 120FT

D	02/15/00	ISSUED FOR SCOPE BOOK	RPS	—	JVC	—	FR	—
C	02/14/00	ISSUED FOR SCOPE BOOK	RPS	—	JVC	—	JSP	—
B	02/13/00	ISSUED FOR SCOPE BOOK	RPS	—	JVC	—	JSP	—
A	02/10/00	ISSUED FOR SCOPE BOOK	RPS	—	JVC	—	JSP	—
No.	Date	Revisions	Drawn	Chk'd	Appd	Appd	Appd	Appd

SCALE 1" = 30'-0" DATE 02/14/00 DRAWN JVC

BECHTEL
FREDERICK, MARYLAND

CALPINE/BECHTEL ENTERPRISES
DELTA ENERGY CENTER

SITE GENERAL ARRANGEMENT

JOB NO	DRAWING NO	REV

ATTACHMENT A
DEC SITE GENERAL ARRANGEMENT

This drawing and the design it covers are the property of BECHTEL. They are merely loaned and on the borrower's express agreement that they will not be reproduced, copied, loaned, exhibited, or used except in the limited way and private use permited by any written consentgiven by the lender to the borrower.

TABLE A

DESCRIPTION	0-MP-WL001A	0-MP-WL001B	0-MP-WL001C
DRIVING END BRG TEMP	TE-601A, TI-601A	TE-601B, TI-601B	TE-601C, TI-601C
NON-DRIVING END BRG TEMP	TE-602A, TI-602A	TE-602B, TI-602B	TE-602C, TI-602C
WINDING TEMP	TE-603A	TE-603B	TE-603C
WINDING TEMP	TE-604A	TE-604B	TE-604C
WINDING TEMP	TE-605A	TE-605B	TE-605C
WINDING TEMP	TE-606A	TE-606B	TE-606C
WINDING TEMP	TE-607A	TE-607B	TE-607C
WINDING TEMP	TE-608A	TE-608B	TE-608C

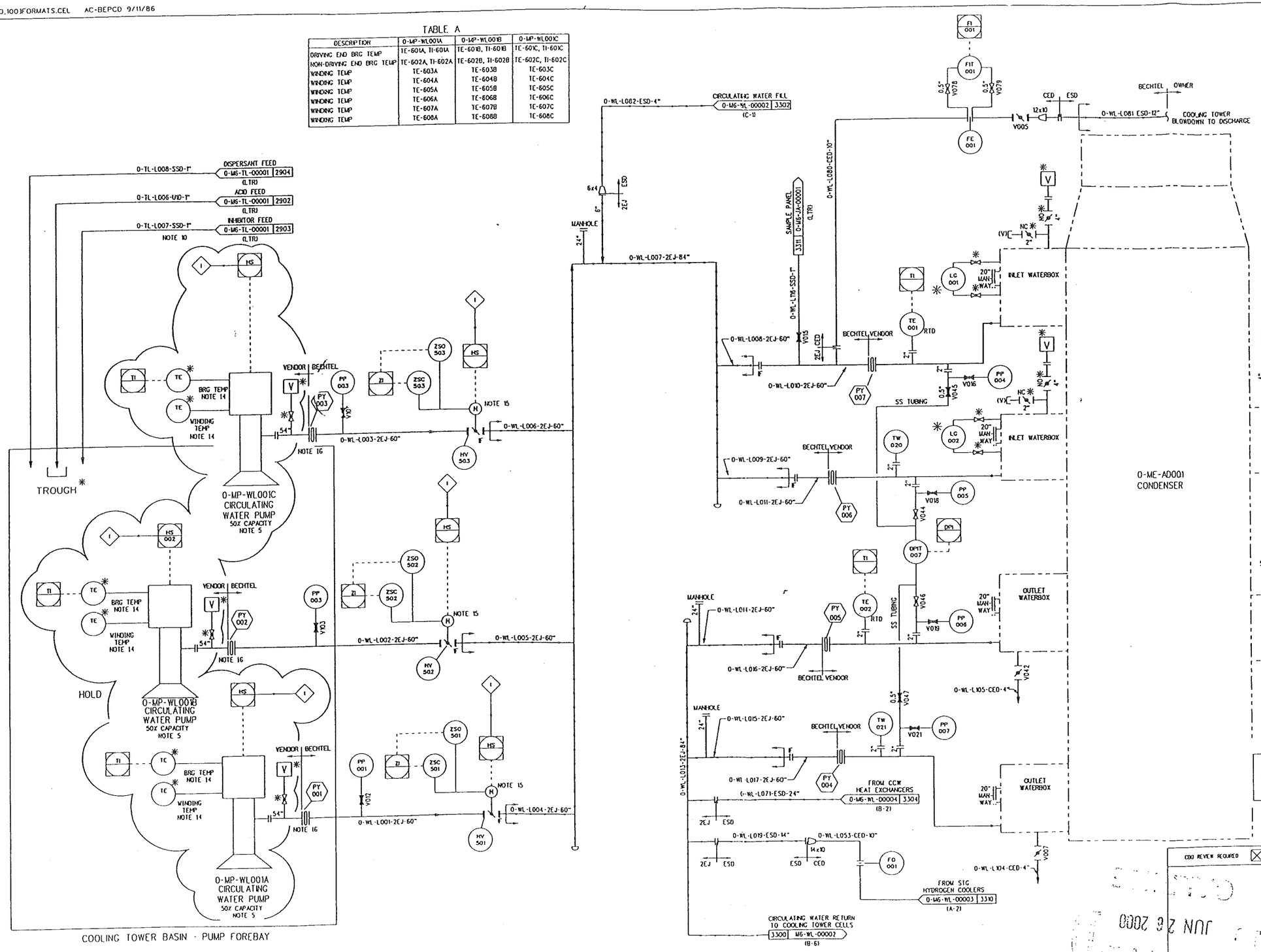

NOTES:

1. FOR SYMBOLS AND LEGENDS SEE DRAWINGS 0-M6-YZ-00001 THROUGH -00005.
2. UNLESS OTHERWISE NOTED THIS DRAWING IS IDENTICAL FOR EACH OF THE UNITS. UNIT 1 EQUIPMENT, PIPING, VALVE, AND INSTRUMENT NUMBERS ARE PREFIXED WITH A "1-WL", UNIT 2 WITH A "2-WL", AND UNIT 3 WITH A "3-WL". ITEMS WHICH ARE COMMON TO ALL THREE UNITS ARE PREFIXED BY "0-WL".
3. ✻ SYMBOL INDICATES EQUIPMENT SUPPLIED BY VENDOR.
4. ALL INSTRUMENT ROOT VALVES ARE 0.5", VENTS ARE 0.75", AND DRAINS ARE 1.0", UNLESS NOTED OTHERWISE.
5. REFER TO VENDOR DWG. NO. "LATER".
6. REFER TO VENDOR DWG. NO. "LATER".
7. REFER TO VENDOR DWG. NO. "LATER".
8. REFER TO VENDOR DWG. NO. "LATER".
9. REFER TO VENDOR DWG. NO. "24196-000-V01-WUSC-00030"
10. THE DISCHARGE POINT SHALL BE LOCATED AT LEAST 48" AWAY FROM THE COOLING WATER DISPERSANT INJECTION POINT.
11. TWO SEPARATE INJECTION POINTS SHALL BE LOCATED BELOW THE LOW BASIN WATER LEVEL AT THE BASIN WALL FARTHEST FROM THE CIRCULATING WATER PUMP SUCTION BAY. THE INJECTION POINTS SHOULD BE LOCATED AT APPROXIMATELY 25% OF THE BASIN WALL LENGTH AWAY FROM THE NEAREST CORNER.
12. SUITABLE SUPPORT FOR A FLANGED TOP MOUNTED LEVEL INSTRUMENT SHALL BE PROVIDED REFER TO DWG. NO. (LATER).
13. EXTEND THE SODIUM HYPOCHLORITE INJECTION LINE TO WITHIN 6" OF THE BOTTOM OF THE BASIN FLOOR. CAP THE END OF THE PIPE. FIELD TO DRILL (LTR) HOLES EVENLY SPACED BELOW THE MIN. WATER LEVEL.
14. SEE "TABLE A" ON THIS DWG.
15. BUTTERFLY VALVE TO BE SUITABLE FOR THROTTLING.
16. EXPANSION JOINT IS NON-METALLIC AND REDUCING TYPE.

ATTACHMENT B
DEC – P&ID
CIRCULATING WATER SYSTEM (1 OF 3)

NO	DATE	REVISIONS	BY	CHK	ENGR SUPV	CS SUPV	PROJ ENGR
0	06/20/00	ISSUED FOR CONSTRUCTION OF UNDERGROUND PIPING ONLY	AM	PTS CS	DCD	AM	JF

SCALE | DESIGNED | DRAWN | CHIEF ENGR

CDO REVIEW REQUIRED ☒

EXPIRATION DATE

JUN 26 2000

BECHTEL POWER CORP.
FREDERICK, MARYLAND

CALPINE/BECHTEL ENTERPRISES
DELTA ENERGY CENTER
880 MW COMBINED CYCLE

PIPING & INSTRUMENT DIAGRAM
CIRCULATING WATER SYSTEM

JOB NO	DRAWING NO	REV
24473	0-M6-WL-00001	0

OS2-(50,100)FORMATS.CEL AC-BEPCD 9/11/86

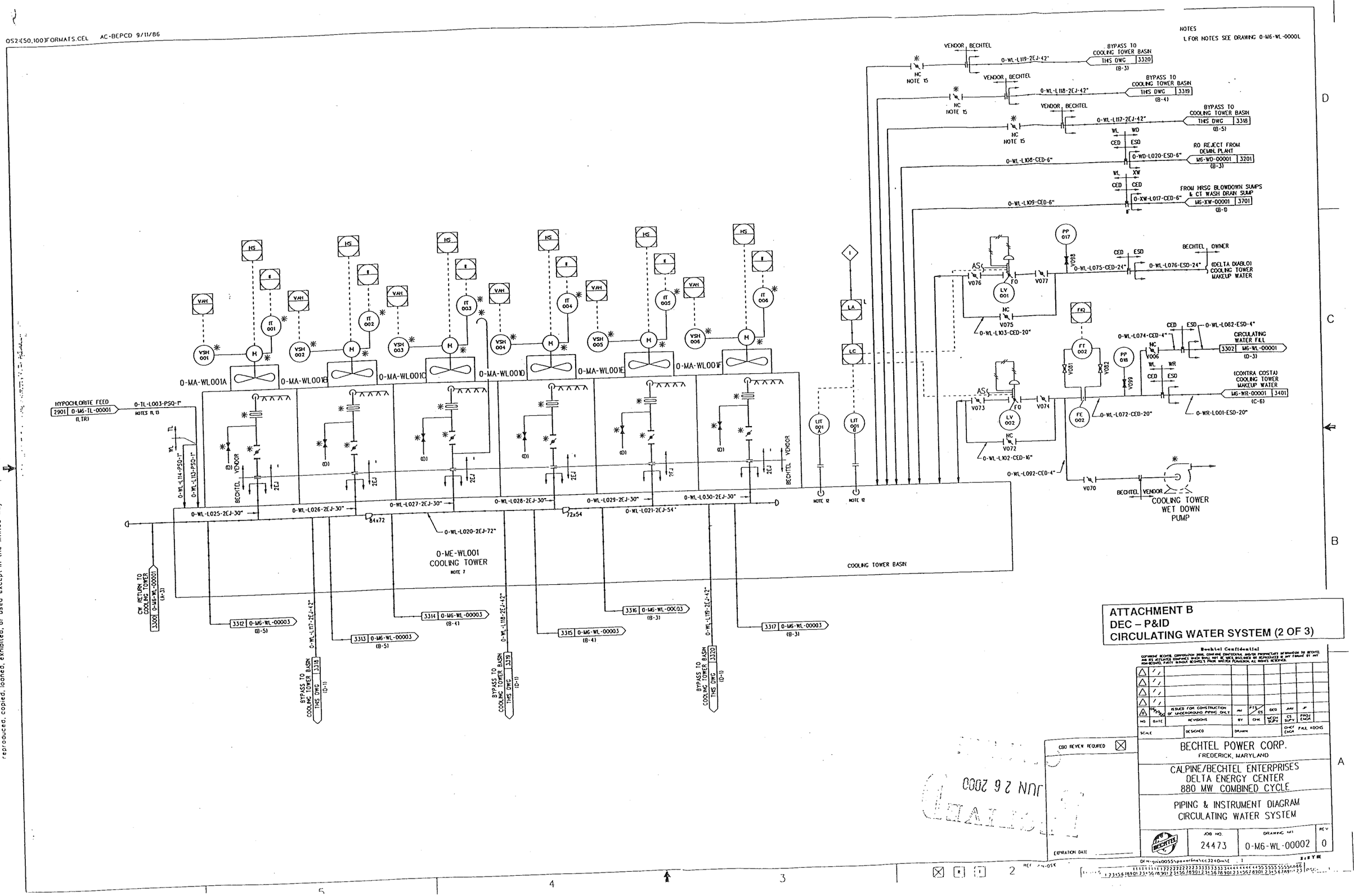

This drawing and the design it covers are the property of BECHTEL. They are merely loaned and on the borrower's express agreement that they will not be reproduced, copied, loaned, exhibited, or used except in the limited way and private use permitted by any written consent given by the lender to the borrower.

OS2:(50,100)FORMATS.CEL AC-BEPCD 9/11/86

This drawing and the design it covers are the property of BECHTEL. They are merely loaned and on the borrower's express agreement that they will not be reproduced, copied, loaned, exhibited, or used except in the limited way and private use permitted by any written consentgiven by the lender to the borrower.

NOTES:
1. FOR NOTES, SEE DRAWING 0-M6-WL-00001.

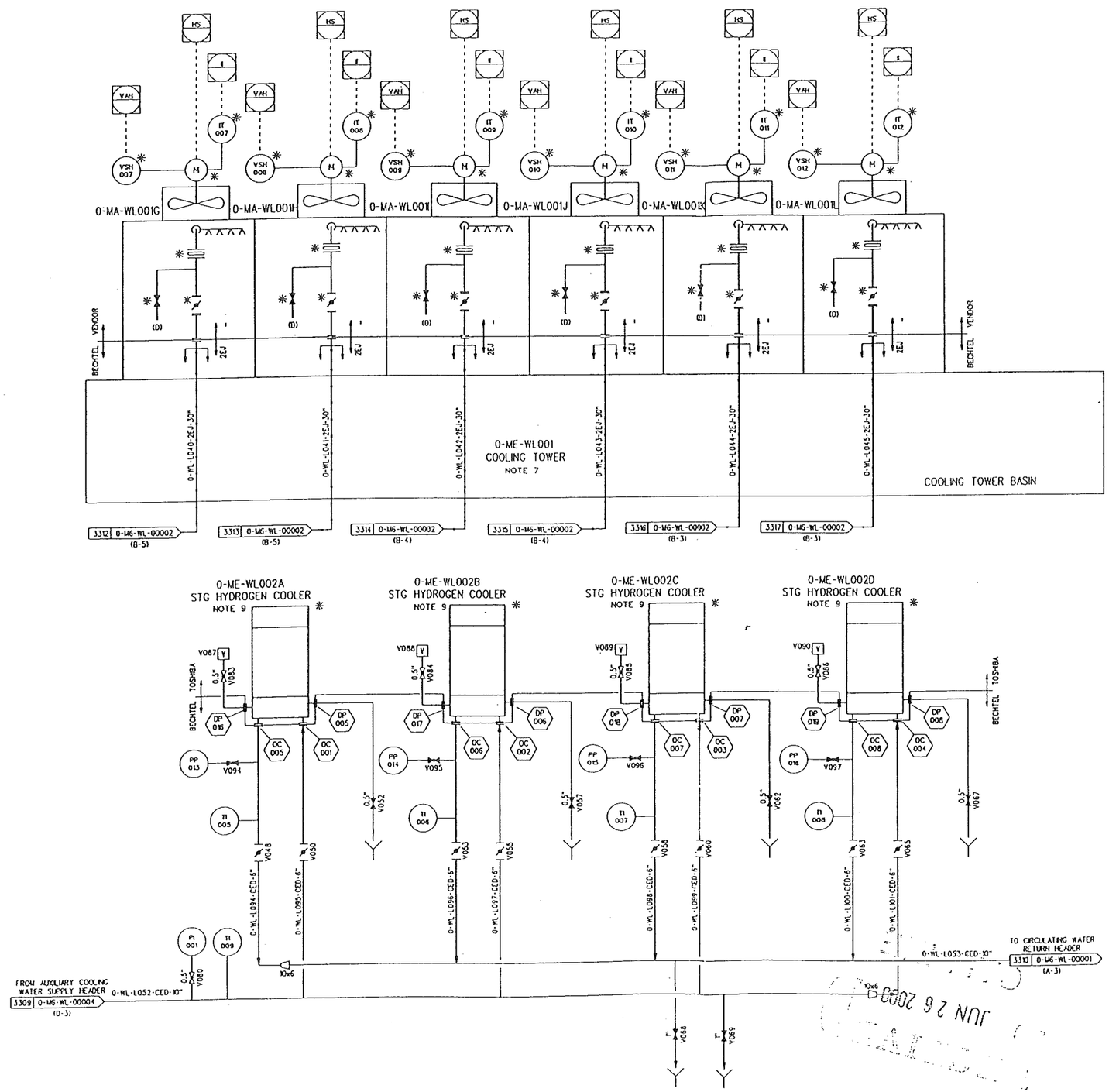

ATTACHMENT B
DEC – P&ID
CIRCULATING WATER SYSTEM (3 OF 3)

Bechtel Confidential

NO	DATE	REVISIONS	BY	CHK	MECH SUPV	CS SUPV	PROJ ENGR
0	06/20/00	ISSUED FOR CONSTRUCTION OF UNDERGROUND PIPING ONLY	AM	PTS/CS	DCD	JAM	JP

SCALE | DESIGNED | DRAWN | CHK'F ENGR PAUL KOCHS

CBO REVIEW REQUIRED

BECHTEL POWER CORP.
FREDERICK, MARYLAND

CALPINE/BECHTEL ENTERPRISES
DELTA ENERGY CENTER
880 MW COMBINED CYCLE

PIPING & INSTRUMENT DIAGRAM
CIRCULATING WATER SYSTEM

EXPIRATION DATE

JOB NO	DRAWING NO	REV
24473	0-M6-WL-00003	0

This drawing and the design it covers are the property of BECHTEL. They are merely loaned and on the borrower's express agreement that they will not be reproduced, copied, loaned, exhibited, or used except in the limited way and private use permitted by any written consent given by the lender to the borrower.

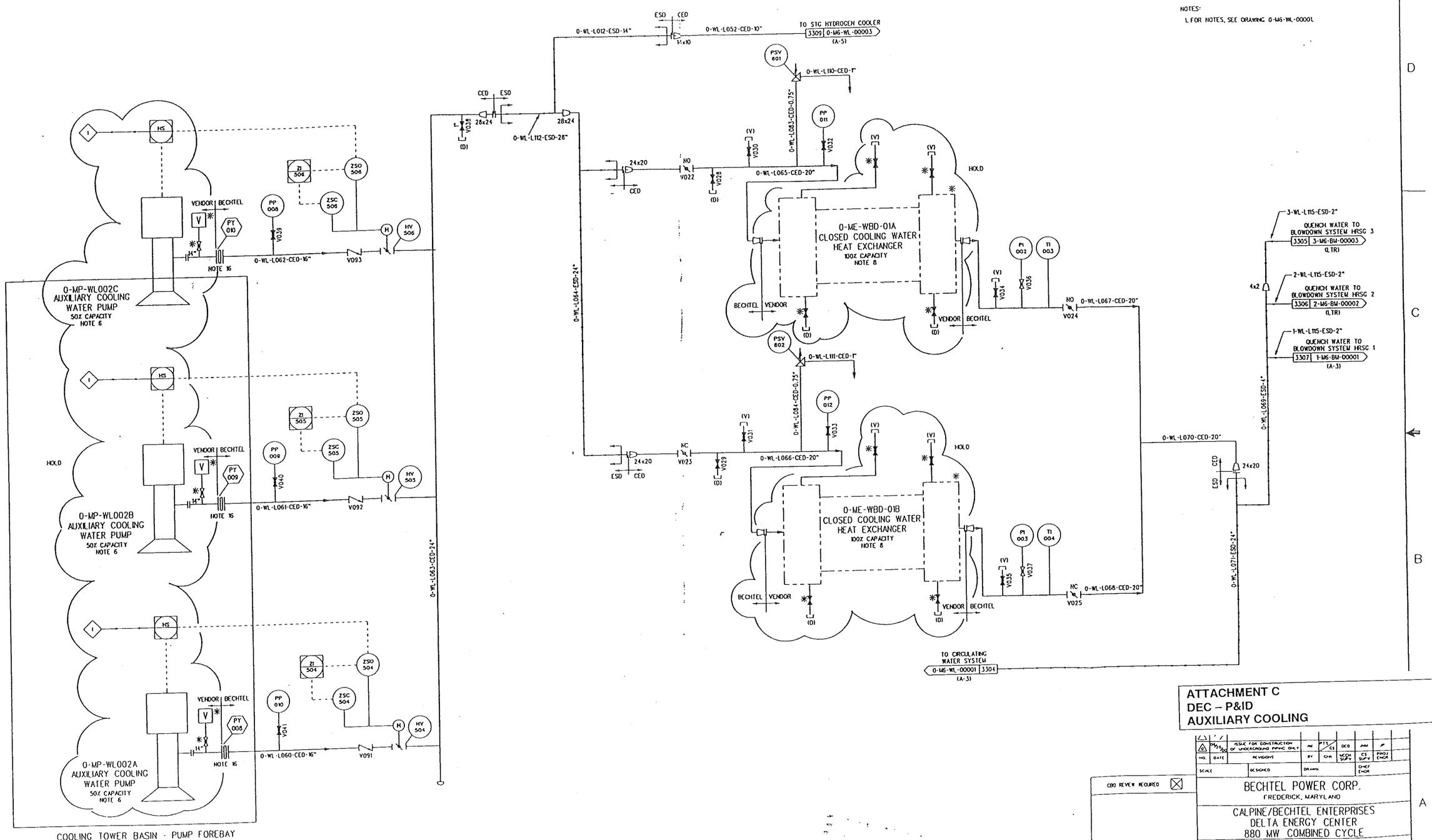

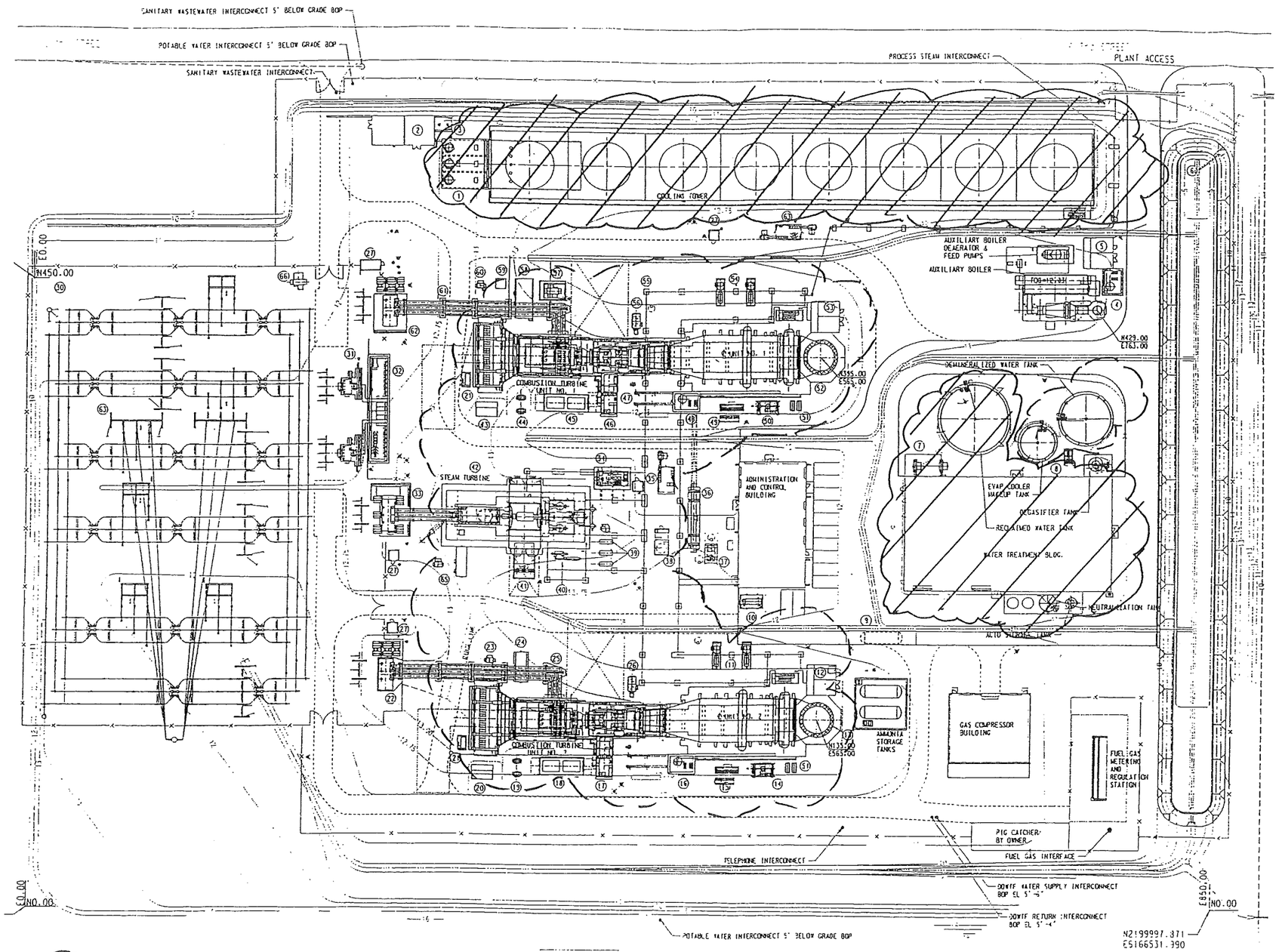

1. CIRCULATING PUMPS
2. FIRE PUMP BUILDING
3. COOLING TOWER BLOWDOWN WASTE WATER PUMPS
4. AUXILIARY BOILER INTERMITTENT BLOWDOWN TANK
5. AUXILIARY BOILER SAMPLE ANALYSIS PANEL
6. RETENTION POND
7. STATION SERVICE TRANSFORMERS
8. DOW CONDENSATE RETURN HEAT EXCHANGERS
9. AMMONIA UNLOADING AREA
10. EMERGENCY DIESEL GENERATOR
11. HRSG 2 BOILER FEED PUMPS
12. HRSG 2 CEMS/SAMPLING BUILDING
13. HRSG 2 STACK
14. UNIT 2 SCR SKID AND AQUEOUS AMMONIA VAPORIZER
15. DUCT BURNER SKID
16. HRSG 2 INTERMITTENT BLOWDOWN TANK AND PUMPS
17. ACCESSORY MODULE
18. PACKED ELECTRICAL CONTROL CENTER
19. PAD MOUNT TRANSFORMERS
20. HYDROGEN STORAGE
21. AIR PROCESS SKID
22. CTG2 STEP-UP TRANSFORMER
23. EXCITATION TRANSFORMER
24. BUS ACCESSORY COMPARTMENT
25. ISO PHASE BUS
26. CTG #2 CO2 FIRE PROTECTION SYSTEMS
27. FIRE WATER VALVE HOUSE
28. NOT USED
29. NOT USED
30. 115KV PLANT SWITCHYARD
31. CTG2 AUXILIARY TRANSFORMER
32. SKV POWER HOUSE & SWITCHYARD CONTROL BUILDING
33. STEAM GENERATOR STEP-UP TRANSFORMER
34. LUBE OIL MODULE
35. STEAM TURBINE DCS
36. AUXILIARTY COOLING WATER HEAT EXCHANGER
37. OIL / WATER SEPARATOR
38. WATER WASH UNIT
39. AUXILIARY COOLING WATER PUMPS
40. CONDENSER AIR REMOVAL SKID / QUAD STEAM CONDENSER
41. CONDENSATE PUMPS
42. STEAM TURBINE
43. HYDROGEN STORAGE
44. PAD MOUNT TRANSFORMERS
45. PACKED ELECTRICAL CONTROL CENTER
46. ACCESSORY MODULE
47. FUEL GAS HEATERS
48. HRSG 1 INTERMITTENT BLOWDOWN TANK AND PUMPS
49. DUCT BURNER SKID
50. UNIT 1 SCR SKID AND AQUEOUS AMMONIA VAPORIZER
51. FEED WATER PREHEATER PUMPS
52. HRSG 1 STACK
53. HRSG 1 CEMS/SAMPLING BUILDING
54. HRSG 1 BOILER FEED PUMPS
55. PIPE RACK
56. HRSG 1 CO2 FIRE PROTECTION SYSTEM
57. ISOLATION TRANSFORMER
58. BUS ACCESSORY COMPARTMENT
59. DC LINK REACTOR
60. EXCITATION TRANSFORMER
61. ISO PHASE BUS BENT
62. CTG2 STEP-UP TRANSFORMER
63. COOLING TOWER DCS
64. NOT USED
65. DOW CONDENSATE FILTER SKID
66. EMERGNCY TRANSFORMER
67. NOT USED
68. NOT USED
69. NOT USED
70. NOT USED

RECLAIMED WATER

TREATED RECLAIMED WATER

PREVAILING WIND DIRECTION FROM THE WEST.

SCALE 1" = 50'-0"

UNCONTROLLED

PRELIMINARY

RECEIVED MAY 16 2000 Klewit Industrial Co.

KIEWIT INDUSTRIAL CO.

LOS MEDANOS ENERGY CENTER
PITTSBURG, CALIFORNIA

BIBB and Associates
Engineers & Architects & Consultants
5730 Antioch Road
Shawnee Mission KS 66204-1

REFERENCE PLOT PLAN

ATTACHMENT E
LMEC REFERENCE PLOT PLAN

NOTE:
1. COOLING , R BLOWDOWN IS BASED ON THREE CYCLES OF CONCENTRATION PLUS THE RO REJECT STREAM.
2. FLOWS ARE INDICATED IN GALLONS PER MINUTE (GPM).

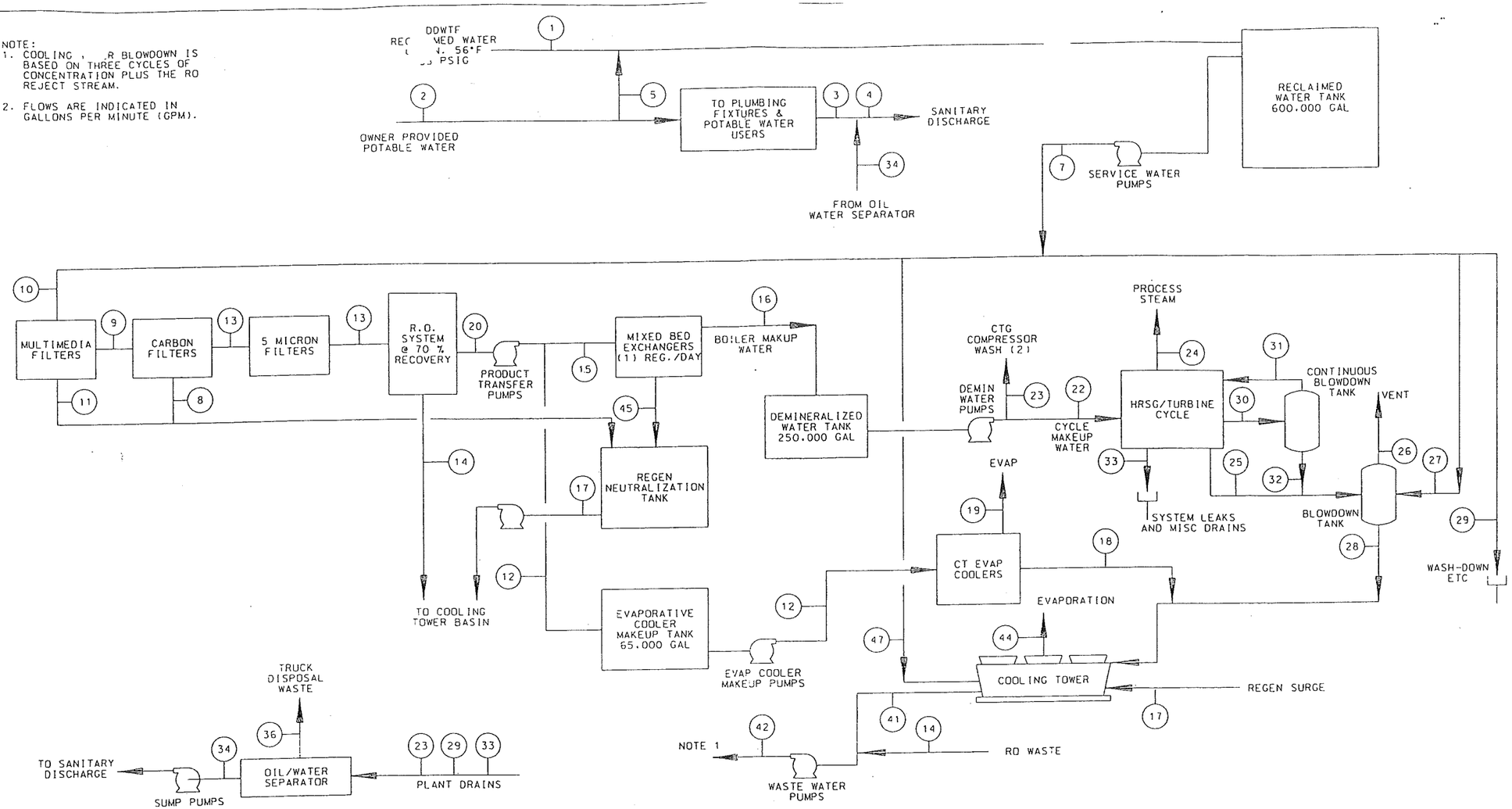

STREAM NO.	1	2	3	4	5	7	8	9	10	11	12	13	14	15	16	17	18	19	20	22	23	24	25	26	27	28	29	30	31	32	33	34	36	41	42	44	45	47
STREAM NAME	TOTAL MAKEUP WATER	POTABLE WATER	POTABLE WATER USE	SANITARY DISCHARGE	POTABLE WATER BACKUP TO RECLAIMED WATER	SERVICE WATER	CARBON FILTER BACKWASH	FILTERED WATER TO CARBON FILTERS	SERVICE WATER TO MULTIMEDIA FILTERS	MULTIMEDIA FILTER BACKWASH	R.O. PRODUCT TO EVAPORATIVE COOLERS	MAKEUP WATER TO R.O. SYSTEM	R.O. WASTE	R.O. PRODUCT TO MIXED BED EXCHANGERS	BOILER MAKEUP WATER	NEUTRALIZATION TANK TO COOLING TOWER	EVAPORATIVE COOLER WASTE	CT EVAPORATIVE COOLER EVAPORATION	R.O. PRODUCT	CYCLE MAKEUP WATER	CTG COMPRESSOR WASH (2)	TO PROCESS STEAM	INTERMITTENT BLOWDOWN	BLOWDOWN TANK VENT	SERVICE WATER TO BLOWDOWN TANK	BLOWDOWN TANK DRAIN	MISC. SERVICE WATER INC. WASH DOWN	CONTINUOUS BLOWDOWN	CONTINUOUS BLOWDOWN TANK FLASH STEAM	CONTINUOUS BLOWDOWN TANK DRAIN	MISCELLANEOUS SYSTEM LEAKS AND DRAINS	OIL/WATER SEPARATOR WATER PRODUCT	OILY WASTE	COOLING TOWER BLOWDOWN	WASTE WATER DISCHARGE	COOLING TOWER DRIFT AND EVAPORATION	MIXED BED EXCHANGER WASTE	COOLING WATER MAKEUP WATER
CASE NO.1 75K pph EXPORT	2608.2	0.7	0.7	4.4	0.0	2608.2	2.3	271.5	273.8	2.3	28.9	269.2	80.8	159.5	155.5	8.6	2.9	26.0	188.4	154.5	1.0	150.0	0.0	0.2	2.4	4.7	0.7	3.0	0.5	2.5	2.0	3.7	0.0	782.5	863.3	1565.0	4.0	2331.3
CASE NO.1 200K pph EXPORT	2760.3	0.7	0.7	4.4	0.0	2760.3	2.3	644.0	646.3	2.3	28.9	641.7	192.5	420.3	409.7	15.3	2.9	26.0	449.2	408.7	1.0	400.0	0.0	0.5	6.3	12.5	0.7	8.0	1.3	6.7	2.0	3.7	0.0	712.5	905.0	1425.0	10.7	2106.9
CASE NO.5 75K pph EXPORT	3994.0	0.7	0.7	4.4	0.0	3994.0	2.3	354.7	357.0	2.3	82.2	352.4	105.7	164.5	160.3	8.8	8.2	74.0	246.7	159.3	1.0	150.0	0.0	0.6	6.9	13.6	0.7	8.8	1.5	7.3	2.0	3.7	0.0	1220.0	1325.7	2440.0	4.2	3629.4
CASE NO.5 200K pph EXPORT	4085.8	0.7	0.7	4.4	0.0	4085.8	2.3	739.0	741.3	2.3	82.2	736.7	221.0	433.5	422.5	15.6	8.2	74.0	515.7	421.5	1.0	400.0	0.0	1.6	18.4	36.4	0.7	23.4	3.9	19.5	2.0	3.7	0.0	1128.5	1349.5	2257.0	11.0	3325.3

FILE NAME: 9067WB01.DGN

C	ISSUED FOR REVIEW	WFK	12-15-99
B	ISSUED FOR REVIEW	DAD	12-07-99
A	ISSUED FOR PROPOSAL	DAD	09-15-99

PROCESS FLOW DIAGRAM
COMBINED CYCLE - WATER BALANCE
GE PG7241 (FA)

KRK	09-10-99
DAD	09-10-99
JRM	12-07-99
DHL	12-07-99

99-067-1-WB-001 C

ATTACHMENT F
LMEC PROCESS FLOW DIAGRAM

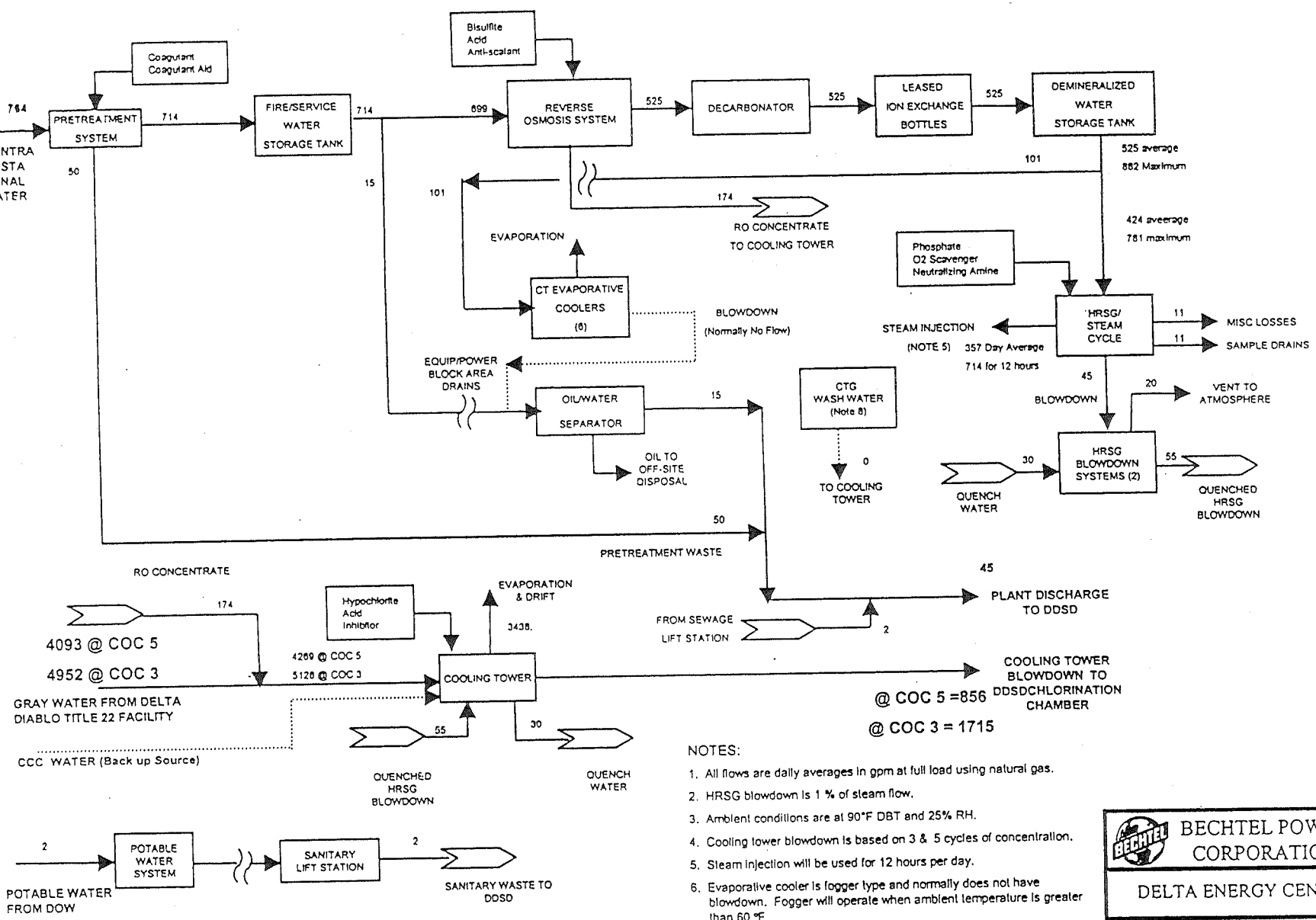

90°F AMBIENT WITH STEAM INJECTION & EVAPORATIVE COOLING
COOLING TOWER: 3 & 5 CYCLES OF CONCENTRATION

NOTES:

1. All flows are daily averages in gpm at full load using natural gas.
2. HRSG blowdown is 1 % of steam flow.
3. Ambient conditions are at 90°F DBT and 25% RH.
4. Cooling tower blowdown is based on 3 & 5 cycles of concentration.
5. Steam injection will be used for 12 hours per day.
6. Evaporative cooler is fogger type and normally does not have blowdown. Fogger will operate when ambient temperature is greater than 60 °F
7. DDSD water will be pretreated by the Sanitation District for TSS, and bacteria reduction to meet California Title 22 requirements
8. CTG wash water will be collected and pumped to the cooling tower.

BECHTEL POWER CORPORATION

DELTA ENERGY CENTER

Preliminary Plant Water Balance

JOB NO.	APPENDIX	REV.
24196	H - I	E

ATTACHMENT D
DEC PLANT WATER BALANCE
(1 OF 6)

R:\CALPINE - DEC\PITT_WB_C.PPT

4/12/00

ATTACHMENT D
DEC PLANT WATER BALANCE
(2 OF 6)

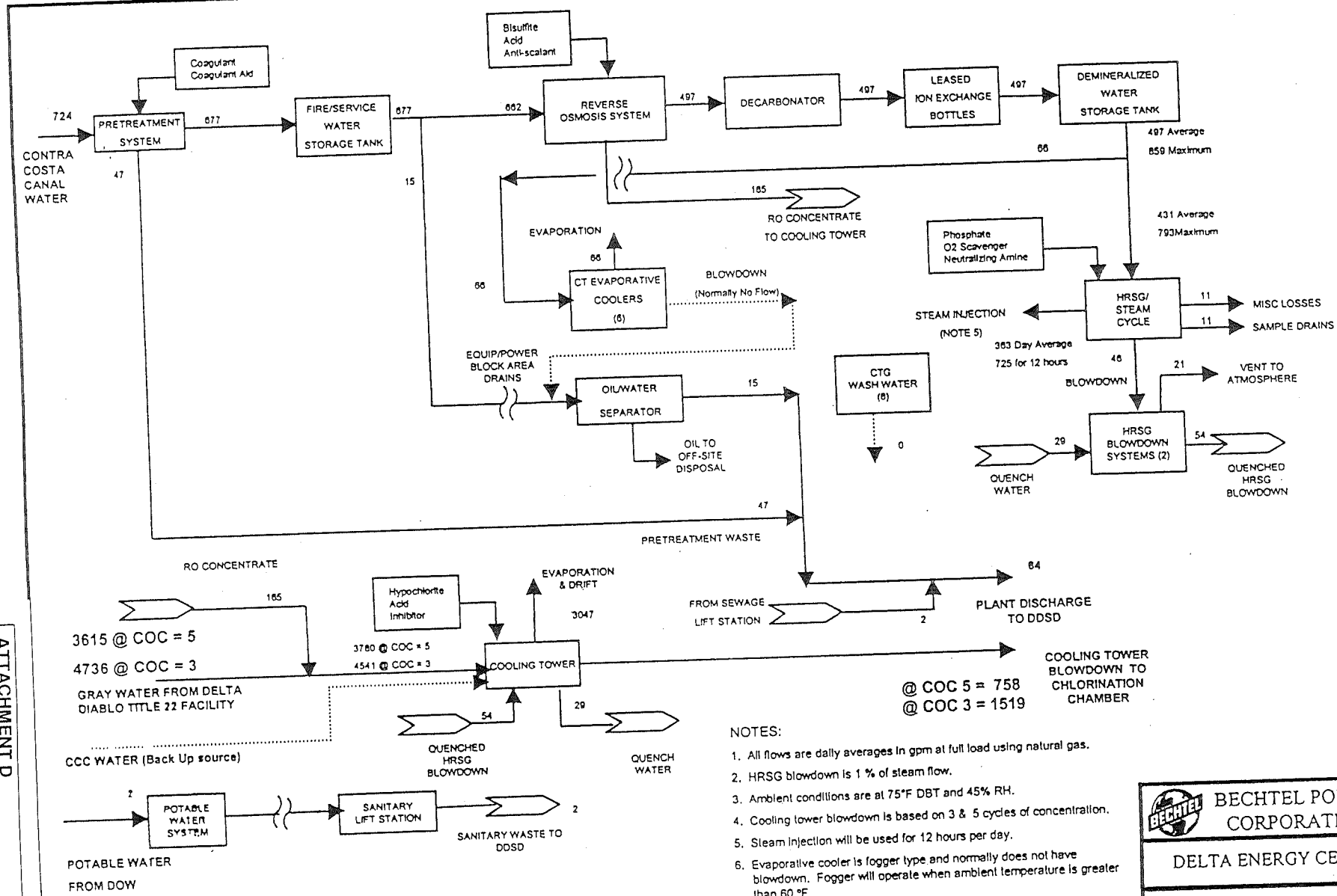

NOTES:

1. All flows are daily averages in gpm at full load using natural gas.
2. HRSG blowdown is 1 % of steam flow.
3. Ambient conditions are at 75°F DBT and 45% RH.
4. Cooling tower blowdown is based on 3 & 5 cycles of concentration.
5. Steam injection will be used for 12 hours per day.
6. Evaporative cooler is fogger type and normally does not have blowdown. Fogger will operate when ambient temperature is greater than 60 °F
7. DDSD water will be pretreated by the Sanitation District for TSS, and bacteria reduction to meet California Title 22 requirements.
8. CTG wash water will be collected and pumped to the cooling tower.

75°F AMBIENT WITH STEAM INJECTION & EVAPORATIVE COOLING
COOLING TOWER: 3 & 5 CYCLES OF CONCENTRATION

BECHTEL POWER CORPORATION

DELTA ENERGY CENTER

Preliminary Plant Water Balance

JOB NO.	APPENDIX	REV.
24196	H - 2	E

4/12/00

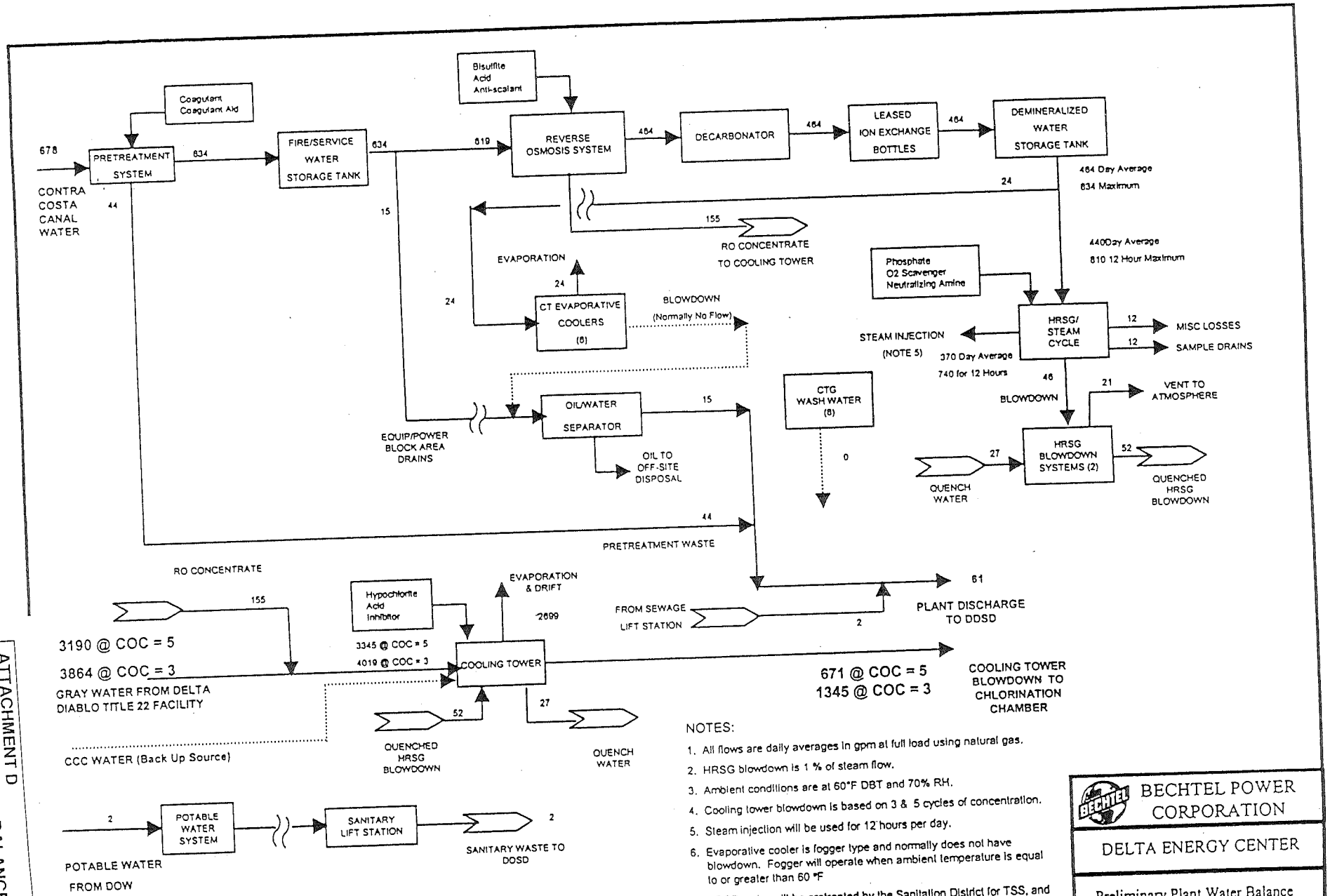

60°F AMBIENT WITH STEAM INJECTION & EVAPORATIVE COOLING COOLING TOWER: 3 & 5 CYCLES OF CONCENTRATION

NOTES:

1. All flows are daily averages in gpm at full load using natural gas.
2. HRSG blowdown is 1 % of steam flow.
3. Ambient conditions are at 60°F DBT and 70% RH.
4. Cooling tower blowdown is based on 3 & 5 cycles of concentration.
5. Steam injection will be used for 12 hours per day.
6. Evaporative cooler is fogger type and normally does not have blowdown. Fogger will operate when ambient temperature is equal to or greater than 60 °F
7. DDSD water will be pretreated by the Sanitation District for TSS, and bacteria reduction to meet California Title 22 requirements.
8. CTG wash water will be collected and pumped to the cooling tower.

BECHTEL POWER CORPORATION

DELTA ENERGY CENTER

Preliminary Plant Water Balance

JOB NO.	APPENDIX	REV.
24196	H - 3	E

4/12/00

ATTACHMENT D
DEC PLANT WATER BALANCE
(3 OF 6)

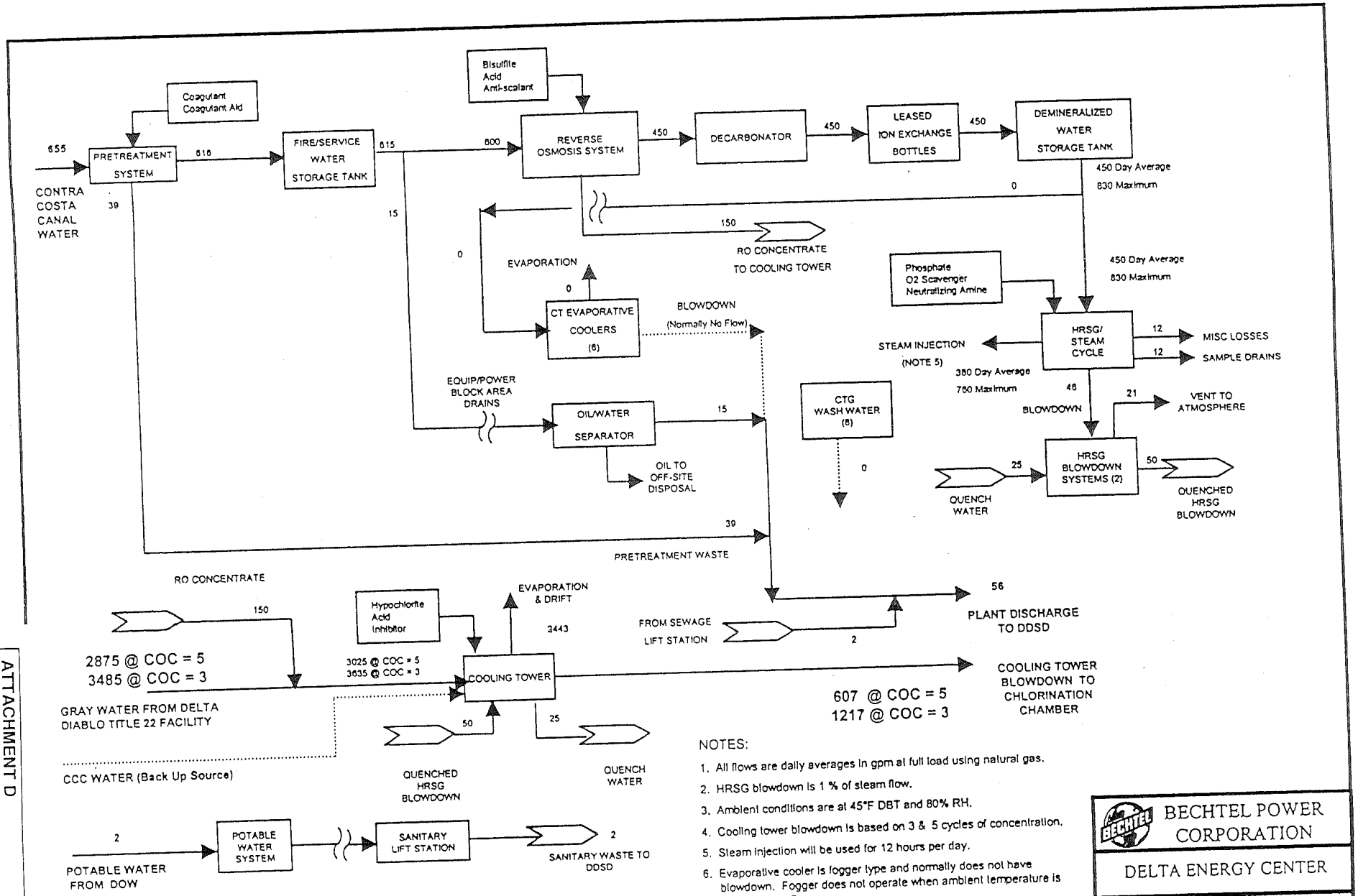

45°F AMBIENT WITH STEAM INJECTION
COOLING TOWER: 3 & 5 CYCLES OF CONCENTRATION

NOTES:

1. All flows are daily averages in gpm at full load using natural gas.
2. HRSG blowdown is 1 % of steam flow.
3. Ambient conditions are at 45°F DBT and 80% RH.
4. Cooling tower blowdown is based on 3 & 5 cycles of concentration.
5. Steam injection will be used for 12 hours per day.
6. Evaporative cooler is fogger type and normally does not have blowdown. Fogger does not operate when ambient temperature is less than 60 °F
7. DDSD water will be pretreated by the Sanitation District for TSS and bacteria reduction to meet California Title 22 requirements.
8. CTG wash water will be collected and pumped to the cooling tower.

BECHTEL POWER CORPORATION

DELTA ENERGY CENTER

Preliminary Plant Water Balance

JOB NO.	APPENDIX	REV.
24196	H - 4	E

4/12/00

ATTACHMENT D
DEC PLANT WATER BALANCE
(4 OF 6)

:\CALPINE - DEC\PITT_WB_C.PPT

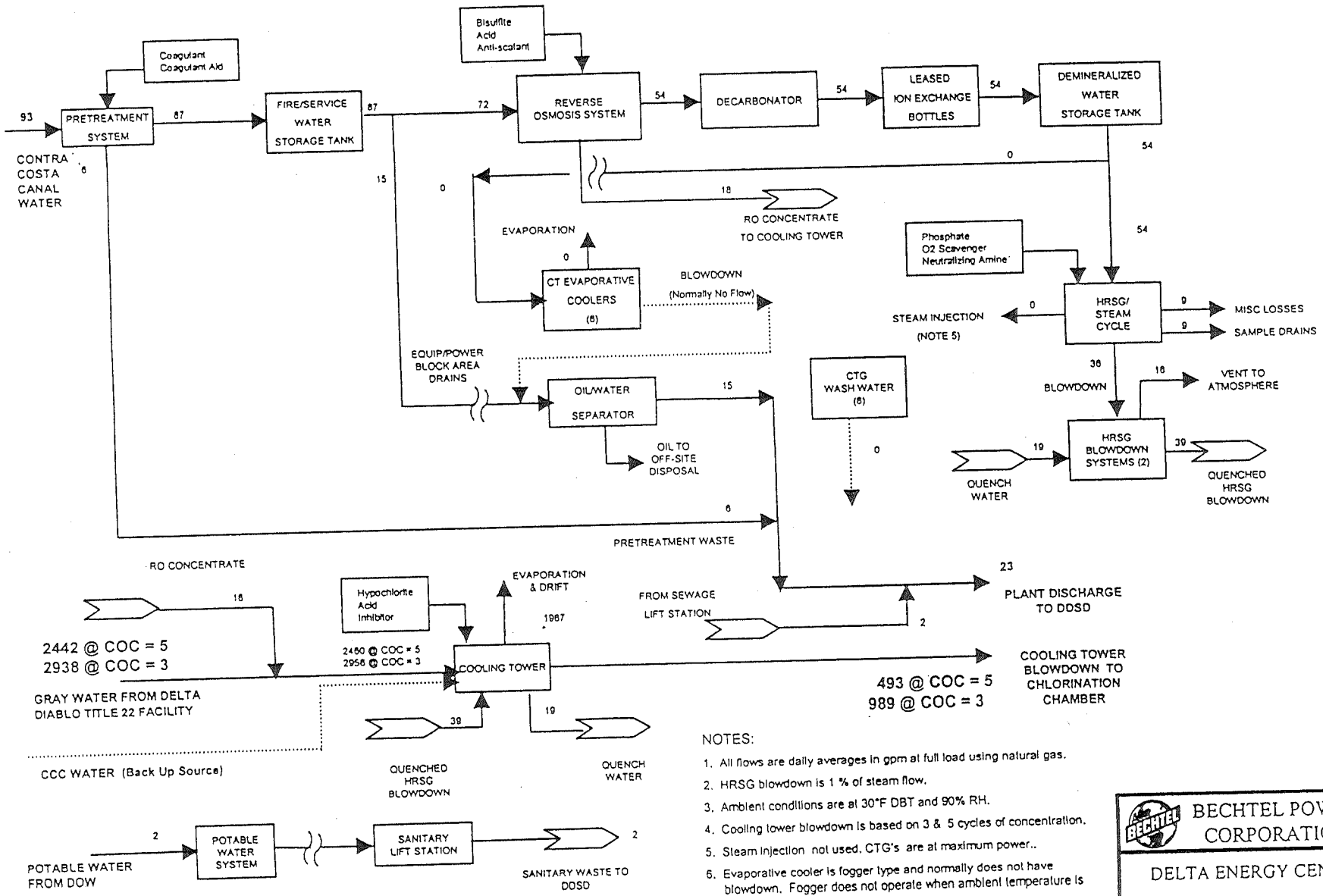

30°F AMBIENT WITHOUT STEAM INJECTION
COOLING TOWER: 3 & 5 CYCLES OF CONCENTRATION

NOTES:

1. All flows are daily averages in gpm at full load using natural gas.
2. HRSG blowdown is 1 % of steam flow.
3. Ambient conditions are at 30°F DBT and 90% RH.
4. Cooling tower blowdown is based on 3 & 5 cycles of concentration.
5. Steam injection not used. CTG's are at maximum power..
6. Evaporative cooler is fogger type and normally does not have blowdown. Fogger does not operate when ambient temperature is less than 60 °F
7. DDSD water will be pretreated by the Sanitation District for TSS and bacteria reduction to meet California Title 22 requirements.
8. CTG wash water will be collected and pumped to the cooling tower.

BECHTEL POWER CORPORATION

DELTA ENERGY CENTER

Preliminary Plant Water Balance

JOB NO.	APPENDIX	REV.
24196	H - 5	E

4/12/00

ATTACHMENT D
DEC PLANT WATER BALANCE
(5 OF 6)

R:\CALPINE - DEC\PITT_WB_C.PPT

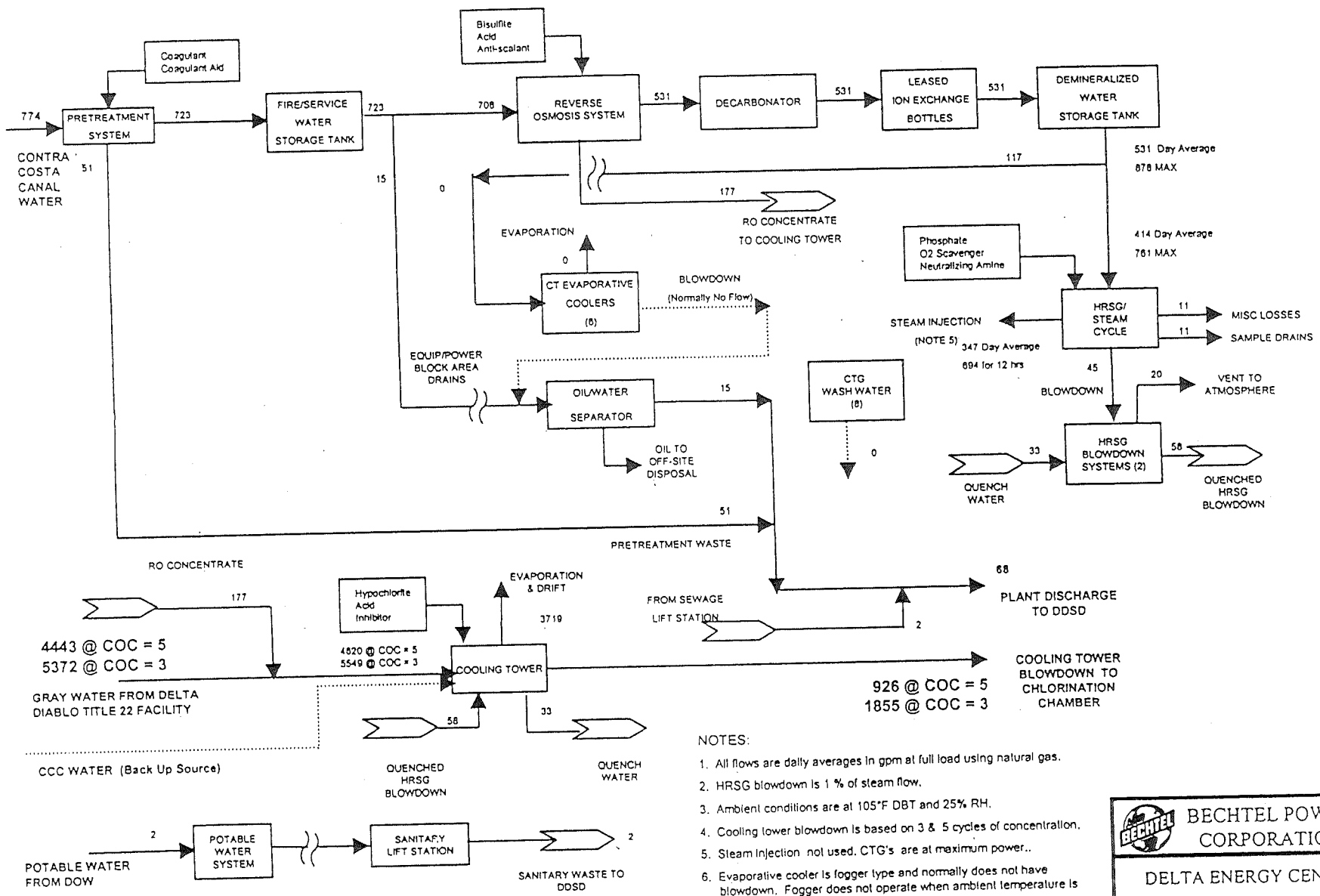

105°F AMBIENT WITH STEAM INJECTION
COOLING TOWER: 3 & 5 CYCLES OF CONCENTRATION

NOTES:

1. All flows are daily averages in gpm at full load using natural gas.
2. HRSG blowdown is 1 % of steam flow.
3. Ambient conditions are at 105°F DBT and 25% RH.
4. Cooling tower blowdown is based on 3 & 5 cycles of concentration.
5. Steam injection not used. CTG's are at maximum power..
6. Evaporative cooler is fogger type and normally does not have blowdown. Fogger does not operate when ambient temperature is less than 60 °F
7. DDSD water will be pretreated by the Sanitation District for TSS and bacteria reduction to meet California Title 22 requirements.
8. CTG wash water will be collected and pumped to the cooling tower.

BECHTEL POWER CORPORATION

DELTA ENERGY CENTER

Preliminary Plant Water Balance

JOB NO.	APPENDIX	REV.
24196	H - 6	E

4/12/00

ATTACHMENT D
DEC PLANT WATER BALANCE
(6 OF 6)

R:\CALPINE - DEC\PITT_WB_C.PPT