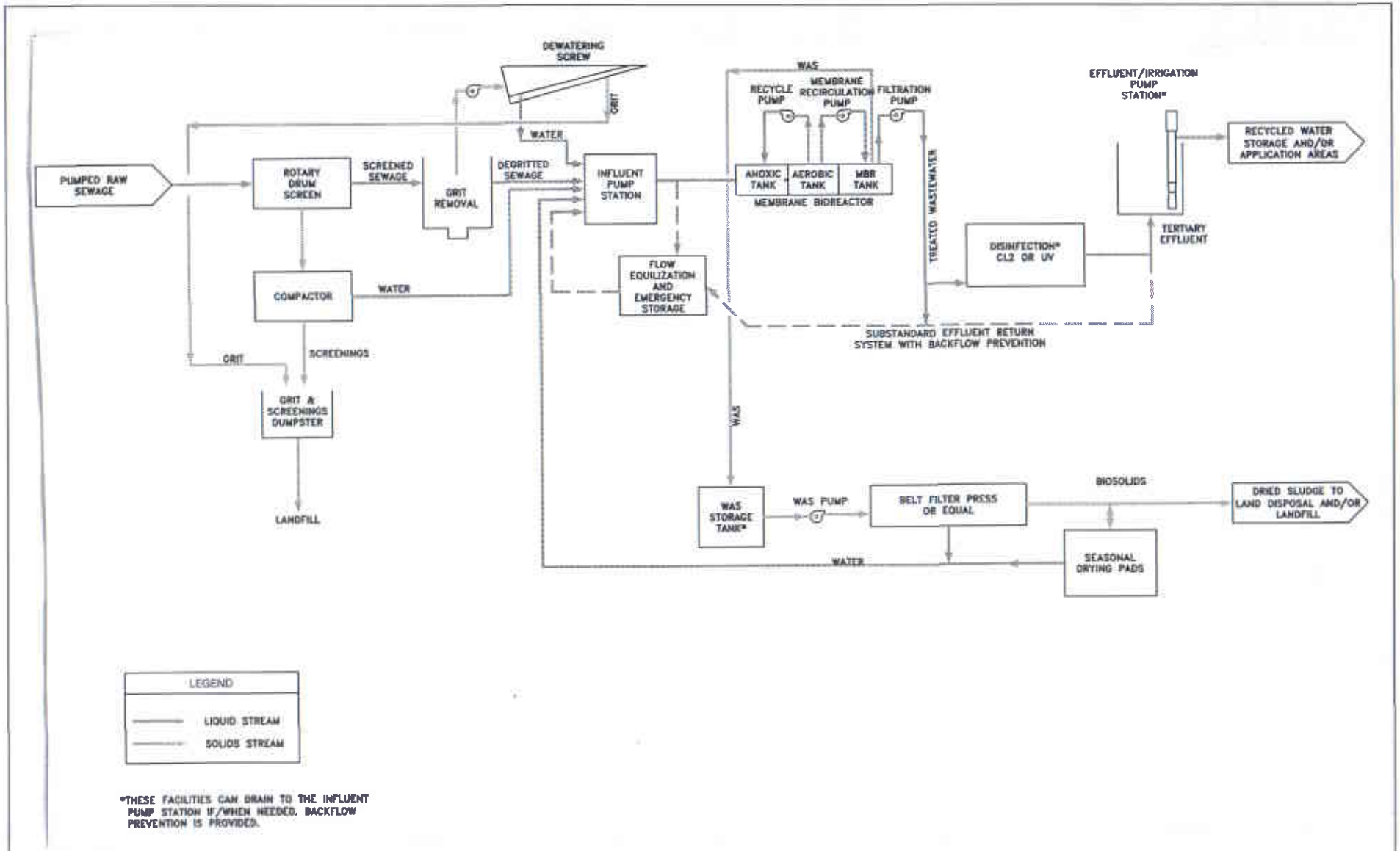

Not to Scale	Drawing Reference: modified from Figure 7-1 January 2006, RWD ECO:LOGIC ENG.	**WRP TREATMENT FACILITIES SITE PLAN** CITY OF LATHROP WATER RECYCLING PLANT SAN JOAQUIN COUNTY