CALIFORNIA REGIONAL WATER QUALITY CONTROL BOARD
REGION 9, SAN DIEGO REGION

TENTATIVE ORDER NO. R9-2006-0054
NPDES NO. CA0107417

WASTE DISCHARGE REQUIREMENTS FOR THE SOUTH ORANGE COUNTY WASTEWATER AUTHORITY DISCHARGE TO THE PACIFIC OCEAN VIA THE SAN JUAN CREEK OCEAN OUTFALL

The following Discharger is subject to waste discharge requirements as set forth in this Order:

Table 1. Discharger Information

Discharger	South Orange County Wastewater Authority
Name of Facility	San Juan Creek Ocean Outfall
Facility Address	34156 Del Obispo Street, Dana Point, CA 92629

The discharge by the South Orange County Wastewater Authority from the outfall identified below is subject to waste discharge requirements as set forth in this Order.

Table 2. Outfall Location

Discharge Point	Effluent Description	Discharge Point Latitude	Discharge Point Longitude	Receiving Water
Outfall 001	Municipal wastewater treatment plant effluent, waste brine, and dry weather nuisance discharges	33°26'10" N	117°41'53" W	Pacific Ocean

Table 3. Administrative Information

This Order was adopted by the Regional Water Board on:	June 14, 2006
This Order shall become effective on:	August 1, 2006
This Order shall expire on:	August 1, 2011
The U.S. Environmental Protection Agency (USEPA) and the Regional Water Board have classified this discharge as a major discharge.	
The Discharger shall file a Report of Waste Discharge in accordance with Title 23, California Code of Regulations, not later than 180 days in advance of the Order expiration date as application for issuance of new waste discharge requirements.	

IT IS HEREBY ORDERED, that this Order supercedes Order No. 2000-13 except for enforcement purposes, and, in order to meet the provisions contained in Division 7 of the California Water Code (CWC) and regulations adopted thereunder, and the provisions of the federal Clean Water Act (CWA) and regulations and guidelines adopted thereunder, the Discharger shall comply with the requirements herein.

I, John H. Robertus, Executive Officer, do hereby certify that this Order with all attachments is a full, true, and correct copy of an Order adopted by the California Regional Water Quality Control Board, San Diego Region, on **[June 14, 2006.**

Tentative
JOHN H. ROBERTUS
Executive Officer

CALIFORNIA REGIONAL WATER QUALITY CONTROL BOARD
REGION 9, SAN DIEGO REGION

ORDER NO. R9-2006-0054R9-2006-0054
NPDES NO. CA0107417

WASTE DISCHARGE REQUIREMENTS
FOR THE SOUTH ORANGE COUNTY WASTEWATER AUTHORITY
DISCHARGE TO THE PACIFIC OCEAN VIA THE SAN JUAN CREEK OCEAN OUTFALL

TABLE OF CONTENTS

I. Facility Information 4
II. Findings 5
III. Discharge Prohibitions 10
IV. Discharge Specifications and Effluent Limitations 11
A. Discharge Specifications 11
B. Effluent Limitations and Performance Goals 13
V. Receiving Water Limitations 19
A. Bacterial Characteristics 19
B. Chemical Characteristics 20
C. Biological Characteristics 20
D. Radioactivity 20
VI. Provisions 21
A. Standard Provisions 21
B. Monitoring and Reporting Program Requirements 22
C. Special Provisions 22
VII. Compliance Determination 32
A. Average Monthly Effluent Limitation (AMEL) 32
B. Average Weekly Effluent Limitation (AWEL) 32
C. Maximum Daily Effluent Limitation (MDEL) 33
D. Instantaneous Minimum Effluent Limitation 33
E. Instantaneous Maximum Effluent Limitation 33
F. Six-month Median Effluent Limitation 33
G. Mass Emission Rate 34
H. Percent Removal 34
I. Ocean Plan Provisions for Table B Constituents 34
J. Receiving Water Sampling Protocol 37
K. Acute Toxicity 37
L. Chronic Toxicity 38
M. Bacterial Standards and Analysis 38
N. Single Operational Upset 38

LIST OF TABLES

Table 1. Discharger Information 1
Table 2. Outfall Location 1
Table 3. Administrative Information 1
Table 4. Facility Information 4
Table 5. Basin Plan Beneficial Uses of the Pacific Ocean 7
Table 6. Ocean Plan Beneficial Uses 8
Table 7. Effluent Limitations based on Secondary Treatment Standards and Table A of the 2005 California Ocean Plan 13
Table 8. Effluent Limitations based on Table A of the 2005 California Ocean Plan 13
Table 9. Effluent Limitations based on the 2005 California Ocean Plan 14
Table 10. Performance Goals based on the 2005 California Ocean Plan 14

LIST OF ATTACHMENTS

Attachment A – Definitions A-1
Attachment B – Map B-1
Attachment C – Flow Schematic C-1
Attachment D – Federal Standard Provisions D-1
Attachment E – Monitoring and Reporting Program (MRP) E-1
Attachment F – Fact Sheet F-1

I. FACILITY INFORMATION

The following Discharger is subject to waste discharge requirements as set forth in this Order:

Table 4. Facility Information

Discharger	South Orange County Wastewater Authority
Name of Facility	San Juan Creek Ocean Outfall
Facility Address	34156 Del Obispo Street Dana Point, CA 92629 Orange County
Facility Contact, Title, and Phone	Tom Rosales, General Manager (949)234-5421
Mailing Address	34156 Del Obispo Street Dana Point, CA 92629
Type of Facility	Combined outfall
Facility Design Flow	Ocean outfall: 24 million gallons per day (MGD) (gravity flow) and 107 MGD (pumped flow)

II. FINDINGS

The California Regional Water Quality Control Board, San Diego Region (hereinafter Regional Water Board), finds:

A. **Background.** The South Orange County Wastewater Authority or SOCWA (hereinafter Discharger) is currently discharging pursuant to Order No. 2000-13 and National Pollutant Discharge Elimination System (NPDES) Permit No. CA0107417 which was adopted on February 9, 2000. Addendum No. 1 to Order No. 2000-13 was issued on April 12, 2000 that contained corrected effluent limitations for several constituents. Addendum No. 2 to Order No. 2000-13 was issued on October 10, 2001 to change the name in the Order from the South East Regional Reclamation Authority to SOCWA. The Discharger submitted a Report of Waste Discharge, dated August 10, 2004, with subsequent revisions and supplements, to apply for a NPDES permit renewal to discharge treated municipal wastewater from several publicly owned treatment works (POTWs) and other miscellaneous wastewater flows (brine from desalination facilities and dry weather nuisance flows) through the San Juan Creek Ocean Outfall (Ocean Outfall) to the Pacific Ocean.

B. **Facility Description.** SOCWA is a joint powers authority formed to reduce duplication and provide operational efficiency through consolidation. SOCWA is the legal successor to the Aliso Water Management Agency, the South East Regional Reclamation Authority, and the South Orange County Reclamation Authority. SOCWA is comprised of 10 member agencies including the City of Laguna Beach, the City of San Clemente, the City of San Juan Capistrano, El Toro Water District, Emerald Bay Service District, Irvine Ranch Water District, Moulton Niguel Water District (MNWD), Santa Margarita Water District (SMWD), South Coast Water District, and Trabuco Canyon Water District.

SOCWA operates the Ocean Outfall, which receives treated effluent from the following municipal wastewater treatment plants; the SOCWA Jay B. Latham Regional Treatment Plant (RTP), the SMWD Chiquita Water Reclamation Plant (WRP), the MNWD 3A Reclamation Plant (RP), and the City of San Clemente RP. In addition, a number of dry-weather nuisance discharges from a number of sources and brine discharges from the City of San Juan Capistrano and the South Coast Water District are also routed to the Ocean Outfall.

The SOCWA J.B. Latham RTP is a conventional activated sludge treatment facility. The SOCWA Jay B. Latham RTP receives for treatment raw municipal wastewater from the SMWD Oso Creek WRP when this treatment facility is off-line. All effluent from the SOCWA Jay B. Latham RTP is discharged to the Pacific Ocean through the Ocean Outfall. The plant's design treatment capacity is 13.0 MGD. The SOCWA Jay B. Latham RTP receives nuisance flows from a variety of projects designed to prevent dry-weather low-volume stormwater flows in specific storm drains from crossing the beaches to the ocean by diverting the untreated flows to the headworks of the SOCWA Jay B. Latham RTP.

The SMWD Chiquita WRP is a high-rate trickling filter treatment facility. SMWD constructed advanced wastewater treatment facilities at the SMWD Chiquita WRP to provide recycled water for irrigation. Effluent not sent to the advanced treatment facilities for recycled water is discharged through the Ocean Outfall via the SMWD Chiquita Land Outfall. The plant's design treatment capacity is 9.0 MGD.

The MNWD 3A RP is a conventional activated sludge treatment facility. Secondary effluent is directed to an on-site advanced water reclamation facility for further treatment or is discharged through the Ocean Outfall via the San Juan Basin Authority Bypass, jointly owned by MNWD and SMWD, which connects to the SMWD Chiquita Land Outfall. The design capacity for treatment is 6.0 MGD.

The City of San Clemente RP is a conventional activated sludge treatment facility. Secondary effluent is directed to an on-site advanced water reclamation facility for further treatment or discharged through the Ocean Outfall via the San Clemente Land Outfall. The design capacity for treatment is 6.98 MGD.

SOCWA applied for authorization to discharge from an urban runoff treatment process in the City of San Clemente. In particular, the City has developed a management program to mitigate the impacts of dry weather nuisance flow from the Segunda Deshecha (M02) Flood Control Channel. This program includes use of a treatment system located at the City of San Clemente RP. According to the application, the average flows through the Segunda Deshecha (M02) Flood Control Channel are expected to range from 0.43 to 1.3 cubic feet per second (cfs); the design is based on 1.5 cfs (1 MGD). The backwash water from the treatment facility will be discharged into the City of San Clemente RP sewer collection system.

The Ocean Outfall also receives a discharge from the City of San Juan Capistrano Reverse Osmosis (RO) Water Treatment Plant. The resulting brine discharge is sent through the Ocean Outfall, with estimated flows of 0.73 MGD.

As described in the report of waste discharge, SOCWA anticipates the future addition of discharges from the South Coast Water District groundwater recovery facility (GRF). According to SOCWA, the GRF is currently under construction, the completion of which is anticipated in March/April 2007. The initial capacity of the GRF will be 976 acre feet of extracted water, producing approximately 800 acre feet of reclaimed water. At this production capacity, the brine flow to the Ocean Outfall is estimated to be approximately 0.125 MGD. The flow will be directed to the SMWD Chiquita Land Outfall Line.

The combined discharge from the Ocean Outfall enters the Pacific Ocean, a water of the United States, at Outfall 001 (see table on cover page). Attachment B provides a map of the area in the vicinity of the Ocean Outfall. Attachment C provides a flow schematic for each of the POTWs.

C. **Legal Authorities.** This Order is issued pursuant to section 402 of the Federal CWA and implements regulations contained in the Code of Federal Regulations (CFR) adopted by the U.S. Environmental Protection Agency (USEPA) and Chapter 5.5, Division 7 of the California Water Code (CWC). It shall serve as a NPDES permit for point source discharges through the Ocean Outfall to surface waters. This Order also serves as Waste Discharge Requirements (WDRs) pursuant to Article 4, Chapter 4 of the CWC.

D. **Rationale for Requirements.** The Regional Water Board developed the requirements in this Order based on information submitted as part of the application, through monitoring and reporting programs, and other available environmental data. The Fact Sheet, Attachment F, which contains background information and rationale for Order requirements and other provisions, is hereby incorporated into this Order and, thus, constitute part of the Findings for this Order.

E. **California Environmental Quality Act (CEQA).** This action to adopt an NPDES permit is exempt from the provisions of the California Environmental Quality Act (Public Resources Code Section 21100, et seq.) in accordance with Section 13389 of the CWC.

F. **Technology-Based Effluent Limitations.** 40 CFR 122.44(a) requires that permits include applicable technology-based limitations and standards. This Order includes technology-based effluent limitations based on Secondary Treatment Standards at 40 CFR Part 133. A detailed discussion of the technology-based effluent limitations development is included in the Fact Sheet (Attachment F).

G. **Water Quality-Based Effluent Limitations.** Section 122.44(d) of 40 CFR requires that permits include water quality-based effluent limitations (WQBELs) to attain and maintain applicable numeric and narrative water quality objectives to protect the beneficial uses of the receiving water. Where numeric water quality objectives have not been established, 40 CFR 122.44(d) specifies that WQBELs may be established using USEPA criteria guidance under CWA section 304(a), proposed State criteria or a State policy interpreting narrative criteria supplemented with other relevant information, or an indicator parameter.

H. **Water Quality Control Plans.** The Regional Water Board adopted a Water Quality Control Plan for the San Diego Basin (hereinafter Basin Plan) on September 8, 1994. The Basin Plan was subsequently approved by the State Water Resources Control Board (State Water Board) on December 13, 1994. Subsequent revisions to the Basin Plan have also been adopted by the Regional Water Board and approved by the State Water Board. The Basin Plan designates beneficial uses, establishes water quality objectives, and contains implementation programs and policies to achieve those objectives for all waters addressed through the plan. Beneficial uses applicable to the Pacific Ocean are as follows:

Table 5. Basin Plan Beneficial Uses of the Pacific Ocean

Discharge Point	Receiving Water Name	Beneficial Use
Outfall 001	Pacific Ocean	Industrial Service Supply; Navigation; Contact Water Recreation; Non-Contact Water Recreation; Commercial and Sport Fishing; Preservation of Biological Habitats of Special Significance; Wildlife Habitat; Rare, Threatened, or Endangered Species; Marine Habitat; Aquaculture; Migration of Aquatic Organisms; Spawning, Reproduction, and/or Early Development; Shellfish Harvesting

The Basin Plan relies primarily on the requirements of the *Water Quality Control Plan for Ocean Waters of California* (Ocean Plan) for protection of the beneficial uses of the State ocean waters. The Basin Plan, however, may contain additional water quality objectives applicable to the Discharger.

The State Water Board adopted a *Water Quality Control Plan for Control of Temperature in the Coastal and Interstate Water and Enclosed Bays and Estuaries of California* (Thermal Plan) on May 18, 1972, and amended this plan on September 18, 1975. This plan contains temperature objectives for coastal waters.

Requirements of this Order specifically implement the applicable Water Quality Control Plans.

I. **California Ocean Plan.** The State Water Board adopted the Ocean Plan in 1972 and amended it in 1978, 1983, 1988, 1990, 1997, 2000, and 2005. The State Water Board adopted the latest amendment on April 21, 2005 and was approved by USEPA on February 14, 2006. The Ocean Plan is applicable, in its entirety, to point source discharges to the ocean. The Ocean Plan identifies beneficial uses of ocean waters of the State to be protected as summarized below:

Table 6. Ocean Plan Beneficial Uses

Discharge Point	Receiving Water	Beneficial Uses
Outfall 001	Pacific Ocean	Industrial water supply; water contact and non-contact recreation, including aesthetic enjoyment; navigation; commercial and sport fishing; mariculture; preservation and enhancement of designated Areas of Special Biological Significance (ASBS); rare and endangered species; marine habitat; fish spawning and shellfish harvesting

In order to protect the beneficial uses, the Ocean Plan establishes water quality objectives and a program of implementation. Requirements of this Order implement the Ocean Plan.

J. **Stringency of Requirements for Individual Pollutants.** This Order contains restrictions on individual pollutants that are no more stringent than required to implement the technology-based requirements based on the USEPA established standards of performance for POTW secondary treatment at 40 CFR Part 133 and on

Table A of the California Ocean Plan and the water-quality based requirements necessary to implement the water quality objectives established in Table B of the California Ocean Plan.

K. **Antidegradation Policy.** 40 CFR 131.12 requires that State water quality standards include an antidegradation policy consistent with the federal policy. The State Water Board established California's antidegradation policy in State Water Board Resolution No. 68-16, which incorporates the requirements of the federal antidegradation policy. Resolution No. 68-16 requires that existing quality of waters be maintained unless degradation is justified based on specific findings. As discussed in detail in the Fact Sheet (Attachment F), a discharge in compliance with this Order is consistent with the antidegradation provisions of 40 CFR 131.12 and State Water Board Resolution No. 68-16.

L. **Anti-Backsliding Requirements.** Sections 402(o)(2) and 303(d)(4) of the CWA and federal regulations at 40 CFR 122.44(l) prohibit backsliding in NPDES permits. These anti-backsliding provisions require effluent limitations in a reissued permit to be as stringent as those in the previous permit, with some exceptions where limitations may be relaxed. Some effluent limitations in this Order are less stringent than those in the previous Order or have been removed. As discussed in detail in the Fact Sheet (Attachment F), the relaxation or removal of effluent limitations in this Order is consistent with the anti-backsliding requirements of the CWA and federal regulations.

M. **Monitoring and Reporting.** 40 CFR 122.48 requires that all NPDES permits specify requirements for recording and reporting monitoring results. Sections 13267 and 13383 of the CWC authorize the Regional Water Boards to require technical and monitoring reports. The Monitoring and Reporting Program (Attachment E) establishes monitoring and reporting requirements to implement federal and State requirements.

N. **Standard and Special Provisions.** Standard Provisions, which in accordance with 40 CFR 122.41 and 122.42, apply to all NPDES discharges and must be included in every NPDES permit, are provided in Attachment D. The Regional Water Board has also included in this Order special provisions applicable to the Discharger. A rationale for the special provisions contained in this Order is provided in the attached Fact Sheet (Attachment F).

O. **Notification of Interested Parties.** The Regional Water Board has notified the Discharger and interested agencies and persons of its intent to prescribe waste discharge requirements for the discharge and has provided them with an opportunity to submit their written comments and recommendations. Details of notification are provided in the Fact Sheet (Attachment F) of this Order.

P. **Consideration of Public Comment.** The Regional Water Board, in a public meeting, heard and considered all comments pertaining to the discharge. Details of the Public Hearing are provided in the Fact Sheet (Attachment F) of this Order.

THE DISCHARGER SHALL COMPLY WITH THE REQUIREMENTS AND PROVISIONS BELOW, including attachments D and E, which are specifically referenced in the requirements and provisions.

III. DISCHARGE PROHIBITIONS

A. The discharge of waste from the SOCWA Jay B. Latham RTP, the SMWD Chiquita WRP, the MNWD 3A RP, and the City of San Clemente RP not treated by a secondary treatment process and the discharge of waste from these facilities not in compliance with the effluent limitations specified in Section IV.B of this Order, and/or to a location other than the San Juan Creek Ocean Outfall, unless specifically regulated by this Order or separate waste discharge requirements, or except under recognized upset and bypass conditions set forth in Attachment D, is prohibited.

   The discharge of waste from the Segunda Deshecha (M02) Flood Control Channel, the City of San Juan RO Water Treatment Plant, and the South Coast Water District GRF not in compliance with the effluent limitations specified in Section IV.B of this Order, and/or to a location other than the San Juan Creek Ocean Outfall, unless specifically regulated by this Order or separate waste discharge requirements, is prohibited.

B. Waste discharge prohibitions of the Basin Plan:

   1. The discharge of waste to waters of the state in a manner causing, or threatening to cause a condition of pollution, contamination, or nuisance as defined in CWC Section 13050, is prohibited.

   2. The discharge of waste to land, except as authorized by waste discharge requirements or the terms described in CWC Section 13264 is prohibited.

   3. The discharge of pollutants or dredged or fill material to waters of the United States except as authorized by an NPDES permit or a dredge or fill material permit (subject to the exemption described in CWC Section 13376) is prohibited.

   4. The discharge of treated or untreated waste to lakes or reservoirs used for municipal water supply, or to inland surface water tributaries thereto, is prohibited.

   5. The discharge of waste in a manner causing flow, ponding, or surfacing on lands not owned or under the control of the Discharger is prohibited unless the discharge is authorized by this Regional Water Board.

   6. The dumping, deposition, or discharge of waste directly into waters of the state, or adjacent to such waters in any manner that may permit its being transported into the waters, is prohibited unless authorized by the Regional Water Board.

   7. Any discharge to a storm water conveyance system that is not composed entirely of “storm water” is prohibited unless authorized by this Regional Water Board. [Federal

Regulations 40 CFR 122.26 (b) defines storm water as storm water runoff, snow melt runoff, and surface runoff and drainage.]

8. The unauthorized discharge of treated or untreated sewage to waters of the state or to a storm water conveyance system is prohibited.

9. The discharge of radioactive wastes amenable to alternative methods of disposal into the waters of the state is prohibited.

10. The discharge of any radiological, chemical, or biological warfare agent into waters of the state is prohibited.

11. The discharge of sand, silt, clay, or other earthen materials from any activity, including land grading and construction, in quantities that cause deleterious bottom deposits, turbidity or discoloration in waters of the state or that unreasonably affect, or threaten to affect, beneficial uses of such waters is prohibited.

C. The discharge of waste to Areas of Special Biological Significance, as designated by the State Water Board, is prohibited.

D. The discharge of sludge to the ocean is prohibited; the discharge of municipal and industrial waste sludge directly to the ocean or into a waste stream that discharges to the ocean is prohibited. The discharge of sludge digester supernatant directly to the ocean or to a waste stream that discharges to the ocean without further treatment is prohibited.

E. The bypassing of untreated wastes containing concentrations of pollutants in excess of those in Tables A or B of the Ocean Plan is prohibited, except under upset conditions, as described in Attachment D of this Order, Standard Provision I. H.

F. Compliance with Discharge Prohibitions contained in Section III.H of the Ocean Plan is a requirement of this Order.

IV. DISCHARGE SPECIFICATIONS AND EFFLUENT LIMITATIONS

A. Discharge Specifications

The discharge of effluent through Outfall 001 shall comply with the following:

1. Waste management systems that discharge to the Pacific Ocean through Outfall 001 must be designed and operated in a manner that will maintain the indigenous marine life and a healthy and diverse marine community.

2. Waste discharged to the Pacific Ocean through Outfall 001 must be essentially free of:

a. Material that is floatable or will become floatable upon discharge.

b. Settleable material or substances that may form sediments, which will degrade benthic communities or other aquatic life.

c. Substances, which will accumulate to toxic levels in marine waters, sediments, or biota.

d. Substances that significantly decrease the natural light to benthic communities and other marine life.

e. Materials that result in aesthetically undesirable discoloration of the ocean surface.

3. Waste effluents shall be discharged through Outfall 001 in a manner that provides sufficient initial dilution to minimize the concentrations of substances not removed in treatment.

4. The location of waste discharges from the Discharger's Facilities shall assure that:

   a. Pathogenic organisms and viruses are not present in areas where shellfish are harvested for human consumption or in areas used for swimming or other body contact sports.

   b. Natural water quality conditions are not altered in areas designated as being areas of special biological significance or areas that existing marine laboratories use as a source of seawater.

   c. Maximum protection is provided to the marine environment.

5. Waste that contains pathogenic organisms or viruses shall be discharged from the Facility through Outfall 001 a sufficient distance from shellfishing and water contact sports areas to maintain applicable bacterial standards without disinfection. Where conditions are such that an adequate distance cannot be attained, reliable disinfection in conjunction with a reasonable separation of the discharge point from the area of use must be provided. Disinfection procedures that do not increase effluent toxicity and that constitute the least environmental and human hazard shall be used.

6. The calendar-monthly average of daily effluent discharge flow rates from the Discharger's Facilities through the San Juan Creek Ocean Outfall shall not exceed 36.385 MGD.

B. Effluent Limitations and Performance Goals

The discharge of effluent to Outfall 001 shall be measured at Monitoring Location M-001 as described in the Attachment E, Monitoring and Reporting Program, except as otherwise noted. Scientific notation, with some exceptions, is used to express the effluent limitations and performance goals to prevent ambiguity. The effluent limitations and performance goals below are enforceable to the number of significant digits given in the effluent limitation or performance goal.

1. The discharge of effluent from the SOCWA Jay B. Latham RTP, the SMWD Chiquita WRP, the MNWD 3A RP, and the City of San Clemente RP to the Ocean Outfall, as monitored at Monitoring Locations M-001A, M-001B, M-001C, and M-001D, respectively, shall maintain compliance with the following effluent limitations:

Table 7. Effluent Limitations based on Secondary Treatment Standards and Table A of the 2005 California Ocean Plan

Constituent	Units	Effluent Limitations					
		Max Daily	Average Monthly	Average Weekly	Instantaneous Min	Instantaneous Max	6 Month Median
CBOD (5-day at 20°C)	mg/L		25	40			
	%	The average monthly percent removal shall not be less than 85 percent.					
Total Suspended Solids	mg/L		30	45			
	%	The average monthly percent removal shall not be less than 85 percent.					
pH	Standard units				6.0	9.0	
Oil and Grease	mg/l		25	40		75	
Settleable Solids	ml/l		1.0	1.5		3.0	
Turbidity	NTU		75	100		225	

2. The discharge of effluent from the Segunda Deshecha (M02) Flood Control Channel, the City of San Juan RO Water Treatment Plant, and the South Coast Water District GRF as monitored at Monitoring Locations M-001E, M-001F, and M-001G, respectively, shall maintain compliance with the following effluent limitations:

Table 8. Effluent Limitations based on Table A of the 2005 California Ocean Plan

Constituent	Units	Effluent Limitations					
		Max Daily	Average Monthly	Average Weekly	Instantaneous Min	Instantaneous Max	6 Month Median
Total Suspended Solids	mg/L		60				
pH	Standard units				6.0	9.0	
Oil and Grease	mg/L		25	40		75	
Settleable Solids	ml/L		1.0	1.5		3.0	
Turbidity	NTU		75	100		225	

3. The discharge of effluent from the Ocean Outfall (Outfall 001), as monitored at Monitoring Location M-001, shall maintain compliance with the following effluent limitations:

Table 9. Effluent Limitations based on the 2005 California Ocean Plan[1]

Constituent	Units	Effluent Limitations					
		Max Daily	Average Monthly	Average Weekly	Instantaneous		6 Month Median
					Min	Max	
Chronic Toxicity [2]	TU_c	101					
TCDD Equivalents [3]	µg/L		3.94E-07				
	lbs/day		1.21E-07				

[1] Scientific "E" notation is used to express certain values. In scientific "E" notation, the number following the "E" indicates the position of the decimal point in the value. Negative numbers after the "E" indicate that the value is less than 1, and positive numbers after the "E" indicate that the value is greater than 1. In this notation a value of 6.1 E–02 represents a value of 6.1×10^{-2} or 0.061, 6.1E+2 represents 6.1×10^{2} or 610, and 6.1E+00 represents 6.1×10^{0} or 6.1.

[2] Chronic toxicity expressed as Chronic Toxicity Units (TU_c) = 100 / NOEL, where NOEL (No Observed Effect Level) is expressed as the maximum percent effluent or receiving water that causes no observable effect on a test organism, as determined by the result of critical life stage toxicity tests identified in Section V of Monitoring and Reporting Program No. R9-2006-0054.

[3] TCDD Equivalents shall mean the sum of concentrations of chlorinated dibenzodioxins (2,3,7,8-CDDs) and chlorinated dibenzofurans (2,3,7,8-CDFs) multiplied by their respective toxicity factors, as shown by the table below:

Isomer Group	Toxicity Equivalence Factor
2,3,7,8 - tetra CDD	1.0
2,3,7,8 - penta CDD	0.5
2,3,7,8 - hexa CDD	0.1
2,3,7,8 - hepta CDD	0.01
octa CDD	0.001
2,3,7,8 - tetra CDF	0.1
1,2,3,7,8 - penta CDF	0.05
2,3,4,7,8 - penta CDF	0.5
2,3,7,8 - hexa CDFs	0.1
2,3,7,8 - hepta CDFs	0.01
octa CDF	0.001

4. Constituents that do not have reasonable potential or had inconclusive reasonable potential analysis results are referred to as performance goal constituents and assigned the performance goals listed in the following table. Performance goal constituents shall also be monitored at M-001, but the results will be used for informational purposes only, not compliance determination.

Table 10. Performance Goals based on the 2005 California Ocean Plan

Constituent	Units	Performance Goals[1]					
		Max Daily	Average Monthly	Average Weekly	Instantaneous		6 Month Median
					Min	Max	
Arsenic	ug/L	2.93E+03				7.78E+03	5.08E+02
	lbs/day	9.01E+02				2.39E+03	1.56E+02

Constituent	Units	Performance Goals[1]					
		Max Daily	Average Monthly	Average Weekly	Instantaneous		6 Month Median
					Min	Max	
Cadmium	ug/L	4.04E+02				1.01E+03	1.01E+02
	lbs/day	1.24E+02				3.10E+02	3.10E+01
Chromium VI [2]	ug/L	8.08E+02				2.02E+03	2.02E+02
	lbs/day	2.48E+02				6.21E+02	6.21E+01
Copper	ug/L	1.01E+03				2.83E+03	1.03E+02
	lbs/day	3.11E+02				8.69E+02	3.16E+01
Lead	ug/L	8.08E+02				2.02E+03	2.02E+02
	lbs/day	2.48E+02				6.21E+02	6.21E+01
Mercury	ug/L	1.61E+01				4.04E+01	3.99E+00
	lbs/day	4.95E+00				1.24E+01	1.23E+00
Nickel	ug/L	2.02E+03				5.05E+03	5.05E+02
	lbs/day	6.21E+02				1.55E+03	1.55E+02
Selenium	ug/L	6.06E+03				1.52E+04	1.52E+03
	lbs/day	1.86E+03				4.65E+03	4.65E+02
Silver	ug/L	2.67E+02				6.91E+02	5.47E+01
	lbs/day	8.20E+01				2.12E+02	1.68E+01
Zinc	ug/L	7.28E+03				1.94E+04	1.22E+03
	lbs/day	2.24E+03				5.96E+03	3.75E+02
Cyanide [3]	ug/L	4.04E+02				1.01E+03	1.01E+02
	lbs/day	1.24E+02				3.10E+02	3.10E+01
Total Chlorine Residual [4]	ug/L	8.08E+02				6.06E+03	2.02E+02
	lbs/day	2.48E+02				1.86E+03	6.21E+01
Ammonia (expressed as nitrogen)	ug/L	2.42E+05				6.06E+05	6.06E+04
	lbs/day	7.45E+04				1.86E+05	1.86E+04
Acute Toxicity [5]	TU_a	3.30E+00				--	--
Phenolic Compounds (non-chlorinated) [6]	ug/L	1.21E+04				3.03E+04	3.03E+03
	lbs/day	3.72E+03				9.31E+03	9.31E+02
Phenolic Compounds (chlorinated) [7]	ug/L	4.04E+02				1.01E+03	1.01E+02
	lbs/day	1.24E+02				3.10E+02	3.10E+01
Endosulfan [8]	ug/L	1.82E+00				2.73E+00	9.09E-01
	lbs/day	5.58E-01				8.38E-01	2.79E-01
Endrin	ug/L	4.04E-01				6.06E-01	2.02E-01
	lbs/day	1.24E-01				1.86E-01	6.21E-02
HCH [9]	ug/L	8.08E-01				1.21E+00	4.04E-01
	lbs/day	2.48E-01				3.72E-01	1.24E-01
Radioactivity [10]		Not to exceed limits specified under Column 2 of Table 2 in Appendix B of Title 10 Code of Federal Regulations Part 20, Standards for Protection Against Radiation					
Acrolein	ug/L		2.22E+04				
	lbs/day		6.83E+03				
Antimony	ug/L		1.21E+05				
	lbs/day		3.72E+04				
Bis (2-chloroethoxy) Methane	ug/L		4.44E+02				
	lbs/day		1.37E+02				
Bis (2-chloroisopropyl) Ether	ug/L		1.21E+05				
	lbs/day		3.72E+04				
Chlorobenzene	ug/L		5.76E+04				
	lbs/day		1.77E+04				
Chromium (III)	ug/L		1.92E+07				
	lbs/day		5.90E+06				

Constituent	Units	Performance Goals[1]					
		Max Daily	Average Monthly	Average Weekly	Instantaneous		6 Month Median
					Min	Max	
Di-n-butyl Phthalate	ug/L		3.54E+05				
	lbs/day		1.09E+05				
Dichlorobenzenes [11]	ug/L		5.15E+05				
	lbs/day		1.58E+05				
Diethyl Phthalate	ug/L		3.33E+06				
	lbs/day		1.02E+06				
Dimethyl Phthalate	ug/L		8.28E+07				
	lbs/day		2.54E+07				
4,6-Dinitro-2-Methylphenol	ug/L		2.22E+04				
	lbs/day		6.83E+03				
2,4-Dinitrophenol	ug/L		4.04E+03				
	lbs/day		1.24E+03				
Ethylbenzene	ug/L		4.14E+05				
	lbs/day		1.27E+05				
Fluoranthene	ug/L		1.52E+03				
	lbs/day		4.65E+02				
Hexachlorocyclo-pentadiene	ug/L		5.86E+03				
	lbs/day		1.80E+03				
Nitrobenzene	ug/L		4.95E+02				
	lbs/day		1.52E+02				
Thallium	ug/L		2.02E+02				
	lbs/day		6.21E+01				
Toluene	ug/L		8.59E+06				
	lbs/day		2.64E+06				
Tributyltin	ug/L		1.41E-01				
	lbs/day		4.34E-02				
1,1,1-Trichloroethane	ug/L		5.45E+07				
	lbs/day		1.68E+07				
Acrylonitrile	ug/L		1.01E+01				
	lbs/day		3.10E+00				
Aldrin	ug/L		2.22E-03				
	lbs/day		6.83E-04				
Benzene	ug/L		5.96E+02				
	lbs/day		1.83E+02				
Benzidine	ug/L		6.97E-03				
	lbs/day		2.14E-03				
Beryllium	ug/L		3.33E+00				
	lbs/day		1.02E+00				
Bis (2-chloroethyl) Ether	ug/L		4.55E+00				
	lbs/day		1.40E+00				
Bis (2-ethlyhexyl) Phthalate	ug/L		3.54E+02				
	lbs/day		1.09E+02				
Carbon Tetrachloride	ug/L		9.09E+01				
	lbs/day		2.79E+01				
Chlordane [12]	ug/L		2.32E-03				
	lbs/day		7.14E-04				
Chlorodibromomethane	ug/L		8.69E+02				
	lbs/day		2.67E+02				
Chloroform	ug/L		1.31E+04				
	lbs/day		4.03E+03				

Constituent	Units	Performance Goals[1]					
		Max Daily	Average Monthly	Average Weekly	Instantaneous		6 Month Median
					Min	Max	
DDT [13]	ug/L		1.72E-02				
	lbs/day		5.27E-03				
1,4-Dichlorobenzene	ug/L		1.82E+03				
	lbs/day		5.41E+02				
3,3'-Dichlorobenzidine	ug/L		8.18E-01				
	lbs/day		2.44E-01				
1,2-Dichloroethane	ug/L		2.83E+03				
	lbs/day		8.42E+02				
1,1-Dichloroethylene	ug/L		9.09E+01				
	lbs/day		2.71E+01				
Dichlorobromomethane	ug/L		6.26E+02				
	lbs/day		1.86E+02				
Dichloromethane	ug/L		4.55E+04				
	lbs/day		1.35E+04				
1,3-Dichloropropene	ug/L		8.99E+02				
	lbs/day		2.68E+02				
Dieldrin	ug/L		4.04E-03				
	lbs/day		1.20E-03				
2,4-Dinitrotoluene	ug/L		2.63E+02				
	lbs/day		7.82E+01				
1,2-Diphenylhydrazine	ug/L		1.62E+01				
	lbs/day		4.81E+00				
Halomethanes [14]	ug/L		1.31E+04				
	lbs/day		3.91E+03				
Heptachlor	ug/L		5.05E-03				
	lbs/day		1.50E-03				
Heptachlor Epoxide	ug/L		2.02E-03				
	lbs/day		6.01E-04				
Hexachlorobenzene	ug/L		2.12E-02				
	lbs/day		6.32E-03				
Hexachlorobutadiene	ug/L		1.41E+03				
	lbs/day		4.21E+02				
Hexachloroethane	ug/L		2.53E+02				
	lbs/day		7.52E+01				
Isophorone	ug/L		7.37E+04				
	lbs/day		2.20E+04				
N-Nitroso-dimethylamine	ug/L		7.37E+02				
	lbs/day		2.20E+02				
N-Nitrosodi-N-propylamine	ug/L		3.84E+01				
	lbs/day		1.14E+01				
N-Nitrosodiphenyl-amine	ug/L		2.53E+02				
	lbs/day		7.52E+01				
PAHs [15]	ug/L		8.89E-01				
	lbs/day		2.65E-01				
PCBs [16]	ug/L		1.92E-03				
	lbs/day		5.71E-04				
1,1,2,2-Tetrachloroethane	ug/L		2.32E+02				
	lbs/day		6.92E+01				
Tetrachloroethylene	ug/L		2.02E+02				
	lbs/day		6.01E+01				

Constituent	Units	Performance Goals[1]					
		Max Daily	Average Monthly	Average Weekly	Instantaneous		6 Month Median
					Min	Max	
Toxaphene	ug/L		2.12E-02				
	lbs/day		6.32E-03				
Trichloroethylene	ug/L		2.73E+03				
	lbs/day		8.12E+02				
1,1,2-Trichloroethane	ug/L		9.49E+02				
	lbs/day		2.83E+02				
2,4,6-Trichlorophenol	ug/L		2.93E+01				
	lbs/day		8.72E+00				
Vinyl Chloride	ug/L		3.64E+03				
	lbs/day		1.08E+03				

[1] Scientific "E" notation is used to express certain values. In scientific "E" notation, the number following the "E" indicates the position of the decimal point in the value. Negative numbers after the "E" indicate that the value is less than 1, and positive numbers after the "E" indicate that the value is greater than 1. In this notation a value of 6.1 E–02 represents a value of 6.1×10^{-2} or 0.061, 6.1E+2 represents 6.1×10^{2} or 610, and 6.1E+00 represents 6.1×10^{0} or 6.1.

[2] Dischargers may, at their option, apply this performance goal as a total chromium performance goal.

[3] If a Discharger can demonstrate to the satisfaction of the Regional Water Board (subject to USEPA approval) that an analytical method is available to reliably distinguish between strongly and weakly complexed cyanide, performance goals may be evaluated with the combined measurement of free cyanide, simple alkali metal cyanides, and weakly complexed organometalic cyanide complexes. In order for the analytical method to be acceptable, the recovery of free cyanide from metal complexes must be comparable to that achieved by the approved method in 40 CFR 136, as revised May 14, 1999.

[4] The water quality objectives for total chlorine residual applicable to intermittent discharges not exceeding two hours, shall be determined through the use of the following equation: $\log y = -0.43 (\log x) + 1.8$, where y = the water quality objective (in ug/L) to apply when chlorine is being discharged; x = the duration of uninterrupted chlorine discharge in minutes. Actual performance goals for total chlorine, when discharging intermittently, shall then be determined according to Implementation Procedures for Table B from the Ocean Plan, using a minimum probable initial dilution factor of 100 and a flow rate of 36.835 MGD.

[5] Acute toxicity expressed as Acute Toxicity Units (TU_a) = 100 / LC50, where LC50 (Lethal Concentration 50%l) is expressed as the percent waste giving 50% survival of test organism, as determined by the result of toxicity tests identified in Section V of Monitoring and Reporting Program No. R9-2006-0054.

[6] Non-chlorinated phenolic compounds shall mean the sum of 2-nitrophenol, 4-nitrophenol, and phenol.

[7] Chlorinated phenolic compounds shall mean the sum of 2-chlorophenol, 2,4-dichlorophenol, 3-methyl-4-chlorophenol, and pentachlorophenol.

[8] Endosulfan shall mean the sum of endosulfan-alpha and -beta and endosulfan sulfate.

[9] HCH shall mean the sum of the alpha, beta, gamma (lindane), and delta isomers of hexachlorocyclohexane.

[10] Radioactivity performance goals are as specified in Title 17 California Code of Regulations, Section 30253, Standards for Protection Against Radiation. Reference to Section 30253 is prospective, including future changes to any incorporated provisions of federal law, as the changes take effect.

[11] Dichlorobenzenes shall mean the sum of 1,2-dichlorobenzene and 1,3-dichlorobenzene.

[12] Chlordane shall mean the sum of chlordane-alpha, chlordane-gamma, chlordene-alpha, chlordene-gamma, nonachlor-alpha, nonachlor-gamma, and oxychlordane.

[13] DDT shall mean the sum of 4,4'DDT; 2,4'DDT; 4,4'DDE; 2,4'DDE; 4,4'DDD; and 2,4'DDD.

[14] Halomethanes shall mean the sum of bromoform, bromomethane (methyl bromide), and chloromethane (methyl chloride).

[15] PAHs (polynuclear aromatic hydrocarbons) shall mean the sum of acenapthalene, anthracene, 1,2-benzanthracene, 3,4-benzofluoranthene, benzo[k]fluoranthene, 1,12-benzoperylene, benzo[a]pyrene, chrysene, dibenzo[ah]anthracene, fluorine, indeno[1,2,3-cd]pyrene, phenanthrene, and pyrene.

[16] PCBs (polychlorinated biphenyls) shall mean the sum of chlorinated biphenyls whose analytical characteristics resemble those of Aroclor-1016, Aroclor-1221, Aroclor-1232, Aroclor-1242, Aroclor-1248, Aroclor-1254, and Aroclor-1260.

V. RECEIVING WATER LIMITATIONS

Unless specifically excepted by this Order, the discharge shall not cause violation of the following water quality objectives. Compliance with these objectives shall be determined by samples collected at stations representative of the area within the waste field where initial dilution is completed.

A. Bacterial Characteristics

1. Within a zone bounded by the shoreline and a distance of 1,000 feet from the shoreline or the 30-foot depth contour, whichever is further from the shoreline, and in areas outside this zone used for water contact sports, as determined by the Regional Water Board, but including all kelp beds, the following bacterial objectives shall be maintained throughout the water column.

   a. 30-day Geometric Mean – The following standards are based on the geometric mean of the five most recent samples from each site:

      i. Total coliform density shall not exceed 1,000 per 100 ml;
      ii. Fecal coliform density shall not exceed 200 per 100 ml; and
      iii. Enterococcus density shall not exceed 35 per 100 ml.

   b. Single Sample Maximum:

      i. Total coliform density shall not exceed 10,000 per 100 ml;
      ii. Fecal coliform density shall not exceed 400 per 100 ml; and
      iii. Enterococcus density shall not exceed 104 per 100 ml.

2. The Initial Dilution Zone for any wastewater outfall shall be excluded from designation as kelp beds for purposes of bacterial standards. Adventitious assemblages of kelp plants on waste discharge structures (e.g., outfall pipes and diffusers) do not constitute kelp beds for purposes of bacterial standards.

3. At all areas where shellfish may be harvested for human consumption, as determined by the Regional Water Board, the median total coliform density shall not exceed 70 per 100 ml throughout the water column, and not more than 10 percent of the samples shall exceed 230 per 100 ml.

1.

B. Chemical Characteristics

1. The dissolved oxygen concentration shall not at any time be depressed more than 10 percent from that which occurs naturally, as the result of the discharge of oxygen demanding waste materials.

2. The pH shall not be changed at any time more than 0.2 units from that which occurs naturally.

3. The dissolved sulfide concentration of waters in and near sediments shall not be significantly increased above that present under natural conditions.

4. The concentration of substances set forth in Chapter II, Table B of the Ocean Plan, shall not be increased in marine sediments to levels that would degrade indigenous biota.

5. The concentration of organic materials in marine sediments shall not be increased to levels that would degrade marine life.

6. Nutrient materials shall not cause objectionable aquatic growths or degrade indigenous biota.
7.

C. Biological Characteristics

1. Marine communities, including vertebrate, invertebrate, and plant species, shall not be degraded.

2. The natural taste, odor, and color of fish, shellfish, or other marine resources used for human consumption shall not be altered.

3. The concentration of organic materials in fish, shellfish, or other marine resources used for human consumption shall not bioaccumulate to levels that are harmful to human health.

D. Radioactivity

Discharge of radioactive waste shall not degrade marine life.

VI. PROVISIONS

A. Standard Provisions

1. **Standard Provisions.** The Discharger shall comply with all Standard Provisions included in Attachment D of this Order.

2. **Regional Water Board Standard Provisions.** The Discharger shall comply with the following provisions:

   a. The Discharger shall comply with all requirements and conditions of this Order. Any permit non-compliance constitutes a violation of the CWA and/or the CWC and is grounds for enforcement action, permit termination, revocation and reissuance, or modification, or for denial of an application for permit renewal, modification, or reissuance.

   b. The Discharger shall comply with all applicable federal, state, and local laws and regulations that pertain to sewage sludge [biosolids] handling, treatment, use, and disposal, including CWA Section 405 and USEPA regulations at 40 CFR Part 257.

   c. All wastewater treatment facilities shall be supervised and operated by persons possessing certificates of appropriate grade pursuant to Title 23, Division 3, Chapter 26 of the California Code of Regulations (CCR).

   d. All proposed new treatment facilities and expansions of existing treatment facilities shall be completely constructed and operable prior to initiation of the discharge from the new or expanded facilities. The Discharger shall submit a certification report for each new treatment facility, expansion of an existing treatment facility, and re-rating of an existing treatment facility. For new treatment facilities and expansions, the certification report shall be prepared by the design engineer. For re-ratings, the certification report shall be prepared by the engineer who evaluated the treatment facility capacity. The certification report shall:

      1) Identify the design capacity of the treatment facility, including the daily and 30-day design capacity,

      2) Certify the adequacy of each component of the treatment facility, and

      3) Contain a requirement-by-requirement analysis, based on acceptable engineering practices, of the process and physical design of the facility to ensure compliance with this Order.

      The signature and engineering license number of the engineer preparing the certification report shall be affixed to the report. If reasonable, the certification report shall be submitted prior to beginning construction. The Discharger shall not initiate a discharge from an existing treatment facility at a daily flow rate in excess of its previously approved design capacity until:

1) The certification report is received by the Executive Officer,

2) The Executive Officer has received written notification of completion of construction (new treatment facilities and expansions only),

3) An inspection of the facility has been made by staff of the Regional Water Board (new treatment facilities and expansions only), and

4) The Executive Officer has provided the Discharger with written authorization to discharge at a daily flow rate in excess of its previously approved design capacity.

e. All waste treatment, containment, and disposal facilities shall be protected against 100-year peak stream flows as defined by the Orange County flood control agency.

f. All waste treatment, containment, and disposal facilities shall be protected against erosion, overland runoff and other impacts resulting from a 100-year, 24-hour storm event.

g. This Order expires on **August 1, 2011**, after which, the terms and conditions of this permit are automatically continued pending issuance of a new permit, provided that all requirements of USEPA's NPDES regulations at 40 CFR 122.6 and the State's regulations at CCR Title 23, Section 2235.4 regarding the continuation of expired permits and waste discharge requirements are met.

h. All wastewater treatment facilities shall be operated and maintained in accordance with the operations and maintenance manual prepared pursuant to the Clean Water Grant Program.

i. A copy of this Order shall be posted at a prominent location at or near all treatment and disposal facilities and shall be available to operating personnel at all times.

j.

B. Monitoring and Reporting Program Requirements

The Discharger shall comply with the Monitoring and Reporting Program (Attachment E) of this Order.

C. Special Provisions

1. Reopener Provisions

a. This Order may be modified, revoked and reissued, or terminated for cause including, but not limited to, the following:

1) Violation of any terms or conditions of this Order.

2) Obtaining this Order by misrepresentation or failure to disclose fully all relevant facts.

3) A change in any condition that requires either a temporary or permanent reduction or elimination of the authorized discharge.

The filing of a request by the Discharger for modifications, revocation and reissuance, or termination of this Order, or a notification of planned change in or anticipated noncompliance with this Order does not stay any condition of this Order.

b. This Order may be reopened and modified, to incorporate in accordance with the provisions set forth in 40 CFR Parts 122 and 124, to include requirements for the implementation of the watershed management approach.

c. This Order may be reopened and modified, in accordance with the provisions set forth in 40 CFR Parts 122 and 124, to include new Minimum Levels (ML).

d. This Order may be reopened and modified to revise effluent limitations as a result of future Basin Plan Amendments, or the adoption of a total maximum daily load allocation (TMDL) for the receiving water.

e. This Order may be reopened upon submission by the Discharger of adequate information, as determined by this Regional Water Board, to provide for alternate dilution credits or mixing zone requirements, as may be appropriate.

f. This Order may be reopened and modified to revise the toxicity language once that language becomes standardized.

g. This Order may be reopened and modified, revoked, and reissued or terminated in accordance with the provisions of 40 CFR sections 122.44, 122.62 to 122.64, 125.62, and 125.64. Causes for taking such actions include, but are not limited to, failure to comply with any condition of this Order and permit, and endangerment to human health or the environment resulting from the permitted activity.

h. This Order may be reopened for modification to include effluent limitations if monitoring establishes that the discharge causes, has the reasonable potential to cause, or contributes to an excursion above water quality objectives.

2. Special Studies, Technical Reports, and Additional Monitoring Requirements

a. Treatment Plant Capacity

Each POTW (SOCWA Jay B. Latham RTP, the SMWD Chiquita WRP, the MNWD 3A RP, and the City of San Clemente RP) shall submit a written report to the Executive Officer within 90 days after the monthly average influent flow rate equals or exceeds 75 percent of the design secondary treatment capacity of their wastewater treatment and/or disposal facilities. Each POTW's senior administrative officer shall sign a letter in accordance with Standard Provision V.B.2.a (Attachment D) which transmits that report and certifies that the policy-making body is adequately informed of the influent flow rate relative to the POTW's design capacity. The report shall include the following:

1) Average influent daily flow for the calendar month; the date on which the maximum daily flow occurred; and the rate of that maximum flow.

2) The POTW's best estimate of when the average daily influent flow for a calendar month will equal or exceed the design capacity of the facilities.

3) The POTW's intended schedule for studies, design, and other steps needed to provide additional capacity for the waste treatment and/or disposal facilities, and/or control the flow rate before the waste flow exceeds the capacity of present units.

b. Spill Reporting Requirements

For purposes of this section, a spill is a discharge of treated or untreated wastewater that occurs at or downstream of the SOCWA Jay B. Latham RTP, the SMWD Chiquita WRP, the MNWD 3A RP, and the City of San Clemente RP headworks, in violation of Discharge Prohibition III.A of this Order, or a discharge of other materials related to treatment and operations of the SOCWA Jay B. Latham RTP, the SMWD Chiquita WRP, the MNWD 3A RP, and the City of San Clemente RP that occurs anywhere throughout the collection and treatment system owned and/or operated by each of the contributing POTW's. This section does not include sanitary sewer overflows reported under separate waste discharge requirements. Each POTW shall report spills in accordance with the following procedures:

1) If a spill results in a discharge of treated or untreated wastewater that is 1,000 gallons or more or results in a discharge of any volume that reaches surface waters, the POTW shall:

   a) Report the spill to the Regional Water Board by telephone, by voice mail, or by FAX within 24 hours from the time the Discharger becomes aware of the spill. The POTW shall inform the Regional Water Board of the date of the spill, spill location and its final destination, time the spill began and ended, estimated total spill volume, and type of spill material.

b) Submit a written report, as well as any additional pertinent information, to the Regional Water Board no later than five days following the starting date of the spill event. The Discharger shall submit the written report using the Sanitary Sewer Overflow Report Form (June 13, 2001) provided under Regional Water Board Order No. 96-04.

2) If a spill results in a discharge of treated or untreated wastewater under 1,000 gallons that reaches surface waters:

a) Report the spill to the Regional Water Board by telephone, by voice mail, or by FAX within 24 hours from the time the Discharger becomes aware of the spill. The Discharger shall inform the Regional Water Board of the date of the spill, spill location and its final destination, time the spill began and ended, estimated total spill volume, and type of spill material.

b) Submit a written report, as well as any additional pertinent information, to the Regional Water Board no later than five days following the starting date of the spill event. The POTW shall submit the written report using the Sanitary Sewer Overflow Report Form (June 13, 2001) provided under Regional Water Board Order No. 96-04.

3) If a spill results in a discharge of treated or untreated wastewater under 1,000 gallons and the discharge does not reach surface waters:

a) The POTW is not required to notify the Regional Water Board within 24 hours.

b) The POTW shall submit a written report, as well as any additional pertinent information, in the monthly self-monitoring report for the month in which the spill occurred. The POTW shall submit the written report using the Sanitary Sewer Overflow Report Form (June 13, 2001) provided under Regional Water Board Order No. 96-04.

4) For spills of material other than treated or untreated wastewater that cause, may cause, or are caused by significant operational failure, or endangers or may endanger human health or the environment, the POTW shall notify the Regional Water Board by telephone, by voice mail, or by FAX within 24 hours from the time the Discharger becomes aware of the spill. The POTW shall inform the Regional Water Board of the date of the spill, spill location and its final destination, time the spill began and ended, estimated total spill volume, and type of spill material.

5) For all spills, the POTW shall submit an annual summary containing the following information for each spill: date of spill, location of spill and its final destination, time the spill began and ended, estimated total spill volume, and type of spill material.

6) The spill reporting requirements contained in this Order do not relieve the POTW of responsibilities to report to other agencies, such as the Office of Emergency Services (OES) and the Orange County Health Care Agency, Environmental Health.

e. Sludge [Biosolids] Disposal Requirements

The requirements contained in this section apply to each POTW that discharges treated municipal wastewater to the Ocean Outfall (SOCWA Jay B. Latham RTP, the SMWD Chiquita WRP, the MNWD 3A RP, and the City of San Clemente RP).

1) The handling, treatment, use, management, and disposal of sludge [biosolids] and solids derived from wastewater treatment must comply with applicable provisions of CWA section 405 and USEPA regulations at 40 CFR Parts 257, 258, 501, and 503, including all monitoring, record keeping, and reporting requirements.

2) Sludge [biosolids] and wastewater solids must be disposed of in a municipal solid waste landfill, reused by land application, or disposed of in a sludge [biosolids]-only landfill in accordance with 40 CFR Parts 258 and 503 and Title 23, Chapter 15 of the CCR. If the POTW desires to dispose of solids and/or sludge [biosolids] in a different manner, a request for permit modification must be submitted to the USEPA and to this Regional Water Board at least 180 days prior to beginning the alternative means of disposal.

3) Sludge [biosolids] that is disposed of in a municipal solid waste landfill must meet the requirements of 40 CFR 25 pertaining to providing information to the public. In the annual self-monitoring report, the POTW shall include the amount of sludge [biosolids] placed in the landfill as well as the landfill to which it was sent.

4) All requirements of 40 CFR 503 and 23 CCR Chapter 15 are enforceable whether or not the requirements of those regulations are stated in an NPDES permit or any other permit issued to the POTW.

5) The POTW shall take all reasonable steps to prevent and minimize any sludge [biosolids] use or disposal in violation of this Order that has a likelihood of adversely affecting human health or the environment.

6) Solids and sludge [biosolids] treatment, storage, and disposal or reuse shall not create a nuisance, such as objectionable odors or flies, and shall not result in ground water contamination.

7) The solids and sludge [biosolids] treatment and storage site shall have adequate facilities to divert surface water runoff from adjacent areas to

protect the boundaries of the site from erosion, and to prevent drainage from the treatment and storage site. Adequate protection is defined as protection, at the minimum, from a 100-year storm and protection from the highest possible tidal stage that may occur.

8) The discharge of sewage sludge [biosolids] and solids shall not cause waste material to be in a position where it is, or can be, conveyed from the treatment and storage sites and deposited in waters of the State.

9) The POTW shall submit an annual report to the USEPA and the Regional Water Board containing monitoring results and pathogen and vector attraction reduction requirements, as specified by 40 CFR 503. The POTW shall also report the quantity of sludge [biosolids] removed from the Facilities and the disposal method. This self-monitoring report shall be postmarked by February 19 of each year and report for the period of the previous calendar year.

d. Pretreatment Program

1) The Discharger shall be responsible and liable for the performance of all Control Authority pretreatment requirements contained in 40 CFR Part 403, including any subsequent revisions to that part. Where 40 CFR Part 403 or subsequent revisions place mandatory actions upon the Discharger but do not specify a timetable for completion, the Discharger shall complete the mandatory actions within 6 months of the issuance date of this Order, or the effective date of the revisions to 40 CFR Part 403, whichever is later. For violations of pretreatment requirements, the Discharger shall be subject to enforcement actions, penalties, fines, and other remedies imposed by the USEPA and/or the Regional Water Board, as provided in the CWA and/or the CWC.

2) The Discharger shall implement and enforce its approved pretreatment program, and all subsequent revisions, which are hereby made enforceable conditions of this Order. The Discharger shall enforce the requirements promulgated pursuant to Sections 307 (b), 307 (c), 307 (d), and 402 (b) of the CWA with timely, appropriate, and effective enforcement actions. The Discharger shall cause industrial users subject to federal categorical standards to achieve compliance no later than the date specified in those requirements, or in the case of a new industrial user, upon commencement of the discharge.

3) The Discharger shall perform the pretreatment functions required by 40 CFR 403, including, but not limited to:

a) Implement the necessary legal authorities as required by 40 CFR 403.8 (f) (1)

b) Enforce the pretreatment requirements under 40 CFR 403.5 and 403.6;

c) Implement the programmatic functions as required by 40 CFR 403.8 (f) (2); and

d) Provide the requisite funding and personnel to implement the pretreatment program, as required by 40 CFR 403.8 (f) (3).

4) By March 1 of each year, the Discharger shall submit an annual report to the Regional Water Board; USEPA Region 9; the State Water Board, Division of Water Quality, Regulations Unit; and the Orange County Health Care Agency, Environmental Health , Hazardous Materials Division, describing its pretreatment activities over the previous calendar year. In the event the Discharger is not in compliance with any condition or requirement of this Order, or any pretreatment compliance inspection/audit requirements, the Discharger shall include the reasons for noncompliance and state how and when it will comply with such conditions and requirements. The annual report shall contain, but not be limited to, the following information:

a) A summary of analytical results from representative flow-proportioned 24-hour composite sampling of the Discharger's influent and effluent for those pollutants known or suspected to be discharged by industrial users that the USEPA has identified under Section 307 (d) of the CWA, which are known or suspected to be discharged by industrial users. This will consist of an annual full priority pollutant scan. Wastewater sampling and analysis shall be performed in accordance with the minimum frequency of analysis required by the Monitoring and Reporting program of this Order (Attachment E). The Discharger shall also provide influent and effluent monitoring data for non-priority pollutants, which the Discharger believes may be causing or contributing to interference or pass through. The Discharger is not required to sample and analyze for asbestos. Sludge sampling and analysis is addressed in Section VI.C.2.e of this Order and Section IX.A of the Monitoring and Reporting Program of this Order (Attachment E). Wastewater sampling and analysis shall be performed in accordance with 40 CFR Part 136.

b) A discussion of upset, interference, or pass through, if any, at the Facilities, which the Discharger knows or suspects were caused by industrial users. The discussion shall include the reasons why the incidents occurred, any corrective actions taken, and, if known, the name and address of the responsible industrial user(s). The discussion shall also include a review of the applicable local pollutant limitations to determine whether any additional limitations or changes to existing limitations, are necessary to prevent pass-through, interference, or non-compliance with sludge disposal requirements.

c) An updated list of the Discharger's significant industrial users (SIUs) including their names and addresses, and a list of deletions, additions and SIU name changes keyed to the previously submitted list. The Discharger shall provide a brief explanation for each change. The list shall identify the SIUs subject to federal categorical standards by specifying which set(s) of standards are applicable to each SIU. The list shall also indicate which SIUs are subject to local limitations;

d) The Discharger shall characterize the compliance status of each SIU by providing a list or table for the following:

(1) Name of SIU and category, if subject to categorical standards;

(2) Type of wastewater treatment or control processes in place;

(3) Number of samples taken by SIU during the year;

(4) Number of samples and inspections by Discharger during the year;

(5) For an SIU subject to discharge requirements for total toxic organics (TTO), whether all required certifications were provided;

(6) A list of pretreatment standards (categorical or local) violated during the year, or any other violations;

(7) Industries in significant non-compliance as defined at 40 CFR 403.12 (f) (2) (vii), at any time during the year;

(8) A summary of enforcement actions or any other actions taken against SIUs during the year. Describe the type of action, final compliance date, and the amount of fines and/or penalties collected, if any. Describe any proposed actions for bringing SIUs into compliance; and

(9) The name(s) of any SIU(s) required to submit a baseline monitoring report and any SIUs currently discharging under a baseline monitoring report.

e) A brief description of any programs the Discharger implements to reduce pollutants from industrial users not classified as SIUs.

f) A brief description of any significant changes in operating the pretreatment program which differ from the previous year, including, but not limited to, changes in the program's administrative structure, local limits, monitoring program, legal authority, enforcement policy, funding, and staffing levels;

g) A summary of the annual pretreatment program budget, including the cost of pretreatment program functions and equipment purchases;

h) A summary of activities to involve and inform the public of the pretreatment program, including a copy of the newspaper notice, if any, required by 40 CFR 403.8 (f) (2) (vii);

i) A description of any changes in sludge disposal methods; and

j) A discussion of any concerns not described elsewhere in the annual report.

5) The Discharger shall submit a semiannual SIU compliance status report to the Regional Water Board, the State Water Board, and USEPA Region 9. The report shall cover the period of January 1 through June 30 and shall be submitted no later than September 1. The report shall identify:

a) The names and addresses of all SIUs which violated any discharge or reporting requirements during the semi-annual reporting period;

b) A description of the violations, including whether the discharge violations were for categorical standards or local limits;

c) A description of the enforcement actions or other actions taken to remedy the non-compliance; and

d) The status of enforcement actions or other actions taken in response to SIU non-compliance identified in previous reports.

6) The Discharger shall continue with its implementation of a Non-Industrial Source Control Program, consisting of a public education program designed to minimize the entrance of non-industrial toxic pollutants and pesticides into the sanitary sewer system. The Program shall be reviewed periodically and addressed in the annual report.

7) The Discharger shall re-evaluate its local limits with respect to the effluent limitations and reporting requirements included in this Order as well as all other applicable regulations. The Regional Water Board recommends that the Discharger use the USEPA *Local Limits Guidance Manual,* July 2004 in the re-evaluation effort.

a) The Discharger shall submit a local limits re-evaluation plan within 6 weeks after adoption of this permit.

b) The Discharger shall submit a status report on the re-evaluation 4 months after adoption of this permit.

c) The Discharger shall submit a final re-evaluation report to the Regional Water Board 9 months after adoption of this permit.

e. Toxicity Reduction Evaluation (TRE)

1) The Discharger shall develop a Toxicity Reduction Evaluation (TRE) workplan in accordance with the TRE procedures established by the USEPA in the following guidance manuals:

a) *Generalized Methodology for Conducting Industrial Toxicity Reduction Evaluations* (EPA/600/2-88/070).

b) *Toxicity Identification Evaluation, Phase I* (EPA/600/6-91/005F).

c) *Methods for Aquatic Toxicity Identification Evaluations, Phase II* (EPA/600/R-92/080).

d) *Methods for Aquatic Toxicity Identification Evaluations, Phase III* (EPA/600/R-92/081).

2) The Discharger shall submit the TRE workplan to the Regional Water Board within 180 days of the adoption of this Order. The TRE workplan shall be subject to the approval of the Regional Water Board and shall be modified as directed by the Regional Water Board.

3) If the toxicity effluent limitations or performance goal identified in Section IV.B of this Order are exceeded, then within 15 days of the exceedance, the Discharger shall begin conducting six additional toxicity tests over a 6-month (at least one sample per calendar month, for a total of two samples per calendar month) period and provide the results to the Regional Water Board. The additional monthly toxicity tests will be incorporated into the semiannual discharge monitoring reports submitted pursuant to MRP No. R9-2006-0054.

4) If the additional monthly tests indicate that toxicity effluent limitations are being consistently exceeded (at least three exceedances out of the six tests), the Regional Water Board may recommend that the Discharger conduct a TRE and a Toxic Identification Evaluation (TIE), as identified in the approved TRE workplan.

5) Within 30 days of completion of the TRE/TIE, the Discharger shall submit the results of the TRE/TIE, including a summary of the findings, data generated, a list of corrective actions necessary to achieve consistent compliance with the toxicity effluent limitation of this Order or conformance with the toxicity performance goal of this Order and prevent recurrence of exceedances of the limitation or performance goal, and a time schedule for implementation of such corrective actions. The corrective actions and time schedule shall be modified at the direction of the Executive Officer.

VII. COMPLIANCE DETERMINATION AND ENFORCEMENT PROVISIONS

Compliance with the effluent limitations contained in Section IV of this Order will be determined as specified below:

A. **Average Monthly Effluent Limitation (AMEL).**
The discharger shall determine the average monthly effluent value (AMEV) for a given parameter by calculating the arithmetic average of all effluent values (DEVs) for each parameter within each calendar month. The AMEV calculation for a given calendar month shall not include DEVs from any other month. If only a single DEV is obtained for a parameter during a calendar month, that DEV shall be considered the AMEV for that parameter for that calendar month. The AMEV shall be attributed to each day of the calendar month for determinations of compliance with the AMEL for a given parameter for that given calendar month. For any calendar month during which no DEV is obtained, the AMEV cannot be determined for that calendar month.

B. **Average Weekly Effluent Limitation (AWEL).**
The discharger shall determine the average weekly effluent value (AWEV) for a given parameter by calculating the arithmetic average of all daily effluent values (DEVs) for each parameter within each calendar week (Sunday through Saturday). The AWEV calculations for a given calendar week shall not include DEVs from any other calendar week. If only a single DEV is obtained for a parameter during a calendar week, that DEV shall be considered the AWEV for that parameter for that calendar week. The AWEV shall be attributed to each day of the calendar week for determination of compliance with the Average Weekly Effluent Limitation (AWEL) for a given parameter for that given calendar week. For any calendar week during which no DEV is obtained, the AWEV cannot be determined for that calendar week.

C. **Maximum Daily Effluent Limitation (MDEL).**
The discharger shall determine the daily effluent value (DEV) for a given parameter from the results of a flow-weighted 24-hour composite sample collected during a calendar day (12:00 am through 11:59 pm) or any continuous 24-hour period that ends on and reasonably represents a given calendar day for purposes of sampling. Upon approval by the Regional Water Board, the discharger may also determine the DEV for a given parameter form the arithmetic mean of results from one or more flow-weighted grab samples taken over the course of one calendar day or a 24-hour period that reasonably represents the calendar day. The DEV shall not include results from any sample outside of the 24-hour period that represents the calendar day. The DEV shall be used for determination of compliance with the Maximum Daily Effluent Limit (MDEL) for a given parameter for that given calendar day. A DEV cannot be determined for any calendar day during which a 24-hour flow-weighted composite sample, or flow-weighted grab samples in lieu of a 24-hour composite sample, is not obtained.

D. **Instantaneous Minimum Effluent Limitation.**
The discharger shall determine the instantaneous effluent value (IEV) for a given parameter from the results of any grab sample. The IEV for a given grab sample shall not include IEVs from any other grab sample. The IEV shall be used for determination of compliance with the Instantaneous Minimum Effluent Limitation for a given parameter for each grab sample.

E. **Instantaneous Maximum Effluent Limitation.**
The discharger shall determine the instantaneous effluent value (IEV) for a given parameter from the results of any grab sample. The IEV for a given grab sample shall not include IEVs from any other grab sample. The IEV shall be used for determination of compliance with the Instantaneous Minimum Effluent Limitation for a given parameter for each grab sample.

F. **Six-month Median Effluent Limitation.**
The discharger shall determine the six-month median effluent value (SMEV) for a given parameter by calculating the statistical median of all daily effluent values (DEVs) for each parameter within each six-month calendar period (January-June and July-December). The SMEV determination for a given six-month calendar period shall not include DEVs from any other six-month calendar period. If only a single DEV is obtained for a parameter during a six-month calendar period, that DEV shall be considered the SMEV for that parameter for that given six-month calendar period. The SMEV shall be attributed to each day of the six-month calendar period for determination of compliance with the six-month median effluent limitation (SMEL) for a given parameter for each day of that given six-month calendar period. The SMEV cannot be determined for any six-month calendar period during which no DEV is obtained.

G. **Mass Emission Rate.**

1. When applicable, Tthe mass emission rate (MER), in pounds per day, shall be obtained from the following calculation for any calendar day:

   Mass Emission Rate (lb/Day) = 8.34 x Q x C

   in which Q and C are the flow rate in MGD and the constituent concentration in mg/L, respectively, and 8.34 is a conversion factor. If a composite sample is taken, then C is the concentration measured in the composite sample and Q is the average flow rate occurring during the period over which the samples are composited.

2. When the concentration of a constituent in an effluent sample is determined to be "ND" or "DNQ", the corresponding MER determined from that sample concentration shall also be reported as "ND" or "DNQ."

H. **Percent Removal.**
Compliance with the secondary treatment standard for monthly average percent removal of biochemical oxygen demand, carbonaceous biochemical oxygen demand, and total suspended solids pursuant to 40 CFR Part 133 shall be determined separately for each wastewater treatment facility discharging through an outfall. For each wastewater treatment facility, the monthly average percent removal is the average of the calculated daily discharge percent removals only for days on which the constituent concentration is monitored in both the influent and effluent of

the wastewater treatment facility at locations specified in the Monitoring and Reporting Program (Attachment E) within a calendar month.

The percent removal for each day shall be calculated according to the following equation:

Daily discharge percent removal =

$$\frac{\text{Influent concentration} - \text{Effluent concentration}}{\text{Influent concentration}} \; x\,100$$

I. **Ocean Plan Provisions for Table B Constituents.**

1. Compliance Determination

   Sufficient sampling and analysis shall be required to determine compliance with the effluent limitation.

   a. Compliance with Single-Constituent Effluent Limitations

      The Discharger shall be deemed out of compliance with an effluent limitation or discharge specification if the concentration of the constituent in the monitoring sample is greater than the effluent limitation or discharge specification and greater than or equal to the ML.

   b. Compliance with Effluent Limitations expressed as a Sum of Several Constituents

      Dischargers are out of compliance with an effluent limitation that applies to the sum of a group of chemicals (e.g., PCB's) if the sum of the individual pollutant concentrations is greater than the effluent limitation. Individual pollutants of the group will be considered to have a concentration of zero if the constituent is reported as ND or DNQ.

   c. Multiple Sample Data Reduction

      The concentration of the pollutant in the effluent may be estimated from the result of a single sample analysis or by a measure of central tendency (arithmetic mean, geometric mean, median, etc.) of multiple sample analyses when all sample results are quantifiable (i.e., greater than or equal to the reported ML). When one or more sample results are reported as ND or DNQ, the central tendency concentration of the pollutant shall be the median (middle) value of the multiple samples. If, in an even number of samples, one or both of the middle values is ND or DNQ, the median will be the lower of the two middle values.

2. Pollutant Minimization Program

   a. Pollutant Minimization Program Goal

      The goal of the Pollutant Minimization Program is to reduce all potential sources of a pollutant through pollutant minimization (control) strategies, including pollution prevention measures, in order to maintain the effluent concentration at or below the effluent limitation. Pollution prevention measures may be particularly appropriate for persistent bioaccumulative priority pollutants where there is evidence that beneficial uses are being impacted. The completion and implementation of a Pollution Prevention Plan, required in accordance with CWC Section 13263.3 (d) will fulfill the Pollution Minimization Program requirements in this section.

   b. Determining the need for a Pollutant Minimization Program
      i. The Discharger must develop and conduct a Pollutant Minimization Program if all of the following conditions are true:

         a) The calculated effluent limitation is less than the reported ML.
         b) The concentration of the pollutant is reported as DNQ.
         c) There is evidence showing that the pollutant is present in the effluent above the calculated effluent limitation.

      ii. Alternatively, the Discharger must develop and conduct a Pollutant Minimization Program if all of the following conditions are true:

         a) The calculated effluent limitation is less than the Method Detection Limit.
         b) The concentration of the pollutant is reported as ND.
         c) There is evidence showing that the pollutant is present in the effluent above the calculated effluent limitation.

   c. Regional Water Board may include special provisions in the discharge requirements to require the gathering of evidence to determine whether the pollutant is present in the effluent at levels above the calculated effluent limitation. Examples of evidence may include:

      i. Health advisories for fish consumption,
      ii. Presence of whole effluent toxicity,
      iii. Results of benthic or aquatic organism tissue sampling,
      iv. Sample results from analytical methods more sensitive than methods included in the permit,
      v. The concentration of the pollutant is reported as DNQ and the effluent limitation is less than the MDL.

d. Elements of a Pollutant Minimization Program

The Regional Board may consider cost-effectiveness when establishing the requirements of a Pollutant Minimization Program. The program shall include actions and submittals acceptable to the Regional Water Board including, but not limited to, the following:

i. An annual review and semi-annual monitoring of potential sources of the reportable pollutant, which may include fish tissue monitoring and other biouptake sampling;
ii. Quarterly monitoring for the reportable pollutant in the influent to the wastewater treatment system;
iii. Submittal of a control strategy designed to proceed toward the goal of maintaining concentrations of the reportable pollutant in the effluent at or below the calculated effluent limitation;
iv. Implementation of appropriate cost-effective control measures for the pollutant, consistent with the control strategy; and,
v. An annual status report that shall be sent to the Regional Water Board including:
   a) All Pollutant Minimization Program monitoring results for the previous year;
   b) A list of potential sources of the reportable pollutant;
   c) A summary of all action taken in accordance with the control strategy; and,
   d) A description of actions to be taken in the following year.

J. **Acute Toxicity.**

1. Conformance with the Acute Toxicity performance goal in Section IV.B of this Order for Outfall 001 shall be determined using an established protocol, e.g., American Society for Testing Materials (ASTM), USEPA, American Public Health Association, or State Board. Acute toxicity shall be expressed in Toxic Units Acute (TU_a), where:

$$TU_a = 100 / \text{96-hr LC50}$$

Where LC50 is the Lethal Concentration 50%, and the percent waste giving 50% survival of test organisms. LC50 shall be determined by static or continuous flow bioassay techniques using standard test species. If specific identifiable substances in wastewater can be demonstrated by the discharger as being rapidly rendered harmless upon discharge to the marine environment, but not as a result of dilution, the LC50 may be determined after the test samples are adjusted to remove the influence of those substances.

2. When it is not possible to measure the 96-hour LC50 due to greater than 50% survival of the test species in 100% waste, the toxicity concentration shall be calculated by the following:

$$TU_a = \log (100-S) / 1.7$$

where S is the percentage survival in 100% waste. If S > 99, TU_a shall be reported as zero.

3. In addition, when there is greater than 50% survival of the test species in 100% waste, the percentage survival in 100% waste sample shall be statistically compared to the percentage survival in the test control sample, and the acute toxicity result shall also be reported as follows:

   a. "Pass" when the percentage survival in 100% waste is not statistically different (based on a 0.05 significance level) from the percentage survival in the test control sample.

   b. "Fail" when the percentage survival in 100% waste is less than and statistically different (based on a 0.05 significance level) from the percentage survival in the test control sample.

K. **Chronic Toxicity.**
Chronic toxicity is used to measure the acceptability of waters for supporting a healthy marine biota until approved methods are developed to evaluate biological response. Compliance with the Chronic Toxicity effluent limitation established in Section IV.B of this Order for Outfall 001 shall be determined using critical life stage toxicity tests in accordance with procedures prescribed by the Ocean Plan and restated in MRP R9-2006-0054. Chronic toxicity shall be expressed as Toxic Units Chronic (TU_c), where:

$$TU_c = 100 / NOEL$$

where NOEL is the No Observed Effect Level and is expressed as the maximum percent of effluent that causes no observable effect on a test organism, as determined by the result of a critical life stage toxicity test

L. **Bacterial Standards and Analysis.**

1. The geometric mean used for determining compliance with bacterial standards is calculated with the following equation:

$$\text{Geometric Mean} = (C_1 \times C_2 \times \ldots \times C_n)^{1/n}$$

   where n is the number of days samples were collected during the period and C is the concentration of bacteria (MPN/100 mL) found on each day of sampling.

2. For all bacterial analyses, sample dilutions should be performed so the range of values extends from 2 to 16,000 MPN (most probable number). The detection

methods used for each analysis shall be reported with the results of the analysis. Detection methods used for coliforms (total and fecal) shall be those presented in the most recent edition of Standard Methods for the Examination of Water and Wastewater or any improved method determined by the Regional Water Board (and approved by USEPA) to be appropriate. Detection methods used for enterococcus shall be those presented in USEPA publication EPA 600/4-85/076, 40 CFR 136, and any other approved method approved by the Regional Water Board. Test Methods for Escherichia coli and Enterococci in Water by Membrane Filter Procedure or any improved method determined by the Regional Water Board to be appropriate.

M. **Single Operational Upset.**
A single operational upset (SOU) that leads to simultaneous violations of more than one pollutant parameter shall be treated as a single violation and limits the Discharger's liability in accordance with the following conditions:

1. A single operational upset is broadly defined as a single unusual event that temporarily disrupts the usually satisfactory operation of a system in such a way that it results in violation of multiple pollutant parameters.

2. A Discharger may assert SOU to limit liability only for those violations which the Discharger submitted notice of the upset as required in Attachment D Standard Provisions – Reporting V.E.2.b.

3. For purposes outside of CWC Section 13385 (h) and (i), determination of compliance and civil liability (including any more specific definition of SOU, the requirements for Dischargers to assert the SOU limitation of liability, and the manner of counting violations) shall be in accordance with the USEPA Memorandum "Issuance of Guidance Interpreting Single Operational Upset" (September 27, 1989).

4. For purposes of CWC Section 13385 (h) and (i), determination of compliance and civil liability (including any more specific definition of SOU, the requirements for Dischargers to assert the SOU limitation of liability, and the manner of counting violations) shall be in accordance with CWC Section 13385 (f)(2).

5. For purposes of CWC Section 13385 (h) and (i), determination of compliance and civil liability (including any more specific definition of SOU, the requirements for Dischargers to assert the SOU limitation of liability, and the manner of counting violations) shall be in accordance with CWC Section 13385 (f)(2).

ATTACHMENT A – DEFINITIONS

Anti-Backsliding. Provisions in the CWA and USEPA regulations [CWA 303 (d) (4); CWA 402 (o); CFR 122.44 (l)] that require a reissued permit to be as stringent as the previous permit with some exceptions.

Antidegradation. Policies which ensure protection of water quality for a particular water body where the water quality exceeds levels necessary to protect fish and wildlife propagation and recreation on and in the water. This also includes special protection of waters designated as outstanding natural resource waters. Antidegradation plans are adopted by the State to minimize adverse effects on water.

Applicable Standards and Limitations means all State, interstate, and federal standards and limitations to which a discharge, a sewage sludge [biosolids] use or disposal practice, or a related activity is subject under the CWA, including effluent limitations, water quality standards, standards of performance, toxic effluent standards or prohibitions, best management practices, pretreatment standards, and standards for sewage sludge [biosolids] use or disposal under sections 301, 302, 303, 304, 306, 307, 308, 403 and 405 of CWA.

Areas of Special Biological Significance (ASBS) are those areas designated by the State Water Board as requiring protection of species or biological communities to the extent that alteration of natural water quality is undesirable.

Average Monthly Effluent Limitation (AMEL): the highest allowable average of daily discharges over a calendar month, calculated as the sum of all daily discharges measured during a calendar month divided by the number of daily discharges measured during that month.

Average Weekly Effluent Limitation (AWEL): the highest allowable average of daily discharges over a calendar week (Sunday through Saturday), calculated as the sum of all daily discharges measured during a calendar week divided by the number of daily discharges measured during that week.

Beneficial Uses of the waters of the State that may be protected against quality degradation include, but are not limited to, domestic, municipal, agricultural and industrial supply; power generation; recreation; aesthetic enjoyment; navigation; and preservation and enhancement of fish, wildlife, and other aquatic resources or preserves.

Best Management Practices (BMPs) means schedules of activities, prohibitions of practices, maintenance procedures, and other management practices to prevent or reduce the pollution of waters of the United States. BMPs also include treatment requirements, operating procedures, and practices to control plant site runoff, spillage or leaks, sludge [biosolids] or waste disposal, or drainage from raw material storage.

Best Professional Judgment (BPJ). The method used by permit writers to develop technology-based NPDES permit conditions on a case-by-case basis using all reasonably available and relevant data.

Bioaccumulative pollutants are those substances taken up by an organism from its surrounding medium through gill membranes, epithelial tissue, or from food and subsequently concentrated and retained in the body of the organism.

Bioassay. A test used to evaluate the relative potency of a chemical or a mixture of chemicals by comparing its effect on a living organism with the effect of a standard preparation on the same type of organism.

Biochemical Oxygen Demand (BOD). A measurement of the amount of oxygen utilized by the decomposition of organic material, over a specified time period (usually 5 days) in a wastewater sample; it is used as a measurement of the readily decomposable organic content of a wastewater.

Biosolids. Sewage sludge that is used or disposed through land application, surface disposal, incineration, or disposal in a municipal solid waste landfill. Sewage sludge is defined as solid, semi-solid, or liquid untreated residue generated during the treatment of domestic sewage in a treatment facility.

Bypass. The intentional diversion of wastestreams from any portion of a treatment (or pretreatment) facility.

Carbonaceous Biochemical Oxygen Demand (CBOD). The measurement of oxygen required for carbonaceous oxidation of a nonspecific mixture of organic compounds. Interference caused by nitrifying bacteria in the standard 5-day BOD test is eliminated by suppressing the nitrification reaction.

Composite Sample. Sample composed of two or more discrete samples of at least 100 milliliters collected at periodic intervals during the operating hours of a facility over a 24-hour period. The aggregate sample will reflect the average water quality covering the compositing or sample period. For volatile pollutants, aliquots must be combined in the laboratory immediately before analysis. The composite must be flow proportional; either the time interval between each aliquot or the volume of each aliquot must be proportional to either stream flow at the time of sampling or the total stream flow since the collection of the previous aliquot. Aliquots may be collected manually or automatically.

Conventional Pollutants. Pollutants typical of municipal sewage, and for which municipal secondary treatment plants are typically designed; defined at 40 CFR 401.16 as BOD, TSS, fecal coliform bacteria, oil and grease, and pH.

Degrade (Degradation). Degradation shall be determined by comparison of the waste field and reference site(s) for characteristic species diversity, population density, contamination, growth anomalies, debility, or supplanting of normal species by undesirable plant and animal

species. Degradation occurs if there are significant differences in any of three major biotic groups, namely, demersal fish, benthic invertebrates, or attached algae. Other groups may be evaluated where benthic species are not affected, or are not the only ones affected.

Dilution Credit is the amount of dilution granted to a discharge in the calculation of a water quality-based effluent limitation, based on the allowance of a specified mixing zone. It is calculated from the dilution ratio or determined through conducting a mixing zone study or modeling of the discharge and receiving water.

Dilution Ratio is the critical low flow of the upstream receiving water divided by the flow of the effluent discharged.

Discharge when used without qualification means the discharge of a pollutant. Discharge of a pollutant means:

1. Any addition of any pollutant or combination of pollutants to waters of the United States from any point source, or

2. Any addition of any pollutant or combination of pollutants to the waters of the contiguous zone or the ocean from any point source other than a vessel or other floating craft that is being used as a means of transportation.

This definition includes additions of pollutants into waters of the United States from: surface runoff which is collected or channeled by man; discharges through pipes, sewers, or other conveyances owned by a state, municipality, or other person which do not lead to a treatment works. This term does not include an addition of pollutants by any indirect Discharger.

Discharge Monitoring Report (DMR) means the USEPA uniform form, including any subsequent additions, revisions, or modifications for the reporting of self-monitoring results by permittees. DMRs must be used by approved states as well as by USEPA. The USEPA will supply DMRs to any approved state upon request. The USEPA national forms may be modified to substitute the state agency name, address, logo, and other similar information, as appropriate, in place of USEPA's.

Effluent Limitation means any restriction imposed by an Order on quantities, discharge rates, and concentrations of pollutants that are discharged from point sources into waters of the United States, the waters of the contiguous zone, or the ocean.

Grab Sample. An individual sample of at least 100 milliliters collected at a randomly selected time over a period not exceeding 15 minutes. The sample is taken from a waste stream on a one-time basis without consideration of the flow rate of the waste stream and without consideration of time of day.

Instantaneous Maximum Effluent Limitation: the highest allowable value for any single grab sample or aliquot (i.e., each grab sample or aliquot is independently compared to the instantaneous maximum limitation).

Instantaneous Minimum Effluent Limitation: the lowest allowable value for any single grab sample or aliquot (i.e., each grab sample or aliquot is independently compared to the instantaneous minimum limitation).

Maximum Daily Effluent Limitation (MDEL): the highest allowable daily discharge of a pollutant.

Method Detection Limit (MDL) is the minimum concentration of a substance that can be measured and reported with 99 percent confidence that the analyte concentration is greater than zero.

Minimum Level (ML) is the concentration at which the entire analytical system must give a recognizable signal and acceptable calibration point. The ML is the concentration in a sample that is equivalent to the concentration of the lowest calibration standard analyzed by a specific analytical procedure, assuming that all the method specified sample weights, volumes, and processing steps have been followed.

Sanitary Sewer. A pipe or conduit (sewer) intended to carry wastewater or water-borne wastes from homes, businesses, and industries to the POTW.

Sanitary Sewer Overflows (SSO). Untreated or partially treated sewage overflows from a sanitary sewer collection system.

Secondary Treatment Standards. Technology-based requirements for direct discharging municipal sewage treatment facilities. Standards are based on a combination of physical and biological processes typical for the treatment of pollutants in municipal sewage. Standards are expressed as a minimum level of effluent quality in terms of: BOD_5, total suspended solids (TSS), and pH (except as provided for special considerations and treatment equivalent to secondary treatment).

Self-Monitoring Report (SMR). Any of the periodic monitoring reports required to be submitted by the Discharger to the Regional Water Board to report the results of monitoring conducted by the Discharger as required in Attachment E – Monitoring and Reporting Program.

Six-month Median Effluent Limitation: the highest allowable median of all daily discharges, based on 24-hour flow-weighted composite samples, for any 180-day period.

Surface Waters include navigable waters, rivers, streams (including ephemeral streams), lakes, playa lakes, natural ponds, bays, the Pacific Ocean, lagoons, estuaries, man-made canals, ditches, dry arroyos, mudflats, sandflats, wet meadows, wetlands, swamps, marshes, sloughs and water courses, and storm drains tributary to surface waters. Surface Waters include waters of the United States as used in the federal CWA (see 40 CFR 122.2).

Technology-Based Effluent Limit. A permit limit for a pollutant that is based on the capability of a treatment method to reduce the pollutant to a certain concentration.

Toxic Pollutant. Pollutants or combinations of pollutants, including disease-causing agents, which after discharge and upon exposure, ingestion, inhalation or assimilation into any organism, either directly from the environment or indirectly by ingestion through food chains, will, on the basis of information available to the Administrator of USEPA, cause death, disease, behavioral abnormalities, cancer, genetic mutations, physiological malfunctions, (including malfunctions in reproduction) or physical deformations, in such organisms or their offspring. Toxic pollutants also include those pollutants listed by the Administrator under CWA Section 307 (a) (1) or any pollutant listed under Section 405 (d) which relates to sludge [biosolids] management.

Toxicity Reduction Evaluation (TRE). A site-specific study conducted in a stepwise process designed to identify the causative agent(s) of effluent toxicity, isolate the sources of toxicity, evaluate the effectiveness of toxicity control options, and then confirm the reduction in effluent toxicity.

Upset is defined as (a) An unusual event that temporarily disrupts the usually satisfactory operation of a system. This definition constitutes the plain meaning or broad definition of the term “upset.” (b) An event more narrowly defined at 40 CFR 122.41 (n)(1) and which belongs to a subset of events that fit the definition of the term “upset” provided in (a).

Water Quality Control Plan consists of a designation or establishment for the waters within a specified area of all of the following:

1. Beneficial uses to be protected.
2. Water quality objectives.
3. A program of implementation needed for achieving water quality objectives.

Water Quality Objectives means the limits or levels of water quality constituents or characteristics which are established for the reasonable protection of beneficial uses of water or the prevention of nuisance within a specific area.

Whole Effluent Toxicity (WET). The total toxic effect of an effluent measured directly with a toxicity test.

ATTACHMENT B – MAP

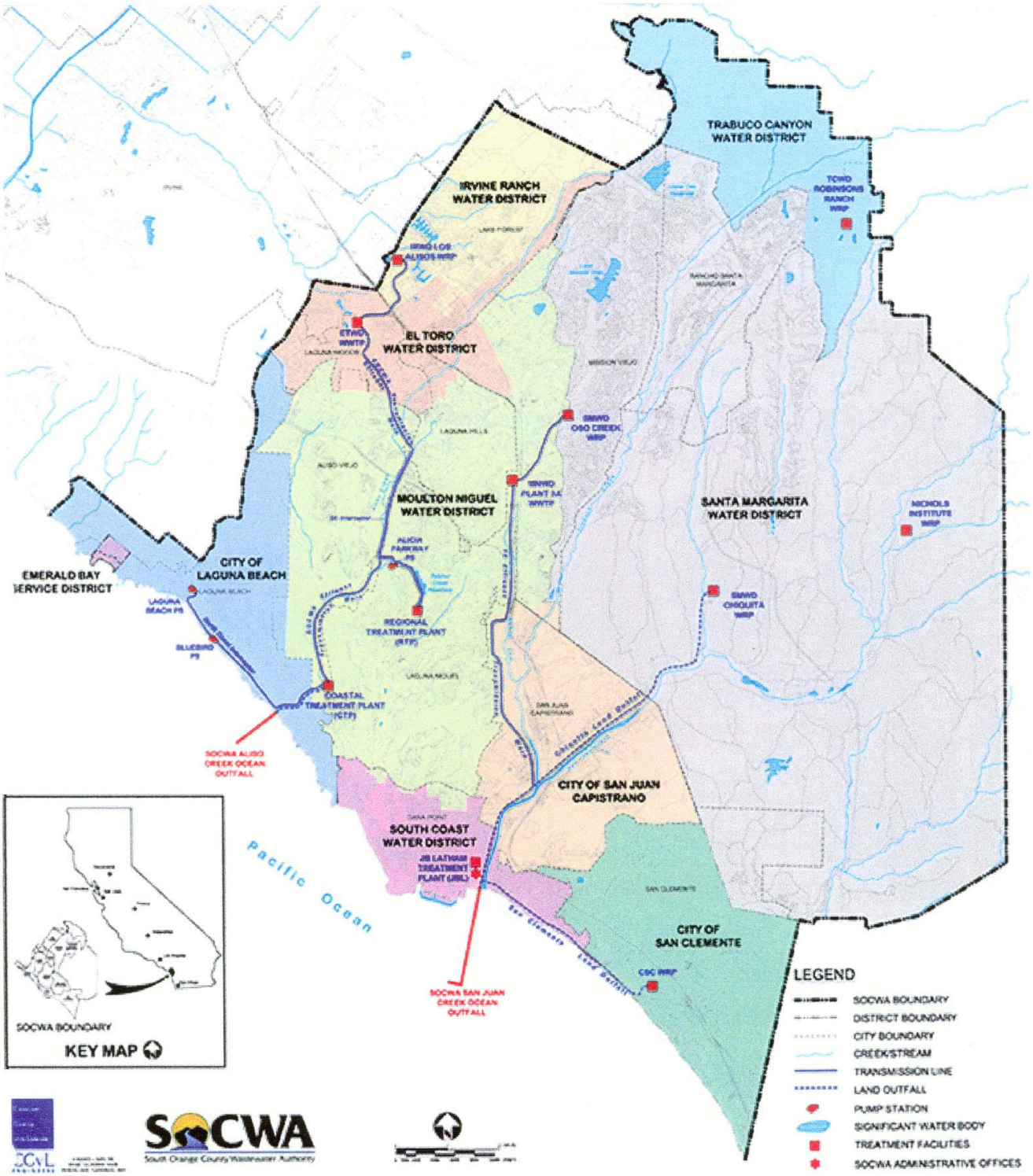

ATTACHMENT C – FLOW SCHEMATIC

The following pages provide the process flow schematics for the SOCWA Jay B. Latham RTP, the SMWD Chiquita Water RP, the MNWD 3A RP, and the City of San Clemente RP.

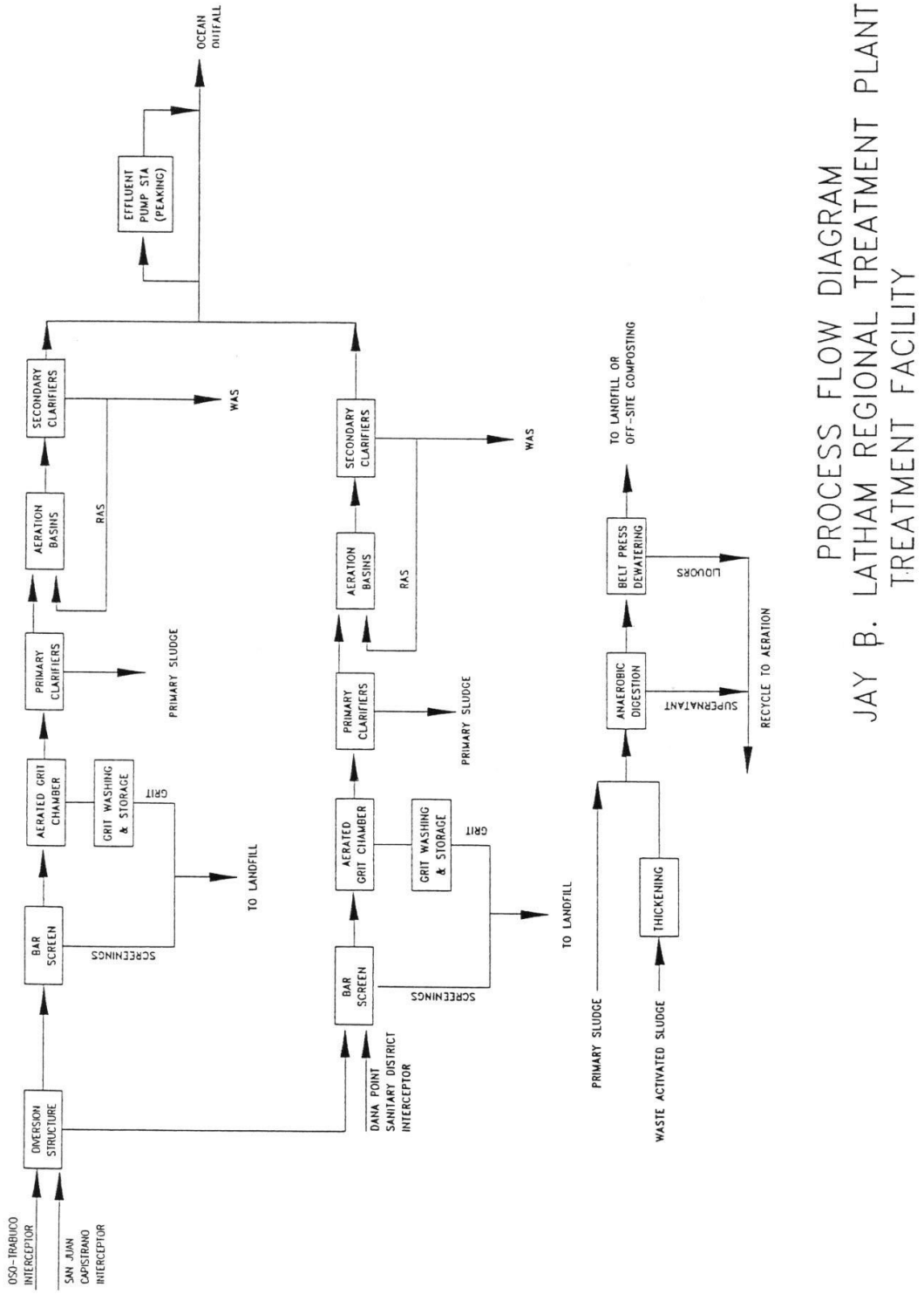

PROCESS FLOW DIAGRAM
JAY B. LATHAM REGIONAL TREATMENT PLANT
TREATMENT FACILITY

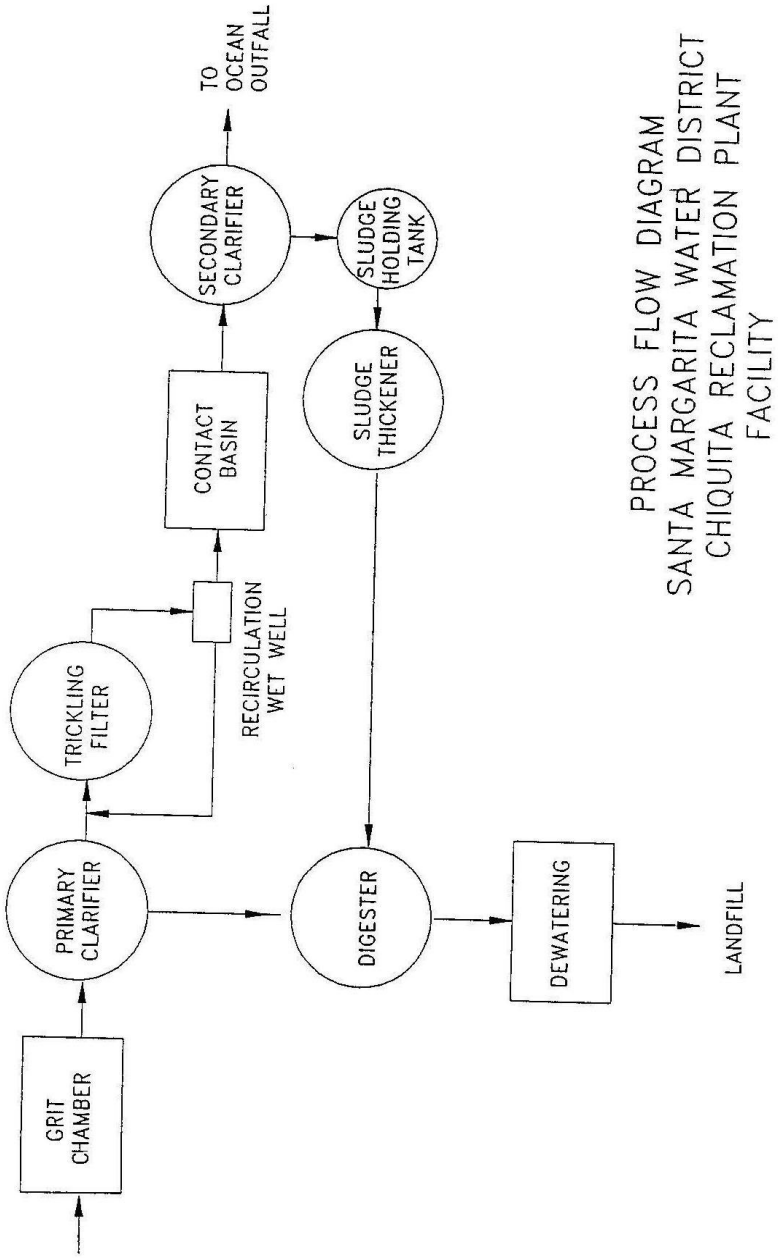

PROCESS FLOW DIAGRAM
SANTA MARGARITA WATER DISTRICT
CHIQUITA RECLAMATION PLANT
FACILITY

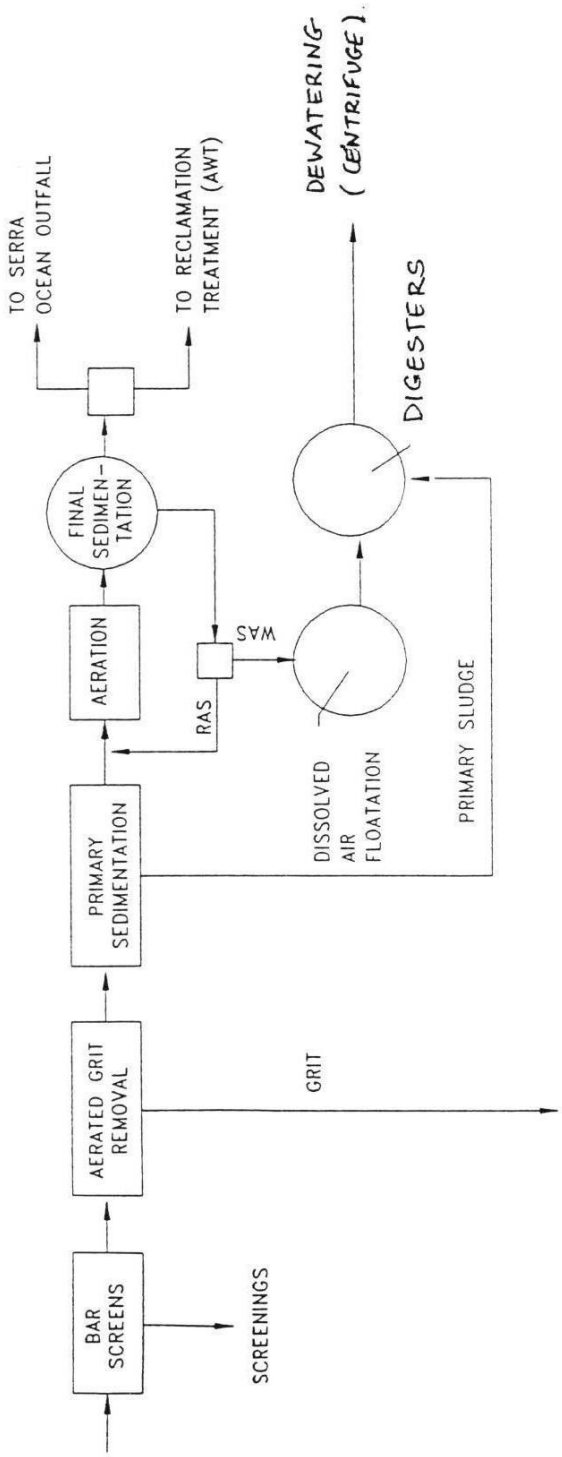

PROCESS FLOW DIAGRAM
MOULTON NIGUEL PLANT 3A
FACILITY

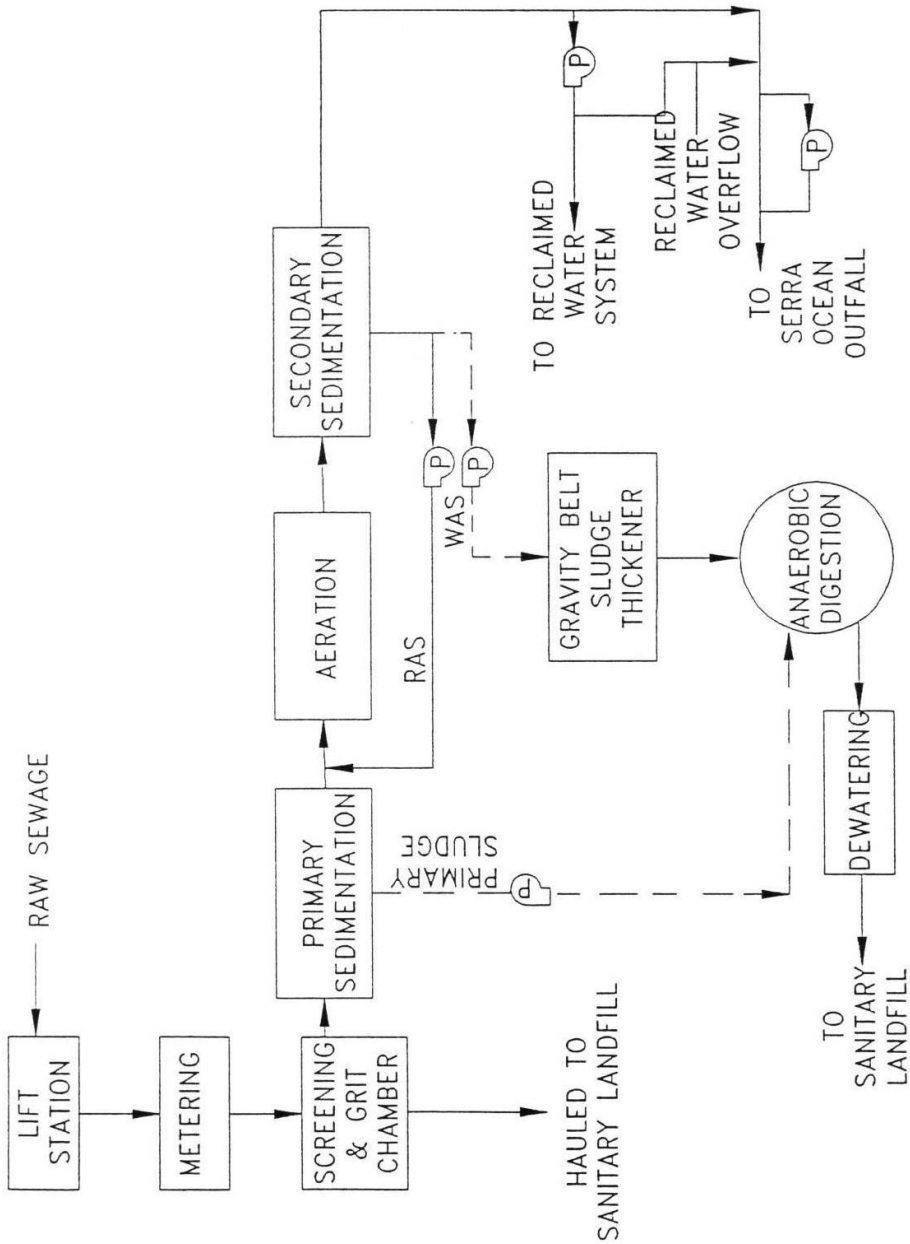

PROCESS FLOW DIAGRAM
SAN CLEMENTE WATER RECLAMATION PLANT
TREATMENT FACILITY

ATTACHMENT D – FEDERAL STANDARD PROVISIONS

I. STANDARD PROVISIONS – PERMIT COMPLIANCE

A. Duty to Comply

1. The Discharger must comply with all of the conditions of this Order. Any noncompliance constitutes a violation of the Clean Water Act (CWA) and the California Water Code (CWC) and is grounds for enforcement action, for permit termination, revocation and reissuance, or denial of a permit renewal application [*40 CFR §122.41(a)*].

2. The Discharger shall comply with effluent standards or prohibitions established under Section 307(a) of the Clean Water Act for toxic pollutants and with standards for sewage sludge use or disposal established under Section 405(d) of the CWA within the time provided in the regulations that establish these standards or prohibitions, even if this Order has not been modified to incorporate the requirement [*40 CFR §122.41(a)(1)*].

B. Need to Halt or Reduce Activity Not a Defense

It shall not be a defense for a Discharger in an enforcement action that it would have been necessary to halt or reduce the permitted activity in order to maintain compliance with the conditions of this Order [*40 CFR §122.41(c)*].

C. Duty to Mitigate

The Discharger shall take all reasonable steps to minimize or prevent any discharge or sludge use or disposal in violation of this Order that has a reasonable likelihood of adversely affecting human health or the environment [*40 CFR §122.41(d)*].

D. Proper Operation and Maintenance

The Discharger shall at all times properly operate and maintain all facilities and systems of treatment and control (and related appurtenances) which are installed or used by the Discharger to achieve compliance with the conditions of this Order. Proper operation and maintenance also includes adequate laboratory controls and appropriate quality assurance procedures. This provision requires the operation of backup or auxiliary facilities or similar systems that are installed by a Discharger only when necessary to achieve compliance with the conditions of this Order [*40 CFR §122.41(e)*].

E. Property Rights

1. This Order does not convey any property rights of any sort or any exclusive privileges [*40 CFR §122.41(g)*].

2. The issuance of this Order does not authorize any injury to persons or property or invasion of other private rights, or any infringement of State or local law or regulations [*40 CFR §122.5(c)*].

F. Inspection and Entry

The Discharger shall allow the Regional Water Board, State Water Board, United States Environmental Protection Agency (USEPA), and/or their authorized representatives (including an authorized contractor acting as their representative), upon the presentation of credentials and other documents, as may be required by law, to [*40 CFR §122.41(i)*] [*CWC 13383(c)*]:

1. Enter upon the Discharger's premises where a regulated facility or activity is located or conducted, or where records are kept under the conditions of this Order [*40 CFR §122.41(i)(1)*];

2. Have access to and copy, at reasonable times, any records that must be kept under the conditions of this Order [*40 CFR §122.41(i)(2)*];

3. Inspect and photograph, at reasonable times, any facilities, equipment (including monitoring and control equipment), practices, or operations regulated or required under this Order [*40 CFR §122.41(i)(3)*];

4. Sample or monitor, at reasonable times, for the purposes of assuring Order compliance or as otherwise authorized by the CWA or the CWC, any substances or parameters at any location [*40 CFR §122.41(i)(4)*].

G. Bypass

1. Definitions

   a. “Bypass” means the intentional diversion of waste streams from any portion of a treatment facility [*40 CFR §122.41(m)(1)(i)*].

   b. “Severe property damage” means substantial physical damage to property, damage to the treatment facilities, which causes them to become inoperable, or substantial and permanent loss of natural resources that can reasonably be expected to occur in the absence of a bypass. Severe property damage does not mean economic loss caused by delays in production [*40 CFR §122.41(m)(1)(ii)*].

2. Bypass not exceeding limitations – The Discharger may allow any bypass to occur which does not cause exceedances of effluent limitations, but only if it is for essential maintenance to assure efficient operation. These bypasses are not subject to the provisions listed in Standard Provisions – Permit Compliance I.G.3 and I.G.5 below [*40 CFR §122.41(m)(2)*].

3. Prohibition of bypass – Bypass is prohibited, and the Regional Water Board may take enforcement action against a Discharger for bypass, unless [*40 CFR §122.41(m)(4)(i)*]:

    a. Bypass was unavoidable to prevent loss of life, personal injury, or severe property damage [*40 CFR §122.41(m)(4)(A)*];

    b. There were no feasible alternatives to the bypass, such as the use of auxiliary treatment facilities, retention of untreated wastes, or maintenance during normal periods of equipment downtime. This condition is not satisfied if adequate back-up equipment should have been installed in the exercise of reasonable engineering judgment to prevent a bypass that occurred during normal periods of equipment downtime or preventive maintenance [*40 CFR §122.41(m)(4)(B)*]; and

    c. The Discharger submitted notice to the Regional Water Board as required under Standard Provision – Permit Compliance I.G.5 below [*40 CFR §122.41(m)(4)(C)*].

4. The Regional Water Board may approve an anticipated bypass, after considering its adverse effects, if the Regional Water Board determines that it will meet the three conditions listed in Standard Provisions – Permit Compliance I.G.3 above [*40 CFR §122.41(m)(4)(ii)*].

5. Notice

    a. Anticipated bypass. If the Discharger knows in advance of the need for a bypass, it shall submit a notice, if possible at least 10 days before the date of the bypass [*40 CFR §122.41(m)(3)(i)*].

    b. Unanticipated bypass. The Discharger shall submit notice of an unanticipated bypass as required in Standard Provisions - Reporting V.E below [*40 CFR §122.41(m)(3)(ii)*].

H. Upset

Upset means an exceptional incident in which there is unintentional and temporary noncompliance with technology-based permit effluent limitations because of factors beyond the reasonable control of the permittee. An upset does not include noncompliance to the extent caused by operational error, improperly designed treatment facilities, inadequate treatment facilities, lack of preventive maintenance, or careless or improper operation [*40 CFR §122.41(n)(1)*].

1. Effect of an upset. An upset constitutes an affirmative defense to an action brought for noncompliance with such technology based permit effluent limitations if the requirements of paragraph H.2 of this section are met. No determination made during administrative review of claims that noncompliance was caused by upset, and

before an action for noncompliance, is final administrative action subject to judicial review [*40 CFR §122.41(n)(2)*].

2. Conditions necessary for a demonstration of upset. A Discharger who wishes to establish the affirmative defense of upset shall demonstrate, through properly signed, contemporaneous operating logs or other relevant evidence that [*40 CFR §122.41(n)(3)*]:

   a. An upset occurred and that the Discharger can identify the cause(s) of the upset [*40 CFR §122.41(n)(3)(i)*];

   b. The permitted facility was, at the time, being properly operated [*40 CFR §122.41(n)(3)(i)*];

   c. The Discharger submitted notice of the upset as required in Standard Provisions – Reporting V.E.2.b [*40 CFR §122.41(n)(3)(iii)*]; and

   d. The Discharger complied with any remedial measures required under Standard Provisions – Permit Compliance I.C above [*40 CFR §122.41(n)(3)(iv)*].

3. Burden of proof. In any enforcement proceeding, the Discharger seeking to establish the occurrence of an upset has the burden of proof [*40 CFR §122.41(n)(4)*].

II. STANDARD PROVISIONS – PERMIT ACTION

A. General

This Order may be modified, revoked and reissued, or terminated for cause. The filing of a request by the Discharger for modification, revocation and reissuance, or termination, or a notification of planned changes or anticipated noncompliance does not stay any Order condition [*40 CFR §122.41(f)*].

B. Duty to Reapply

If the Discharger wishes to continue an activity regulated by this Order after the expiration date of this Order, the Discharger must apply for and obtain a new permit [*40 CFR §122.41(b)*].

C. Transfers

This Order is not transferable to any person except after notice to the Regional Water Board. The Regional Water Board may require modification or revocation and reissuance of the Order to change the name of the Discharger and incorporate such other requirements as may be necessary under the CWA and the CWC [*40 CFR §122.41(l)(3)*] [*40 CFR §122.61*].

III. STANDARD PROVISIONS – MONITORING

A. Samples and measurements taken for the purpose of monitoring shall be representative of the monitored activity [*40 CFR §122.41(j)(1)*].

B. Monitoring results must be conducted according to test procedures under 40 CFR Part 136 or, in the case of sludge use or disposal, approved under 40 CFR Part 136 unless otherwise specified in 40 CFR Part 503 unless other test procedures have been specified in this Order [*40 CFR §122.41(j)(4)*] [*40 CFR §122.44(i)(1)(iv)*].

IV. STANDARD PROVISIONS - RECORDS

A. Except for records of monitoring information required by this Order related to the Discharger's sewage sludge use and disposal activities, which shall be retained for a period of at least five years (or longer as required by 40 CFR Part 503), the Discharger shall retain records of all monitoring information, including all calibration and maintenance records and all original strip chart recordings for continuous monitoring instrumentation, copies of all reports required by this Order, and records of all data used to complete the application for this Order, for a period of at least three (3) years from the date of the sample, measurement, report or application. This period may be extended by request of the Regional Water Board Executive Officer at any time [*40 CFR §122.41(j)(2)*].

B. Records of monitoring information shall include:

1. The date, exact place, and time of sampling or measurements [*40 CFR §122.41(j)(3)(i)*];

2. The individual(s) who performed the sampling or measurements [*40 CFR §122.41(j)(3)(ii)*];

3. The date(s) analyses were performed [*40 CFR §122.41(j)(3)(iii)*];

4. The individual(s) who performed the analyses [*40 CFR §122.41(j)(3)(iv)*];

5. The analytical techniques or methods used [*40 CFR §122.41(j)(3)(v)*]; and

6. The results of such analyses [*40 CFR §122.41(j)(3)(vi)*].

C. Claims of confidentiality for the following information will be denied [*40 CFR §122.7(b)*]:

1. The name and address of any permit applicant or Discharger [*40 CFR §122.7(b)(1)*]; and

2. Permit applications and attachments, permits and effluent data [*40 CFR §122.7(b)(2)*].

V. STANDARD PROVISIONS – REPORTING

A. Duty to Provide Information

The Discharger shall furnish to the Regional Water Board, State Water Board, or USEPA within a reasonable time, any information which the Regional Water Board, State Water Board, or USEPA may request to determine whether cause exists for modifying, revoking and reissuing, or terminating this Order or to determine compliance with this Order. Upon request, the Discharger shall also furnish to the Regional Water Board, State Water Board, or USEPA copies of records required to be kept by this Order [*40 CFR §122.41(h)*] [*CWC 13267*].

B. Signatory and Certification Requirements

1. All applications, reports, or information submitted to the Regional Water Board, State Water Board, and/or USEPA shall be signed and certified in accordance with paragraph (2.) and (3.) of this provision [*40 CFR §122.41(k)*].

2. All permit applications shall be signed as follows:

   a. For a corporation: By a responsible corporate officer. For the purpose of this section, a responsible corporate officer means: (i) A president, secretary, treasurer, or vice-president of the corporation in charge of a principal business function, or any other person who performs similar policy- or decision-making functions for the corporation, or (ii) the manager of one or more manufacturing, production, or operating facilities, provided, the manager is authorized to make management decisions which govern the operation of the regulated facility including having the explicit or implicit duty of making major capital investment recommendations, and initiating and directing other comprehensive measures to assure long term environmental compliance with environmental laws and regulations; the manager can ensure that the necessary systems are established or actions taken to gather complete and accurate information for permit application requirements; and where authority to sign documents has been assigned or delegated to the manager in accordance with corporate procedures [*40 CFR §122.22(a)(1)*];

   b. For a partnership or sole proprietorship: by a general partner or the proprietor, respectively [*40 CFR §122.22(a)(2)*]; or

   c. For a municipality, State, federal, or other public agency: by either a principal executive officer or ranking elected official. For purposes of this provision, a principal executive officer of a federal agency includes: (i) the chief executive officer of the agency, or (ii) a senior executive officer having responsibility for the

overall operations of a principal geographic unit of the agency (e.g., Regional Administrators of USEPA) [*40 CFR §122.22(a)(3)*].

3. All reports required by this Order and other information requested by the Regional Water Board, State Water Board, or USEPA shall be signed by a person described in paragraph (b) of this provision, or by a duly authorized representative of that person. A person is a duly authorized representative only if:

   a. The authorization is made in writing by a person described in paragraph (2.) of this provision [*40 CFR §122.22(b)(1)*];

   b. The authorization specified either an individual or a position having responsibility for the overall operation of the regulated facility or activity such as the position of plant manager, operator of a well or a well field, superintendent, position of equivalent responsibility, or an individual or position having overall responsibility for environmental matters for the company (a duly authorized representative may thus be either a named individual or any individual occupying a named position) [*40 CFR §122.22(b)(2)*]; and

   c. The written authorization is submitted to the Regional Water Board, State Water Board, or USEPA [*40 CFR §122.22(b)(3)*].

4. If an authorization under paragraph (3.) of this provision is no longer accurate because a different individual or position has responsibility for the overall operation of the facility, a new authorization satisfying the requirements of paragraph (3.) of this provision must be submitted to the Regional Water Board, State Water Board or USEPA prior to or together with any reports, information, or applications, to be signed by an authorized representative [40 CFR §122.22(c)].

5. Any person signing a document under paragraph (2.) or (3.) of this provision shall make the following certification:

   "I certify under penalty of law that this document and all attachments were prepared under my direction or supervision in accordance with a system designed to assure that qualified personnel properly gather and evaluate the information submitted. Based on my inquiry of the person or persons who manage the system or those persons directly responsible for gathering the information, the information submitted is, to the best of my knowledge and belief, true, accurate, and complete. I am aware that there are significant penalties for submitting false information, including the possibility of fine and imprisonment for knowing violations" [*40 CFR §122.22(d)*].

C. Monitoring Reports

1. Monitoring results shall be reported at the intervals specified in the Monitoring and Reporting Program in this Order [*40 CFR §122.41(l)(4)*].

2. Monitoring results must be reported on a Discharge Monitoring Report (DMR) form or forms provided or specified by the Regional Water Board or State Water Board for reporting results of monitoring of sludge use or disposal practices [*40 CFR §122.41(l)(4)(i)*].

3. If the Discharger monitors any pollutant more frequently than required by this Order using test procedures approved under 40 CFR Part 136 or, in the case of sludge use or disposal, approved under 40 CFR Part 136 unless otherwise specified in 40 CFR Part 503, or as specified in this Order, the results of this monitoring shall be included in the calculation and reporting of the data submitted in the DMR or sludge reporting form specified by the Regional Water Board [*40 CFR §122.41(l)(4)(ii)*].

4. Calculations for all limitations, which require averaging of measurements, shall utilize an arithmetic mean unless otherwise specified in this Order [*40 CFR §122.41(l)(4)(iii)*].

D. Compliance Schedules

Reports of compliance or noncompliance with, or any progress reports on, interim and final requirements contained in any compliance schedule of this Order, shall be submitted no later than 14 days following each schedule date [*40 CFR §122.41(l)(5)*].

E. Twenty-Four Hour Reporting

1. The Discharger shall report any noncompliance that may endanger health or the environment. Any information shall be provided orally within 24 hours from the time the Discharger becomes aware of the circumstances. A written submission shall also be provided within five (5) days of the time the Discharger becomes aware of the circumstances. The written submission shall contain a description of the noncompliance and its cause; the period of noncompliance, including exact dates and times, and if the noncompliance has not been corrected, the anticipated time it is expected to continue; and steps taken or planned to reduce, eliminate, and prevent reoccurrence of the noncompliance [*40 CFR §122.41(l)(6)(i)*].

2. The following shall be included as information that must be reported within 24 hours under this paragraph [*40 CFR §122.41(l)(6)(ii)*]:

   a. Any unanticipated bypass that exceeds any effluent limitation in this Order [*40 CFR §122.41(l)(6)(ii)(A)*].

   b. Any upset that exceeds any effluent limitation in this Order [*40 CFR §122.41(l)(6)(ii)(B)*].

   c. Violation of a maximum daily discharge limitation for any of the pollutants listed in this Order to be reported within 24 hours [*40 CFR §122.41(l)(6)(ii)(C)*].

3. The Regional Water Board may waive the above-required written report under this provision on a case-by-case basis if an oral report has been received within 24 hours [*40 CFR §122.41(l)(6)(iii)*].

F. Planned Changes

The Discharger shall give notice to the Regional Water Board as soon as possible of any planned physical alterations or additions to the permitted facility. Notice is required under this provision only when [*40 CFR §122.41(l)(1)*]:

1. The alteration or addition to a permitted facility may meet one of the criteria for determining whether a facility is a new source in 40 CFR §122.29(b) [*40 CFR §122.41(l)(1)(i)*]; or

2. The alteration or addition could significantly change the nature or increase the quantity of pollutants discharged. This notification applies to pollutants which are subject neither to effluent limitations in this Order nor to notification requirements under 40 CFR Part 122.42(a)(1) (see Additional Provisions—Notification Levels VII.A.1) [*40 CFR §122.41(l)(1)(ii)*].

3. The alteration or addition results in a significant change in the Discharger's sludge use or disposal practices, and such alteration, addition, or change may justify the application of permit conditions that are different from or absent in the existing permit, including notification of additional use or disposal sites not reported during the permit application process or not reported pursuant to an approved land application plan [*40 CFR §122.41(l)(1)(iii)*].

G. Anticipated Noncompliance

The Discharger shall give advance notice to the Regional Water Board or State Water Board of any planned changes in the permitted facility or activity that may result in noncompliance with General Order requirements [*40 CFR §122.41(l)(2)].*

H. Other Noncompliance

The Discharger shall report all instances of noncompliance not reported under Standard Provisions – Reporting E.3, E.4, and E.5 at the time monitoring reports are submitted. The reports shall contain the information listed in Standard Provision – Reporting V.E [*40 CFR §122.41(l)(7)*].

I. Other Information

When the Discharger becomes aware that it failed to submit any relevant facts in a permit application, or submitted incorrect information in a permit application or in any report to the Regional Water Board, State Water Board, or USEPA, the Discharger shall promptly submit such facts or information [*40 CFR §122.41(l)(8)*].

VI. Standard Provisions – Enforcement

A. The CWA provides that any person who violates section 301, 302, 306, 307, 308, 318 or 405 of the Act, or any permit condition or limitation implementing any such sections in a permit issued under section 402, or any requirement imposed in a pretreatment program approved under sections 402(a)(3) or 402(b)(8) of the Act, is subject to a civil penalty not to exceed $25,000 per day for each violation. The CWA provides that any person who negligently violates sections 301, 302, 306, 307, 308, 318, or 405 of the Act, or any condition or limitation implementing any of such sections in a permit issued under section 402 of the Act, or any requirement imposed in a pretreatment program approved under section 402(a)(3) or 402(b)(8) of the Act, is subject to criminal penalties of $2,500 to $25,000 per day of violation, or imprisonment of not more than one (1) year, or both. In the case of a second or subsequent conviction for a negligent violation, a person shall be subject to criminal penalties of not more than $50,000 per day of violation, or by imprisonment of not more than two (2) years, or both. Any person who knowingly violates such sections, or such conditions or limitations is subject to criminal penalties of $5,000 to $50,000 per day of violation, or imprisonment for not more than three (3) years, or both. In the case of a second or subsequent conviction for a knowing violation, a person shall be subject to criminal penalties of not more than $100,000 per day of violation, or imprisonment of not more than six (6) years, or both. Any person who knowingly violates section 301, 302, 303, 306, 307, 308, 318 or 405 of the Act, or any permit condition or limitation implementing any of such sections in a permit issued under section 402 of the Act, and who knows at that time that he thereby places another person in imminent danger of death or serious bodily injury, shall, upon conviction, be subject to a fine of not more than $250,000 or imprisonment of not more than 15 years, or both. In the case of a second or subsequent conviction for a knowing endangerment violation, a person shall be subject to a fine of not more than $500,000 or by imprisonment of not more than 30 years, or both. An organization, as defined in section 309(c)(3)(B)(iii) of the Clean Water Act, shall, upon conviction of violating the imminent danger provision, be subject to a fine of not more than $1,000,000 and can be fined up to $2,000,000 for second or subsequent convictions [*40 CFR §122.41(a)(2)*] [*CWC 13385 and 13387*].

B. Any person may be assessed an administrative penalty by the Regional Water Board for violating section 301, 302, 306, 307, 308, 318 or 405 of this Act, or any permit condition or limitation implementing any of such sections in a permit issued under section 402 of this Act. Administrative penalties for Class I violations are not to exceed $10,000 per violation, with the maximum amount of any Class I penalty assessed not to exceed $25,000. Penalties for Class II violations are not to exceed $10,000 per day for each day during which the violation continues, with the maximum amount of any Class II penalty not to exceed $125,000 [*40 CFR §122.41(a)(3)*].

C. The CWA provides that any person who falsifies, tampers with, or knowingly renders inaccurate any monitoring device or method required to be maintained under this permit shall, upon conviction, be punished by a fine of not more than $10,000, or by imprisonment for not more than 2 years, or both. If a conviction of a person is for a violation committed after a first conviction of such person under this paragraph, punishment is a fine of not more than $20,000 per day of violation, or by imprisonment of not more than 4 years, or both [*40 CFR §122.41(j)(5)*].

D. The CWA provides that any person who knowingly makes any false statement, representation, or certification in any record or other document submitted or required to be maintained under this Order, including monitoring reports or reports of compliance or noncompliance shall, upon conviction, be punished by a fine of not more than $10,000 per violation, or by imprisonment for not more than six months per violation, or by both [*40 CFR §122.41(k)(2)*].

VII. Additional Provisions – Notification Levels

A. Non-Municipal Facilities

Existing manufacturing, commercial, mining, and silvicultural Dischargers shall notify the Regional Water Board as soon as they know or have reason to believe [*40 CFR §122.42(a)*]:

1. That any activity has occurred or will occur that would result in the discharge, on a routine or frequent basis, of any toxic pollutant that is not limited in this Order, if that discharge will exceed the highest of the following "notification levels" [*40 CFR §122.42(a)(1)*]:

    a. 100 micrograms per liter (µg/L) [*40 CFR §122.42(a)(1)(i)*];

    b. 200 µg/L for acrolein and acrylonitrile; 500 µg/L for 2,4-dinitrophenol and 2-methyl-4,6-dinitrophenol; and 1 milligram per liter (mg/L) for antimony [*40 CFR §122.42(a)(1)(ii)*];

    c. Five (5) times the maximum concentration value reported for that pollutant in the Report of Waste Discharge [*40 CFR §122.42(a)(1)(iii)*]; or

    d. The level established by the Regional Water Board in accordance with 40 CFR §122.44(f) [*40 CFR §122.42(a)(1)(iv)*].

2. That any activity has occurred or will occur that would result in the discharge, on a non-routine or infrequent basis, of any toxic pollutant that is not limited in this Order, if that discharge will exceed the highest of the following “notification levels" [*40 CFR §122.42(a)(2)*]:

    a. 500 micrograms per liter (µg/L) [*40 CFR §122.42(a)(2)(i)*];

b. 1 milligram per liter (mg/L) for antimony [*40 CFR §122.42(a)(2)(ii)*];

c. Ten (10) times the maximum concentration value reported for that pollutant in the Report of Waste Discharge [*40 CFR §122.42(a)(2)(iii)*]; or

d. The level established by the Regional Water Board in accordance with 40 CFR §122.44(f) [*40 CFR §122.42(a)(2)(iv)*].

B. Publicly-Owned Treatment Works (POTWs)

All POTWs shall provide adequate notice to the Regional Water Board of the following [*40 CFR §122.42(b)*]:

1. Any new introduction of pollutants into the POTW from an indirect Discharger that would be subject to Sections 301 or 306 of the CWA if it were directly discharging those pollutants [*40 CFR §122.42(b)(1)*]; and

2. Any substantial change in the volume or character of pollutants being introduced into that POTW by a source introducing pollutants into the POTW at the time of adoption of the Order [*40 CFR §122.42(b)(2)*].

Adequate notice shall include information on the quality and quantity of effluent introduced into the POTW as well as any anticipated impact of the change on the quantity or quality of effluent to be discharged from the POTW [*40 CFR §122.42(b)(3)*].

ATTACHMENT E – MONITORING AND REPORTING PROGRAM

Table of Contents

I. General Monitoring Provisions E-3
II. Monitoring Locations E-4
III. Influent Monitoring Requirements E-6
A. Monitoring Locations M-001A, M-001B, M-001C, and M-001D E-6
IV. Effluent Monitoring Requirements E-6
A. Monitoring Locations M-001A, M-001B, M-001C, and M-001D E-6
B. Monitoring Location M-001 ..... E-7
C. Monitoring Location M-001E and M-001F E-10
D. Monitoring Location M-001G E-11
V. Whole Effluent Toxicity Requirements E-11
VI. Land Discharge Monitoring Requirements E-13
VII. Reclamation Monitoring Requirements E-13
VIII. Receiving Water Monitoring Requirements E-13
A. Surf Zone Water Quality Monitoring E-13
B. Near Shore Water Quality Monitoring E-14
C. Off Shore Water Quality Monitoring E-15
D. Benthic Monitoring E-16
E. Additional Biological Monitoring E-17
F. Kelp Bed Monitoring E-18
G. Intensive Monitoring E-18
IX. Other Monitoring Requirements E-19
A. Solids Monitoring E-19
B. Special Studies E-19
X. Reporting Requirements E-19
A. General Monitoring and Reporting Requirements E-19
B. Self Monitoring Reports E-20
C. Discharge Monitoring Reports (DMRs) E-21

List of Tables

Table 1. Monitoring Station Locations E-4
Table 2. Influent Monitoring E-6
Table 3. Municipal Wastewater Treatment Plant Effluent Monitoring E-7
Table 4. Combined Effluent from the Ocean Outfall E-7
Table 5. Brine Discharge Effluent Monitoring E-10
Table 6. Treated Nuisance Discharge Effluent Monitoring E-11
Table 7. Whole Effluent Toxicity Testing E-11
Table 8. Approved Tests For Chronic Toxicity E-12
Table 9. Near Shore Water Quality Requirements E-14
Table 10. Off Shore Water Quality Requirements E-15
Table 11. Sediment Monitoring Requirements E-16
Table 12. Infauna Monitoring Requirements E-17
Table 13. Demersal Fish and Macroinvertebrates Monitoring Requirements E-17
Table 14. Reporting Schedule E-21

ATTACHMENT E – MONITORING AND REPORTING PROGRAM (MRP)

The Code of Federal Regulations (CFR) at 40 CFR 122.48 requires that all NPDES permits specify monitoring and reporting requirements. CWC sections 13267 and 13383 also authorize the Regional Water Board to require technical and monitoring reports. This MRP establishes monitoring and reporting requirements that implement the federal and California regulations.

I. GENERAL MONITORING PROVISIONS

A. Samples and measurements taken as required herein shall be representative of the volume and nature of the monitored discharge. All samples shall be taken at the monitoring points specified below and, unless otherwise specified, before the monitored flow joins or is diluted by any other waste stream, body of water, or substance. Monitoring points shall not be changed without notification to and the approval of the Regional Water Board. Samples shall be collected at times representative of "worst case" conditions with respect to compliance with the requirements of Order No. R9-2006-0054.

B. Appropriate flow measurement devices and methods consistent with accepted scientific practices shall be selected and used to ensure the accuracy and reliability of measurements of the volume of monitored discharges. The devices shall be installed, calibrated and maintained to ensure that the accuracy of the measurements are consistent with the accepted capability of that type of device. Devices selected shall be capable of measuring flows with a maximum deviation of less than ±10 percent from true discharge rates throughout the range of expected discharge volumes.

C. Monitoring must be conducted according to United States Environmental Protection Agency (USEPA) test procedures approved at 40 CFR Part 136, *Guidelines Establishing Test Procedures for the Analysis of Pollutants Under the Clean Water Act* as amended, or unless other test procedures are specified in Order No. R9-2006-0054 and/or in this MRP and/or by the Regional Water Board.

D. All analyses shall be performed in a laboratory certified to perform such analyses by the California Department of Health Services or a laboratory approved by the Regional Water Board.

E. Records of monitoring information shall include information required under Standard Provision IV.

F. All monitoring instruments and devices used by the Discharger to fulfill the prescribed monitoring program shall be properly maintained and calibrated as necessary to ensure their continued accuracy. All flow measurement devices shall be calibrated at least once per year, or more frequently, to ensure continued accuracy of the devices.

G. The Discharger shall have, and implement, an acceptable written quality assurance (QA) plan for laboratory analyses. Duplicate chemical analyses must be conducted on a minimum of ten percent of the samples or at least one sample per month, whichever is greater. A similar frequency shall be maintained for analyzing spiked samples. When requested by USEPA or the Regional Water Board, the Discharger will participate in the NPDES discharge monitoring report QA performance study. The Discharger should have a success rate equal or greater than 80 percent.

H. Analysis for toxic pollutants, including acute and chronic toxicity, with effluent limitations based on water quality objectives of the 2005 California Ocean Plan shall be conducted in accordance with procedures described in the 2005 California Ocean Plan and restated in this MRP.

I. This permit may be modified in accordance with the requirements set forth at 40 CFR Parts 122 and 124, to include appropriate conditions or limits to address demonstrated effluent toxicity based on newly available information, or to implement any USEPA approved, new, state water quality standards applicable to effluent toxicity.

II. MONITORING LOCATIONS

The Discharger shall establish the following monitoring locations to demonstrate compliance with the effluent limitations, discharge specifications, and other requirements in this Order:

Table 1. Monitoring Station Locations

Discharge Point Name	Monitoring Location Name	Monitoring Location Description
	M-INFA	At the South Orange County Wastewater Authority (SOCWA) Jay B. Latham Regional Treatment Plant (RTP) and at a location where all influent flows to the treatment plant are accounted for in monitoring events; upstream of any in-plant return flows; and where representative samples of influent can be collected.
	M-INFB	At the Santa Margarita Water District (SMWD) Chiquita Water Reclamation Plant (WRP) and at a location where all influent flows to the treatment plant are accounted for in monitoring events; upstream of any in-plant return flows; and where representative samples of influent can be collected.
	M-INFC	At the Moulton Niguel Water District (MNWD) 3A Reclamation Plant (RP) and at a location where all influent flows to the treatment plant are accounted for in monitoring events; upstream of any in-plant return flows; and where representative samples of influent can be collected.
	M-INFD	At the City of San Clemente RP and at a location where all influent flows to the treatment plant are accounted for in monitoring events; upstream of any in-plant return flows; and where representative samples of influent can be collected.

Discharge Point Name	Monitoring Location Name	Monitoring Location Description
Outfall 001	M-001	At a location where representative samples of commingled effluent from all contributors to the San Juan Creek Ocean Outfall (Ocean Ouftall). The location shall be specifically be performed in the sampling vault in the Dohenny State Beach Park through a sampling port in the outfall pipe.
	M-001A	Final effluent from the SOCWA Jay B. Latham RTP and downstream of any in-plant return flows and disinfection units where representative samples of effluent treated solely at the treatment plant can be collected.
	M-001B	Final effluent from the SMWD Chiquita WRP and downstream of any in-plant return flows and disinfection units where representative samples of effluent treated solely at the treatment plant can be collected.
	M-001C	Final effluent from the MNWD 3A RP and downstream of any in-plant return flows and disinfection units where representative samples of effluent treated solely at the treatment plant can be collected.
	M-001D	Final effluent from the City of San Clemente RP and downstream of any in-plant return flows and disinfection units where representative samples of effluent treated solely at the treatment plant can be collected.
	M-001E	Brine discharge from the City of San Juan Capistrano Reverse Osmosis (RO) Water Treatment Plant prior to mixing with any other flows directed to the Ocean Outfall.
	M-001F	Brine discharge from the South Coast Water District Groundwater Recovery Facility (GRF) prior to mixing with any other flows directed to the Ocean Outfall.
	M-001G	Treated effluent from the Segunda Deshecha (M02) Flood Control Channel urban runoff treatment process prior to mixing with flows in the San Clemente Land Outfall.
- Receiving Water Monitoring Stations -		
- Surf Zone Monitoring Stations -		
	C1	San Juan Creek
	C2	San Juan Creek above SERRA plant (enter through park)
	S0	Surf at outfall
	S1	Surf 1,000 feet southeasterly of outfall
	S2	Surf, North Doheny Beach, midpoint between jetty and San Juan Creek
	S3	Surf, 2,000 feet southeasterly of outfall
	S4	Surf at entrance to Dana Point Harbor
	S5	Surf 3,000 feet southeasterly of outfall
	S6	Surf 50 feet west of westerly end of the Dana Point Harbor complex
	S7	Surf 4,000 feet southeasterly of outfall
	S9	Surf 5,000 feet southeasterly of outfall
	S11	Surf 7,500 feet southeasterly of outfall
	S13	Surf 10,000 feet southeasterly of outfall
	S15	Surf 14,000 feet southeasterly of outfall
	S17	Surf 20,000 feet southeasterly of outfall
	S19	Surf 25,000 feet southeasterly of outfall
	S21	Surf 31,000 feet southeasterly of outfall
	S23	Surf 35,000 feet southeasterly of outfall
- Near Shore Monitoring Stations -		

Discharge Point Name	Monitoring Location Name	Monitoring Location Description
	N1	At the 30-foot depth contour, 6,000 feet down-coast from the outfall
	N2	At the 30-foot depth contour, 4,000 feet down-coast from the outfall
	N3	At the 30-foot depth contour, 2,000 feet down-coast from the outfall
	N4	At the 30-foot depth contour, 2,000 feet up-coast from the outfall
	N5	At the 30-foot depth contour, 4,000 feet up-coast from the outfall
	N6	At the 30-foot depth contour, 6,000 feet up-coast from the outfall
- Offshore Monitoring Stations -		
	A1 – A4	At the corners of a 2,000 ft x 2,000 ft square having one side parallel to shore and the intersection of its diagonals located at the center of the outfall diffuser sections. Station A1 shall be located at the east corner and Stations A2 through A4 at successive corners in a clockwise direction.
	A5	At the intersection of the diagonals of the above square.
	B1	One mile down-coast from the outfall, and over the same depth contour as Station A5
	B2	One mile up-coast from the outfall, and over the same depth contour as Station A5
- Biological Transects -		
	T0	At the 20, 40, 60, and 80 foot depth contours along the transect located 50 ft down-coast of and parallel to the outfall
	T1	At the 20, 40, 60, and 80 foot depth contours along the transect located 1 mile down-coast of and parallel to the outfall
	T2	At the 20, 40, 60, and 80 foot depth contours along the transect located 1.5 miles up-coast of and parallel to the outfall

CORE MONITORING

III. INFLUENT MONITORING REQUIREMENTS

A. Monitoring Locations M-INFA, M-INFB, M-INFC, and M-INFD

1. The Discharger shall monitor at monitoring locations influent at each point of inflow to all treatment plants, which shall be located upstream of any in-plant return flows, and where representative samples of the influent can be obtained. Influent samples shall be collected on the same day as, and shortly before the collection of effluent samples. Sampling shall be monitored as follows:

Table 2. Influent Monitoring

Parameter	Units	Sample Type	Minimum Sampling Frequency
Flow	MGD	Recorder / Totalize	Continuous
Carbonaceous Biochemical Oxygen Demand ($CBOD_5$) (5-day @ 20º C)	mg/L	24-Hour Composite	Weekly
Biochemical Oxygen Demand (BOD (5-(5-day @ 20º C)	mg/L	24-Hour Composite	Monthly
Total Suspended Solids (TSS)	mg/L	24 Hour Composite	Weekly

2. The Discharger shall calculate and report the $CBOD_5$, TSS and BOD_5 mass influent for the days when the influent is sampled for these constituents. Calculation of influent mass shall be in accordance with Provision VII.G of Order No. R9-2006-0054.

IV. EFFLUENT MONITORING REQUIREMENTS

A. Monitoring Locations M-001A, M-001B, M-001C, and M-001D

1. The Discharger shall monitor secondary effluent after all in-plant return flows, and disinfection units, where representative samples of the effluent discharged through the ocean outfall can be obtained. During periods where no effluent from a particular treatment plant is discharged to the Pacific Ocean through the Ocean Outfall, no effluent monitoring, except for flowrate monitoring, is required at that treatment plant. The following shall constitute the effluent monitoring program:

Table 3. Municipal Wastewater Treatment Plant Effluent Monitoring

Parameter	Units	Sample Type [1]	Minimum Sampling Frequency
Flow [2]	MGD	Recorder / Totalizer	Continuous
$CBOD_5$	mg/L	24 Hr Composite	Daily
BOD_5	mg/L	24 Hr Composite	Monthly
TSS	mg/L	24 Hr Composite	Daily
pH	mg/L	Grab	Daily
Oil and Grease	mg/L	Grab	Monthly
Settleable Solids	ml/L	Grab	Daily
Turbidity	NTU	24 Hr Composite	Weekly [3]
$CBOD_5$, Percent Removal	%	Calculate	Daily
TSS, Percent Removal	%	Calculate	Daily

[1] For samples which are to be physically composited prior to analyses, or for the results of analyses that are to be arithmetically composited, the basis for compositing shall be the rate of discharge to the ocean, not the rate of inflow to the plant.

[2] Report the total daily effluent flow and the monthly average effluent flow.

[3] Five days per week except seven days per week for at least one week during July or August of each year.

2. The Discharger shall calculate and report the $CBOD_5$, TSS and BOD_5 effluent mass emission rate for the days when the effluent is sampled for these constituents.

Calculation of effluent mass emission rate shall be in accordance with Provision VII.G of Order No. R9-2006-0054.

3. The Discharger shall calculate the daily percent average removal and report the monthly average percent removal for $CBOD_5$, BOD_5 and TSS in accordance with Provision VII.H of Order No. R9-2006-0054.

B. Monitoring Location M-001

The Discharger shall monitor the combined effluent, where representative samples of the effluent discharged through the Outfall 001 can be obtained (the location shall be specifically be performed in the sampling vault in the Dohenny State Beach Park through a sampling port in the outfall pipe). The following shall constitute the effluent monitoring program:

Table 4. Combined Effluent from the San Juan Creek Ocean Outfall

Parameter	Units	Sample Type [1]	Minimum Sampling Frequency
Flow [2]	MGD	Recorder / Totalizer	Continuous
Dissolved Oxygen	mg/L	Grab	Weekly
Temperature	º F	Grab	Weekly
Total Residual Chlorine [5]	µg/L	Grab	Daily
Arsenic	µg/L	24 Hr Composite	Quarterly [3, 4]
Cadmium	µg/L	24 Hr Composite	Quarterly [3, 4]
Chromium (VI)	µg/L	24 Hr Composite	Quarterly [3, 4, 6]
Copper	µg/L	24 Hr Composite	Quarterly [3, 4]
Lead	µg/L	24 Hr Composite	Quarterly [3, 4]
Mercury	µg/L	24 Hr Composite	Quarterly [3, 4]
Nickel	µg/L	24 Hr Composite	Quarterly [3, 4]
Selenium	µg/L	24 Hr Composite	Quarterly [3, 4]
Silver	µg/L	24 Hr Composite	Quarterly [3, 4]
Zinc	µg/L	24 Hr Composite	Quarterly [3, 4]
Cyanide	µg/L	24 Hr Composite	Quarterly [3, 4]
Ammonia	mg/L	24 Hr Composite	Monthly [3]
Non-Chlorinated Phenolic Compounds	µg/L	24 Hr Composite	Quarterly [3, 4]
Chlorinated Phenolics	µg/L	24 Hr Composite	Quarterly [3, 4]
Endosulfan	µg/L	24 Hr Composite	Quarterly [3, 4]
Endrin	µg/L	24 Hr Composite	Quarterly [3, 4]
HCH	µg/L	24 Hr Composite	Quarterly [3, 4]
Radioactivity	pCi/L	Grab	Quarterly [3, 7]
Acrolein	µg/L	Grab	Semiannually [3]
Antimony	µg/L	24 Hr Composite	Semiannually [3]
Bis (2-Chloroethoxy) Methane	µg/L	Grab	Semiannually [3]
Bis (2-Chloroisopropyl) Ether	µg/L	Grab	Semiannually [3]
Chlorobenzene	µg/L	Grab	Semiannually [3]

Parameter	Units	Sample Type [1]	Minimum Sampling Frequency
Chromium (Trivalent)	µg/L	24 Hr Composite	Semiannually [3]
Di-N-Butyl Phthalate	µg/L	Grab	Semiannually [3]
Dichlorobenzenes	µg/L	Grab	Semiannually [3]
Diethyl Phthalate	µg/L	Grab	Semiannually [3]
Dimethyl Phthalate	µg/L	Grab	Semiannually [3]
4,6-Dinitro-2-Methylphenol	µg/L	Grab	Semiannually [3]
2,4-Dinitrophenol	µg/L	Grab	Semiannually [3]
Ethylbenzene	µg/L	Grab	Semiannually [3]
Fluoranthene	µg/L	Grab	Semiannually [3]
Hexachlorocyclopentadiene	µg/L	Grab	Semiannually [3]
Nitrobenzene	µg/L	Grab	Semiannually [3]
Thallium	µg/L	24 Hr Composite	Semiannually [3]
Toluene	µg/L	Grab	Semiannually [3]
1,1,1-Trichloroethane	µg/L	Grab	Semiannually [3]
Tributyltin	µg/L	24 Hr Composite	Semiannually [3]
Acrylonitrile	µg/L	Grab	Semiannually [3]
Aldrin	µg/L	Grab	Semiannually [3]
Benzene	µg/L	Grab	Semiannually [3]
Benzidine	µg/L	Grab	Semiannually [3]
Beryllium	µg/L	24 Hr Composite	Semiannually [3]
Bis (2-Chloroethyl) Ether	µg/L	Grab	Semiannually [3]
Bis (2-Ethylhexyl) Phthalate	µg/L	Grab	Semiannually [3]
Carbon Tetrachloride	µg/L	Grab	Semiannually [3]
Chlordane	µg/L	Grab	Semiannually [3]
Chlorodibromomethane	µg/L	Grab	Semiannually [3]
Chloroform	µg/L	Grab	Semiannually [3]
DDT	µg/L	Grab	Semiannually [3]
1,4-Dichlorobenzene	µg/L	Grab	Semiannually [3]
3,3'-Dichlorobenzidine	µg/L	Grab	Semiannually [3]
1,2-Dichloroethane	µg/L	Grab	Semiannually [3]
1,1-Dichloroethylene	µg/L	Grab	Semiannually [3]
Dichlorobromomethane	µg/L	Grab	Semiannually [3]
Dichloromethane	µg/L	Grab	Semiannually [3]
1,3-Dichloropropene	µg/L	Grab	Semiannually [3]
Dieldrin	µg/L	Grab	Semiannually [3]
2,4-Dinitrotoluene	µg/L	Grab	Semiannually [3]
1,2-Diphenylhydrazine	µg/L	Grab	Semiannually [3]
Halomethanes	µg/L	Grab	Semiannually [3]
Heptachlor	µg/L	Grab	Semiannually [3]
Heptachlor Epoxide	µg/L	Grab	Semiannually [3]
Hexachlorobenzene	µg/L	Grab	Semiannually [3]
Hexachlorobutadiene	µg/L	Grab	Semiannually [3]
Hexachloroethane	µg/L	Grab	Semiannually [3]

Parameter	Units	Sample Type [1]	Minimum Sampling Frequency
Isophorone	µg/L	Grab	Semiannually [3]
N-nitrosodimethylamine	µg/L	Grab	Semiannually [3]
N-nitrosodi-N-propylamine	µg/L	Grab	Semiannually [3]
N-nitrosodiphenylamine	µg/L	Grab	Semiannually [3]
PAHs	µg/L	Grab	Semiannually [3]
PCBs	µg/L	Grab	Semiannually [3]
TCDD Equivalents	µg/L	Grab	Semiannually [3]
1,1,2,2-Tetrachloroethane	µg/L	Grab	Semiannually [3]
Tetrachloroethylene	µg/L	Grab	Semiannually [3]
Toxaphene	µg/L	Grab	Semiannually [3]
Trichloroethylene	µg/L	Grab	Semiannually [3]
1,1,2-Trichloroethane	µg/L	Grab	Semiannually [3]
2,4,6-Trichlorophenol	µg/L	Grab	Semiannually [3]
Vinyl Chloride	µg/L	Grab	Semiannually [3]

[1] For samples which are to be physically composited prior to analyses, or for the results of analyses that are to be arithmetically composited, the basis for compositing shall be the rate of discharge to the ocean, not the rate of inflow to the plant.

[2] Report the total daily effluent flow and the monthly average effluent flow.

[3] The minimum frequency of monitoring for this constituent is automatically increased to twice the minimum frequency specified, if any analysis for this constituent yields a result higher than the effluent limit specified in this Order for this constituent. The increased minimum frequency of monitoring shall remain in effect until the results of a minimum of four consecutive analyses for this constituent are below all effluent limits specified in this Order for this constituent.

[4] The minimum frequency of monitoring for this constituent is automatically reduced to annually if the results of 12 consecutive analyses, representing each month of the year, or the results of 24 consecutive analyses, representing each quarter of the year, are below the Ocean Plan 6-month median water quality objective for this constituent, or below the Minimum Level for this constituent in the matrix being analyzed, whichever is higher.

[5] Monitoring of total chlorine residual is not required on days when none of the treatment units that are subject to Order No. R9-2006-0054 use chlorine for disinfection. If only one sample is collected for total chlorine residual analysis, on a particular day, that sample must be collected at the time when the concentration of total chlorine residual in the discharge would be expected to be greatest. The times of chlorine discharges on the days that samples are collected, and the time at which samples are collected, shall be reported.

[6] The Discharger may, at its option, monitor for total chromium. If the measured total chromium concentration exceeds the hexavalent chromium limitation, it will be assumed that the hexavalent chromium limitation was exceeded unless the results of a hexavalent chromium analysis of a replicate sample indicate otherwise. When analyzing for hexavalent chromium, the appropriate sampling and analytical method must be used (i.e., 24-hour composite, cooled to 4º C and analyzed within 24 hours).

[7] Analyses for radioactivity shall be by the following USEPA methods: Method 900.0 for gross alpha and gross beta, Method 903.0 or 903.1 for radium-226, Method 904.0 for radium-228, and Method 905.0 for strontium-90. Monitoring for radium-226 and radium-228 for an effluent sample is not required unless results for gross alpha for the same effluent sample exceed 60 pCi/L.

C. Monitoring Locations M-001E and M-001F

The Discharger shall monitor brine discharges directed to the Ocean Outfall, where representative samples of the discharges prior to mixing with other wastewaters can be obtained. The following shall constitute the effluent monitoring program:

Table 5. Brine Discharge Effluent Monitoring

Parameter	Units	Sample Type	Minimum Sampling Frequency
Flow [1]	MGD	Recorder / Totalizer	Continuous
TSS	mg/L	24 Hr Composite	Weekly
pH	mg/L	Grab	Weekly
Oil and Grease	mg/L	Grab	Weekly
Settleable Solids	ml/L	Grab	Weekly

[1] Report the total daily effluent flow and the monthly average effluent flow.

D. Monitoring Location M-001G

The Discharger shall collect representative samples from the treated effluent from the Segunda Deshecha (M02) Flood Control Channel urban runoff treatment process prior to mixing with flows in the San Clemente Land Outfall. The following shall constitute the effluent monitoring program:

Table 6. Treated Nuisance Discharge Effluent Monitoring

Parameter	Units	Sample Type	Minimum Sampling Frequency
Flow [1]	MGD	Recorder / Totalizer	Continuous
TSS	mg/L	24 Hr Composite	Weekly
pH	mg/L	Grab	Weekly
Oil and Grease	mg/L	Grab	Weekly
Settleable Solids	ml/L	Grab	Weekly

[1] Report the total daily effluent flow and the monthly average effluent flow.

E. Minimum Levels

For each numeric effluent limitation or performance goal for a constituent identified in Table B of the California Ocean Plan (2005), the Discharger shall select one or more Minimum Levels (ML) and their associated analytical methods from Appendix II of the 2005 Ocean Plan. For constituents listed in Appendix II, the Discharger shall submit an appropriate ML (and its associated analytical method) for determining compliance with the effluent limitation (or conformance with the performance goal) for that constituent. All MLs must be approved by the Regional Water Board and/or the State Water Board. The “reported” ML is the ML (and its associated analytical method) chosen by the Discharger for reporting and compliance determination from Appendix II. ML’s chosen by the Discharger must be approved by the Executive Officer.

1 Selection of Minimum Levels from Appendix II

The Discharger must select from all MLs from Appendix II that are below the effluent limitation or performance goal. If the effluent limitation or performance goal is lower than all the MLs in Appendix II, then the Discharger must select the lowest ML.

2. Use of Minimum Levels

a. MLs, as defined in Appendix II of the 2005 Ocean Plan, represent the lowest quantifiable concentration in a sample based on the proper application of method-specific analytical procedures and the absence of matrix interferences. MLs also represent the lowest standard concentration in the calibration curve for a specific analytical technique after the application of appropriate method-specific factors.

Common analytical practices may require different treatment of the sample relative to the calibration standard. Some examples of these practices are given in Chapter III.C.5.a of the Ocean Plan.

b. Other factors may be applied to the ML depending on the specific sample preparation steps employed. For example, the treatment typically applied when there are matrix effects is to dilute the sample or sample aliquot by a factor of ten. In such cases, this additional factor must be applied during the computation of the reporting limit. Application of such factors will alter the reported ML.

c. The Discharger shall instruct its laboratories to establish calibration standards so that the ML (or its equivalent if there is differential treatment of samples relative to calibration standards) is the lowest calibration standard. At no time is the Discharger to use analytical data derived from *extrapolation* beyond the lowest point of the calibration curve. In accordance with the Ocean Plan, the Discharger's laboratory may employ a calibration standard lower than the ML in Appendix II.

V. WHOLE EFFLUENT TOXICITY TESTING REQUIREMENTS

The Discharger shall conduct acute and chronic toxicity testing on effluent samples collected at Effluent Monitoring Station M-001 in accordance with the following schedule and requirements:

Table 7. Whole Effluent Toxicity Testing

Test	Unit	Sample	Minimum Test Frequency
Acute Toxicity	TU_a	24-Hr. Composite	Monthly
Chronic Toxicity	TU_c	24-Hr. Composite	Monthly

A. Acute toxicity testing shall be performed using either a marine fish or invertebrate species in accordance with procedures established by the USEPA guidance manual, *Methods for Measuring the Acute Toxicity of Effluents and Receiving Waters to Freshwater and Marine Organisms*, 5th Edition, October 2002 (EPA-821-R-02-012).

B. Critical life stage toxicity tests shall be performed to measure chronic toxicity (TU_c). Testing shall be performed using methods outlined in *Short-Term Methods for Estimating the Chronic Toxicity of Effluents and Receiving Waters to West Coast Marine and Estuarine Organisms* (Chapman, G.A., D.L. Denton, and J.M. Lazorchak, 1995) or *Procedures Manual for Conducting Toxicity Tests Developed by the Marine Bioassay Project* (SWRCB, 1996).

C. A screening period for chronic toxicity shall be conducted every other year for 3 months, using a minimum of three test species with approved test protocols, from the following list (from the Ocean Plan). Other tests may be used, if they have been approved for such testing by the State Water Board. The test species shall include a fish, an invertebrate, and an aquatic plant. After the screening period, the most sensitive test species shall be used for the monthly testing. Repeat screening periods may be terminated after the first month if the most sensitive species is the same as found previously to be most sensitive. Dilution and control water should be obtained from an unaffected area of the receiving waters. The sensitivity of the test organisms to a reference toxicant shall be determined concurrently with each bioassay test and reported with test results.

D. If the toxicity testing result shows an exceedance of the chronic toxicity limitation identified in Section IV.B.3 of this Order, the Discharger shall:

1. Take all reasonable measures necessary to immediately minimize toxicity; and

2. Increase the frequency of the toxicity test(s) that showed a violation to at least two times per month until the results of at least two consecutive toxicity tests do not show violations.

If the Executive Order determines that toxicity testing shows consistent violation or exceedance of any acute or chronic toxicity limitation or performance goal identified in Section IV.B.3 of this Order, the Discharger shall conduct a Toxicity Reduction Evaluation (TRE) that includes all reasonable steps to identify the source of toxicity. Once the source of toxicity is identified, the Discharger shall take all reasonable steps to reduce the toxicity to meet the toxicity limitations identified in the final effluent limitations for Outfall 001 (Section IV.B.3 of this Order).

Table 8. Approved Tests for Chronic Toxicity

Species	Test	Tier [1]	Reference [2]
giant kelp, *Macrocystis pyrifera*	Percent Germination; Germ Tube Length	1	a, c
red abalone, *Haliotis rufescens*	Abnormal Shell Development	1	a, c

Species	Test	Tier [1]	Reference [2]
oyster, *Crassostrea gigas*; mussels, *Mytilus spp*.	Abnormal Shell Development; Percent Survival	1	a, c
urchin, *Strongylocentrotus purpuratus*; sand dollar, *Dendraster excentricus*	Percent Normal Development	1	a, c
urchin, *Strongylocentrotus purpuratus*; sand dollar, *Dendraster excentricus*	Percent Fertilization	1	a, c
shrimp, *Homesimysis costata*	Percent Survival; Growth	1	a, c
shrimp, *Mysidopsis bahia*	Percent Survival; Fecundity	2	b, d
topsmelt, *Atherinops affinis*	Larval Growth Rate; Percent Survival	1	a, c
Silversides, *Menidia beryllina*	Larval Growth Rate; Percent Survival	2	b, d

[1] First tier methods are preferred for compliance monitoring. If first tier organisms are not available, the Discharger can use a second tier test method following approval by the Regional Water Board.

[2] Protocol References:

a. Chapman, G.A., D.L. Denton, and J.M. Lazorchak. 1995. *Short-term Methods for Estimating the Chronic Toxicity of Effluents and Receiving Waters to West Coast Marine and Estuarine Organisms*. USEPA Report No. EPA/600/R-95/136.

b. Klemm, D.J., G.E. Morrison, T.J. Norberg-King, W.J. Peltier, and M.A. Heber. 1994. *Short-term Methods for Estimating the Chronic Toxicity of Effluents and Receiving Water to Marine and Estuarine Organisms*. USEPA Report No. EPA-600-4-91-003.

c. SWRCB 1996. *Procedures Manual for Conducting Toxicity Tests Developed by the Marine Bioassay Project*. 96-1WQ.

d. Weber, C.I., W.B. Horning, I.I., D.J. Klemm, T.W. Nieheisel, P.A. Lewis, E.L. Robinson, J. Menkedick and F. Kessler 9eds). 1998. *Short-term Methods for Estimating the Chronic Toxicity of Effluents and Receiving Waters to Marine and Estuarine Organisms*. EPA/600/4-87/028. National Information Service, Springfield, VA.

VI. RECEIVING WATER MONITORING REQUIREMENTS

Receiving water and sediment monitoring in the vicinity of the Ocean Outfall shall be conducted as specified below. Station location, sampling, sample preservation and analyses, when not specified, shall be by methods approved by the Executive Officer. The monitoring program may be modified by the Executive Officer at any time.

The receiving water and sediment monitoring program for the Ocean Outfall may be conducted jointly with other dischargers to the Ocean Outfall.

During monitoring events, if possible, sample stations shall be located using a land-based microwave positioning system or a satellite positioning system such as global positioning system (GPS). If an alternate navigation system is proposed, its accuracy should be compared to that of microwave and satellite based systems, and any compromises in accuracy shall be justified.

A. Surf Zone Water Quality Monitoring

All surf zone stations shall be monitored as follows:

1. Grab samples shall be collected and analyzed for total and fecal coliform and enteroccoccus bacteria at a minimum frequency of twice per week from May 1 through October 31, and once a week from November 1 through April 30 of each year.

2. Samples shall be collected in accordance with the Orange County Health Care Agency, Environmental Health.

3. At the same time samples are collected from surf zone stations, the following information shall be recorded: observation of wind direction and speed; weather (cloudy, sunny, or rainy); current direction; tidal conditions; observations of water color, discoloration, oil and grease, turbidity, odor, and materials of sewage origin in the water or on the beach; and water temperature (º F). The Discharger shall also record the status of the mouth of San Juan Creek (open, closed, flow, etc.).

4. If a surf zone water quality monitoring station consistently exceeds a coliform objective or exceeds a geometric mean enterococcus density of 24 organisms per 100 mL for a 30 day period or 12 organisms per 100 mL for a 6 month period, the Discharger shall conduct a survey to determine if discharges from the Ocean Outfall are the source of the contamination. If the survey indicates that elevated coliform and/or enterococcus levels are attributable to discharges from the Ocean Outfall, the Discharger shall take action to control the source.

B. Near Shore Water Quality Monitoring

All near shore monitoring stations shall be monitored as described below.

1. Reduced Monitoring

   If the Executive Officer determines that the effluent at all times complies with Section IV.B Effluent Limitations and Performance Goals of Order No. R9-2006-0054, only reduced near shore water quality monitoring specified below is required.

Table 9a. Near Shore Water Quality Reduced Monitoring Requirements

Determination	Units	Type of Sample	Minimum Frequency
Visual Observations	-	-	Monthly
Total and Fecal Coliform	Number / 100 mL	Grab [1]	Monthly
Enteroccoccus [2]	Number / 100 mL	Grab [1]	Monthly

[1] At the surface

[2] If the Discharger demonstrates to the satisfaction of the Executive Officer, by means of daily analyses, that the concentrations of total and fecal coliform bacteria in the effluent are consistently less than 1,000 per mL, enterococcus monitoring may be suspended. The Discharger shall conduct the monitoring as specified unless the Executive Officer provides written authorization to suspend it. If this monitoring is suspended, the Discharger shall resume it at the request of the Executive Officer.

2. Intensive Monitoring

The intensive near shore water quality monitoring specified below is required during the 12-month period beginning July 1, 2008 through June 30, 2009, and must be submitted by August 1, 2011. This monitoring data will assist Regional Water Board staff in the evaluation of the Report of Waste Discharge. The intensive near shore water quality monitoring specified below is also required if the Executive Officer determines that the effluent does not at all times comply with Section IV.B Effluent Limitations and Performance Goals of Order No. R9-2006-0054.

Table 9b. Near Shore Water Quality Intensive Monitoring Requirements

Determination	Units	Type of Sample	Minimum Frequency
Visual Observations	-	-	Monthly
Total and Fecal Coliform	Number / 100 mL	Grab [1]	Monthly
Enteroccoccus	Number / 100 mL	Grab [1]	Monthly

[1] At the surface and mid-depth.

C. Off Shore Water Quality Monitoring

All near shore monitoring stations shall be monitored as described below.

2. Reduced Monitoring

If the Executive Officer determines that the effluent at all times complies with Section IV.B Effluent Limitations and Performance Goals of Order No. R9-2006-0054, only reduced off shore water quality monitoring specified below is required.

Table 10a. Off Shore Water Quality Reduced Monitoring Requirements

Determination	Units	Type of Sample	Minimum Frequency
Visual Observations	-	-	Monthly
Total and Fecal Coliform	Number / 100 mL	Grab [1]	Monthly
Enteroccoccus [2]	Number / 100 mL	Grab [1]	Monthly

[1] At the surface and mid-depth.

[2] If the Discharger demonstrates to the satisfaction of the Executive Officer, by means of daily analyses, that the concentrations of total and fecal coliform bacteria in the effluent are consistently less than 1,000 per mL, enterococcus monitoring may be suspended. The Discharger shall conduct the monitoring as specified unless the Executive Officer provides written authorization to suspend it. If this monitoring is

suspended, the Discharger shall resume it at the request of the Executive Officer.

3. Intensive Monitoring

The intensive off shore water quality monitoring specified below is required during the 12-month period beginning July 1, 2008 through June 30, 2009, and must be submitted by August 1, 2011. This monitoring data will assist Regional Water Board staff in the evaluation of the Report of Waste Discharge. The intensive off shore water quality monitoring specified below is also required if the Executive Officer determines that the effluent does not at all times comply with Section IV.B Effluent Limitations and Performance Goals of Order No. R9-2006-0054.

Table 10b. Off Shore Water Quality Intensive Monitoring Requirements

Determination	Units	Type of Sample	Minimum Frequency
Visual Observations	-	-	Monthly
Total and Fecal Coliform	Number / 100 mL	Grab [1]	Monthly
Enteroccoccus	Number / 100 mL	Grab [1]	Monthly
Salinity, Temperature and Depth	Practical salinity units, º C, feet	Instrument [2]	Monthly
Dissolved Oxygen	mg/L	Grab [3]	Monthly
Light Transmittance	Percent	Instrument [3]	Monthly
pH	pH units	Grab [4]	Monthly

[1] At the surface and mid-depth.
[2] At 1-meter intervals, surface to bottom.
[3] At the surface, mid-depth, and bottom.
[4] At the surface.

D. Benthic Monitoring

The intensive monitoring specified below is required during the 12-month period beginning July 1, 2008 through June 30, 2009, and must be submitted by August 1, 2011. This monitoring data will assist Regional Water Board staff in the evaluation of the Report of Waste Discharge. The sediment monitoring specified below is also required if the Executive Officer determines that the effluent does not at all times comply with Section IV.B Effluent Limitations and Performance Goals of Order No. R9-2006-0054. Benthic monitoring shall be conducted at all off shore monitoring stations.

1. Sediment Characteristics. Analyses shall be performed on the upper 2 inches of core.

Table 11. Sediment Monitoring Requirements

Determination	Units	Type of Sample	Minimum Frequency
Sulfides	mg/kg	Core	Semiannually

Determination	Units	Type of Sample	Minimum Frequency
Total Chlorinated Hydrocarbons	mg/kg	Core	Semiannually
BOD_5	mg/kg	Core	Semiannually
COD	mg/kg	Core	Semiannually
Particle Size Distribution	mg/kg	Core	Semiannually
Arsenic	mg/kg	Core	Annually
Cadmium	mg/kg	Core	Annually
Total Chromium	mg/kg	Core	Annually
Copper	mg/kg	Core	Annually
Lead	mg/kg	Core	Annually
Mercury	mg/kg	Core	Annually
Nickel	mg/kg	Core	Annually
Silver	mg/kg	Core	Annually
Zinc	mg/kg	Core	Annually
Cyanide	mg/kg	Core	Annually
Phenolic Compounds (non-chlorinated)	mg/kg	Core	Annually
Chlorinated Phenolics	mg/kg	Core	Annually
Aldrin and Dieldrin	mg/kg	Core	Annually
Chlordane and Related Compounds	mg/kg	Core	Annually
DDT and Derivatives	mg/kg	Core	Annually
Endrin	mg/kg	Core	Annually
HCH	mg/kg	Core	Annually
PCBs	mg/kg	Core	Annually
Toxaphene	mg/kg	Core	Annually
Radioactivity	pCi/kg	Core	Annually

2. Infauna. Samples shall be collected with a Paterson, Smith-McIntyre, or orange-peel type dredge, having an open sampling area of not less than 124 square inches and a sediment capacity of not less than 210 cubic inches. The sediment shall be sifted through a 1-millimeter mesh screen and all organisms shall be identified to as low a taxon as possible.

Table 12. Infauna Monitoring Requirements

Determination	Units	Minimum Frequency
Benthic Biota	Identification and Enumeration	3 grabs, Semiannually

E. Additional Biological Monitoring

Demersal Fish and Macroinvertebrates

The monitoring specified below is required during the 12-month period beginning July 1, 2008 through June 30, 2009. The monitoring data will assist Regional Water Board

staff in the evaluation of the Report of Waste Discharge, which is required to be submitted within 180 days prior to the Order's expiration date of August 1, 2011.

Table 13. Demersal Fish and Macroinvertebrates Monitoring Requirements

Determination	Units	Minimum Frequency
Biological Transects	Identification and enumeration	Annually

In rocky or cobble areas, a 30-meter band transect, one meter wide, shall be established on the ocean bottom. Operations at each underwater station shall include: (1) recording of water temperature (may be measured from a boat) and estimated visibility and pelagic macrobiota at each 10-foot depth increment throughout the water column and at the bottom; (2) recording of general bottom description; (3) enumeration by estimate of the larger plants and animals in the band transect area; (4) development of a representative photographic record of the sample area; and (5) within each band, three one-quarter meter square areas shall be randomly selected, and all macroscopic plant and animal life shall be identified within each square to as low a taxon as possible, and measured. Sampling techniques will follow those employed by biologist divers of the California State Department of Fish and Game.

In sandy areas, a 30-meter band transect, one meter wide, shall be established on the ocean bottom. Operations at each underwater station shall include: (1) recording of water temperature (may be measured from a boat), and estimated visibility and pelagic macrobiota at each 10-foot depth increment throughout the water column and at the bottom; (2) recording of general bottom description; (3) recording of height, period, and crest direction of ripple marks; (4) recording of amount, description, and location of detritus on bottom; (5) creation of a representative photographic record of the area sampled; and (6) within each band, three cores of at least 42.5 cm2 in area shall be randomly taken to a depth of 15 cm where possible, (the three cores may be taken from a boat) and the material removed sifted through at least a 1 mm mesh screen, and all organisms identified to as low a taxon as possible, enumerated, measured, and reproductive conditions assessed where feasible. Sampling techniques will follow those employed by biologist divers of the California State Department of Fish and Game.

For each epifauna and infauna, size frequency and distribution shall be shown for at least the three numerically largest populations identified to the lowest possible taxon and appropriate graphs showing the relationship between species frequency and population shall be plotted from each sample.

REGIONAL MONITORING

F. Kelp Bed Monitoring

The Discharger shall participate with other ocean dischargers in the San Diego Region in an annual regional kelp bed photographic survey. Kelp beds shall be monitored annually by means of vertical aerial infrared photography to determine the maximum

areal extent of the region's coastal kelp beds within the calendar year. Surveys shall be conducted as close as possible to the time when kelp bed canopies cover the greatest area. The entire San Diego Region coastline, from the international boundary to the San Diego Region / Santa Ana Region boundary, shall be photographed on the same day.

The images produced by the surveys shall be presented in the form of a 1:24,000 scale photo-mosaic of the entire San Diego Region coastline. Onshore reference points, locations of all ocean outfalls and diffusers, and the 30-foot (MLLW) and 60 foot (MLLW) depth contours shall be shown

The areal extent of the various kelp beds photographed in each survey shall be compared to that noted in surveys of previous years. Any significant losses, which persist for more than one year, shall be investigated by divers to determine the probable reason for the loss.

G. Intensive Monitoring

The Discharger shall perform the intensive monitoring as described by this MRP in conjunction with the next Southern California Coastal Water Research Project (SCCWRP) Bight Study.

The Discharger shall participate and coordinate with state and local agencies and other Dischargers in the San Diego Region in the development and implementation of a regional monitoring program (Bight Study) for the Pacific Ocean as directed by this Regional Water Board. The intent of the Bight Study is to maximize the efforts of all monitoring partners using a more cost-effective monitoring design and to best utilize the pooled resources of the region.

VII. OTHER MONITORING REQUIREMENTS

A. Solids Monitoring

Each POTW contributing treated effluent to the Ocean Outfall shall report, annually, the volume of screenings, sludges, grit, and other solids generated and/or removed during wastewater treatment and the locations where these waste materials are placed for disposal. Copies of all annual reports required by 40 CFR Part 503 shall be submitted to the Regional Water Board at the same time they are submitted to the USEPA.

B. Special Studies

1. The Discharger shall, within 270 days from the date of adoption of this permit, prepare and submit to the Regional Water Board an analysis of surf zone monitoring alternatives in the vicinity of the Ocean Outfall. This analysis shall address at a minimum, 1) identification of other interested parties that should have responsibilities for participating in surf zone monitoring in the vicinity of the Ocean Outfall; 2)

alternative techniques and options to accurately monitor and track the Ocean Outfall discharge plume to verify that the discharge plume does not enter the surf zones; and 3) identification of alternatives for identifying the bacterial source(s) in the vicinity of the mouth of San Juan Creek.

2. The Discharger shall, within 90 days from the date of adoption of this permit, develop and implement procedures for ensuring proper sampling and sample handling techniques are used at Monitoring Location M-001 (the sampling vault in the Dohenny State Beach Park through a sampling port in the outfall pipe) for all parameters that must be monitored in accordance with Sections IV.B and V of this Monitoring and Reporting Program. The procedures shall ensure compliance with all applicable 40 CFR Part 136 sampling and analysis protocol, including use of proper containers and sample preservatives, and compliance with sample holding times. A copy of the sampling and sample handling procedures to be used shall be submitted to the Regional Water Board.

VIII. REPORTING REQUIREMENTS

A. General Monitoring and Reporting Requirements

1. The Discharger shall comply with all Standard Provisions (Attachment D) related to monitoring, reporting, and recordkeeping.

2. The Discharger shall report all instances of noncompliance under (Attachment E) E.III, E.IV, E.V, and E.VI of Order No. R9-2006-0054 at the time monitoring reports are submitted.

3. Each year the Discharger shall submit an annual report to the Regional Water Board and USEPA Region 9 that contains tabular and graphical summaries of the monitoring data obtained during the previous year. The Discharger shall discuss the compliance record and corrective actions taken, or which may be taken, or which may be needed to bring the discharge into full compliance with the requirements of Order No. R9-2006-0054 and this MRP.

4. Laboratory method detection limits (MDLs), practical quantitation limits (PQLs), and minimum Levels (MLs) shall be identified for each constituent in the matrix being analyzed with all reported analytical data. Acceptance of data shall be based on demonstrated laboratory performance in accordance with MRP Provision IV.E.3. Current MLs are those published in Appendix II of the Ocean Plan.

B. Self Monitoring Reports (SMRs)

1. The Discharger shall submit Self-Monitoring Report (SMR) in accordance with subsection B.2 and B.3 below. At any time during the term of this permit, the State or Regional Water Board may notify the Discharger to electronically submit SMRs using the State Water Board's California Integrated Water Quality System (CIWQS)

Program Web site (http://www.waterboards.ca.gov/ciwqs/index.html). Until such notification is given, the Discharger shall submit hard copy SMRs in accordance with the requirements described below.

2. The Discharger shall report in a SMR the results for all monitoring specified in this MRP under Sections III through VIII. Additionally, the Discharger shall report in the SMR the results of any special studies, technical reports, and additional monitoring requirements required by Special Provisions – VI.C. The Discharger shall submit monthly, quarterly, semiannual, and annual SMRs including the results of all required monitoring using USEPA-approved test methods or other test methods specified in this Order. Monthly reports shall be due on the 1st day of the second month following the end of each calendar month; Quarterly reports shall be due on May 1, August 1, November 1, and February 1 following each calendar quarter; Semi-annual reports shall be due on August 1 and March 1 following each semi-annual period; Annual reports shall be due on March 1 following each calendar year.

3. SMRs shall be submitted at intervals and in a manner specified in Order No. R9-2006-0054 and in this MRP. Unless otherwise specified, monitoring reports shall be submitted to the Regional Water Board and to the USEPA Region 9 according to the following schedule:

Table 14. Reporting Schedule

Monitoring Frequency	Reporting Period	Report Due
Continuous, Daily, Weekly, or Monthly	All	By the first day of the second month after the month of sampling
Quarterly	Jan – March April – June July – September Oct - Dec	May 1 August 1 Nov 1 February 1
Semiannually	Jan – June July - Dec	August 1 March 1
Annually	Jan – Dec	March 1

4. The Discharger shall submit hard copy SMRs as required by subsection B1 above in accordance with the following requirements:

   a. The Discharger shall arrange all reported data in a tabular format. The data shall be summarized to clearly illustrate whether the Facilities are operating in compliance with interim and/or final effluent limitations.

   b. The Discharger shall attach a cover letter to the SMR. The information contained in the cover letter shall clearly identify violations of the WDRs; discuss corrective actions taken or planned; and the proposed time schedule for corrective actions. Identified violations must include a description of the requirement that was violated and a description of the violation.

c. SMRs must be submitted to the Regional Water Board, signed and certified as required by the Standard Provisions (Attachment D), to the address listed below:

Submit monitoring reports to:
California Regional Water Quality Control Board
San Diego Region
9174 Sky Park Court, Suite 100
San Diego, CA 92123-4340

With a copy sent to:
Regional Administrator
U.S. Environmental Protection Agency
Region 9, Attn: 65/MR, W-3
75 Hawthorne Street
San Francisco, CA 94105

C. Discharge Monitoring Reports (DMRs)

1. As described in Section VII.B.1 above, at any time during the term of this permit, the State or Regional Water Board may notify the Discharger to electronically submit self-monitoring reports. Until such notification is given, the Discharger shall submit DMRs in accordance with the requirements described below.

2. DMRs must be signed and certified as required by the Standard Provisions (Attachment D). The Discharge shall submit the original DMR and one copy of the DMR to the address listed below:

   State Water Resources Control Board
   Discharge Monitoring Report Processing Center
   Post Office Box 671
   Sacramento, CA 95812

3. All discharge monitoring results must be reported on the official USEPA pre-printed DMR forms (EPA Form 3320-1). Forms that are self-generated or modified cannot be accepted.

ATTACHMENT F – FACT SHEET

Table of Contents

I. Permit Information F-3
II. Facility Description F-4
A. Description of Wastewater and Biosolids Treatment or Controls F-4
B. Discharge Points and Receiving Waters F-8
C. Summary of Existing Requirements and Self-Monitoring Report (SMR) Data F-9
D. Compliance Summary F-11
E. Planned Changes F-13
III. Applicable Plans, Policies, and Regulations F-13
A. Legal Authorities F-13
B. California Environmental Quality Act (CEQA) F-13
C. State and Federal Regulations, Policies, and Plans F-13
D. Impaired Water Bodies on CWA 303(d) List F-16
E. Other Plans, Policies, or Regulations F-16
IV. Rationale for Effluent Limitations and Discharge Specifications F-17
A. Discharge Prohibitions F-17
B. Technology-Based Effluent Limitations F-17
C. Water Quality-Based Effluent Limitations (WQBELs) F-19
D. Final Effluent Limitations F-28
E. Performance Goals F-30
F. Antidegradation F-37
V. Rationale for Receiving Water Limitations F-39
VI. Rationale For Monitoring and Reporting Requirements F-39
A. Influent Monitoring F-40
B. Effluent Monitoring F-40
C. Whole Effluent Toxicity Testing Requirements F-41
D. Receiving Water Monitoring F-41
E. Other Monitoring Requirements F-43
VII. Rationale for Provisions F-45
A. Standard Provisions F-45
B. Special Provisions F-45
VIII. Public Participation F-49
A. Notification of Interested Parties F-49
B. Written Comments F-49
C. Public Hearing F-49
D. Waste Discharge Requirements Petitions F-50
E. Information and Copying F-50
F. Register of Interested Persons F-50
G. Additional Information F-50

List of Tables

Table 1. Facility Information F-3
Table 2. Dry-Weather Nuisance Flows Diverted to the SOCWA J.B. Latham RTP F-5
Table 3. Effluent Flows for Municipal Wastewater Treatment Plants Contributing to the Ocean Outfall F-7
Table 4. Discharges through the San Juan Creek Ocean Outfall F-8
Table 5. Historic Effluent Limitations and Monitoring Data F-9
Table 6. Toxic Pollutant Monitoring Requirements in Order No. 2000-13 ..... F-11
Table 7. Basin Plan Beneficial Uses of the Pacific Ocean F-14
Table 8. Ocean Plan Beneficial Uses of the Pacific Ocean F-14
Table 9. Summary of Technology-Based Effluent Limitations for Secondary Treatment Facilities Established by USEPA at 40 CFR 133.102 ..... F-18
Table 10. Summary of Technology-Based Effluent Limitations for POTWs Established by the Ocean Plan F-18
Table 11. Pollutants Having Background Concentrations F-24
Table 12. TCDD Equivalents Ocean Plan Objectives F-24
Table 13. New Toxic Pollutants and Corresponding Performance Goals Based on the 2005 California Ocean Plan F-25
Table 14. Toxic Pollutant Effluent Limitations or Performance Goals Based on the 2005 California Ocean Plan F-25
Table 15. Selected Radioactivity Effluent Limitations F-28
Table 16. Effluent Limitations based on Secondary Treatment Standards and Table A of the 2005 California Ocean Plan F-28
Table 17. Effluent Limitations based on 2005 California Ocean Plan F-30
Table 18. Performance Goals Based on the 2005 California Ocean Plan F-31
Table 19. Influent Monitoring Requirements F-40
Table 20. Sediment Monitoring Requirements F-43
Table 21. Infauna Monitoring Requirements F-44

Attachment F – Fact Sheet

As described in Section II of this Order, this Fact Sheet includes the legal requirements and technical rationale that serve as the basis for the requirements of this Order.

I. PERMIT INFORMATION

The following table summarizes administrative information related to the Facility.

Table 1. Facility Information

WDID	**9 000000175**
Discharger	**South Orange County Wastewater Authority**
Name of Facility	**San Juan Creek Ocean Outfall**
Facility Address	**Pacific Ocean off Dana Point**
Facility Contact, Title and Phone	**Tom Rosales, General Manager (949) 234-5421**
Authorized Persons to Sign and Submit Reports	**Tom Rosales, General Manager**
Mailing Address	**34156 Del Obispo Street Dana Point, CA 92629 Orange County**
Billing Address	**34156 Del Obispo Street Dana Point, CA 92629 Orange County**
Type of Facility	**Municipal POTW**
Major or Minor Facility	**Major**
Threat to Water Quality	**1**
Complexity	**A**
Pretreatment Program	**Yes**
Reclamation Requirements	**Producer and Distributor (regulated under separate WDRs)**
Facility Permitted Flow	**36.385 million gallons per day (MGD)**
Facility Design Flow	**Ocean outfall: 24 MGD (gravity flow) and 107 MGD (pumped flow)**
Watershed	**Pacific Ocean**
Receiving Water	**Pacific Ocean**
Receiving Water Type	**Ocean**

A. The South Orange County Wastewater Authority (SOCWA) (hereinafter Discharger) is a joint powers authority formed to reduce duplication and provide operational efficiency through consolidation. SOCWA is the legal successor to the Aliso Water Management Agency, the South East Regional Reclamation Authority, and the South Orange County Reclamation Authority. SOCWA is comprised of 10 member agencies including the City of Laguna Beach, the City of San Clemente, the City of San Juan Capistrano, El Toro Water District, Emerald Bay Service District, Irvine Ranch Water District, Moulton Niguel Water District (MNWD), Santa Margarita Water District (SMWD), South Coast Water District and Trabuco Canyon Water District.

B. SOCWA operates the San Juan Creek Ocean Outfall (Ocean Outfall), which receives treated effluent from the following municipal wastewater treatment plants; the SOCWA Jay B. Latham Regional Treatment Plant (RTP), the SMWD Chiquita Water Reclamation Plant (WRP), the MNWD 3A Reclamation Plant (RP), and the City of San Clemente RP. In addition, a number of dry-weather nuisance discharges from a number of sources and brine discharges from the City of San Juan Capistrano and the South Coast Water District are also routed to the Ocean Outfall.

C. The Discharger discharges effluent from a variety of sources through the Ocean Outfall to the Pacific Ocean, a water of the United States, and is currently regulated by Order No. 2000-13, which was adopted on February 9, 2000 and expired on February 9, 2005. In accordance with 40 CFR 122.6, the terms of the existing Order automatically continued in effect after the permit expiration date.

D. The Discharger filed a Report of Waste Discharge (RoWD) and submitted an application for renewal of its Waste Discharge Requirements (WDRs) and National Pollutant Discharge Elimination System (NPDES) permit on August 10, 2004. On June 27, 2005, the Discharger submitted an application for amendment of Order No. 2000-13 to allow discharges from an urban runoff treatment process in the City of San Clemente. Comments and a request for additional information related to the request for amendment of the Order were provided to the Discharger on August 8, 2005, and the Discharger submitted a response to the Regional Water Board on August 23, 2005. On December 6, 2005, the Discharger met with the Regional Water Board staff to discuss several issues related to reissuance of Order No. 2000-13. As a result of this meeting, the Discharger submitted additional information on January 9, 2006.

II. FACILITY DESCRIPTION

A. Description of Wastewater and Biosolids Treatment or Controls

Order No. 2000-13 (NPDES Permit No. CA0107417) establishes discharge prohibitions, limitations, and conditions to regulate discharges of effluent from the Ocean Outfall consisting of treated municipal wastewater, a number of untreated dry-weather nuisance flows, and waste brine to the Pacific Ocean. Order No. 2000-13 expired on February 9, 2005 and has been administratively extended until the adoption of this Order.

The Ocean Outfall receives discharges from facilities that provide wastewater treatment services to the following municipalities and areas: the City of San Juan Capistrano (population 33,826), the City of Mission Viejo (population 93,102), the City of San Clemente (population 49,936), the City of Rancho Santa Margarita (population 47,214), Capistrano Beach (population 11,500), and the City of Dana Point (population 18,000). All of these areas are serviced by separate sanitary sewers.

The SOCWA J.B. Latham RTP, located at 34156 Del Obispo Street in the City of Dana Point, adjacent to San Juan Creek, is a conventional activated sludge treatment facility. Wastewater treatment unit operations and processes are screening, grit removal, primary clarification and secondary treatment using an activated sludge process consisting of aeration and clarification. The liquid handling portion of the plant is normally operated as two separate plants, referred to as the 9 MGD side and the 4 MGD side. The plant has chlorination facilities which are not being used at this time. Waste sludge is anaerobically digested and then dewatered using centrifuges. Dewatered biosolids are hauled to a sanitary landfill for disposal. It should be noted that the SOCWA Jay B. Latham RTP also receives for treatment raw municipal wastewater from the SMWD Oso Creek WRP when this treatment facility is off-line. All effluent from the SOCWA Jay B. Latham RTP is discharged to the Pacific Ocean through the Ocean Outfall. The plant's design treatment capacity is 13.0 MGD.

The SOCWA Jay B. Latham RTP also receives nuisance flows from a variety of projects designed to keep dry-weather low-volume stormwater flows in specific storm drains from crossing the beaches to the ocean by diverting the untreated flows to the headworks of the SOCWA Jay B. Latham RTP. The table below summarizes the sources of these untreated dry weather nuisance flows to the SOCWA J.B. Latham RTP.

Table 2. Dry-Weather Nuisance Flows Diverted to the SOCWA J.B. Latham RTP

SOCWA Member Agency	Diversion Facility	Average Flow (gpd)	Flow Limit[1] (gpd)
City of San Juan Capistrano	Alipaz Diversion Facility	38,900	72,000
City of San Clemente (CSC)	City Multiple Facilities	NA	NA[2]
South Coast Water District	Multiple Facilities (including, Beach St., Beach Road, and Camino De Estrella)	8,500	80,000
	North Creek Diversion Facility	26,500	72,000
	Del Obispo Diversion Facilities	15,000	72,000
	Salt Creek	NA	10,000
	Headlands	NA	10,000
Total		**>88,900**	**>244,000**

[1] These are flow limitations placed on these discharges by SOCWA.
[2] The flow limit for these diversions is that they cannot exceed the remaining flow capacity of their treatment plant which is approximately 1.5 – 2 MGD.
NA – Not available

The SMWD Chiquita WRP, located at 28793 Ortego Highway in the city of San Juan Capistrano, is a high-rate trickling filter treatment facility. Wastewater treatment unit operations and processes are screening, grit removal, primary clarification and secondary treatment using a combination of high-rate trickling filtration, recirculation,

solids contact, and secondary clarification. The plant has chlorination facilities which are not being used at this time. Primary and secondary sludges are mixed, thickened, digested, dewatered, and transported either to a privately owned and operated composting facility in Riverside County or to a sanitary landfill for disposal. SMWD constructed advanced wastewater treatment facilities at the SMWD Chiquita WRP to provide recycled water for irrigation. Effluent not sent to the advanced treatment facilities for recycled water is discharged to the Ocean Outfall via the SMWD Chiquita Land Outfall. The plant's design treatment capacity is 9.0 MGD.

The MNWD 3A RP, located at 26801 Camino Capistrano, Mission Viejo, adjacent to Oso Creek, is a conventional activated sludge treatment facility. Wastewater treatment unit operations and processes are screening, aerated grit removal, primary sedimentation, aeration and secondary treatment using an activated sludge process consisting of aeration and clarification. Waste activated sludge is thickened by air flotation, pumped to an anaerobic digester for stabilization and subsequently dewatered using centrifuges. Dewatered sludge is either hauled to a sanitary landfill or to a privately owned and operated composting facility. This plant has chlorinating facilities, but only effluent intended to be used for irrigation is chlorinated. Secondary effluent is either directed to an on-site advanced water reclamation facility for further treatment or is discharged through the Ocean Outfall via the San Juan Basin Authority Bypass, jointly owned by MNWD and SMWD, which connects to the SMWD Chiquita Land Outfall. The design capacity for treatment is 6.0 MGD.

The SMWD Oso Creek WRP, located at 27204 East La Paz Road, Mission Viejo, adjacent to Oso Creek, is an activated biofilter process treatment facility. Wastewater treatment unit operations and processes at the SMWD Oso Creek WRP are microscreening and secondary treatment using a combination of biofilters and clarification. This plant has chlorination facilities, but only effluent intended to be used for irrigation is chlorinated. Waste solids and filter backwash is returned to the Oso Trabuco Interceptor Sewer. Secondary effluent is directed to an onsite advanced water reclamation facility for further treatment and pumped to the Upper Oso Reservoir. There is no connection from the Oso Creek WRP to the Ocean Outfall. In situations when the plant is off-line, the raw wastewater flows to the SOCWA Jay B. Latham RTP, where it is treated and then discharged through the Ocean Outfall. The design capacity for treatment is 3.0 MGD.

The City of San Clemente RP, located at 380 Avenida Pico, San Clemente, is a conventional activated sludge treatment facility. Wastewater treatment and unit operations and processes are screening, grit removal, primary clarification and secondary treatment using an activated sludge process consisting of aeration and clarification. The plant has chlorination facilities, but only effluent intended to be used for irrigation is chlorinated. Settled primary sludges and skimmings are pumped to a two-stage anaerobic digestion process. Waste sludge is thickened, digested, dewatered and transported to a sanitary landfill for disposal. Secondary effluent is either directed to an on-site advanced water reclamation facility for further treatment or

discharged through the Ocean Outfall via the San Clemente Land Outfall. The design capacity for treatment is 6.98 MGD.

Wastewaters from a number of sources are directed to the Ocean Outfall through several means:

- The San Clemente Land Outfall routes treated wastewater from the City of San Clemente Reclamation Plant northwesterly to the junction with the Ocean Outfall. This land outfall is approximately 4.4 miles long with a capacity of 14 MGD.
- The SMWD Chiquita Land Outfall extends from the SMWD Chiquita WRP southwesterly past the junction with the San Juan Basin Authority Bypass, to the junction with the Ocean Outfall. This land outfall is 6 miles long with a capacity of 42 MGD. This land outfall routes all effluent from the SMWD Chiquita WRP to the Ocean Outfall.
- The San Juan Basin Authority Bypass pipeline begins at the SMWD Oso Creek Barrier past the MNWD 3A Reclamation Plant and continues in a southerly direction to the junction with the SMWD Chiquita Land Outfall. This land outfall is 5.9 miles long with a capacity of 6 MGD. This land outfall routes all effluent from the MNWD 3A Reclamation Plant to the Ocean Outfall.

A summary of the flows from the municipal wastewater treatment plants, as reported in the RoWD, is provided in the table below.

Table 3. Effluent Flows for Municipal Wastewater Treatment Plants Contributing to the Ocean Outfall

Treatment Facility	Existing Secondary Treatment Design Capacity (MGD)	2003 Average Discharge Rate to SOCWA San Juan Creek Ocean Outfall (MGD)	January 2001- December 2003 Data	
			Maximum Effluent Flow From Facility (MGD)	Average Effluent Flow From Facility (MGD)
SOCWA Jay B. Latham Regional Treatment Plant	13.0	9.05	14.5	9.34
SMWD Chiquita Reclamation Plant	9.0	5.50	7.36	4.84
MNWS 3A Reclamation Plant	6.0	2.44	5.48	2.23
SMWD Oso Creek Water Reclamation Plant	3.0 [1]	0 [1]	NA	NA

Treatment Facility	Existing Secondary Treatment Design Capacity (MGD)	2003 Average Discharge Rate to SOCWA San Juan Creek Ocean Outfall (MGD)	January 2001- December 2003 Data	
			Maximum Effluent Flow From Facility (MGD)	Average Effluent Flow From Facility (MGD)
City of San Clemente Reclamation Plant	6.98	4.33	6.78	4.26
Total	34.98	21.32	34.12	20.67

[1] Note that SMWD Oso Creek WRP does not discharge treated wastewater directly through the Ocean Outfall; treated water is reclaimed. However, when the reclamation plant is off-line, the raw wastewater is sent to the SOCWA Jay B. Latham RTP for treatment.
NA – Not available

In June 2005, SOCWA applied for authorization to discharge from an urban runoff treatment process in the City of San Clemente. In particular, the City has developed a management program to mitigate the impacts of dry weather nuisance flow from the Segunda Deshecha (M02) Flood Control Channel, which currently flow directly onto the North Beach and directly into the ocean. This management program, funded with a grant from the State Proposition 40 for the Clean Beach Grant Program, involves diversion of dry weather flows through screens, pressure filtration, and then discharge to the San Clemente Land Outfall. The treatment system will be located at the city of San Clemente RP. According to the application, the average flows through the Segunda Deshecha (M02) Flood Control Channel ranged from 0.43 to 1.3 cubic feet per second (cfs); the design is based on 1.5 cfs (1 MGD). The backwash water from the treatment facility will be discharged into the City of San Clemente Reclamation Plant sewer collection system. Depending on availability of funding, the City is also considering the addition of ultraviolet (UV) light disinfection to the treatment system, as well as constructing a pipeline to the North Beach for discharge after treatment (as a secondary method of disposal).

The Ocean Outfall also contains a discharge from the City of San Juan Capistrano Reverse Osmosis (RO) Water Treatment Plant. The treatment plant consists of pretreatment for the removal of iron, manganese, and hardness, followed by RO, aeration, pH adjustment and disinfection. The resulting brine discharge is sent through the Ocean Outfall; estimated flows are 0.73 MGD.

As described in the report of waste discharge, SOCWA also anticipates the future addition of discharges from the South Coast Water District groundwater recovery facility (GRF). According to SOCWA, the GRF is currently under construction, the completion of which is anticipated in March/April 2007. The initial capacity of the GRF will be 976 acre feet of extracted water, producing approximately 800 acre feet of reclaimed water.

At this production capacity, the brine flow to the Ocean Outfall is estimated to be approximately 0.125 MGD. The flow will be directed to the SMWD Chiquita Land Outfall Line.

A summary of the component flows that constitute the total flow from the Ocean Outfall is provided in the table below.

Table 4. Discharges through the San Juan Creek Ocean Outfall

Source	Design Flow (MGD)*	Existing Average Flow (MGD)[1]
Municipal Wastewater Treatment Plants	34.98	21.3
Segunda Deshecha (M02) Flood Control Channel (Anticipated)	1	--
City of San Juan Capistrano RO Water Treatment Plant Brine Discharge	0.73	0.73
South Coast Water District GRF (Anticipated)	0.125	--
Total	36.835	22.03

[1] Source: SOCWA August 10, 2004 RoWD

B. Discharge Points and Receiving Waters

The Discharger operates the Ocean Outfall, which has been in existence since 1978 and extends southwesterly approximately 10,550 feet (ft) offshore in a southwest direction from Doheny State Beach at San Juan Creek. The inshore end of the diffuser is located approximately 10,334 feet offshore at a depth of approximately 100 ft. The Ocean Outfall terminates with a 216 foot diffuser collinear with the rest of the outfall and extends 1,272 feet in a northwesterly direction perpendicular to the rest of the outfall and terminates at Latitude 33°26'10" North, Longitude 117°41'53" West. The 216 foot diffuser pipe is configured with 16 – 2.85 inch ports; the 1,272 foot diffuser pipe is configured with 107 – 3.03 inch ports and two - 5 inch ports at the terminal end. Ports on the diffuser pipes are spaced 24 inches apart on each side of the diffuser pipe and staggered.

The design capacity of the Ocean Outfall is 24 MGD for gravity flow; the design capacity of the Ocean Outfall using pumping facilities is 107 MGD. Effluent pumping to the Ocean Outfall is required when peak flow conditions coincide with extreme high tide conditions. In the previous Order the Discharger was subject to a flow limitation of 30.0 MGD. As reported in the RoWD, the average flow rate discharging through the Ocean Outfall is approximately 20 - 22 MGD; the maximum daily flow was reported as 31 MGD.

For Order No. 2000-13 SOCWA determined the minimum initial dilution for the Ocean Outfall, using the computer model Visual Plumes, to be 100. The Visual Plumes initial dilution factor is based on 30.00 MGD of secondary effluent and 1.05 MGD of brine wastes.

C. Summary of Existing Requirements and Self-Monitoring Report (SMR) Data

Effluent limitations contained in Order No. 2000-13 for major constituents and properties of wastewater for discharges from the Ocean Outfall, and representative monitoring data for January 2000 through November 2005 are provided in the table below.

Table 5. Historic Effluent Limitations and Monitoring Data

Parameter	Units	Effluent Limitation[1]			Monitoring Data (From January 2000 – November 2005)	
		Monthly Average (30-day)	Weekly Average (7-day)	Maximum at any time	Mean	Maximum
Flow	MGD	--	--	30	21.3	44.2
Carbonaceous Biochemical Oxygen Demand ($CBOD_5$)	mg/L	25	40	45	7.5	56
	lbs/day	6225	10008	11259	1363	19325
Total Suspended Solids (TSS)	mg/L	30	45	50	11.6	83.2
	lbs/day	7506	11259	12510	2113	28712
pH	pH units	6.0 - 9.0			6.5 [2]	8.2
Grease and Oil	mg/L	25	40	75	3.6	10.7
	lbs/day	6255	10008	18765	655	2184
Settleable Solids	mL/L	1	1.5	3	0.4	7
Turbidity	NTU	75	100	225	5.2	19.6
Acute Toxicity	TU_a	1.5	2	2.5	0.55	1.09

[1] These limitations represent those using an initial dilution factor of 100.
[2] This data point represents the minimum reported pH.

The effluent discharged through the Ocean Outfall has exceeded the flow effluent limitation on 13 occasions during the period February 2001 through February 2006. Based on Flow sample results, the maximum flow effluent limitation was exceeded on February 12, 2001 (31.2 MGD), October 21 and 27, 2004 (30.7 and 39.3 MGD), January 8-11, 2005 (30.2, 41.4, 44.2, 33.9 MGD), February 11, 21-23, 25, 2005 (30.6, 36.5, 34.2, 31, 30.4 MGD), and March 8, 2005 (31.4 MGD). All exceeded flow limitations were attributed to heavy rainfall increasing flow.

The effluent limitations for settleable solids (SS) were exceeded several times over the past 5 years; the weekly (7-day) average was exceeded on 11 occasions, and the maximum limitation was exceeded five times. Based on SS sample results the weekly average effluent limitation was exceeded for the period October 6-8, 2000 (all reported values at 1.6 ml/L), for the period December 24-30, 2002 (reported values ranged form 1.9 ml/L to 2 ml/L), and on September 7, 2005 (1.6 ml/L). The SS maximum value

limitation was exceeded on October 6, 2000 (5 ml/L), November 11, 2002 (3.2 ml/L), December 24, 2002 (7 ml/L), October 4, 2004 (4 ml/L), and September 1, 2005 (5 ml/L). The following explanations were provided by the Discharger for several of the effluent limit exceedances:

- The violation on November 11, 2002 was attributed to periodic episodes of floc in the final effluent of the SMWD Chiquita Reclamation Plant.
- The violation on December 24, 2002 was due to a blower motor malfunction at the J.B. Latham Treatment that created a power failure.
- The violations in October 2004 were due to several days of heavy rainfall creating increased hydraulic loading.
- The violation on September 1, 2005 was attributed to bulking in the secondary clarifiers and solids being lost over the weirs.

Effluent limitations for $CBOD_5$ and TSS were exceeded on one occasion each. $CBOD_5$ and TSS were exceeded on January 9, 2005 (56 mg/L for $CBOD_5$ and 83.2 for TSS). The Discharger stated that the exceeded limitations for TSS and $CBOD_5$ on January 9, 2005 were due to measurable rain causing hydraulic overload.

Order No. 2000-013 also requires that the 30-day average removals of $CBOD_5$ and TSS be 85 percent or greater. All data submitted from January 2000 through February 2006 indicate compliance with the percent removal requirements for $CBOD_5$ and TSS.

Order No. 2000-13 established effluent limitations for toxic pollutants based on water quality objectives of the 1997 Ocean Plan and required monitoring at the intervals shown in Table 6 below.

Table 6. Toxic Pollutant Monitoring Requirements in Order No. 2000-13

Toxic Pollutant from Table B of the Ocean Plan (1997)	Monitoring Frequency
Ammonia	Monthly
Total Chlorine Residual	Daily
Chronic Toxicity	Monthly
Table B pollutants listed with Objectives for the Protection of Marine Aquatic Life from the Ocean Plan (1997) except ammonia, total residual chlorine, and chronic toxicity	Quarterly
All other Table B pollutants from the Ocean Plan (1997)	Semi-Annually

Monitoring of toxic pollutants for the period January 2000 through February 2006 showed the following results:

1. During this period, effluent limitations for toxic pollutants from Table B of the Ocean Plan were not exceeded with one exception. Effluent limitations for total chlorine residual (TCR) exceeded on one occasion. TCR was exceeded on September 21, 2005 (reported value was 1.0 mg/L; daily maximum effluent limitation is 0.808 mg/L).

2. Analytical results reported by the Discharger indicate that the method detection limits used for analyses of several pollutants were, at times, greater than the corresponding effluent limitation and/or the Minimum Level established by the Ocean Plan (2001). These pollutants include mercury, cyanide, acrylonitrile, aldrin, benzidine, bis (2-chloroethyl) ether, chlordane, DDT, 3,3-dichlorobenzidine, dieldrin, heptachlor, hexachlorobenzene, PCBs, and toxaphene.

D. Compliance Summary

As described above, the Discharger has complied with the effluent limitations of Order No. 2000-13 with some exceptions. Instances of non-compliance resulting in monetary penalties are described as follows:

1. The Discharger was issued an Administrative Assessment of Civil Liability containing a $3,000 Mandatory Minimum Penalty on May 30, 2003 for violation of Order No. 2000-13: one violation of the settleable solids effluent limitation on December 24, 2003. The settleable solids violation was a serious violation that required mandatory minimum penalty of $3,000 pursuant to Water Code Section 13385(h).

2. The Discharger was issued an Administrative Assessment of Civil Liability containing a $9,000 Mandatory Minimum Penalty on June 17, 2005 for three violations of Order No. 2000-13: one violation of the effluent limitation for the daily maximum mass emissions rate of $CBOD_5$, one violation of the established effluent limitation for daily maximum mass emissions rate of TSS, one violation of the established effluent limitation for daily maximum concentration of TSS. All three violations were serious violations and required mandatory minimum penalties of $3,000 each pursuant to Water Code Section 13385(h).

On December 7, 2005, a compliance evaluation inspection (CEI) was performed at the SOCWA Jay B. Latham RTP to determine compliance with NPDES permit conditions. A summary of the major findings from the CEI are provided below:

- Sampling of the combined effluent flows from the Ocean Outfall is performed in a sampling vault in the Dohenny State Beach Park through a sampling port in the outfall pipe. According to SOCWA, samples are taken from the effluent pipe by pumping through a ISCO sampler contained in the sampling vault and located approximately 6-8 feet above the sampling port. The reason for using the ISCO sampler to extract samples is employee safety. It was noted however, that use of the ISCO sampler to pump effluent (through plastic tubing) to a sample vessel may not be appropriate for certain parameters (e.g., oil and grease, volatile organics).
- The thermometer located within the influent sample collection cooler for Plant 2 (South Coast Water District) read 6.5 degrees Celsius at the time of the inspection.

The sample preservation requirements contained in 40 CFR Part 136 requires samples to be chilled to no more than 4 degrees Celsius.

On February 28, 2006, a CEI was performed at the SMWD Chiquita RP to determine compliance with NPDES permit conditions. No major issues were identified as a result of the inspection.

On February 28, 2006, a CEI was performed at the MNWS 3A RP to determine compliance with NPDES permit conditions. A summary of the major findings from the CEI are provided below:

- The chain-of-custodies are kept at the contract lab. The operators who collect the samples do not begin to fill out the chain-of-custody until they arrive at the lab with the samples. The accuracy of the chain-of-custodies could be better maintained if they were initiated at the facility when the samples were collected. This is especially true since pH and residual chlorine are analyzed at the contract lab and need to meet a 15 minute holding time.

On December 9, 2005, a compliance evaluation inspection was performed at the City of San Clemente RP to determine compliance with NPDES permit conditions. A summary of the major findings from the CEI are provided below:

- Influent and effluent data summaries are generated on a monthly basis and are provided to SOCWA for use in reporting influent flows and percent removal values. In the month of September 2005 the facility experienced exceedances in the effluent limitations for TSS, SS, and $CBOD_5$ (September 13, 2005: TSS = 159.9 mg/L, SS = 25.0 mg/L, $CBOD_5$ = 60.0 mg/L; and September 14, 2005: TSS = 61.4 mg/L). However, the facility representative did not believe that SOCWA had reported exceedances during that month. Therefore, the facility's exceedances did not result in permit exceedances since the permit limitations apply to the combined effluent in the outfall, as reported by SOCWA.
- The facility has been experiencing plant upsets since some time in 2003. As a result of effluent limitation exceedances caused by the upsets the Regional Water Board issued a Notice of Violation (NOV R9-2004-0289), which required a 120-day continuous monitoring period. The cause of these upsets has yet to be determined, but thorough documentation of the plant upsets has been provided to the Regional Water Board since September 2004. The facility completed its 120-day continuous monitoring period on January 17, 2005 (details are contained in the report to the Water Board dated February 2, 2005). Since that time the facility has continued to generate Incident Report Forms for each upset. Additionally, the facility contracted an engineering firm to conduct an operational assessment of the facility. Recommendations included but were not limited to: changes in staffing, automated DO controls, and new diffusers. The facility had begun to implement some of the staffing changes at the time of the inspection (e.g., an industrial waste inspector had been hired). The facility representative stated that the facility was planning to implement automated DO controls for the aeration basins. Therefore, at the time of

the inspection, it appeared as though the facility was working to minimize plant upsets by improving its process, tracking operational information, and increasing staffing.

E. Planned Changes

Although there are a variety of capital improvements projects planned for each of the contributing municipal wastewater treatments to the Ocean Outfall, there are no major planned changes that would affect capacity of the treatment plants or effluent quality.

III. APPLICABLE PLANS, POLICIES, AND REGULATIONS

The requirements contained in the proposed Order are based on the requirements and authorities described in this section.

A. Legal Authorities

This Order is issued pursuant to section 402 of the federal Clean Water Act (CWA) and implementing regulations adopted by the USEPA and Chapter 5.5, Division 7 of the California Water Code (CWC). It shall serve as a NPDES permit for point source discharges from the Discharger's Facilities to the Pacific Ocean at Outfall 001. This Order also contains discharge prohibitions, effluent limitations, discharge specifications, provisions, and other requirements pursuant to the CWC.

B. California Environmental Quality Act (CEQA)

This action to adopt an NPDES permit is exempt from the provisions of the California Environmental Quality Act (Public Resources Code Section 21100, et seq.) in accordance with Section 13389 of the CWC.

C. State and Federal Regulations, Policies, and Plans

1. **Water Quality Control Plans.** The Regional Water Board adopted a *Water Quality Control Plan for the San Diego Basin* (hereinafter Basin Plan) on September 8, 1994. The Basin Plan was subsequently approved by the State Water Board on December 13, 1994. Subsequent revisions to the Basin Plan have also been adopted by the Regional Water Board and approved by the State Water Board. The Basin Plan designates beneficial uses, establishes water quality objectives, and contains implementation programs and policies to achieve those objectives for all waters addressed through the plan. Beneficial uses applicable to the Pacific Ocean are shown in Table 7 below.

Table 7. Basin Plan Beneficial Uses of the Pacific Ocean

Discharge Point	Receiving Water Name	Beneficial Use
Outfall 001	Pacific Ocean	Industrial Service Supply; Navigation; Contact Water Recreation; Non-Contact Water Recreation; Commercial and Sport Fishing; Preservation of Biological Habitats of Special Significance; Wildlife Habitat; Rare, Threatened, or Endangered Species; Marine Habitat; Aquaculture; Migration of Aquatic Organisms; Spawning, Reproduction, and/or Early Development; Shellfish Harvesting

The Basin Plan relies primarily on the requirements of the *Water Quality Control Plan for Ocean Waters of California* (Ocean Plan) for protection of the beneficial uses of the State ocean waters. The Basin Plan, however, may contain additional water quality objectives applicable to the Discharger.

On November 16, 2000 the State Water Board adopted a revised Ocean Plan. The revised Ocean Plan became effective on December 3, 2001. The Ocean Plan was amended in April 2005 to address reasonable potential and Areas of Special Biological Significance. The Ocean Plan contains water quality objectives and beneficial uses for the ocean waters of California. The beneficial uses of State ocean waters to be protected are summarized in Table 8 below.

Table 8. Ocean Plan Beneficial Uses of the Pacific Ocean

Discharge Point	Receiving Water Name	Beneficial Use
Outfall 001	Pacific Ocean	Industrial Water Supply; Water Contact and Non-Contact Recreation, Including Aesthetic Enjoyment; Navigation; Commercial and Sport Fishing; Mariculture; Preservation and Enhancement of Designated Areas of Special Biological Significance; Rare and Endangered Species; Marine Habitat; Fish Migration; Fish Spawning and Shellfish Harvesting

In order to protect these beneficial uses, the Ocean Plan establishes water quality objectives (for bacterial, physical, chemical, and biological characteristics and for radioactivity), general requirements for management of waste discharged to the ocean, quality requirements for waste discharges (effluent quality requirements), discharge prohibitions, and general provisions.

The State Water Board adopted a *Water Quality Control Plan for Control of Temperature in the Coastal and Interstate Water and Enclosed Bays and Estuaries of California* (Thermal Plan) on May 18, 1972, and amended this plan on September 18, 1975. The Thermal plan contains temperature objectives for coastal waters.

Requirements of this Order specifically implement the applicable Water Quality Control Plans.

2. **Antidegradation Policy.** 40 CFR 131.12 requires that State water quality standards include an antidegradation policy consistent with the federal policy. The State Water Board established California's antidegradation policy in State Water Board Resolution No. 68-16, which incorporates the requirements of the federal antidegradation policy. Resolution No. 68-16 requires that existing water quality is maintained unless degradation is justified based on specific findings. As discussed in detail in this Fact Sheet, the permitted discharge is consistent with the antidegradation provision of 40 CFR 131.12 and State Water Board Resolution No. 68-16.

3. **Anti-Backsliding Requirements.** Sections 402(o) and 303(d)(4) of the CWA and 40 CFR 122.44(l) prohibit backsliding in NPDES permits. These anti-backsliding provisions require effluent limitations in a reissued permit to be as stringent as those in the previous permit, with some exceptions where limitations may be relaxed. Some effluent limitations in this Order are less stringent than those in the previous Order or have been removed, consistent with the anti-backsliding requirements of the CWA and federal regulations. Technology-based acute toxicity effluent limitations have been replaced with water quality-based acute toxicity effluent limitations consistent with Sections 402(o) and 303(d)(4) of the CWA and 40 CFR 122.44(1). Concentration and mass emission rate effluent limitations for several constituents listed under Table B of the Ocean Plan, including silver, have been removed as a result of new information from a reasonable potential analysis and is consistent with Section 402(o) of the CWA and 40 CFR 122.44(l). Several concentration effluent limitations, like for silver, have been replaced with numerically lower performance goals based on the relaxed water quality objectives that were introduced in the 2001 Ocean Plan. Mass emission rate effluent limitations have been replaced with numerically higher performance goals as a result of greater flowrates stemming from material and alterations or additions to the permitted facilities.

4. **Monitoring and Reporting Requirements.** 40 CFR 122.48 requires that all NPDES permits specify requirements for recording and reporting monitoring results. Sections 13267 and 13383 of the CWC authorize the Regional Water Boards to require technical and monitoring reports. The Monitoring and Reporting Program (Attachment E) establishes monitoring and reporting requirements to implement federal and State requirements.

D. Impaired Water Bodies on CWA 303(d) List

On June 5 and July 25, 2003, the USEPA approved the list of impaired water bodies, prepared by the State Water Board pursuant to Section 303 (d) of the CWA, which are not expected to meet applicable water quality standards after implementation of technology-based effluent limitations for point sources. The 303(d) list includes the following sections of Pacific Ocean shoreline within the proximity of the Ocean Outfall as impaired for bacteria indicators:

1. 1.0 miles of Pacific Ocean shoreline at San Juan Creek.
2. 119 acres of Pacific Ocean at Dana Point Harbor (impairment located at Baby Beach).
3. 6.3 acres of Pacific Ocean shoreline at the mouth of San Juan Creek.

Impairment has been detected at the shorelines indicated above; however, the receiving waters in the immediate vicinity of the Outfall 001 are not included on the current 303(d) list.

E. Other Plans, Policies and Regulations

1. **Secondary Treatment Regulations.** 40 CFR Part 133 establishes the minimum levels of effluent quality to be achieved by secondary treatment. These limitations, established by the USEPA, are incorporated into Order No. R9-2006-0054, except where more stringent limitations are required by other applicable plans, policies, or regulations.

2. **Storm Water.** Sewage treatment works with a design flow of 1.0 MGD or greater are required to comply with Water Quality Order No. 97-03-DWQ (NPDES General Permit No. CAS000001), Waste Discharge Requirements for Discharges of Storm Water Associated with Industrial Activity, Excluding Construction Activities. The Discharger shall file a Notice of Intent within 60 days of adoption of this Order (unless already submitted under the previous Order) and comply with Order No. 97-03-DWQ or the Discharger shall provide certification to the Regional Water Board that all storm water is captured and treated on-site and no storm water is discharged or allowed to run off-site from the facility.

3. **Pretreatment.** Discharges of pollutants that may interfere with operations of a POTW are regulated by USEPA's pretreatment regulations at 40 CFR Part 403. These regulations require Dischargers to develop and implement pretreatment programs that impose limitations on industrial users of the POTW if the POTW treats 5 MGD of wastewater or more.

IV. RATIONALE FOR EFFLUENT LIMITATIONS AND DISCHARGE SPECIFICATIONS

The CWA requires point source discharges to control the amount of conventional, non-conventional, and toxic pollutants that are discharged into the waters of the United States. The control of pollutants discharged is established through effluent limitations; and other requirements in NPDES permits. There are two principal bases for effluent limitations: 40 CFR 122.44(a) requires that permits include applicable technology-based limitations and standards; and 40 CFR 122.44(d) requires that permits include WQBELs to attain and maintain applicable numeric and narrative water quality objective to protect the beneficial uses of the receiving water. Where numeric water quality objectives have not been established, three options exist to protect water quality using narrative water quality objectives: 1) 40 CFR 122.44(d) specifies that WQBELs may be established using USEPA criteria guidance under CWA section 304(a); 2) proposed State criteria or a State

policy interpreting narrative objective supplemented with other relevant information may be used; or 3) an indicator parameter may be established.

A. Discharge Prohibitions

Prohibition A.1 of Order No. 2000-13 has been modified to clearly define what types of discharges are prohibited by this Order. The modified prohibition is contained in Section III.A of Order No. R9-2006-0054.

1. Prohibition A requires all discharges from the SOCWA Jay B. Latham Regional Treatment Plant (RTP), the SMWD Chiquita Water Reclamation Plant (WRP), the MNWD 3A Reclamation Plant (RP), and the City of San Clemente RP to be treated by at least a secondary treatment process. The USEPA states that "The biological treatment component of a municipal treatment plant is termed secondary treatment and is usually preceded by simple settling (primary treatment). Secondary treatment standards are established by EPA for publicly owned treatment works (POTWs) and reflect the performance of secondary wastewater treatment plants. These technology-based regulations apply to all municipal wastewater treatment plants and represents the minimum level of effluent quality attainable by secondary treatment, as reflected in terms of 5-day biochemical oxygen demand (BOD_5) and total suspended solids (TSS) removal." (See http://cfpub.epa.gov/npdes/techbasedpermitting/sectreat.cfm?program_id=15). At this time, USEPA has not promulgated any provisions that would allow a discharge of treated municipal wastewater to waters of the US that has not been treated through a secondary treatment process or a process equivalent to secondary treatment, except under bypass and upset conditions recognized under Provisions I.G and I.H of Attachment D – Standard Provisions.

   Prohibition A also prohibits discharge from the SOCWA Jay B. Latham Regional Treatment Plant (RTP), the SMWD Chiquita Water Reclamation Plant (WRP), the MNWD 3A Reclamation Plant (RP), and the City of San Clemente RP that do not comply with the effluent limitations contained in this Order, or a discharge to a location other than the San Juan Creek Ocean Outfall, unless specifically regulated by this Order or separate waste discharge requirements. The Regional Water Board's Order No. 97-52 establishes reclamation requirements for the reuse of effluent form the the SMWD Chiquita Water Reclamation Plant (WRP), the MNWD 3A Reclamation Plant (RP), and the City of San Clemente RP in the San Diego Region. Regional Water Board's Order No. 96-04 prohibits sanitary sewer overflows and also applies to SOCWA.

2. Section III.B of this Order lists additional discharge prohibitions from the Basin Plan. California Water Coe Section 13243 provides that the Regional Water Board, in a water quality control plan or in waste discharge requirements, may specify certain conditions where the discharge of wastes or certain types of wastes that could affect the quality of water s of the state is prohibited. Inclusion of the Basin Plan prohibitions in the Order implements the reuirements of the Basin Plan. The Basin

Plan prohibitions included in this Order are a subset of the complete set of Basin Plan prohibitions. Certain Basin Plan prohibitions did not apply to SOCWA's discharge and were not included in this Order.

3. Prohibitions C, D, and E in Section III of this Order are additional discharge prohibitions from the 2005 California Ocean Plan. Prohibition C prohibits the discharge of waste to Areas of Special Biological Significance. Prohibition D prohibits the discharge of waste sludge and sludge digester supernatant to the ocean. Prohibition E prohibits the discharge of untreated waste that has bypassed all treatment processes, unless excepted in accordance with Ocean Plan Provision III.I. Discharges subject to this prohibition would include the discharge to the ocean of raw municipal wastewater that has not undergone any treatment through any of the treatment plant processes, and sanitary sewer overflows to the ocean.

B. Technology-Based Effluent Limitations

1. Scope and Authority

USEPA regulations at 40 CFR 122.44(a)(1) require permits to include technology-based effluent limitations and standards based on limitations and standards promulgated by the USEPA authorized under Section 301 of the CWA. USEPA promulgated technology-based effluent limitations and standards for publicly owned treatment works (POTWs) as secondary treatment regulations at 40 CFR Part 133.

Section III.B of the Ocean Plan prescribes effluent limitations that apply to POTWs and industrial discharges for which effluent limitations guidelines have not been established pursuant to Sections 301, 302, 304, or 306 of the federal CWA. Specifically Section III.B.3 of the Ocean Plan states that compliance with Table A effluent limitations shall be the minimum level of treatment acceptable under the Ocean Plan, and shall define reasonable treatment and waste control technology.

2. Applicable Technology-Based Effluent Limitations

Pursuant to Sections 301 (b) (1) (B) and 304 (d) (1) of the CWA, USEPA has established standards of performance for secondary treatment at 40 CFR Part 133. Secondary treatment is defined in terms of three parameters – 5-day biochemical oxygen demand (BOD_5), TSS, and pH. The following table summarizes the technology-based requirements for secondary treatment:

Table 9. Summary of Technology-Based Effluent Limitations for Secondary Treatment Facilities Established by USEPA at 40 CFR 133.102

Constituent	Monthly Average	Weekly Average	Percent Removal (%)
BOD_5	30 mg/L	45 mg/L	85
TSS	30 mg/L	45 mg/L	85
pH	6.0 to 9.0 standard units		

Effluent limitations for the parameters BOD_5, TSS, and pH must be included in NPDES permits for POTWs; however, the parameter $CBOD_5$ (5-day carbonaceous biochemical oxygen demand) may be substituted for BOD_5 at the option of the permitting authority. The secondary treatment standards for $CBOD_5$ are 25 mg/L (monthly average), 40 mg/L (weekly average), and 85 percent removal. Consistent with the effluent limitations in the existing Order, limitations for $CBOD_5$ were incorporated into the permit in lieu of BOD_5 limitations.

As described in Section II of this Fact Sheet, SOCWA operates the Ocean Outfall which receives treated effluent from the following municipal wastewater treatment plants; the SOCWA Jay B. Latham RTP, the SMWD Chiquita WRP, the MNWD 3A RP, and the City of San Clemente RP. In accordance with the definition contained in 40 CFR 122.2, each of these wastewater treatment plants is considered a POTW. Further, in accordance with 40 CFR 125.3(a)(1), all POTWs are required to achieve the secondary treatment standards contained in 40 CFR Part 133. Therefore, the permit independently applies the secondary treatment standards to the SOCWA Jay B. Latham RTP, the SMWD Chiquita WRP, the MNWD 3A RP, and the City of San Clemente RP.

Table A of the Ocean Plan establishes the following technology-based effluent limitations for POTWs and industrial discharges not subject to federal effluent limitations guidelines:

Table 10. Summary of Technology-Based Effluent Limitations Included in Table A of the Ocean Plan

Constituent	Monthly Average	Weekly Average	Instantaneous Maximum	Percent Removal (%)
Oil and Grease	25 mg/L	40 mg/L	75 mg/L	
TSS				75 [1]
Settleable Solids	1.0 mL/L	1.5 mL/L	3.0 mL/L	
Turbidity	75	100	225	
pH	6.0 to 9.0 standard units			

[1] Dischargers shall, as a monthly average, remove 75% of TSS from the influent stream before discharging to the ocean, except that the effluent limitation to be met shall not be lower than 60 mg/L.

The Table A effluent limitations will be applied to each of the contributing municipal wastewater treatment plants. However, the TSS percent removal requirement and standards under 40 CFR Part 133 for POTWs are more stringent than the Ocean Plan requirement; the more stringent TSS requirements are included in Order No. R9-2006-0054 for the discharges from the SOCWA Jay B. Latham RTP, the SMWD Chiquita WRP, the MNWD 3A RP, and the City of San Clemente RP. The Discharger had requested that the settleable solids limitations that were also included in Order 2000-13 be excluded from the reissued permit. Their rationale included reference to the San Francisco Regional Water Board's 2003 Basin Plan amendments that clarified that the settleable matter effluent limitation does not apply to secondary and advanced

sewage treatment facilities. The effluent limitations that were amended in Water Quality Control Plan for the San Francisco Bay Region, however, apply to all sewage treatment facilities that discharge to inland surface waters and enclosed bays and estuaries. As described in Section III.C.1 of this Fact Sheet, the Ocean Outfall discharges are subject to the Ocean Plan and the Water Quality Control Plan for the San Diego Basin, neither of which currently includes provisions for excluding the effluent limitations for settleable solids.

The Ocean Plan Table A effluent limitations will also be applied to the industrial discharges to the ocean through the Ocean Outfall, including discharges from the Segunda Deshecha (M02) Flood Control Channel, the City of San Juan RO Water Treatment Plant, and the South Coast Water District GRF. However, due to the nature of the industrial discharges, the 60 mg/L monthly average TSS limitation will be applied in lieu of the 75% removal requirement.

Order No. R9-2006-0054 does not retain the maximum at anytime concentration and mass emission rate limitations for $CBOD_5$ and TSS contained in Order No. 2000-13 and previous permits for the Discharger which were established using best professional judgment. Recent attempts to derive maximum at anytime limitations based on the secondary treatment standards at 40 CFR 133 using appropriate statistical approaches did not yield similar results as the previous maximum at anytime limitations; therefore, based on this new information, retaining the previous maximum at anytime limitations in Order No. R9-2006-0054 is not supported.

C. Water Quality-Based Effluent Limitations (WQBELs)

1. Scope and Authority

USEPA regulations at 40 CFR 122.44 (d) (1) (i) require permits to include WQBELs for pollutants (including toxicity) that are or may be discharged at levels, which cause, have reasonable potential to cause, or contribute to an excursion above any state water quality standard. The establishment of WQBELs in this Order, based on water quality objectives contained in the Ocean Plan, is in accordance with the USEPA regulations.

2. Applicable Beneficial Uses and Water Quality Objectives

a. Basin Plan

For all ocean waters of the State, the Basin Plan and its subsequent revisions establish the beneficial uses described previously in this Fact Sheet. The Basin Plan includes the following water quality objectives for dissolved oxygen and pH in ocean waters, which have been incorporated into Order R9-2006-0054:

1) <u>Dissolved Oxygen.</u> The dissolved oxygen concentration in ocean waters shall not at any time be depressed more than 10 percent from that which

occurs naturally, as a result of the discharge of oxygen demanding waste materials.

2) pH. The pH of receiving waters shall not be changed at any time more than 0.2 pH units from that which occurs naturally.

b. Ocean Plan

Order No. R9-2006-0054 has been written using the guidance of the Ocean Plan, which was most recently updated in 2001 and amended in April 2005, during the term of Order No. 2000-13.

For all ocean waters of the State, the Ocean Plan establishes the beneficial uses described previously in this Fact Sheet. The Ocean Plan also includes water quality objectives for the ocean receiving water for bacterial characteristics, physical characteristics, chemical characteristics, biological characteristics, and radioactivity. A water quality objective for acute toxicity was added to the 2005 California Ocean Plan while the acute toxicity technology-based effluent limitation contained in the 1997 Ocean Plan was eliminated. Water quality objectives from the 1997 Ocean Plan were included as receiving water limitations in Order No. 2000-13 and water quality objectives from the 2005 California Ocean Plan are similarly included as receiving water limitations in Order No. R9-2006-0054.

Table B of the Ocean Plan includes the following water quality objectives for toxic pollutants and whole effluent toxicity:

1) 6-month median, daily maximum, and instantaneous maximum objectives for 21 chemicals and chemical characteristics, including total residual chlorine and chronic toxicity, for the protection of marine aquatic life.

2) 30-day average objectives for 20 non-carcinogenic chemicals for the protection of human health.

3) 30-day average objectives for 42 carcinogenic chemicals for the protection of human health.

4) Daily maximum objectives for acute and chronic toxicity.

3. Expression of WQBELS

NPDES regulations at 40 CFR 122.45(d) require that all effluent limitations for POTWs be expressed, unless impracticable, as both average monthly and average weekly effluent limitations (AMEL and AWEL). This Order contains WQBELs that are based on water quality objectives contained in the 2005 California Ocean Plan and approved by USEPA, that are expressed as 6-month median, maximum daily, and instantaneous maximum water quality objectives for a given constituent; the

implementation provision of the Ocean Plan provides procedures for developing 6-month median, maximum daily, and instantaneous maximum effluent limitation from the water quality objectives. The Ocean Plan does not provide procedures for deriving monthly and weekly-average effluent limitations from the water quality objectives, and other technically- and statistically-sound procedures are not available for deriving statistically-equivalent monthly-average and weekly-average effluent limitations from the Ocean Plan objectives that would satisfy the 6-month median, maximum daily, and instantaneous maximum objectives simultaneously. Consequently, this Order does not express effluent limitations in terms of only monthly and weekly averages but contains effluent limitations derived directly from the water quality objectives according to the implementation procedures of the Ocean Plan. Performance goals, discussed in more detail in Fact Sheet Section IV.C and IV.E, are expressed in a similar manner as WQBELs as described above. For similar reasons, effluent limitations and performance goals for constituents with water quality objectives expressed as a 30-day average only or as a maximum daily only are only provided as an average monthly effluent limitation or as a maximum daily effluent limitation, respectively, and not as monthly and weekly average limitations.

The USEPA's *Technical Support Document for Water Quality-based Toxics Control* (TSD; EPA/505/2-90-001, 1991) provides supporting rationale for shorter term effluent limitations such as maximum daily and instantaneous maximum WQBELS. In the TSD, USEPA recommends the use of maximum daily effluent limitations in lieu of AWELs for two reasons: 1) the AWEL is based on secondary treatment standards for POTWs and is not related to assuring achievement of water quality standards, and 2) weekly averages could average out peak toxic concentrations and therefore the effluent's potential for causing acute toxic effects would be missed. The TSD states that a maximum daily limitation would be toxicologically protective of potential acute toxicity impacts.

The MRP for this Order requires the effluent to be monitored for toxic constituents and parameters using a 24-hour composite sample or a grab sample, but not both. As explained in Section VII, Compliance Determination, of this Order, compliance with maximum daily limitations is determined only with composite samples while compliance with instantaneous maximum limitations is determined only with grab samples, in accordance with the Ocean Plan implementation provisions. This means, for example, if a constituent is required to be monitored with a composite sample, then the monitoring result can only be compared to the maximum daily and 6-month median effluent limitations but not the instantaneous maximum limitation.

4. Determining the Need for WQBELs

Order No. 2000-13 contained effluent limitations for non-conventional and toxic pollutant parameters in Table B of the Ocean Plan. For Order No. R9-2006-0054, the need for effluent limitations based on water quality objectives in Table B of the Ocean Plan was re-evaluated in accordance with 40 CFR 122.44(d) and guidance

for statistically determining the "reasonable potential" for a discharged pollutant to exceed an objective, as outlined in the TSD and the California Ocean Plan Reasonable Potential Analysis (RPA) Amendment that was adopted by the State Water Board on April 21, 2005. The statistical approach combines knowledge of effluent variability (as estimated by a coefficient of variation) with the uncertainty due to a limited number of effluent data to estimate a maximum effluent value at a high level of confidence. This estimated maximum effluent value is based on a lognormal distribution of daily effluent values. Projected receiving water values (based on the estimated maximum effluent value or the reported maximum effluent value and minimum probable initial dilution) can then be compared to the appropriate objective to determine the potential for an exceedance of that objective and the need for an effluent limitation. According to the Ocean Plan amendment, the RPA can yield three endpoints: 1) Endpoint 1, an effluent limitation is required and monitoring is required; 2) Endpoint 2, an effluent limitation is not required and the Regional Water Board may require monitoring; and 3) Endpoint 3, the RPA is inconclusive, monitoring is required, and an existing effluent limitation may be retained or a permit reopener clause is included to allow inclusion of an effluent limitation if future monitoring warrants the inclusion. Endpoint 3 is typically the result when there are fewer than 16 data points and all are censored data (i.e., below quantitation or method detection levels for an analytical procedure).

The RPcalc 2.0 software tool developed by the State Water Board was used for conducting a RPA. A 95% confidence level and 95th percentile was assumed. Effluent data provided in the Discharger's monitoring reports from January 2000 to November 2005 were used as the basis for the RPA. No background data for the constituents were available for use in the RPA; the background concentrations were assumed to equal zero for all pollutants except for those contained in the Ocean Plan Table B implementing procedures for arsenic, copper, mercury, silver, and zinc. As described in Section II.B of this fact sheet, for Order No. 2000-13 SOCWA determined the minimum initial dilution for the Ocean Outfall, using the computer model Visual Plumes, to be 100. The Visual Plumes initial dilution factor was based on 30.00 MGD of secondary effluent and 1.05 MGD of brine wastes. Although the Regional Water Board considered reevaluation of the initial dilution factors for reissuance of this permit, inadequate ambient and effluent salinity data were available to provide accurate results. Therefore, the initial dilution of 100 was used for the RPA and calculating effluent limitations for this permit, and monitoring requirements are included to ensure adequate salinity data is available for reevaluation of the initial dilution when the permit is reissued again. Retaining the initial dilution of 100 for use in this permit is considered to be reasonable due the fact that the reported monthly average flows through the Ocean Outfall ranged from 17.4 MGD to 26.9 MGD from the years 2000 through 2005. Conventional pollutants were not a part of the RPA and are included in this Order as described in Section B.2 above. Additional details of the RPA performed are provided in the Regional Water Board records.

Based on the RPA, the Regional Water Board has determined that effluent limitations were required for TCDD equivalents. The RPA for several pollutants (arsenic, copper, nickel, zinc, total chlorine residual, ammonia, and acute toxicity) resulted in Endpoint 2, and, therefore, do not require effluent limitations. For the remaining Table B pollutants, the RPA was inconclusive (Endpoint 3) primarily due to insufficient data points and the fact that most data points were reported below detection levels. Effluent limitations were not retained or included for these constituents. This Order includes desirable maximum effluent concentrations, referred to in this Order as "performance goals", for constituents that do not have reasonable potential (Endpoint 2) or had inconclusive RPA results (Endpoint 3). Performance goals were derived using the WQBEL calculation procedures described in Section IV.C.5 below. Performance goals are discussed further in Section IV.E below.

Tables 16, 17, and 18 of this Fact Sheet lists the effluent limitations and performance goals for all constituents and their corresponding RPA results. The MRP for this Order requires monitoring for constituents with RPA Endpoints 1 for compliance determination and future RPA. The MRP also requires monitoring for constituents with RPA Endpoints 2 or 3 to obtain effluent data that would allow determination of reasonable potential for these constituents in future permit renewals and/or updates.

Conventional and certain non-conventional pollutants (i.e., BOD_5 or $CBOD_5$, TSS, pH, Oil and Grease, settleable solids, and turbidity) were not a part of the reasonable potential analysis, and technology-based effluent limitations for these conventional pollutants are included in this Order as described in Section IV.B.2 of this Fact Sheet. As discussed above, reasonable potential analysis determines the need to include water-quality based effluent limitations that are in addition to technology-based effluent limitations. Effluent limitations for conventional pollutants are required as technology-based standards, and reasonable potential analysis is not necessary to determine if these effluent limitations are required.

5. WQBEL and Performance Goal Calculations

From the Table B water quality objectives of the Ocean Plan, effluent limitations are calculated according to the following equation for all pollutants, and performance goals are similarly calculated, except for acute toxicity (if applicable) and radioactivity:

$Ce = Co + Dm (Co – Cs)$ where,
Ce = the effluent limitation (µg/L)
Co = the water quality objective to be met at the completion of initial dilution (µg/L)
Cs = background seawater concentration
Dm = minimum probable initial dilution expressed as parts seawater per part wastewater

The performance goal for acute toxicity is calculated according to the following equation:

$Ce = Co + (0.1)\ Dm\ (Co - Cs)$

where all variables are as indicated above. This equation applies only when Dm > 24.

The Dm is based on observed waste flow characteristics, receiving water density structure, and the assumption that no currents of sufficient strength to influence the initial dilution process flow across the discharge structure. As discussed in Section IV.C.4 above, the minimum initial dilution of 100:1 from the previous Order No. 2000-13, was used for the initial dilution factor, Dm, for the Ocean Outfall.

Initial dilution is the process that results in the rapid and irreversible turbulent mixing of wastewater with ocean water around the point of discharge. For a submerged buoyant discharge, characteristic of most municipal and industrial wastes that are released from the submarine outfalls, the momentum of the discharge and its initial buoyancy act together to produce turbulent mixing. Initial dilution in this case is completed when the diluting wastewater ceases to rise in the water column and first begins to spread horizontally.

As site-specific water quality data is not available, in accordance with Table B implementing procedures, Cs equals zero for all pollutants, except the following:

Table 11. Pollutants Having Background Concentrations

Pollutant	Background Seawater Concentration
Arsenic	3 µg/L
Copper	2 µg/L
Mercury	0.0005 µg/L
Silver	0.16 µg/L
Zinc	8 µg/L

The WQBELs for TCDD equivalents are determined as follows:

Water quality objectives from the Ocean Plan are:

Table 12. TCDD Equivalents Ocean Plan Objectives

Pollutant	6-Month Median	Daily Maximum	Instantaneous Maximum	30 Day Avg
TCDD Equivalents (µg/L)	--	--	--	3.9×10^{-9}

Using the equation, $Ce = Co + Dm\ (Co - Cs)$, effluent limitations are calculated as follows before rounding to two significant digits.

$$Ce = (3.9 \times 10^{-9}) + 100\ [(3.9 \times 10^{-9}) - 0] = 3.94 \times 10^{-7}\ \mu g/L\ (30\ Day\ Avg)$$

Due to the fact that the same initial dilution that was used in the previous order is used, and the water quality objectives for TCDD equivalents have not changed, the concentration-based effluent limitations that are included in Order R9-2006-0054 are the same those contained in Order No. 2000-13.

Based on the RPA, except for TCDD equivalents, the WQBELs established by Order No. 2000-13 are not retained in Order R9-2006-0054. For those pollutants previously limited, non-enforceable performance goals are established in Order R9-2006-0054 using the same equation and methodology described above for TCDD equivalents. Several other constituents were affected by the difference in water quality objectives contained in the 1997 Ocean Plan and those contained in the 2005 California Ocean Plan. The specific differences between the water quality objectives and how they are addressed in Order R9-2006-0054 are described below:

a. The 1997 Ocean Plan did not include water quality objectives for four toxic pollutants, which are included in the Ocean Plan (2005) – chlorodibromomethane, dichlorobromomethane, N-nitrosodi-N-propylamine, and heptachlor epoxide; and therefore, effluent limitations for these pollutants were not established by Order No. 2000-13 and monitoring data was not available for these pollutants. Based on methods contained in the Ocean Plan (2005) and an initial dilution factor of 100, the following performance goals are included in Order No. R9-2006-0054.

Table 13. New Toxic Pollutants and Corresponding Performance Goals Based on the 2005 California Ocean Plan

Pollutant	Units	Monthly Average
Chlorodibromomethane	µg/L	868.6
Dichlorobromomethane	µg/L	626.2
N-nitrosodi-N-propylamine	µg/L	38.38
Heptachlor Epoxide	µg/L	0.002

b. For eight toxic pollutants, water quality objectives are more stringent in the 2005 California Ocean Plan than in the 1997 Ocean Plan. The following table contains performance goals for these eight pollutants, which are based on methods and water quality objectives contained in the 2005 California Ocean Plan. These performance goals are included in Order No. R9-2006-0054.

Table 14. Toxic Pollutant Effluent Limitations or Performance Goals Based on the 2005 California Ocean Plan

Pollutant	Units	Performance Goal Monthly Average
1,1-Dichloroethylene	µg/L	90.9
Isophorone	µg/L	73,730.0
Tetrachloroethylene	µg/L	202.0
Thallium	µg/L	202.0
1,1,2,2-Tetrachloroethane	µg/L	232.3

Pollutant	Units	Performance Goal Monthly Average
1,1,2-Trichloroethane	µg/L	949.4
1,2-Dichloroethane	µg/L	2,828.0
Heptachlor	µg/L	0.005

c. Table B of the Ocean Plan includes objectives for chlorinated and non-chlorinated phenolic compounds but does not define the individual chemical constituents comprising each group. In this Order, chlorinated phenolics are defined as the sum of 2-chlorophenol, 2,4-dichlorophenol, 3-methyl-4-chlorophenol, and pentachlorophenol; non-chlorinated phenolics are defined as the sum of 2-nitrophenol, 4-nitrophenol, and phenol.

6. Mass and Concentration Limits

40 CFR 122.45(f)(1)(ii) states that all permit limitations, standards or prohibitions shall be expressed in terms of mass except under certain circumstances including "when applicable standards and limitations are expressed in terms of other units of measurement." This provision originates from regulations adopted by USEPA on June 7, 1979 as 40 CFR 122.15 (d) which required effluent limitations in terms of mass except under certain circumstances including "where applicable promulgated effluent guideline limitations, standards or prohibitions are expressed in other terms than mass, e.g., as concentration levels." The 1979 provision indicated that concentration was clearly one of the "other terms than mass" and that the provision was limited to technology-based effluent limitations.

The 1979 provision underwent several modifications but achieved the language of the current 40 CFR 122.45 in revised rules promulgated by USEPA on May 19, 1980. The Federal Register Preamble for the revised rule promulgation (45 FR 33342) states "[the revised regulation] now provides permit issuers greater flexibility in using concentration limitations. Whenever appropriate, permits may include a concentration limit in addition to a mass limitation. Limitations expressed exclusively in terms other than mass may be used (1) when applicable effluent guideline limitations are expressed other than in mass; (2) when on a case-by-case basis the mass of the discharge cannot be related to production or other measures of operation, and dilution will not be used as a substitute for treatment; or (3) for pH or other pollutants which cannot appropriately be expressed as mass. For example, total suspended solids discharges from certain mining operations may be unrelated to measures of operation. Finally, a permit can always contain a non-mass limit in addition to a mass limitation, and the permittee must comply with both."

In the case of secondary treatment standards which are expressed as BOD_5 (or $CBOD_5$) and TSS concentrations and technology-based concentration effluent standards for oil and grease under Table A of the Ocean Plan, the need for mass emission rate (MER) limitations that are directly related to protection of ocean waters or proper operation has not been determined. Consequently, MER effluent limitations

for $CBOD_5$, TSS and oil and grease have not been included in this Order; however, if information demonstrating a need for these limitations becomes available in the future, they may be reinstated in this Order.

For effluent limitations and performance goals based on water quality objectives, MER limitations are retained in the revised tentative Order. This is appropriate because the Ocean Plan's Implementation Provisions for Table B require that "[d]ischarge requirements shall also specify effluent limitations in terms of mass emission rate limits using the general formula: Equation 3: lbs/day = 0.00834 x Ce x Q . . . ." The Ocean Plan clearly intended to also limit the discharge of toxic pollutants on a mass-loading basis.

No differentiation is made between discharges during dry-weather and wet-weather periods. To avoid apparent violations of MER effluent limitations when flows to the SOCWA collection system increase during wet weather and sample concentrations are either non-detect (ND) or "detected, not quantified" (DNQ), Provision VII.G of this Order requires that corresponding calculated MERs also be reported as either ND or DNQ, as appropriate.

In the previous Order, a flow of 30.0 MGD was used as the basis for calculating MERs. Consistent with the requirements at 40 CFR 122.45(b), MERs will be based on a total flow of 36.835 MGD. This flow represents a combination of the design flows for POTWs (34.98 MGD), the estimated flow for the City of San Juan Capistrano RO Water Treatment Plant (estimated as 0.73 MGD), the estimated flow for discharges from the Segunda Deshecha (M02) Flood Control Channel (1 MGD), and the estimated flow from the South Coast Water District GRF (0.125 MGD).

7. Whole Effluent Toxicity (WET)

Implementing provisions at Section III.C of the Ocean Plan require that Dischargers shall conduct chronic toxicity testing for ocean waste discharges with minimum initial dilution factors ranging from 100:1 to 350:1, and provide that Regional Water Boards may require that acute toxicity testing be conducted in addition to chronic as necessary for the protection of beneficial uses of ocean waters.

The effluent limitation for chronic toxicity contained in Order No. 2000-13 is retained in this Order although the RPA for chronic toxicity indicated Endpoint 2. The effluent limitation is retained because the RPA for most Ocean Plan Table B toxic pollutants indicated a result of Endpoint 2 or 3, and effluent limitations for these pollutants were not retained. The chronic toxicity effluent limitation is retained to protect water quality from the combination of effluents that may contain several constituents whose toxic effects are additive, synergistic, or antagonistic, although each constituent may not be present in amounts that would be toxic by itself. Based on the effluent limitation for chronic toxicity contained in Order No. 2000-13 and the requirements in the Ocean Plan, a maximum daily effluent limitation of 101 TU_c for chronic toxicity is included in Order No. R9-2006-0054.

The technology-based acute toxicity effluent limitation contained in Order No. 2000-13, as required under the 1997 Ocean Plan, is not retained in Order No. R9-2006-0054. The 2005 California Ocean Plan eliminated the technology-based acute toxicity effluent limitation of the 1997 Ocean Plan and instead includes an acute toxicity water quality objective in Table B. Only a performance goal for acute toxicity is included in this Order based on a reasonable potential analysis result of Endpoint 2 based on the acute toxicity water quality objective.

A toxicity reduction evaluation (TRE) is a site-specific study conducted in a stepwise process designed to identify the causative agent(s) of effluent toxicity, isolate the sources of toxicity, evaluate the effectiveness of toxicity control options, and then confirm the reduction in effluent toxicity. Order No. R9-2006-0054 requires the Discharger to perform a TRE if the Executive Officer determines that toxicity testing shows consistent violation or exceedance of any acute or chronic toxicity limitation or performance goal.

5. Radioactivity

Table B of the Ocean Plan includes an objective for radioactivity which references limitations specified in Title 17, Division 1, Chapter 5, Subchapter 4, Group 3, Section 30253 of the CCR. The Ocean Plan also states that these objectives shall apply directly to the undiluted waste effluent. Title 17 CCR does not actually contain limitations but instead references Title 10, Part 20 of the CFR which contains effluent limitations for the discharge of radioactive nuclides in aqueous effluent under Column 2 of its Appendix B, Table 2. Incorporation of those limitations in the Ocean Plan is prospective. The Ocean Plan's radioactivity objective holds all discharges of effluent that could potentially have radioactive materials to the same standards as effluents from facilities that would require a license under Title 17 CCR and Title 10 CFR regulations. It is appropriate to hold effluent from POTWs to the same standards because 10 CFR regulations do allow licensed facilities to dispose of radioactive materials to sanitary sewer systems. Effluent limitations for several important radionuclides taken from Appendix B, Table 2, 10 CFR 20 are provided below.

Table 15. Selected Radioactivity Effluent Limitations (from Table 2, Appendix B, Title 10 CFR Part 20)

Constituent	Units	Daily Maximum
Radium-226	pCi/ L	60
Radium-228	pCi/ L	60
Strontium-90	pCi/ L	500
Tritium	pCi/ L	1,000,000
Uranium	pCi/ L	300

D. Final Effluent Limitations

The following tables list the effluent limitations established by Order No. R9-2006-0054. Where Order No. R9-2006-0054 establishes water quality-based mass emission limitations, a flow of 36.385 MGD (representing the combined design flows from all existing contributions to the Ocean Outfall) and a minimum probable initial dilution factor of 100:1was used.

Table 16a. Effluent Limitations based on Secondary Treatment Standards and Table A of the 2005 California Ocean Plan (SOCWA J.B. Latham TP, SMWD Chiquita WRP, MNWD 3A RP, and City of San Clemente RP)

Constituent	Units	Effluent Limitations					
		Max Daily	Average Monthly	Average Weekly	Instantaneous		6 Month Median
					Min	Max	
CBOD 5-day 20°C	mg/L		25	40			
	%	The average monthly percent removal shall not be less than 85 percent.					
Total Suspended Solids	mg/L		30	45			
	%	The average monthly percent removal shall not be less than 85 percent.					
pH	Standard units				6.0	9.0	
Oil and Grease	mg/L		25	40		75	
Settleable Solids	ml/L		1.0	1.5		3.0	
Turbidity	NTU		75	100		225	

Table 16b. Effluent Limitations based on Table A Technology-Based Standards of the 2005 California Ocean Plan (Segunda Deshecha (M02) Flood Control Channel)

Constituent	Units	Effluent Limitations					
		Max Daily	Average Monthly	Average Weekly	Instantaneous		6 Month Median
					Min	Max	
Total Suspended Solids	mg/L		60				
pH	Standard units				6.0	9.0	
Oil and Grease	mg/L		25	40		75	
Settleable Solids	ml/L		1.0	1.5		3.0	
Turbidity	NTU		75	100		225	

Table 16c. Effluent Limitations based on Table A Technology-Based Standards of the 2005 California Ocean Plan (City of San Juan RO Water Treatment Plant)

Constituent	Units	Effluent Limitations					
		Max Daily	Average Monthly	Average Weekly	Instantaneous		6 Month Median
					Min	Max	
Total Suspended Solids	mg/L		60				
pH	Standard units				6.0	9.0	
Oil and Grease	mg/L		25	40		75	

Constituent	Units	Effluent Limitations					
		Max Daily	Average Monthly	Average Weekly	Instantaneous		6 Month Median
					Min	Max	
Settleable Solids	ml/L		1.0	1.5		3.0	
Turbidity	NTU		75	100		225	

Table 16d. Effluent Limitations based on Table A Technology-Based Standards of the 2005 California Ocean Plan (South Coast Water District GRF)

Constituent	Units	Effluent Limitations					
		Max Daily	Average Monthly	Average Weekly	Instantaneous		6 Month Median
					Min	Max	
Total Suspended Solids	mg/L		60				
	lbs/day					52	
pH	Standard units				6.0	9.0	
Oil and Grease	mg/L		25	40		75	
	lbs/day		26	42		78	
Settleable Solids	ml/L		1.0	1.5		3.0	
Turbidity	NTU		75	100		225	

Table 17. Effluent Limitations based on 2005 California Ocean Plan

Constituent	RPA End Point	Units	Effluent Limitations					
			Max Daily	Average Monthly	Average Weekly	Instantaneous		6 Month Median
						Min	Max	
Chronic Toxicity [4]	2	TU_c	101					
TCDD Equivalents	1	µgL		3.94E-07				
		lbs/day		1.21E-07				

Note: In scientific "E" notation, the number following the "E" indicates the position of the decimal point in the value. Negative numbers after the "E" indicate that the value is less than 1, and positive numbers after the "E" indicate that the value is greater than 1. In this notation a value of 6.1 E–02 represents a value of
6.1×10^{-2} or 0.061, 6.1E+2 represents 6.1×10^{2} or 610, and 6.1E+0 represents 6.1×10^{0} or 6.1.

E. Performance Goals

Performance goals serve to maintain existing treatment levels and effluent quality and supports State and federal antidegradation policies. Additionally, performance goals provide all interested parties with information regarding the expected levels of pollutants in the discharge that should not be exceeded in order to maintain the water quality objectives established in the Ocean Plan. Performance goals are not limitations or standards for the regulation of the discharge. Effluent concentrations above the performance goals will not be considered as violations of the permit but serve as red flags that indicate water quality concerns. Repeated red flags may prompt the Regional Water Board to reopen and amend the permit to replace performance goals for constituents of concern with effluent limitations, or the Regional Water Board may coordinate such actions with the next permit renewal.

Constituents that do not have reasonable potential are listed as performance goals in this Order. The following table lists the performance goals established by Order No. R9-2006-0054. These constituents shall be monitored at M-001, but the results will be used for informational purposes only, not compliance determination.

Table 18. Performance Goals based on 2005 California Ocean Plan

Constituent	RPA End Point	Units	Performance Goals					
			Max Daily	Average Monthly	Average Weekly	Instantaneous		6 Month Median
						Min	Max	
Arsenic	2	ug/L	2.93E+03				7.78E+03	5.08E+02
		lbs/day	9.01E+02				2.39E+03	1.56E+02
Cadmium	3	ug/L	4.04E+02				1.01E+03	1.01E+02
		lbs/day	1.24E+02				3.10E+02	3.10E+01
Chromium VI	3	ug/L	8.08E+02				2.02E+03	2.02E+02
		lbs/day	2.48E+02				6.21E+02	6.21E+01
Copper	2	ug/L	1.01E+03				2.83E+03	1.03E+02
		lbs/day	3.11E+02				8.69E+02	3.16E+01
Lead	3	ug/L	8.08E+02				2.02E+03	2.02E+02
		lbs/day	2.48E+02				6.21E+02	6.21E+01
Mercury	3	ug/L	1.61E+01				4.04E+01	3.99E+00
		lbs/day	4.95E+00				1.24E+01	1.23E+00
Nickel	2	ug/L	2.02E+03				5.05E+03	5.05E+02
		lbs/day	6.21E+02				1.55E+03	1.55E+02
Selenium	3	ug/L	6.06E+03				1.52E+04	1.52E+03
		lbs/day	1.86E+03				4.65E+03	4.65E+02
Silver	3	ug/L	2.67E+02				6.91E+02	5.47E+01
		lbs/day	8.20E+01				2.12E+02	1.68E+01
Zinc	2	ug/L	7.28E+03				1.94E+04	1.22E+03
		lbs/day	2.24E+03				5.96E+03	3.75E+02
Cyanide	2	ug/L	4.04E+02				1.01E+03	1.01E+02
		lbs/day	1.24E+02				3.10E+02	3.10E+01

Constituent	RPA End Point	Units	Performance Goals					
			Max Daily	Average Monthly	Average Weekly	Instantaneous		6 Month Median
						Min	Max	
Total Chlorine Residual	2	ug/L	8.08E+02				6.06E+03	2.02E+02
		lbs/day	2.48E+02				1.86E+03	6.21E+01
Ammonia (expressed as nitrogen)	2	ug/L	2.42E+05				6.06E+05	6.06E+04
		lbs/day	7.45E+04				1.86E+05	1.86E+04
Acute Toxicity	2	TUa	3.30E+00				NA	NA
Phenolic Compounds (non-chlorinated)	3	ug/L	1.21E+04				3.03E+04	3.03E+03
		lbs/day	3.72E+03				9.31E+03	9.31E+02
Phenolic Compounds (chlorinated)	3	ug/L	4.04E+02				1.01E+03	1.01E+02
		lbs/day	1.24E+02				3.10E+02	3.10E+01
Endosulfan	3	ug/L	1.82E+00				2.73E+00	9.09E-01
		lbs/day	5.58E-01				8.38E-01	2.79E-01
Endrin	3	ug/L	4.04E-01				6.06E-01	2.02E-01
		lbs/day	1.24E-01				1.86E-01	6.21E-02
HCH	3	ug/L	8.08E-01				1.21E+00	4.04E-01
		lbs/day	2.48E-01				3.72E-01	1.24E-01
Radioactivity	Not to exceed limits specified in Title 17, Division 1, Chapter 5, Subchapter 4, Group 3, Article 3, Section 30253 of the California Code of Regulations. Reference to Section 30253 is prospective, including future changes to any incorporated provisions of federal law, as the changes take effect.							
Acrolein	3	ug/L		2.22E+04				
		lbs/day		6.83E+03				
Antimony	3	ug/L		1.21E+05				
		lbs/day		3.72E+04				
Bis (2-chloroethoxy) Methane	3	ug/L		4.44E+02				
		lbs/day		1.37E+02				

Constituent	RPA End Point	Units	Performance Goals					
			Max Daily	Average Monthly	Average Weekly	Instantaneous		6 Month Median
						Min	Max	
Bis (2-chloroisopropyl) Ether	3	ug/L		1.21E+05				
		lbs/day		3.72E+04				
Chlorobenzene	3	ug/L		5.76E+04				
		lbs/day		1.77E+04				
Chromium (III)	3	ug/L		1.92E+07				
		lbs/day		5.90E+06				
Di-n-butyl Phthalate	3	ug/L		3.54E+05				
		lbs/day		1.09E+05				
Dichlorobenzenes	3	ug/L		5.15E+05				
		lbs/day		1.58E+05				
Diethyl Phthalate	3	ug/L		3.33E+06				
		lbs/day		1.02E+06				
Dimethyl Phthalate	3	ug/L		8.28E+07				
		lbs/day		2.54E+07				
4,6-Dinitro-2-Methylphenol	3	ug/L		2.22E+04				
		lbs/day		6.83E+03				
2,4-Dinitrophenol	3	ug/L		4.04E+03				
		lbs/day		1.24E+03				
Ethylbenzene	3	ug/L		4.14E+05				
		lbs/day		1.27E+05				
Fluoranthene	3	ug/L		1.52E+03				
		lbs/day		4.65E+02				
Hexachlorocyclo-pentadiene	3	ug/L		5.86E+03				
		lbs/day		1.80E+03				
Nitrobenzene	3	ug/L		4.95E+02				
		lbs/day		1.52E+02				

Constituent	RPA End Point	Units	Performance Goals					
			Max Daily	Average Monthly	Average Weekly	Instantaneous		6 Month Median
						Min	Max	
Thallium	3	ug/L		2.02E+02				
		lbs/day		6.21E+01				
Toluene	3	ug/L		8.59E+06				
		lbs/day		2.64E+06				
Tributyltin	3	ug/L		1.41E-01				
		lbs/day		4.34E-02				
1,1,1-Trichloroethane	3	ug/L		5.45E+07				
		lbs/day		1.68E+07				
Acrylonitrile	3	ug/L		1.01E+01				
		lbs/day		3.10E+00				
Aldrin	3	ug/L		2.22E-03				
		lbs/day		6.83E-04				
Benzene	3	ug/L		5.96E+02				
		lbs/day		1.83E+02				
Benzidine	3	ug/L		6.97E-03				
		lbs/day		2.14E-03				
Beryllium	3	ug/L		3.33E+00				
		lbs/day		1.02E+00				
Bis (2-chloroethyl) Ether	3	ug/L		4.55E+00				
		lbs/day		1.40E+00				
Bis (2-ethlyhexyl) Phthalate	3	ug/L		3.54E+02				
		lbs/day		1.09E+02				
Carbon Tetrachloride	3	ug/L		9.09E+01				
		lbs/day		2.79E+01				
Chlordane	3	ug/L		2.32E-03				
		lbs/day		7.14E-04				

Constituent	RPA End Point	Units	Performance Goals					
			Max Daily	Average Monthly	Average Weekly	Instantaneous		6 Month Median
						Min	Max	
Chlorodibromo-methane	3	ug/L		8.69E+02				
		lbs/day		2.67E+02				
Chloroform	3	ug/L		1.31E+04				
		lbs/day		4.03E+03				
DDT	3	ug/L		1.72E-02				
		lbs/day		5.27E-03				
1,4-Dichlorobenzene	3	ug/L		1.82E+03				
		lbs/day		5.58E+02				
3,3'-Dichlorobenzidine	3	ug/L		8.18E-01				
		lbs/day		2.51E-01				
1,2-Dichloroethane	3	ug/L		2.83E+03				
		lbs/day		8.69E+02				
1,1-Dichloroethylene	3	ug/L		9.09E+01				
		lbs/day		2.79E+01				
Dichlorobromo-methane	3	ug/L		6.26E+02				
		lbs/day		1.92E+02				
Dichloromethane	3	ug/L		4.55E+04				
		lbs/day		1.40E+04				
1,3-Dichloropropene	3	ug/L		8.99E+02				
		lbs/day		2.76E+02				
Dieldrin	3	ug/L		4.04E-03				
		lbs/day		1.24E-03				
2,4-Dinitrotoluene	3	ug/L		2.63E+02				
		lbs/day		8.07E+01				
1,2-Diphenylhydrazine	3	ug/L		1.62E+01				
		lbs/day		4.96E+00				

Constituent	RPA End Point	Units	Performance Goals					
			Max Daily	Average Monthly	Average Weekly	Instantaneous		6 Month Median
						Min	Max	
Halomethanes	3	ug/L		1.31E+04				
		lbs/day		4.03E+03				
Heptachlor	3	ug/L		5.05E-03				
		lbs/day		1.55E-03				
Heptachlor Epoxide	3	ug/L		2.02E-03				
		lbs/day		6.21E-04				
Hexachlorobenzene	3	ug/L		2.12E-02				
		lbs/day		6.52E-03				
Hexachlorobutadiene	3	ug/L		1.41E+03				
		lbs/day		4.34E+02				
Hexachloroethane	3	ug/L		2.53E+02				
		lbs/day		7.76E+01				
Isophorone	3	ug/L		7.37E+04				
		lbs/day		2.27E+04				
N-Nitroso-dimethylamine	3	ug/L		7.37E+02				
		lbs/day		2.27E+02				
N-Nitrosodi-N-propylamine	3	ug/L		3.84E+01				
		lbs/day		1.18E+01				
N-Nitrosodiphenyl-amine	3	ug/L		2.53E+02				
		lbs/day		7.76E+01				
PAHs	3	ug/L		8.89E-01				
		lbs/day		2.73E-01				
PCBs	3	ug/L		1.92E-03				
		lbs/day		5.90E-04				
1,1,2,2-Tetrachloroethane	3	ug/L		2.32E+02				
		lbs/day		7.14E+01				

Constituent	RPA End Point	Units	Performance Goals					
			Max Daily	Average Monthly	Average Weekly	Instantaneous		6 Month Median
						Min	Max	
Tetrachloroethylene	3	ug/L		2.02E+02				
		lbs/day		6.21E+01				
Toxaphene	3	ug/L		2.12E-02				
		lbs/day		6.52E-03				
Trichloroethylene	3	ug/L		2.73E+03				
		lbs/day		8.38E+02				
1,1,2-Trichloroethane	3	ug/L		9.49E+02				
		lbs/day		2.92E+02				
2,4,6-Trichlorophenol	3	ug/L		2.93E+01				
		lbs/day		9.00E+00				
Vinyl Chloride	3	ug/L		3.64E+03				
		lbs/day		1.12E+03				

Note: In scientific "E" notation, the number following the "E" indicates the position of the decimal point in the value. Negative numbers after the "E" indicate that the value is less than 1, and positive numbers after the "E" indicate that the value is greater than 1. In this notation a value of 6.1 E–02 represents a value of
6.1×10^{-2} or 0.061, 6.1E+2 represents 6.1×10^{2} or 610, and 6.1E+0 represents 6.1×10^{0} or 6.1.

F. Antidegradation

Waste Discharge Requirements for SOCWA's discharge through the Ocean Outfall must conform to federal and state antidegradation policies provided at 40 CFR 131.12 and in State Board Resolution No. 68-16, *Statement of Policy with Respect to Maintaining High Quality of Waters in California*. The antidegradation policies require that beneficial uses and the water quality necessary to maintain those beneficial uses in the receiving waters of the discharge shall be maintained and protected, and, if existing water quality is better than the quality required to maintain beneficial uses, the existing water quality shall be maintained and protected unless allowing a lowering of water quality is necessary to accommodate important economic and social development or consistent with maximum benefit to the people of California. When a significant lowering of water quality is allowed by the Regional Water Board, an antidegradation analysis is required in accordance with the State Water Board's Administrative Procedures Update (July 2, 1990), Antidegradation Policy Implementation for NPDES Permitting.

1. Technology-based Effluent Limitations

The technology-based standards for POTW performance are promulgated at 40 CFR Part 133 and expressed as 30-day averages and 7-day averages for BOD_5, $CBOD_5$ and TSS. In previous NPDES permits for SOCWA, including Order No. 2000-13, these standards were incorporated as "Monthly Average (30-day)" and "Weekly Average (7-day)" effluent limitations for $CBOD_5$ and TSS which were enforced by the Regional Water Board as running averages. To comply with 40 CFR 122.45, which requires that effluent limitations be expressed as average weekly and average monthly limitations for POTWs, the $CBOD_5$ and TSS standards have been revised in this current permit as Average Monthly Effluent Limitations (AMELs) and Average Weekly Effluent Limitations (AWELs) that are numerically equal to the previous effluent limitations. As explained in the Compliance Determination section of this Order, compliance with the AMEL and AWEL will be determined by considering the average of sampling results within a calendar month or calendar week, respectively, rather than as running averages. As also further explained in the Compliance Determination section of this Order, a violation of the AMEL or the AWEL would result in a violation for each day of the calendar month or calendar week, respectively. Consequently, the AMEL and AWEL are expected to provide a similar level of incentive for POTWs to operate treatment facilities to be in compliance at all times as the previous "Monthly Average (30-day)" and "Weekly Average (7-day)" running average effluent limitations. The conversion of the $CBOD_5$ and TSS effluent limitations to AMEL and AWEL are not expected to cause a change in the physical nature of the effluent discharged and are not expected to impact beneficial uses nor cause a reduction of the water quality of the receiving water. For these reasons, the Regional Water Board has determined that an antidegradation analysis is not required to consider the possible impacts resulting from the $CBOD_5$ and TSS AMELs and AWELs.

2. Water Quality-based Effluent Limitations

The WQBELs contained in this Order have been modified from previous NPDES permits for the SOCWA (Order No. 2000-13), due to removal of effluent limitations after a RPA. In accordance with the State Water Board's Administrative Procedures Update, the Regional Water Board assessed the potential impact of the modified effluent limitations on existing water quality and the need for an antidegradation analysis as follows:

a. Removal of effluent limitations after a reasonable potential analysis

Effluent limitations were not included in this Order for constituents for which reasonable potential to exceed the water quality objective was not indicated following a reasonable potential analysis although the previous permit included effluent limitations for those constituents. The procedures for conducting the reasonable potential analysis are explained elsewhere in this Fact Sheet. For constituents for which effluent limitations were not included, non-regulatory performance goals were included which will indicate the level of discharge at

which possible water quality impacts may be significant. The removal of effluent limitations by itself is not expected to cause a change in the physical nature of the effluent discharged and is not expected to impact beneficial uses nor cause a reduction of the water quality of the receiving water. Coupled with the inclusion of performance goals and retention of the monitoring program for constituents without effluent limitations, the existing water quality is expected to be maintained. For these reasons, the Regional Water Board has determined that an antidegradation analysis is not required to consider the possible impacts resulting from the removal of effluent limitations following a reasonable potential analysis.

b. Flowrate Increase

The new total permitted flow rate of 36.835 MGD, is an increase over the previous permitted total flowrate of 30.0 MGD. This increased flowrate is based on the actual design flows of the POTWs contributing to the Ocean Outfall and the expected flows from the City of San Juan Capistrano RO Water Treatment Plant, the Segunda Deshecha (M02) Flood Control Channel, and the South Coast Water District GRF. The flow used in the previous permit was based on the expected flow through the outfall. This increase in flow results in a relaxation of the MER effluent limitations, which may indicate a lowering of water quality. This change to use of the design flow of the POTWs as the basis for calculating the MER is based on the NPDES regulations at 40 CFR 122.45(b).Ocean Outfall

In particular for Order No. R9-2006-0054, the MER effluent limitation for TCDD equivalents will be increased from 9.58×10^{-8} pounds per day (lbs/day) to 1.17×10^{-7} lbs/day. This change results in a 19 percent increase in the MER for TCDD equivalents. It should be noted that the allowable dilution did not change and therefore, the concentration-based effluent limitation for TCDD equivalents (3.94×10^{-7} µg/L as a monthly average) remains the same as that contained in Order 2000-13.

The greater MER is expected to result in a lowering of existing water quality by an increment not greater than approximately 19 percent of the monthly average water quality objective (WQO). This lowering of water quality is not expected to be significant and is not expected to cause adverse effects to the overall receiving water. Furthermore, the increase in mass that the effluent may contain assumes a discharge at the concentration of the effluent limitation (3.94×10^{-7} µg/L), whereas historical effluent data for the discharge through the ACOO indicate that the concentration of TCDD equivalents in the effluent discharged are considerably lower. For these reasons, the Regional Board has determined that an antidegradation analysis is not required to consider the possible impacts resulting from the recalculation of MER effluent limitations and consequent relaxation of effluent limitations.

V. RATIONALE FOR RECEIVING WATER LIMITATIONS

Receiving water limitations contained in Order No. R9-2006-0054 are derived from the water quality objectives for ocean waters established by the Basin Plan (1994) and the Ocean Plan (2005).

VI. RATIONALE FOR MONITORING AND REPORTING REQUIREMENTS

Section 122.48 of 40 CFR requires all NPDES permits to specify recording and reporting of monitoring results. Sections 13267 and 13383 of the CWC authorize the Regional Water Boards to require technical and monitoring reports. The Monitoring and Reporting Program, Attachment E of this Order, establishes monitoring and reporting requirements to implement federal and state requirements. The following provides the rationale for the monitoring and reporting requirements contained in the Monitoring and Reporting Program for this Facility.

A. Influent Monitoring

Influent monitoring in Order No. R9-2006-0054 is required at each of the municipal wastewater treatment plants that contribute to the Ocean Outfall, including the SOCWA Jay B. Latham RTP, the SMWD Chiquita WRP, the MNWD 3A RP, and the City of San Clemente RP. Monitoring the influent is necessary for determining compliance with the secondary treatment percent removal requirements.

The influent monitoring requirements, with frequencies consistent with those contained in Order No. 2000-13, are summarized in the following table.

Table 19. Influent Monitoring Requirements

Constituent	Units	Sample Type	Sampling Frequency
Flow	MGD	Recorder / Totalizer	Continuous
$CBOD_5$ @ 20º C	mg/L	24 Hr Composite	Weekly
BOD_5 @ 20º C	mg/L	24 Hr Composite	Monthly
TSS	mg/L	24 Hr Composite	Weekly

Influent monitoring for $CBOD_5$ and TSS allows determination of removal efficiencies, which are required by Order No. R9-2006-0054. Sampling for BOD_5 is required to monitor the non-carbonaceous oxygen demand of the effluent from the wastewater treatment plants.

B. Effluent Monitoring

In an effort to standardize monitoring and reporting requirements and in order to support electronic data submittal of Discharger Self-Monitoring Reports, reporting units, definitions, and deadlines specified in the MRP for Order No. R9-2006-0054 have been written in

accordance with the State Water Resource Control Board's Water Quality Permit Standards Team Final Report.

Effluent monitoring has been required for each of the wastewater treatment plants prior to discharge into the Ocean Outfall collection system to determine compliance with the applicable technology-based effluent limitations, including the percent removal requirements for POTWs. Effluent monitoring to determine compliance with WQBELs is required at a location where representative samples of commingled effluent from all contributors to the Ocean Outfall can be taken (the sampling vault in the Dohenny State Beach Park through a sampling port in the outfall pipe). As noted during the recent compliance evaluation inspection at SOCWA, the use of an ISCO sampler to pump effluent (through plastic tubing) to a sample vessel may not be appropriate for certain volatile organics, and SOCWA will be required to develop and implement procedures to ensure the integrity of final effluent samples.

All effluent monitoring frequencies from Order No. 2000-13 are retained by MRP No. R9-2006-0054. Effluent monitoring requirements of MRP No. R9-2006-0054 (Attachment E) should be consulted for greater detail regarding specific monitoring requirements.

C. Whole Effluent Toxicity Testing Requirements

The Discharger shall conduct acute and chronic toxicity testing on 24-hour composite effluent samples collected at Effluent Monitoring Station M-001, as defined in Section II of the MRP (Attachment E). Due to the nature of the variety of discharges that are combined prior to discharge through the Ocean Outfall, acute and chronic toxicity are required to be monitored monthly, consistent with the requirements in the existing permit.

Acute toxicity testing shall be performed using either a marine fish or invertebrate species in accordance with procedures established by the USEPA guidance manual, *Methods for Measuring the Acute Toxicity of Effluents and Receiving Waters to Freshwater and Marine Organisms*, 5th Edition, October 2002 (EPA-821-R-02-012).

Critical life stage toxicity tests shall be performed to measure chronic toxicity (TU_c). Testing shall be performed using methods outlined in *Short-Term Methods for Estimating the Chronic Toxicity of Effluents and Receiving Waters to West Coast Marine and Estuarine Organisms* (Chapman, G.A., D.L. Denton, and J.M. Lazorchak, 1995) or *Procedures Manual for Conducting Toxicity Tests Developed by the Marine Bioassay Project* (SWRCB, 1996).

A screening period for chronic toxicity shall be conducted every other year for 3 months, using a minimum of three test species with approved test protocols(from the Ocean Plan). Other tests may be used, if they have been approved for such testing by the State Water Board. The test species shall include a fish, an invertebrate, and an aquatic plant. After the screening period, the most sensitive test species shall be used for the monthly testing. Repeat screening periods may be terminated after the first

month if the most sensitive species is the same as found previously to be most sensitive. Dilution and control water should be obtained from an unaffected area of the receiving waters. The sensitivity of the test organisms to a reference toxicant shall be determined concurrently with each bioassay test and reported with test results.

D. Receiving Water Monitoring

1. Surf Zone Water Quality Monitoring

For the period of January 2000 through December 2005, samples collected at several surf zone stations have relatively frequently showed elevated bacterial levels that exceeded water quality objectives of the Ocean Plan for total and fecal coliform and exceeded recommended levels for enterococcus. Consistent elevated levels of total and fecal coliform and enterococcus were particularly identified at the San Juan Creek monitoring stations (C1 and C2).

Recognizing that significant water-contact recreation, such as surfing and scuba diving, occurs year-round in ocean waters that may be impacted by the discharge from the Ocean Outfall, the Regional Board adopted a Technical Change Order No. 1 to Order No. 2000-13 which increased the surf zone monitoring frequency to twice per week from the previous minimum frequency of once per week from May 1 through October 31, and once a week from the previous once every other week from November 1 through April 30 of each year. Order and MRP No. R9-2006-0054 retain the requirements of Order No. 2000-13 for surf zone water quality monitoring.

It should be noted that in a January 9, 2006 letter to the Regional Water Board, SOCWA requested that a more equitable approach to surf zone monitoring be considered. SOCWA particularly requested a reduction in the monitoring frequency and number of surf zone monitoring stations to be consistent with the requirements of other dischargers along the southern coast of California. Although in its letter SOCWA had proposed several possible alternatives to the existing surf zone monitoring requirements, the Regional Water Board does not believe that enough information exists to reduce the surf zone monitoring requirements as part of this Order. However, in order to properly assess the opportunity for more equitable distribution of surf zone monitoring requirements, the Regional Water Board is requiring that SOCWA prepare and submit an analysis of surf zone monitoring alternatives in the vicinity of the Ocean Outfall. This analysis shall address at a minimum, 1) identification of other interested parties that should have responsibilities for participating in surf zone monitoring in the vicinity of the Ocean Outfall; 2) alternative techniques and options to accurately monitor and track the Ocean Outfall discharge plume to verify that the discharge plume does not enter the surf zones; and 3) identification of alternatives for identifying the bacterial source(s) in the vicinity of the mouth of San Juan Creek.

2. Near Shore Water Quality Monitoring

For the sample period of January 2000 through December 2005, samples collected at each of the near shore stations have infrequently exceeded the recommended levels for total coliform, fecal coliform, and enterococcus; most sample results were reported as below the method detection limit for the period.

To continue to assess bacteriological conditions in areas used for body contact activities and where shellfish and/or kelp may be harvested, and to continue to assess aesthetic conditions for general boating and recreational uses, Order and MRP No. R9-2006-0054 retains the requirements of Order No. 2000-13 for near shore water quality monitoring. Particularly, MRP No. R9-2006-0054 establishes monitoring at six near shore locations for total and fecal coliform and enterococcus bacteria in surface samples on a year-round, monthly basis. These stations are located at the 30-foot depth contours and at three locations up-coast and down-coast from the outfall. Enterococcus monitoring may be suspended in accordance with the conditions contained in Appendix E - Monitoring and Reporting Program.

3. Offshore Water Quality Monitoring

For the sample period of January 2000 through December 2005, samples at several of the offshore water quality monitoring stations showed elevated bacteria levels exceeding water quality objectives of the Ocean Plan. This was particularly the case in 2003 and 2004, where several relatively high levels were reported. Most other sample results were reported below the method detection limit for the period of review.

To determine compliance with water quality objectives of the Ocean Plan and to determine if Ocean Outfall discharges cause significant impacts to water quality within the zone of initial dilution, and beyond the zone of initial dilution, MRP No. R9-2006-0054 retains the requirements of Order No. 2000-13 for offshore water quality monitoring. Specifically, MRP No. R9-2006-0054 establishes a schedule of monitoring at seven offshore locations for total and fecal coliform and enterococcus bacteria in surface and mid-depth samples on a year-round, monthly basis. In addition, monitoring requirements at the offshore stations have been included for temperature, dissolved oxygen, salinity, and pH in surface, mid-depth, and bottom samples on a year-round, monthly basis to provide adequate data for evaluating initial dilution.

E. Other Monitoring Requirements

1. Benthic Monitoring

To assess the status of the benthic community and to evaluate the physical and chemical quality of sediments in the receiving water, Order No. R9-2006-0054 retains the requirements of Order No. 2000-13 for benthic monitoring. Specifically, Order No. R9-2006-0054 requires the following monitoring at all offshore stations

during the 4th year of this Order.

a. Sediment Characteristics. Analyses shall be performed on the upper 2 inches of sediment core samples in accordance with the following schedule:

Table 20. Sediment Monitoring Requirements

Determination	Units	Type of Sample	Minimum Frequency
Sulfides	mg/kg	Core	Semiannually
Total Chlorinated Hydrocarbons	mg/kg	Core	Semiannually
BOD_5	mg/kg	Core	Semiannually
COD	mg/kg	Core	Semiannually
Particle Size Distribution	mg/kg	Core	Semiannually
Arsenic	mg/kg	Core	Annually
Cadmium	mg/kg	Core	Annually
Total Chromium	mg/kg	Core	Annually
Copper	mg/kg	Core	Annually
Lead	mg/kg	Core	Annually
Mercury	mg/kg	Core	Annually
Nickel	mg/kg	Core	Annually
Silver	mg/kg	Core	Annually
Zinc	mg/kg	Core	Annually
Cyanide	mg/kg	Core	Annually
Phenolic Compounds (non-chlorinated)	mg/kg	Core	Annually
Chlorinated Phenolics	mg/kg	Core	Annually
Aldrin and Dieldrin	mg/kg	Core	Annually
Chlordane and Related Compounds	mg/kg	Core	Annually
DDT and Derivatives	mg/kg	Core	Annually
Endrin	mg/kg	Core	Annually
HCH	mg/kg	Core	Annually
PCBs	mg/kg	Core	Annually
Toxaphene	mg/kg	Core	Annually
Radioactivity	pCi/kg	Core	Annually

b. Infauna. Samples shall be collected with a Paterson, Smith-McIntyre, or orange-peel type dredge, having an open sampling area of not less than 124 square inches and a sediment capacity of not less than 210 cubic inches. The sediment shall be sifted through a 1-millimeter mesh screen and all organisms shall be identified to as low a taxon as possible.

Table 21. Infauna Monitoring Requirements

Determination	Units	Minimum Frequency
Benthic Biota	Identification and Enumeration	Three grabs; Semiannually during Year 4

If the Discharger does not comply with effluent limitations of the Order, the Regional Water Board may require the Discharger to perform the sediment monitoring, described above, on a year-round basis during the term of Order No. R9-2006-0054.

2. Demersal Fish and Macroinvertebrate Monitoring

MRP No. R9-2006-0054 retains the requirements of Order No. 2000-13 for demersal fish and macroinvertebrate monitoring. Order No. R9-2006-0054 specifically requires the Discharger to establish a 30-meter band transect on the ocean bottom, within the receiving waters. During 12-month period of the 4th year of Order No. R9-2006-0054, the Discharger must perform a survey of demersal fish and macroinvertebrates within the transect. If the Discharger does not comply with effluent limitations of the Order, the Regional Water Board may also require the Discharger to perform this monitoring, one time each year during the term of Order No. R9-2006-0054.

3. Kelp Bed Monitoring

Order and MRP No. R9-2006-0054 retain the requirements of Order No. 2000-13 for kelp bed monitoring. The purpose of this monitoring is to assess the extent to which the discharge of wastes may affect the areal extent and health of coastal kelp beds. Order No. R9-2006-0054 specifically requires the Discharger to participate with other ocean Dischargers in the San Diego Region in an annual regional kelp bed photographic survey.

4. Solids Monitoring

The Discharger shall report, annually, the volume of screenings, sludges, grit, and other solids generated and/or removed during wastewater treatment and the locations where these waste materials are placed for disposal.

VII. RATIONALE FOR PROVISIONS

A. Standard Provisions

Standard Provisions, which in accordance with 40 CFR 122.41 and 122.42, apply to all NPDES discharges and must be included in every NPDES permit, are provided in Attachment D to the Order. Also included are Regional Water Board standard provisions that are included in all permits issued by the Regional Water Board.

B. Special Provisions

1. Re-opener Provisions

   Order No. R9-2006-0054 may be re-opened and modified, revoked, and reissued or terminated in accordance with the provisions of 40 CFR Sections 122, 124, and 125.

2. Special Studies and Additional Monitoring Requirements

   a. Treatment Plant Capacity

      The treatment plant capacity study required by Order No. R9-2006-0054 shall serve as an indicator for the Regional Water Board of increasing hydraulic capacity and growth in the service area for each contributing wastewater treatment plant.

   b. Spill Reporting Requirements

      Order No. R9-2006-0054 establishes a reporting protocol for how different types of spills covered by this Order shall be reported to regulatory agencies.

   c. Solids Monitoring

      Order No. R9-2006-0054 retains the wastewater treatment plant solids monitoring requirements from Order No. 2000-13.

   d. Pretreatment Program

      Pursuant to 40 CFR Part 403, pretreatment program implementation requirements established in Order No. 2000-13 are retained by this Order. The pretreatment program implementation requirements are based on the standard permit language provided by USEPA Region 9. In addition to the standard program implementation requirements, Order No. R9-2006-0054 includes requirements for re-evaluation of local limits with respect to the effluent limits and reporting requirements included in this Order as well as all other applicable regulations.

   e. Single Operational Upset

      1) The term “upset” has broad and narrow definitions in *Attachment A – Definitions* because the term is used both to refer to an “upset” in the general sense as any malfunction or operational failure at a treatment facility and also in a more specific sense to refer to an “upset” as defined at 40 CFR 122.41 (n). The determination that the term “upset” has broad and narrow definitions is discussed further below.

2) Regulatory Upset Defense.
Provision 8 of *Attachment D – Standard Provisions* addresses the use of the regulatory upset defense to completely relieve dischargers of liability for violations under specific situations. According to the US EPA Memorandum "Issuance of Guidance Interpreting Single Operational Upset" (September 27, 1989), upset events that fit the definition of "upset" under 40 CFR 122.41 (n) "provide those who violate technology-based effluent limitations . . . with an affirmative defense to allegations of permit noncompliance, if the exceedance results from an exceptional, unintentional incident which is beyond the control of the party who discharges in violation of his permit. A party who successfully claims upset is not legally liable for the exceedances at issue, and has not violated the (Clean Water Act), his NPDES permit, or categorical pretreatment standards." 40 CFR 122.41 (n) states that the regulatory upset defense does not apply to those events caused by operational error, improperly designed treatment facilities, lack of preventive maintenance, or careless or improper operation. Provision 8 of Attachment D specifies the conditions that the Discharger must satisfy to claim the regulatory upset defense.

3) Single Operational Upset Defense.
Compliance Determination (Section VII.N of Order No. R9-2006-0054) addresses how a Discharger may be able to limit his liability in the event of a single operational upset (SOU) resulting in multiple violations. The USEPA Memorandum "Issuance of Guidance Interpreting Single Operational Upset" (September 27, 1989) provides the necessary regulatory guidance in case of SOU except for purposes of California Water Code Section 13385 (h) and (i). The USEPA SOU guidance memo spells out that multiple violations due to an SOU are treated as one violation for each day only. For example, an SOU that results in multiple violations each day over a period of seven days will result in counting seven violations because the multiple violations on each of the seven days are treated as one violation for each day only. If the State or Regional Water Board is taking enforcement in accordance with CWC 13385 (h) and (i), commonly referred to as Mandatory Minimum Penalties, CWC Section 13385 (f)(2) expands a POTW discharger's ability to limit liability in the case of an SOU by allowing all violations that occur within a 30-day period, instead of each day, due to an SOU to be counted as one violation.

The regulatory upset defense completely relieves a discharger of all liability for violations of technology-based effluent limitations but not in cases where the violations are caused by operator error. In contrast, according to the USEPA SOU guidance memo, the SOU defense serves to only limit a discharger's liability for violations but applies to both technology-based and water quality-based effluent limitations even if caused by unknowing and unintentional operator error. For purposes of Mandatory Minimum Penalties in accordance with CWC Section 13385 (f)(2), the SOU defense does not

apply when the upset was caused by operator error and was not due to discharger negligence.

The effect of CWC Section 13385 (f)(2) on reducing a POTW discharger's liability is illustrated in the following example:

> A POTW discharged 20,000 gallons of treated effluent each day over two days, and the effluent quality exceeded the concentration effluent limitations and the mass emission rate limitations of the POTW's NPDES permit for iron and copper on both days. The POTW reported to the Regional Water Board that despite its best efforts, increased filamentous bacteria growth in the aeration tank due to a single operational upset resulted in a slight reduction in settling in the secondary clarifier which in turn resulted in the increased iron and copper content of the effluent. The Regional Water Board determined that four serious violations occurred on each day for a total of eight serious violations over the two days due to a single operational upset. Taking the SOU defense into account according to USEPA guidance, the Regional Water Board would determine that the four violations on each day collapse to one violation on each day and the POTW can be civilly liable for up to $10,000 per day of violation plus up to $10 per gallon discharged over 1,000 gallons [in accordance with CWC Section 13385 (c)] for a total possible maximum civil liability of $410,000 (i.e., $20,000 for two days of violations and $390,000 for the 39,000 gallons discharged over the initial 1,000 gallons). However, if the Regional Water Board determines mandatory minimum penalties in accordance with CWC Sections 13385 (h) and (i), the Regional Water Board must also consider the SOU defense in accordance with CWC Section 13385 (f)(2). In that case, the eight serious violations collapse to one violation with a Mandatory Minimum Penalty of $3,000.

4) Twenty-four Hour Reporting for Upsets.
Provision E.5(b)(2) of *Attachment D – Standard Provisions* requires that "any upset that exceeds any effluent limitation in this Order" must be reported within 24 hours from the time the discharger becomes aware of the circumstances. This standard provision is authorized at 40 CFR 122.41(l)(6)(ii)(B) and is interpreted to require reporting of any upset, in the broad sense, that results in an exceedance of any effluent limitation. The term "upset" in this provision cannot be limited to the meaning of the term "upset" within 40 CFR 122.41 (n), which only applies to exceedances of technology-based effluent limitations, and must be interpreted broadly because an "upset", in the broad sense, can result in exceedance of water quality-based effluent limitations. Therefore, this provision also applies to the reporting of single operational upsets.

VIII. PUBLIC PARTICIPATION

The Regional Water Board is considering the issuance of WDRs that will serve as a NPDES permit for the SOCWA Ocean Outfall. As a step in the WDR adoption process, the Regional Water Board staff has developed tentative WDRs. The Regional Water Board encourages public participation in the WDR adoption process.

A. Notification of Interested Parties

The Regional Water Board has notified the Discharger and interested agencies and persons of its intent to prescribe waste discharge requirements for the discharge and has provided them with an opportunity to submit their written comments and recommendations. Notification was provided through publication in the Orange County Register on May 8, 2006 and by letters mailed to interested parties on May 5, 2006.

B. Written Comments

The staff determinations are tentative. Interested persons are invited to submit written comments concerning these tentative WDRs. Comments should be submitted either in person or by mail to the Executive Office at the Regional Water Board at the address above on the cover page of this Order.

To be fully responded to by staff and considered by the Regional Water Board, written comments should be received at the Regional Water Board offices by 5:00 p.m. on June 7, 2006.

C. Public Hearing

The Regional Water Board will hold a public hearing on the tentative WDRs during its regular Board meeting on the following date and time and at the following location:

Date: June 14, 2006
Time: 9:00 am
Location: Regional Water Quality Control Board, San Diego
9174 Sky Park Court Suite 100
San Diego, CA 92123

Interested persons are invited to attend. At the public hearing, the Regional Water Board will hear testimony, if any, pertinent to the discharge, WDRs, and permit. Oral testimony will be heard; however, for accuracy of the record, important testimony should be in writing.

Please be aware that dates and venues may change. Our web address is **http://www.waterboards.ca.gov/sandiego** where you can access the current agenda for changes in dates and locations.

D. Waste Discharge Requirements Petitions

Any aggrieved person may petition the State Water Board to review the decision of the Regional Water Board regarding the final WDRs. The petition must be submitted within 30 days of the Regional Water Board's action to the following address:

State Water Resources Control Board
Office of Chief Counsel
P.O. Box 100, 1001 I Street
Sacramento, CA 95812-0100

E. Information and Copying

The Report of Waste Discharge (RoWD), related documents, tentative effluent limitations and special provisions, comments received, and other information are on file and may be inspected at the Regional Water Board office at 9174 Sky Park Court, Suite 100, San Diego, CA 92123 at any time between 8:30 a.m. and 4:45 p.m., Monday through Friday, except state holidays. Copying of documents may be arranged through the Regional Water Board by calling 858-467-2952.

F. Register of Interested Persons

Any person interested in being placed on the mailing list for information regarding the WDRs and NPDES permit should contact the Regional Water Board, reference this facility, and provide a name, address, and phone number.

G. Additional Information

Requests for additional information or questions regarding this Order should be directed to Joann Lim at (858) 637-5589.