CALIFORNIA REGIONAL WATER QUALITY CONTROL BOARD
CENTRAL VALLEY REGION

11020 Sun Center Drive, #200 Rancho Cordova, California 95670-6114
Phone (916) 464-3291 • Fax (916) 464-4645
http://www.waterboards.ca.gov/centralvalley

ORDER R5-2017-XXXX
NPDES NO. CA0079103

WASTE DISCHARGE REQUIREMENTS FOR THE CITY OF MODESTO WATER QUALITY CONTROL FACILITY STANISLAUS COUNTY

The following Discharger is subject to waste discharge requirements (WDR's) set forth in this Order:

Table 1. Discharger Information

Discharger	City of Modesto
Name of Facility	Water Quality Control Facility
Facility Address	1221 Sutter Avenue
	Modesto, CA 95351
	Stanislaus County

Table 2. Discharge Location

Discharge Point	Effluent Description	Discharge Point Latitude (North)	Discharge Point Longitude (West)	Receiving Water
001	Tertiary Treated Wastewater	37° 31' 20"	121° 05' 47"	San Joaquin River

Table 3. Administrative Information

This Order was adopted on:	**X June 2017**
This Order shall become effective on:	**1 August 2017**
This Order shall expire on:	**31 July 2022**
The Discharger shall file a Report of Waste Discharge as an application for reissuance of WDR's in accordance with title 23, California Code of Regulations (CCR), and an application for reissuance of a National Pollutant Discharge Elimination System (NPDES) permit no later than:	**31 July 2021**
The U.S. Environmental Protection Agency (U.S. EPA) and the California Regional Water Quality Control Board, Central Valley Region have classified this discharge as follows:	Major

I, PAMELA C. CREEDON, Executive Officer, do hereby certify that this Order with all attachments is a full, true, and correct copy of the Order adopted by the California Regional Water Quality Control Board, Central Valley Region, on **X June 2017.**

_____
PAMELA C. CREEDON, Executive Officer

CONTENTS

I. FACILITY INFORMATION 3
II. FINDINGS 3
III. DISCHARGE PROHIBITIONS 4
IV. EFFLUENT LIMITATIONS AND DISCHARGE SPECIFICATIONS 4
A. EFFLUENT LIMITATIONS – DISCHARGE POINT 001 4
1. FINAL EFFLUENT LIMITATIONS – DISCHARGE POINT 001 4
2. INTERIM EFFLUENT LIMITATIONS 6
B. LAND DISCHARGE SPECIFICATIONS – NOT APPLICABLE 6
C. RECYCLING SPECIFICATIONS – NOT APPLICABLE 6
V. RECEIVING WATER LIMITATIONS 6
A. SURFACE WATER LIMITATIONS 6
B. GROUNDWATER LIMITATIONS – NOT APPLICABLE ..... 8~~9~~
VI. PROVISIONS ..... 8~~9~~
A. STANDARD PROVISIONS ..... 8~~9~~
B. MONITORING AND REPORTING PROGRAM (MRP) REQUIREMENTS ..... 12~~13~~
C. SPECIAL PROVISIONS ..... 12~~14~~
1. REOPENER PROVISIONS ..... 12~~14~~
2. SPECIAL STUDIES, TECHNICAL REPORTS AND ADDITIONAL MONITORING REQUIREMENTS ..... 13~~15~~
3. BEST MANAGEMENT PRACTICES AND POLLUTION PREVENTION ..... 15~~16~~
4. CONSTRUCTION, OPERATION AND MAINTENANCE SPECIFICATIONS ..... 15~~16~~
5. SPECIAL PROVISIONS FOR PUBLICLY-OWNED TREATMENT WORKS (POTW'S) 16~~18~~
6. OTHER SPECIAL PROVISIONS ..... 17~~19~~
7. COMPLIANCE SCHEDULES ..... 18~~20~~
VII. COMPLIANCE DETERMINATION ..... 19~~21~~

TABLES

TABLE 1. DISCHARGER INFORMATION 1
TABLE 2. DISCHARGE LOCATION 1
TABLE 3. ADMINISTRATIVE INFORMATION 1
TABLE 4. EFFLUENT LIMITATIONS 4

ATTACHMENTS

ATTACHMENT A – DEFINITIONS A-1
ATTACHMENT B – MAP B-1
ATTACHMENT C – FLOW SCHEMATIC C-1
ATTACHMENT D – STANDARD PROVISIONS D-1
ATTACHMENT E – MONITORING AND REPORTING PROGRAM E-1
ATTACHMENT F – FACT SHEET F-1
ATTACHMENT G – SUMMARY OF REASONABLE POTENTIAL ANALYSIS G-1
ATTACHMENT H – CALCULATION OF WQBEL'S H-1

I. FACILITY INFORMATION

Information describing the City of Modesto, Water Quality Control Facility (Facility) is summarized in Table 1 and in sections I and II of the Fact Sheet (Attachment F). Section I of the Fact Sheet also includes information regarding the Facility's permit application.

II. FINDINGS

The California Regional Water Quality Control Board, Central Valley Region (hereinafter Central Valley Water Board), finds:

A. Legal Authorities. This Order serves as WDR's pursuant to article 4, chapter 4, division 7 of the California Water Code (commencing with section 13260). This Order is also issued pursuant to section 402 of the federal Clean Water Act (CWA) and implementing regulations adopted by the U.S. EPA and chapter 5.5, division 7 of the Water Code (commencing with section 13370). It shall serve as a National Pollutant Discharge Elimination System (NPDES) permit authorizing the Discharger to discharge into waters of the United States at the discharge location described in Table 2 subject to the WDR's in this Order.

B. Background and Rationale for Requirements. The Central Valley Water Board developed the requirements in this Order based on information submitted as part of the application, through monitoring and reporting programs, and other available information. The Fact Sheet (Attachment F), which contains background information and rationale for the requirements in this Order, is hereby incorporated into and constitutes Findings for this Order. Attachments A through E and G through H are also incorporated into this Order.

C. Provisions and Requirements Implementing State Law - Not Applicable

D. Monitoring and Reporting. 40 C.F.R. section 122.48 requires that all NPDES permits specify requirements for recording and reporting monitoring results. Water Code sections 13267 and 13383 authorize the Central Valley Water Board to require technical and monitoring reports. The Monitoring and Reporting Program establishes monitoring and reporting requirements to implement federal and State requirements. The Monitoring and Reporting Program is provided in Attachment E.

The technical and monitoring reports in this Order are required in accordance with Water Code section 13267, which states the following in subsection (b)(1), *"In conducting an investigation specified in subdivision (a), the regional board may require that any person who has discharged, discharges, or is suspected of having discharged or discharging, or who proposes to discharge waste within its region, or any citizen or domiciliary, or political agency or entity of this state who has discharged, discharges, or is suspected of having discharged or discharging, or who proposes to discharge, waste outside of its region could affect the quality of waters within its region shall furnish, under penalty of perjury, technical or monitoring program reports which the regional board requires. The burden, including costs, of these reports shall bear a reasonable relationship to the need for the report and the benefits to be obtained from the reports. In requiring those reports, the regional board shall provide the person with a written explanation with regard to the need for the reports, and shall identify the evidence that supports requiring that person to provide the reports."*

The Discharger owns and operates the Facility subject to this Order. The monitoring reports required by this Order are necessary to determine compliance with this Order. The need for the monitoring reports is discussed in the Fact Sheet.

E. Notification of Interested Parties. The Central Valley Water Board has notified the Discharger and interested agencies and persons of its intent to prescribe WDR's for the

discharge and has provided them with an opportunity to submit their written comments and recommendations. Details of the notification are provided in the Fact Sheet.

F. Consideration of Public Comment. The Central Valley Water Board, in a public meeting, heard and considered all comments pertaining to the discharge. Details of the Public Hearing are provided in the Fact Sheet.

THEREFORE, IT IS HEREBY ORDERED that Order R5-2012-0031 is rescinded upon the effective date of this Order except for enforcement purposes, and, in order to meet the provisions contained in division 7 of the Water Code (commencing with section 13000) and regulations adopted thereunder, and the provisions of the CWA and regulations and guidelines adopted thereunder, the Discharger shall comply with the requirements in this Order. This action in no way prevents the Central Valley Water Board from taking enforcement action for past violations of the previous Order.

III. DISCHARGE PROHIBITIONS

A. Discharge of wastewater from the Facility, as the Facility is specifically described in the Fact Sheet in section II.B, in a manner different from that described in this Order is prohibited, unless permitted by another Order.

B. The by-pass or overflow of wastes to surface waters is prohibited, except as allowed by Federal Standard Provisions I.G. and I.H. (Attachment D).

C. Neither the discharge nor its treatment shall create a nuisance as defined in section 13050 of the Water Code.

D. The Discharger shall not allow pollutant-free wastewater to be discharged into the treatment or disposal system in amounts that significantly diminish the system's capability to comply with this Order. Pollutant-free wastewater means rainfall, groundwater, cooling waters, and condensates that are essentially free of pollutants.

E. Discharge of waste classified as "hazardous", as defined in the California Code of Regulations (CCR), Title 22, section 66261.1 et seq., is prohibited.

IV. EFFLUENT LIMITATIONS AND DISCHARGE SPECIFICATIONS

A. Effluent Limitations – Discharge Point 001

1. Final Effluent Limitations – Discharge Point 001

The Discharger shall maintain compliance with the following effluent limitations at Discharge Point 001, with compliance measured at Monitoring Location EFF-001 as described in the Monitoring and Reporting Program, Attachment E:

a. The Discharger shall maintain compliance with the effluent limitations specified in Table 4:

Table 4. Effluent Limitations

Parameter	Units	Effluent Limitations				
		Average Monthly	Average Weekly	Maximum Daily	Instantaneous Minimum	Instantaneous Maximum
Conventional Pollutants						
Biochemical Oxygen Demand (5-day @ 20°C)	mg/L	10	15	20	--	--
	lbs/day[1]	1,200	1,900	2,500	--	--
	lbs/day[2]	1,600	2,400	3,200	--	--

Parameter	Units	Effluent Limitations				
		Average Monthly	Average Weekly	Maximum Daily	Instantaneous Minimum	Instantaneous Maximum
pH	standard units	--	--	--	6.5	8.5
Total Suspended Solids	mg/L	10	15	20	--	--
	lbs/day[1]	1,200	1,900	2,500	--	--
	lbs/day[2]	1,600	2,400	3,200	--	--
Non-Conventional Pollutants						
Ammonia Nitrogen, Total (as N)	mg/L	0.80	1.7	--	--	--
	lbs/day[1]	99	210	--	--	--
	lbs/day[2]	130	270	--	--	--
Electrical Conductivity @ 25ºC (1 April – 31 May)	µmhos/cm	700[3]	--	--	--	--
Electrical Conductivity @ 25ºC (1 October – 31 March)	µmhos/cm	1000[3]	--	--	--	--
Nitrate Plus Nitrite (as N)	mg/L	10	19	--	--	--

[1] Based on a design average daily discharge flow of 14.9 million gallons per day (MGD). Effective until compliance with Special Provision IV.C.6.b.

[2] Based on a design average daily discharge flow of 19.1 MGD. Effective upon compliance with Special Provisions VI.C.6.b.

[3] The final effluent limitations for electrical conductivity are not in effect until the final compliance dates specified in the electrical conductivity compliance schedule (see Section VI.C.7.a.).

b. **Percent Removal:** The average monthly percent removal of 5-day biochemical oxygen demand (BOD_5) and total suspended solids (TSS) shall not be less than 85 percent.

c. **Acute Whole Effluent Toxicity.** Survival of aquatic organisms in 96-hour bioassays of undiluted waste shall be no less than:

   i. 70%, minimum for any one bioassay; and
   ii. 90%, median for any three consecutive bioassays.

d. **Total Coliform Organisms.** Effluent total coliform organisms shall not exceed:

   i. 2.2 MPN/100 mL, as a 7-day median;
   ii. 23 MPN/100 mL, more than once in any 30-day period; and
   iii. 240 MPN/100 mL, at any time.

e. **Average Dry Weather Discharge Flow**

   i. The average dry weather discharge flow shall not exceed 14.9 MGD until compliance with Special Provision VI.C.6.b.

   ii. Effective upon compliance with Special Provision VI.C.6.b, the average dry weather discharge flow shall not exceed 19.1 MGD.

f. **Diazinon and Chlorpyrifos**

i. **Average Monthly Effluent Limitation**

$$S_{AMEL} = \frac{C_{D\ M-AVG}}{0.079} + \frac{C_{C\ M-AVG}}{0.012} \leq 1.0$$

$C_{D\ M-AVG}$ = average monthly diazinon effluent concentration in µg/L.
$C_{C\ M-AVG}$ = average monthly chlorpyrifos effluent concentration in µg/L.

ii. **Average Weekly Effluent Limitation**

$$S_{AWEL} = \frac{C_{D\ W-AVG}}{0.14} + \frac{C_{C\ W-AVG}}{0.021} \leq 1.0$$

$C_{D\ W-AVG}$ = average weekly diazinon effluent concentration in µg/L.
$C_{C\ W-AVG}$ = average weekly chlorpyrifos effluent concentration in µg/L.

g. **Mercury.** The total calendar year annual mass discharge of total recoverable mercury shall not exceed 1.16 lbs.

2. Interim Effluent Limitations

The Discharger shall maintain compliance with the following effluent limitations at Discharge Point 001, with compliance measured at Monitoring Location EFF-001 as described in the Monitoring and Reporting Program, Attachment E:

a. **Electrical Conductivity. Effective immediately**, the effluent monthly average electrical conductivity shall not exceed 1,400 µmhos/cm.[1]

B. Land Discharge Specifications – Not Applicable

Land discharge specifications for the Facility are included in WDR Order 99-112.

C. Recycling Specifications – Not Applicable

Recycling specifications for the Facility are included in WDR Order 99-112.

V. RECEIVING WATER LIMITATIONS

A. Surface Water Limitations

The discharge shall not cause the following in the San Joaquin River.

1. **Bacteria.** The fecal coliform concentration, based on a minimum of not less than five samples for any 30-day period, to exceed a geometric mean of 200 MPN/100 mL, nor more than 10 percent of the total number of fecal coliform samples taken during any 30-day period to exceed 400 MPN/100 mL.

2. **Biostimulatory Substances.** Water to contain biostimulatory substances which promote aquatic growths in concentrations that cause nuisance or adversely affect beneficial uses.

3. **Chemical Constituents.** Chemical constituents to be present in concentrations that adversely affect beneficial uses.

4. **Color.** Discoloration that causes nuisance or adversely affects beneficial uses.

[1] The interim effluent limitation for electrical conductivity shall apply in lieu of the corresponding final effluent limitations for electrical conductivity specified in Table 4, and shall be in effect while the compliance schedule is in effect (see Section VI.C.7.a.).

5. **Dissolved Oxygen:**
    a. The monthly median of the mean daily dissolved oxygen concentration to fall below 85 percent of saturation in the main water mass;
    b. The 95 percentile dissolved oxygen concentration to fall below 75 percent of saturation; nor
    c. The dissolved oxygen concentration to be reduced below 7.0 mg/L at any time.
6. **Floating Material.** Floating material to be present in amounts that cause nuisance or adversely affect beneficial uses.
7. **Oil and Grease.** Oils, greases, waxes, or other materials to be present in concentrations that cause nuisance, result in a visible film or coating on the surface of the water or on objects in the water, or otherwise adversely affect beneficial uses.
8. **pH.** The pH to be depressed below 6.5 nor raised above 8.5.
9. **Pesticides:**
    a. Pesticides to be present, individually or in combination, in concentrations that adversely affect beneficial uses;
    b. Pesticides to be present in bottom sediments or aquatic life in concentrations that adversely affect beneficial uses;
    c. Total identifiable persistent chlorinated hydrocarbon pesticides to be present in the water column at concentrations detectable within the accuracy of analytical methods approved by U.S. EPA or the Executive Officer;
    d. Pesticide concentrations to exceed those allowable by applicable antidegradation policies (see State Water Resources Control Board (State Water Board) Resolution 68-16 and 40 C.F.R 131.12.);
    e. Pesticide concentrations to exceed the lowest levels technically and economically achievable;
    f. Pesticides to be present in concentration in excess of the maximum contaminant levels (MCL's) set forth in CCR, Title 22, division 4, chapter 15 (Title 22); nor
    g. Thiobencarb to be present in excess of 1.0 µg/L.
10. **Radioactivity:**
    a. Radionuclides to be present in concentrations that are harmful to human, plant, animal, or aquatic life nor that result in the accumulation of radionuclides in the food web to an extent that presents a hazard to human, plant, animal, or aquatic life.
    b. Radionuclides to be present in excess of the MCL's specified in Table 64442 of section 64442 and Table 64443 of section 64443 of Title 22 of the CCR.
11. **Suspended Sediments.** The suspended sediment load and suspended sediment discharge rate of surface waters to be altered in such a manner as to cause nuisance or adversely affect beneficial uses.
12. **Settleable Substances.** Substances to be present in concentrations that result in the deposition of material that causes nuisance or adversely affects beneficial uses.

13. **Suspended Material.** Suspended material to be present in concentrations that cause nuisance or adversely affect beneficial uses.

14. **Taste and Odors.** Taste- or odor-producing substances to be present in concentrations that impart undesirable tastes or odors to fish flesh or other edible products of aquatic origin, or that cause nuisance, or otherwise adversely affect beneficial uses.

15. **Temperature.** The natural temperature to be increased by more than 5°F. Compliance to be determined based on the difference in temperature at Monitoring Locations RSW-001 and RSW-002.

16. **Toxicity.** Toxic substances to be present, individually or in combination, in concentrations that produce detrimental physiological responses in human, plant, animal, or aquatic life.

17. **Turbidity:**

    a. Shall not exceed 2 Nephelometric Turbidity Units (NTU) where natural turbidity is less than 1 NTU;

    b. Shall not increase more than 1 NTU where natural turbidity is between 1 and 5 NTUs;

    c. Shall not increase more than 20 percent where natural turbidity is between 5 and 50 NTUs;

    d. Shall not increase more than 10 NTU where natural turbidity is between 50 and 100 NTUs; nor

    e. Shall not increase more than 10 percent where natural turbidity is greater than 100 NTUs.

B. Groundwater Limitations – Not Applicable

VI. PROVISIONS

A. Standard Provisions

1. The Discharger shall comply with all Standard Provisions included in Attachment D.

2. The Discharger shall comply with the following provisions. In the event that there is any conflict, duplication, or overlap between provisions specified by this Order, the more stringent provision shall apply:

    a. If the Discharger's wastewater treatment plant is publicly owned or subject to regulation by California Public Utilities Commission, it shall be supervised and operated by persons possessing certificates of appropriate grade according to Title 23, CCR, division 3, chapter 26.

    b. After notice and opportunity for a hearing, this Order may be terminated or modified for cause, including, but not limited to:

        i. violation of any term or condition contained in this Order;

        ii. obtaining this Order by misrepresentation or by failing to disclose fully all relevant facts;

        iii. a change in any condition that requires either a temporary or permanent reduction or elimination of the authorized discharge; and

iv. a material change in the character, location, or volume of discharge.

The causes for modification include:

i. *New regulations.* New regulations have been promulgated under section 405(d) of the CWA, or the standards or regulations on which the permit was based have been changed by promulgation of amended standards or regulations or by judicial decision after the permit was issued.

ii. *Land application plans.* When required by a permit condition to incorporate a land application plan for beneficial reuse of sewage sludge, to revise an existing land application plan, or to add a land application plan.

iii. *Change in sludge use or disposal practice.* Under 40 C.F.R section 122.62(a)(1), a change in the Discharger's sludge use or disposal practice is a cause for modification of the permit. It is cause for revocation and reissuance if the Discharger requests or agrees.

The Central Valley Water Board may review and revise this Order at any time upon application of any affected person or the Central Valley Water Board's own motion.

c. If a toxic effluent standard or prohibition (including any scheduled compliance specified in such effluent standard or prohibition) is established under section 307(a) of the CWA, or amendments thereto, for a toxic pollutant that is present in the discharge authorized herein, and such standard or prohibition is more stringent than any limitation upon such pollutant in this Order, the Central Valley Water Board will revise or modify this Order in accordance with such toxic effluent standard or prohibition.

The Discharger shall comply with effluent standards and prohibitions within the time provided in the regulations that establish those standards or prohibitions, even if this Order has not yet been modified.

d. This Order shall be modified, or alternately revoked and reissued, to comply with any applicable effluent standard or limitation issued or approved under sections 301(b)(2)(C) and (D), 304(b)(2), and 307(a)(2) of the CWA, if the effluent standard or limitation so issued or approved:

i. Contains different conditions or is otherwise more stringent than any effluent limitation in the Order; or

ii. Controls any pollutant limited in the Order.

The Order, as modified or reissued under this paragraph, shall also contain any other requirements of the CWA where applicable.

e. The provisions of this Order are severable. If any provision of this Order is found invalid, the remainder of this Order shall not be affected.

f. The Discharger shall take all reasonable steps to minimize any adverse effects to waters of the State or users of those waters resulting from any discharge or sludge use or disposal in violation of this Order. Reasonable steps shall include such accelerated or additional monitoring as necessary to determine the nature and impact of the non-complying discharge or sludge use or disposal.

g. The Discharger shall ensure compliance with any existing or future pretreatment standard promulgated by U.S. EPA under section 307 of the CWA, or amendment thereto, for any discharge to the municipal system.

h. A copy of this Order shall be maintained at the discharge facility and be available at all times to operating personnel. Key operating personnel shall be familiar with its content.

i. Safeguard to electric power failure:

   i. The Discharger shall provide safeguards to assure that, should there be reduction, loss, or failure of electric power, the discharge shall comply with the terms and conditions of this Order.

   ii. Upon written request by the Central Valley Water Board, the Discharger shall submit a written description of safeguards. Such safeguards may include alternate power sources, standby generators, retention capacity, operating procedures, or other means. A description of the safeguards provided shall include an analysis of the frequency, duration, and impact of power failures experienced over the past 5 years on effluent quality and on the capability of the Discharger to comply with the terms and conditions of the Order. The adequacy of the safeguards is subject to the approval of the Central Valley Water Board.

   iii. Should the treatment works not include safeguards against reduction, loss, or failure of electric power, or should the Central Valley Water Board not approve the existing safeguards, the Discharger shall, within 90 days of having been advised in writing by the Central Valley Water Board that the existing safeguards are inadequate, provide to the Central Valley Water Board and U.S. EPA a schedule of compliance for providing safeguards such that in the event of reduction, loss, or failure of electric power, the Discharger shall comply with the terms and conditions of this Order. The schedule of compliance shall, upon approval of the Central Valley Water Board, become a condition of this Order.

j. The Discharger, upon written request of the Central Valley Water Board, shall file with the Board a technical report on its preventive (failsafe) and contingency (cleanup) plans for controlling accidental discharges, and for minimizing the effect of such events. This report may be combined with that required under the Central Valley Water Board Standard Provision contained in section VI.A.2.i of this Order.

   The technical report shall:

   i. Identify the possible sources of spills, leaks, untreated waste bypass, and contaminated drainage. Loading and storage areas, power outage, waste treatment unit outage, and failure of process equipment, tanks and pipes should be considered.

   ii. Evaluate the effectiveness of present facilities and procedures and state when they became operational.

   iii. Predict the effectiveness of the proposed facilities and procedures and provide an implementation schedule containing interim and final dates when they will be constructed, implemented, or operational.

The Central Valley Water Board, after review of the technical report, may establish conditions which it deems necessary to control accidental discharges and to minimize the effects of such events. Such conditions shall be incorporated as part of this Order, upon notice to the Discharger.

k. A publicly owned treatment works whose waste flow has been increasing, or is projected to increase, shall estimate when flows will reach hydraulic and treatment capacities of its treatment and disposal facilities. The projections shall be made in January, based on the last 3 years' average dry weather flows, peak wet weather flows and total annual flows, as appropriate. When any projection shows that capacity of any part of the facilities may be exceeded in 4 years, the Discharger shall notify the Central Valley Water Board by 31 January. A copy of the notification shall be sent to appropriate local elected officials, local permitting agencies and the press. Within 120 days of the notification, the Discharger shall submit a technical report showing how it will prevent flow volumes from exceeding capacity or how it will increase capacity to handle the larger flows. The Central Valley Water Board may extend the time for submitting the report.

l. The Discharger shall submit technical reports as directed by the Executive Officer. All technical reports required herein that involve planning, investigation, evaluation, or design, or other work requiring interpretation and proper application of engineering or geologic sciences, shall be prepared by or under the direction of persons registered to practice in California pursuant to California Business and Professions Code, sections 6735, 7835, and 7835.1. To demonstrate compliance with Title 16, CCR, sections 415 and 3065, all technical reports must contain a statement of the qualifications of the responsible registered professional(s). As required by these laws, completed technical reports must bear the signature(s) and seal(s) of the registered professional(s) in a manner such that all work can be clearly attributed to the professional responsible for the work.

m. The Central Valley Water Board is authorized to enforce the terms of this permit under several provisions of the Water Code, including, but not limited to, sections 13385, 13386, and 13387.

n. In the event of any change in control or ownership of land or waste discharge facilities presently owned or controlled by the Discharger, the Discharger shall notify the succeeding owner or operator of the existence of this Order by letter, a copy of which shall be immediately forwarded to the Central Valley Water Board.

To assume operation under this Order, the succeeding owner or operator must apply in writing to the Executive Officer requesting transfer of the Order. The request must contain the requesting entity's full legal name, the state of incorporation if a corporation, address and telephone number of the persons responsible for contact with the Central Valley Water Board and a statement. The statement shall comply with the signatory and certification requirements in the federal Standard Provisions (Attachment D, section V.B) and state that the new owner or operator assumes full responsibility for compliance with this Order. Failure to submit the request shall be considered a discharge without requirements, a violation of the Water Code. Transfer shall be approved or disapproved in writing by the Executive Officer.

o. Failure to comply with provisions or requirements of this Order, or violation of other applicable laws or regulations governing discharges from this facility, may subject

the Discharger to administrative or civil liabilities, criminal penalties, and/or other enforcement remedies to ensure compliance. Additionally, certain violations may subject the Discharger to civil or criminal enforcement from appropriate local, state, or federal law enforcement entities.

p. In the event the Discharger does not comply or will be unable to comply for any reason, with any prohibition, effluent limitation, or receiving water limitation of this Order, the Discharger shall notify the Central Valley Water Board by telephone (916) 464-3291 within 24 hours of having knowledge of such noncompliance, and shall confirm this notification in writing within five days, unless the Central Valley Water Board waives confirmation. The written notification shall state the nature, time, duration, and cause of noncompliance, and shall describe the measures being taken to remedy the current noncompliance and prevent recurrence including, where applicable, a schedule of implementation. Other noncompliance requires written notification as above at the time of the normal monitoring report.

B. Monitoring and Reporting Program (MRP) Requirements

The Discharger shall comply with the MRP, and future revisions thereto, in Attachment E.

C. Special Provisions

1. Reopener Provisions

a. Conditions that necessitate a major modification of a permit are described in 40 C.F.R section 122.62, including, but not limited to:

i. If new or amended applicable water quality standards are promulgated or approved pursuant to section 303 of the CWA, or amendments thereto, this permit may be reopened and modified in accordance with the new or amended standards.

ii. When new information, that was not available at the time of permit issuance, would have justified different permit conditions at the time of issuance.

b. This Order may be reopened for modification, or revocation and reissuance, as a result of the detection of a reportable priority pollutant generated by special conditions included in this Order. These special conditions may be, but are not limited to, fish tissue sampling, whole effluent toxicity, monitoring requirements on internal waste stream(s), and monitoring for surrogate parameters. Additional requirements may be included in this Order as a result of the special condition monitoring data.

c. **Mercury.** If mercury is found to be causing toxicity based on acute or chronic toxicity test results, or if a TMDL program is adopted, this Order shall be reopened and the mass effluent limitation modified (higher or lower) or an effluent concentration limitation imposed. If the Central Valley Water Board determines that a mercury offset program is feasible for Dischargers subject to a NPDES permit, then this Order may be reopened to reevaluate the mercury mass loading limitation(s) and the need for a mercury offset program for the Discharger.

d. **Whole Effluent Toxicity (WET).** As a result of a Toxicity Reduction Evaluation (TRE), this Order may be reopened to include a numeric chronic toxicity limitation, a new acute toxicity limitation, and/or a limitation for a specific toxicant identified in the

TRE. Additionally, if the State Water Board revises the *Policy for Implementation of Toxics Standards for Inland Surface Waters, Enclosed Bays, and Estuaries of California* (State Implementation Policy or SIP) toxicity control provisions that would require the establishment of numeric chronic toxicity effluent limitations, this Order may be reopened to include a numeric chronic toxicity effluent limitation based on the new provisions.

e. **Water Effects Ratios (WER) and Metal Translators.** A default WER of 1.0 has been used in this Order for calculating criteria for applicable inorganic constituents. In addition, default dissolved-to-total metal translators have been used to convert water quality objectives from dissolved to total recoverable. If the Discharger performs studies to determine site-specific WER's and/or site-specific dissolved-to-total metal translators, this Order may be reopened to modify the effluent limitations for the applicable inorganic constituents.

f. **Ultraviolet Light (UV) Disinfection Operating Specifications.** The UV operating specifications in this Order are based on the UV guidelines developed by the National Water Research Institute (NWRI) and American Water Works Association Research Foundation (AWWRF) titled, "Ultraviolet Disinfection Guidelines for Drinking Water and Water Reuse" (NWRI guidelines). If the Discharger conducts a site-specific UV engineering study that identifies site-specific UV operating specifications that will achieve the virus inactivation equivalent to Title 22 disinfected tertiary recycled water, this Order may be reopened to modify the UV operating specifications.

g. **Basin Plan Amendment – Salinity Objectives for the Lower San Joaquin River.** The Central Valley Water Board adopted a Basin Plan Amendment on X June 2017, which establishes salinity water quality objectives in the Lower San Joaquin River from Merced River to Vernalis. Furthermore, the Basin Plan Amendment modified the Salt and Boron TMDL to clarify that NPDES point source dischargers could participate in the real-time salinity management program in lieu of complying with the wasteload allocations. Therefore, this Order may be reopened to modify salinity requirements, as appropriate, in accordance with the Basin Plan Amendment upon approval by the State Water Board, USEPA, and the Office of Administrative Law.

2. Special Studies, Technical Reports and Additional Monitoring Requirements

a. **Toxicity Reduction Evaluation Requirements.** For compliance with the Basin Plan's narrative toxicity objective, this Order requires the Discharger to conduct chronic WET testing, as specified in MRP section V. Furthermore, this Provision requires the Discharger to investigate the causes of, and identify corrective actions to reduce or eliminate effluent toxicity. If the discharge exceeds the numeric toxicity monitoring trigger during accelerated monitoring established in this Provision, the Discharger is required to initiate a TRE in accordance with an approved TRE Work Plan and take actions to mitigate the impact of the discharge and prevent recurrence of toxicity. A TRE is a site-specific study conducted in a stepwise process to identify the source(s) of toxicity and the effective control measures for effluent toxicity. TRE's are designed to identify the causative agents and sources of WET, evaluate the effectiveness of the toxicity control options, and confirm the reduction in effluent toxicity. This Provision includes procedures for accelerated chronic toxicity monitoring and TRE initiation.

i. **Accelerated Monitoring and TRE Initiation.** When the numeric toxicity monitoring trigger is exceeded during regular chronic toxicity monitoring, and the testing meets all test acceptability criteria, the Discharger shall initiate accelerated monitoring as required in the Accelerated Monitoring Specifications. The Discharger shall initiate a TRE to address effluent toxicity if any WET testing results exceed the numeric toxicity monitoring trigger during accelerated monitoring.

ii. **Numeric Toxicity Monitoring Trigger.** The numeric toxicity monitoring trigger to initiate a TRE is 1 TUc (where TUc = 100/NOEC). The monitoring trigger is not an effluent limitation; it is the toxicity threshold at which the Discharger is required to begin accelerated monitoring and initiate a TRE.

iii. **Accelerated Monitoring Specifications.** If the numeric toxicity monitoring trigger is exceeded during regular chronic toxicity testing, the Discharger shall initiate accelerated monitoring within 14-days of notification by the laboratory of the exceedance. Accelerated monitoring shall consist of four chronic toxicity tests conducted once every two weeks using the species that exhibited toxicity. The following protocol shall be used for accelerated monitoring and TRE initiation:

(a) If the results of four consecutive accelerated monitoring tests do not exceed the monitoring trigger, the Discharger may cease accelerated monitoring and resume regular chronic toxicity monitoring. However, notwithstanding the accelerated monitoring results, if there is adequate evidence of a pattern of effluent toxicity, the Executive Officer may require that the Discharger initiate a TRE.

(b) If the source(s) of the toxicity is easily identified (e.g., temporary plant upset), the Discharger shall make necessary corrections to the facility and shall continue accelerated monitoring until four consecutive accelerated tests do not exceed the monitoring trigger. Upon confirmation that the effluent toxicity has been removed, the Discharger may cease accelerated monitoring and resume regular chronic toxicity monitoring.

(c) If the result of any accelerated toxicity test exceeds the monitoring trigger, the Discharger shall cease accelerated monitoring and begin a TRE to investigate the cause(s) of, and identify corrective actions to reduce or eliminate effluent toxicity. Within thirty (30) days of notification by the laboratory of any test result exceeding the monitoring trigger during accelerated monitoring, the Discharger shall submit a TRE Action Plan to the Central Valley Water Board including, at minimum:

(1) Specific actions the Discharger will take to investigate and identify the cause(s) of toxicity, including a TRE WET monitoring schedule;

(2) Specific actions the Discharger will take to mitigate the impact of the discharge and prevent the recurrence of toxicity; and

(3) A schedule for these actions.

Within sixty (60) days of notification by the laboratory of the test results, the Discharger shall submit to the Central Valley Water Board a TRE Work Plan for approval by the Executive Officer. The TRE Work Plan shall

outline the procedures for identifying the source(s) of, and reducing or eliminating effluent toxicity. The TRE Work Plan must be developed in accordance with U.S. EPA guidance[2].

3. Best Management Practices and Pollution Prevention

a. **Pollution Prevention Plan for Mercury.** The Discharger shall continue to implement a Pollution Prevention Plan (PPP) for mercury. The Discharger shall evaluate the effectiveness of the mercury PPP and provide a summary with the Report of Waste Discharge, due 1-year prior to the permit expiration date of this Order. The summary shall include, at minimum, a summary of the effectiveness of the PPP in the reduction of mercury in the discharge, a summary of mercury and methylmercury monitoring results, and discuss any updates to the mercury PPP.

4. Construction, Operation and Maintenance Specifications

a. **Filtration System Operating Specifications.** To ensure the filtration system is operating properly to provide adequate disinfection of the Facility's tertiary treated wastewater, the turbidity of the filter effluent measured at Monitoring Locations FIL-001 and FIL-002 shall not exceed:

i. 0.2 NTU more than 5 percent of the time within a 24-hour period; and
ii. 0.5 NTU at any time.

b. **Ultraviolet Light (UV) Disinfection System Operating Specifications.** The UV disinfection system must be operated in accordance with an operations and maintenance program that assures adequate disinfection, and shall meet the following minimum specifications to provide virus inactivation equivalent to Title 22 Disinfected Tertiary Recycled Water:

i. **UV Dose.** The minimum hourly average UV dose in the UV reactor shall be 80 millijoules per square centimeter (mJ/cm^2).

ii. **UV Transmittance**. The minimum hourly average UV transmittance (at 254 nanometers) in the wastewater measured at Monitoring Locations UVS-001A and UVS-002A shall not fall below 65 percent.

iii. The lamp sleeves and cleaning system components must be visually inspected per the manufacturer's operations manual for physical wear (scoring, solarization, seal leaks, cleaning fluid levels, etc.) and to check the efficacy of the cleaning system.

iv. The lamp sleeves must be cleaned periodically as necessary to meet the UV dose requirements.

v. Lamps must be replaced per the manufacturer's operations manual, or sooner, if there are indications the lamps are failing to provide adequate disinfection. Lamp age and lamp replacement records must be maintained.

[2] See the Fact Sheet (Attachment F, section VII.B.2.a.) for a list of U.S. EPA guidance documents that must be considered in development of the TRE Work Plan.

5. Special Provisions for Publicly-Owned Treatment Works (POTW's)

a. **Pretreatment Requirements**

i. The Discharger shall be responsible and liable for the performance of all Control Authority pretreatment requirements contained in 40 C.F.R. part 403, including any subsequent regulatory revisions to 40 C.F.R. part 403. Where 40 C.F.R. part 403 or subsequent revision places mandatory actions upon the Discharger as Control Authority but does not specify a timetable for completion of the actions, the Discharger shall complete the required actions within 6 months from the issuance date of this permit or the effective date of the 40 C.F.R part 403 revisions, whichever comes later. For violations of pretreatment requirements, the Discharger shall be subject to enforcement actions, penalties, fines, and other remedies by U.S. EPA or other appropriate parties, as provided in the CWA. U.S. EPA may initiate enforcement action against a nondomestic user for noncompliance with applicable standards and requirements as provided in the CWA.

ii. The Discharger shall enforce the requirements promulgated under sections 307(b), 307(c), 307(d), and 402(b) of the CWA with timely, appropriate and effective enforcement actions. The Discharger shall cause all nondomestic users subject to federal categorical standards to achieve compliance no later than the date specified in those requirements or, in the case of a new nondomestic user, upon commencement of the discharge.

iii. The Discharger shall perform the pretreatment functions as required in 40 C.F.R. part 403 including, but not limited to:

(a) Implement the necessary legal authorities as provided in 40 C.F.R section 403.8(f)(1);

(b) Enforce the pretreatment requirements under 40 C.F.R. sections 403.5 and 403.6;

(c) Implement the programmatic functions as provided in 40 C.F.R. section 403.8(f)(2); and

(d) Provide the requisite funding and personnel to implement the pretreatment program as provided in 40 C.F.R. section 403.8(f)(3).

iv. **Pretreatment Reporting Requirements.** Pretreatment reporting requirements are included in the Monitoring and Reporting Program, section X.D.5 of Attachment E.

b. **Collection System.** The Discharger is subject to the requirements of, and must comply with, State Water Board Order 2006-0003-DWQ, Statewide General Waste Discharge Requirements for Sanitary Sewer Systems as amended by State Water Board Order WQ 2013-0058-EXEC and any subsequent Order.

c. **Resource Recovery for Anaerobically Digestible Material.** If the Discharger will receive hauled-in anaerobically digestible material for injection into an anaerobic digester, the Discharger shall notify the Central Valley Water Board and develop and implement Standard Operating Procedures for this activity. The Standard Operating Procedures shall be developed prior to receiving hauled-in anaerobically digestible material. The Standard Operating Procedures shall address material

handling, including unloading, screening, or other processing prior to anaerobic digestion; transportation; spill prevention; and spill response. In addition, the Standard Operating Procedures shall address avoidance of the introduction of materials that could cause interference, pass-through, or upset of the treatment processes; avoidance of prohibited material; vector control; odor control; operation and maintenance; and the disposition of any solid waste segregated from introduction to the digester. The Discharger shall train its staff on the Standard Operating Procedures and shall maintain records for a minimum of five years for each load received, describing the hauler, waste type, and quantity received. In addition, the Discharger shall maintain records for a minimum of five years for the disposition, location, and quantity of cumulative pre-digestion-segregated solid waste hauled off-site.

6. Other Special Provisions

a. **Title 22, or Equivalent, Disinfection Requirements.** Wastewater shall be oxidized, coagulated, filtered, and adequately disinfected pursuant to the State Water Board, Division of Drinking Water (DDW) reclamation criteria, Title 22, or equivalent.

b. **Year-Round Tertiary Discharge, Phase 3 (19.1 MGD).** The Discharger has requested to be permitted to discharge up to 19.1 MGD year-round to the San Joaquin River upon completion of the Phase 3 upgrades. The permitted discharge flow to the San Joaquin River is subject to compliance with the following conditions:

i. **Facility Improvements.** The Discharger shall have completed construction and startup of the Phase 3 upgrades with a design capacity of at least 19.1 MGD, as identified in the Fact Sheet II.E;

ii. **Design Approval.** The Discharger shall provide evidence, certified by the Plant Design Engineer, that the plant is operating properly;

iii. **Compliance with Effluent and Receiving Water Limits.** The Facility shall be in compliance with all final effluent and receiving water limits; and

iv. **Request for Flow Increase.** The Discharger shall notify the Executive Officer of its compliance with items i-iii, above. The average daily discharge flow shall not increase to 19.1 MGD until the Executive Officer verifies, in writing, compliance with Special Provisions VI.C.6.b.

7. Compliance Schedules

a. **Compliance Schedule for Final Effluent Limitations for Electrical Conductivity.** The Discharger shall comply with the following time schedule to ensure compliance with the final effluent limitations for Electrical Conductivity in Table 4:

Task	Date Due
i. Submit Method of Compliance Workplan/schedule	Complete[1]
ii. Update and Implement Pollution Prevention Plan (PPP) for Salinity[2]	Complete[1]
iii. **Method of Compliance Workplan/Schedule Update** Per Resolution R5-2017-XXXX it was clarified that POTWs may participate in a real-time salinity management program in lieu of meeting the wasteload allocations required by the Lower San Joaquin River Salt and Boron Control Program. The Discharger shall re-evaluate the method of compliance for electrical conductivity considering the feasibility of managing the Facility's discharge to the San Joaquin River in accordance with a salinity real-time management program that ensures the salinity water quality objectives are met at Vernalis. The Discharger shall submit an updated Method of Compliance Workplan/Schedule to implement a project to participate in a real-time salinity management program or otherwise comply with the final effluent limitations for electrical conductivity. This Order may be reopened to modify this compliance schedule based on the results of the evaluation.	**1 June 2018**
iv~~ii~~. **Complete construction of the North Valley Regional Recycled Water Program (NVRRWP) outfall pipeline to the Delta Mendota Canal** Provide information in the annual progress report demonstrating construction of the NVRRWP outfall pipeline has been completed.	**1 September 2019~~8~~**
~~iv. **Salinity Real-Time Management Program Feasibility Study** Submit study evaluating the feasibility of managing the Facility's discharge to the San Joaquin River in accordance with a salinity real-time management program that ensures the salinity water quality objectives are met at Vernalis.~~	~~**1 June 2018**~~
~~v. **Workplan/Schedule to Participate in Real-time Salinity Management Program** If it is determined in Task iv that it is feasible for the Discharger to participate in a real-time salinity management program, the Discharger shall submit a workplan and schedule to implement participation~~	~~**1 June 2019**~~
v~~i~~. **Annual Progress Reports**[3]	**1 September**, annually until final compliance
vi~~i~~. **Final Compliance.** Full compliance with final electrical conductivity effluent limitations or participate in a real-time salinity management program[6]	**28 July 2022**[4] **or 28 July 2026**[5]

[1] The City of Modesto Salinity Method of Compliance Work Plan was submitted on 1 June 2009, and submitted an updated PPP for salinity on 21 December 2012.

[2] The Discharger shall submit and implement a PPP for salinity in accordance with CWC Section 13263.3(d)(3).

[3] The progress reports shall detail what steps have been implemented towards achieving compliance with waste discharge requirements, including studies, construction progress, evaluation of measures implemented, and recommendations for additional measures as necessary to achieve full compliance by the final date.

[4] For all water year types, except critically dry.

[5] For critically dry years, full compliance not required until 28 July 2026.

[6] Per the amendment to the Basin Plan for control of salt and boron discharges into Lower San Joaquin River approved by the Central Valley Water Board in Resolution R5-2017-XXXX, it was clarified that POTWs may participate in a real-time salinity management program in lieu of meeting the wasteload allocations.

VII. COMPLIANCE DETERMINATION

A. BOD_5 and TSS Effluent Limitations (Sections IV.A.1.a and IV.A.1.b). Compliance with the final effluent limitations for BOD_5 and TSS required in section IV.A.1.a shall be ascertained by 24-hour composite samples. Compliance with effluent limitations required in sections IV.A.1.b for percent removal shall be calculated using the arithmetic mean of BOD_5 and TSS in effluent samples collected over a monthly period as a percentage of the arithmetic mean of the values for influent samples collected at approximately the same times during the same period.

B. Total Mercury Mass Loading Effluent Limitations (Section IV.A.1.h). The procedures for calculating mass loadings are as follows:

1. The total pollutant mass load for each individual calendar month shall be determined using an average of all concentration data collected that month and the corresponding total monthly flow. All effluent monitoring data collected under the Monitoring and Reporting Program, pretreatment program, and any special studies shall be used for these calculations. The total annual mass loading shall be the sum of the individual calendar months.

2. In calculating compliance, the Discharger shall count all non-detect (ND) measures at one-half of the method detection level (MDL). If compliance with the effluent limitation is not attained due to the non-detect contribution, the Discharger shall improve and implement available analytical capabilities and compliance shall be evaluated with consideration of the detection limits.

C. Average Dry Weather Flow Effluent Limitations (Section IV.A.1.e). The average dry weather discharge flow represents the daily average flow when groundwater is at or near normal and runoff is not occurring. Compliance with the average dry weather flow effluent limitations will be determined annually based on the average daily flow over three consecutive dry weather months (e.g., July, August, and September).

D. Total Coliform Organisms Effluent Limitations (Sections IV.A.1.d). For each day that an effluent sample is collected and analyzed for total coliform organisms, the 7-day median shall be determined by calculating the median concentration of total coliform bacteria in the effluent utilizing the bacteriological results of the last 7 days. For example, if a sample is collected on a Wednesday, the result from that sampling event and all results from the previous 6 days (i.e., Tuesday, Monday, Sunday, Saturday, Friday, and Thursday) are used to calculate the

7-day median. If the 7-day median of total coliform organisms exceeds a MPN of 2.2 per 100 milliliters, the Discharger will be considered out of compliance.

E. Mass Effluent Limitations. The mass effluent limitations contained in the Final Effluent Limitations IV.A.1.a are based on the permitted average daily discharge flow and calculated as follows:

Mass (lbs/day) = Flow (MGD) x Concentration (mg/L) x 8.34 (conversion factor)

When calculating daily mass loading, the daily average flow and constituent concentration shall be used. For weekly average mass loading, the weekly average flow and constituent concentration shall be used. For monthly average mass loading, the monthly average flow and constituent concentration shall be used.

F. Priority Pollutant Effluent Limitations. Compliance with effluent limitations for priority pollutants shall be determined in accordance with section 2.4.5 of the SIP, as follows:

1. Dischargers shall be deemed out of compliance with an effluent limitation if the concentration of the priority pollutant in the monitoring sample is greater than the effluent limitation and greater than or equal to the reporting level (RL).
2. Dischargers shall be required to conduct a Pollutant Minimization Program (PMP) in accordance with section 2.4.5.1 of the SIP when there is evidence that the priority pollutant is present in the effluent above an effluent limitation and either:
   a. A sample result is reported as detected, but not quantified (DNQ) and the effluent limitation is less than the RL; or
   b. A sample result is reported as ND and the effluent limitation is less than the MDL.
3. When determining compliance with an average monthly effluent limitation (AMEL) and more than one sample result is available in a month, the Discharger shall compute the arithmetic mean unless the data set contains one or more reported determinations of DNQ or ND. In those cases, the discharger shall compute the median in place of the arithmetic mean in accordance with the following procedure:
   a. The data set shall be ranked from low to high, reported ND determinations lowest, DNQ determinations next, followed by quantified values (if any). The order of the individual ND or DNQ determinations is unimportant.
   b. The median value of the data set shall be determined. If the data set has an odd number of data points, then the median is the middle value. If the data set has an even number of data points, then the median is the average of the two values around the middle unless one or both of the points are ND or DNQ, in which case the median value shall be the lower of the two data points where DNQ is lower than a value and ND is lower than DNQ.
4. If a sample result, or the arithmetic mean or median of multiple sample results, is below the RL, and there is evidence that the priority pollutant is present in the effluent above an effluent limitation and the discharger conducts a PMP (as described in section 2.4.5.1 of the SIP), the discharger shall <u>not</u> be deemed out of compliance.

G. Dissolved Oxygen Receiving Water Limitation (Section V.A.5.a-c). The Facility provides a high level of treatment including tertiary filtration and nitrification, which results in minimal dissolved oxygen impacts in the receiving water. Weekly dissolved oxygen receiving water monitoring is required in the Monitoring and Reporting Program (Attachment E) and is sufficient to evaluate the impacts of the discharge and compliance with this Order. Weekly

receiving water monitoring data, measured at Monitoring Locations RSW-001 and RSW-002 will be used to determine compliance with part “c” of the dissolved oxygen receiving water limitation to ensure the discharge does not cause the dissolved oxygen concentrations in the San Joaquin River to be reduced below 7.0 mg/L at any time. However, should more frequent dissolved oxygen and temperature receiving water monitoring be conducted, Central Valley Water Board staff may evaluate compliance with parts “a” and “b”.

H. Turbidity Receiving Water Limitations (Section V.A.17.a-e). Compliance with the turbidity receiving water limitations will be determined based on the change in turbidity measured at Monitoring Location RSW-001 as compared to the downstream at Monitoring Location RSW-002.

I. Chlorpyrifos and Diazinon Effluent Limitations (Sections IV.A.1.f). Compliance shall be determined by calculating the sum (S), as provided in this Order, with analytical results that are reported as ND concentrations to be considered to be zero.

ATTACHMENT A – DEFINITIONS

Arithmetic Mean (μ)
Also called the average, is the sum of measured values divided by the number of samples. For ambient water concentrations, the arithmetic mean is calculated as follows:

Arithmetic mean = $\mu = \Sigma x / n$ where: Σx is the sum of the measured ambient water concentrations, and n is the number of samples.

Average Monthly Effluent Limitation (AMEL)
The highest allowable average of daily discharges over a calendar month, calculated as the sum of all daily discharges measured during a calendar month divided by the number of daily discharges measured during that month.

Average Weekly Effluent Limitation (AWEL)
The highest allowable average of daily discharges over a calendar week (Sunday through Saturday), calculated as the sum of all daily discharges measured during a calendar week divided by the number of daily discharges measured during that week.

Bioaccumulative
Those substances taken up by an organism from its surrounding medium through gill membranes, epithelial tissue, or from food and subsequently concentrated and retained in the body of the organism.

Carcinogenic
Pollutants are substances that are known to cause cancer in living organisms.

Coefficient of Variation (CV)
CV is a measure of the data variability and is calculated as the estimated standard deviation divided by the arithmetic mean of the observed values.

Daily Discharge
Daily Discharge is defined as either: (1) the total mass of the constituent discharged over the calendar day (12:00 am through 11:59 pm) or any 24-hour period that reasonably represents a calendar day for purposes of sampling (as specified in the permit), for a constituent with limitations expressed in units of mass or; (2) the unweighted arithmetic mean measurement of the constituent over the day for a constituent with limitations expressed in other units of measurement (e.g., concentration).

The daily discharge may be determined by the analytical results of a composite sample taken over the course of one day (a calendar day or other 24-hour period defined as a day) or by the arithmetic mean of analytical results from one or more grab samples taken over the course of the day.

For composite sampling, if 1 day is defined as a 24-hour period other than a calendar day, the analytical result for the 24-hour period will be considered as the result for the calendar day in which the 24-hour period ends.

Detected, but Not Quantified (DNQ)
DNQ are those sample results less than the RL, but greater than or equal to the laboratory's MDL. Sample results reported as DNQ are estimated concentrations.

Dilution Credit
Dilution Credit is the amount of dilution granted to a discharge in the calculation of a water quality-based effluent limitation, based on the allowance of a specified mixing zone. It is calculated from the

dilution ratio or determined through conducting a mixing zone study or modeling of the discharge and receiving water.

Effluent Concentration Allowance (ECA)
ECA is a value derived from the water quality criterion/objective, dilution credit, and ambient background concentration that is used, in conjunction with the coefficient of variation for the effluent monitoring data, to calculate a long-term average (LTA) discharge concentration. The ECA has the same meaning as waste load allocation (WLA) as used in U.S. EPA guidance (Technical Support Document For Water Quality-based Toxics Control, March 1991, second printing, EPA/505/2-90-001).

Enclosed Bays
Enclosed Bays means indentations along the coast that enclose an area of oceanic water within distinct headlands or harbor works. Enclosed bays include all bays where the narrowest distance between the headlands or outermost harbor works is less than 75 percent of the greatest dimension of the enclosed portion of the bay. Enclosed bays include, but are not limited to, Humboldt Bay, Bodega Harbor, Tomales Bay, Drake's Estero, San Francisco Bay, Morro Bay, Los Angeles-Long Beach Harbor, Upper and Lower Newport Bay, Mission Bay, and San Diego Bay. Enclosed bays do not include inland surface waters or ocean waters.

Estimated Chemical Concentration
The estimated chemical concentration that results from the confirmed detection of the substance by the analytical method below the ML value.

Estuaries
Estuaries means waters, including coastal lagoons, located at the mouths of streams that serve as areas of mixing for fresh and ocean waters. Coastal lagoons and mouths of streams that are temporarily separated from the ocean by sandbars shall be considered estuaries. Estuarine waters shall be considered to extend from a bay or the open ocean to a point upstream where there is no significant mixing of fresh water and seawater. Estuarine waters included, but are not limited to, the Sacramento-San Joaquin Delta, as defined in Water Code section 12220, Suisun Bay, Carquinez Strait downstream to the Carquinez Bridge, and appropriate areas of the Smith, Mad, Eel, Noyo, Russian, Klamath, San Diego, and Otay rivers. Estuaries do not include inland surface waters or ocean waters.

Inland Surface Waters
All surface waters of the state that do not include the ocean, enclosed bays, or estuaries.

Instantaneous Maximum Effluent Limitation
The highest allowable value for any single grab sample or aliquot (i.e., each grab sample or aliquot is independently compared to the instantaneous maximum limitation).

Instantaneous Minimum Effluent Limitation
The lowest allowable value for any single grab sample or aliquot (i.e., each grab sample or aliquot is independently compared to the instantaneous minimum limitation).

Maximum Daily Effluent Limitation (MDEL)
The highest allowable daily discharge of a pollutant, over a calendar day (or 24-hour period). For pollutants with limitations expressed in units of mass, the daily discharge is calculated as the total mass of the pollutant discharged over the day. For pollutants with limitations expressed in other units of measurement, the daily discharge is calculated as the arithmetic mean measurement of the pollutant over the day.

Median
The middle measurement in a set of data. The median of a set of data is found by first arranging the measurements in order of magnitude (either increasing or decreasing order). If the number of measurements (n) is odd, then the median = $X_{(n+1)/2}$. If n is even, then the median = $(X_{n/2} + X_{(n/2)+1})/2$ (i.e., the midpoint between the n/2 and n/2+1).

Method Detection Limit (MDL)
MDL is the minimum concentration of a substance that can be measured and reported with 99 percent confidence that the analyte concentration is greater than zero, as defined in in 40 C.F.R. part 136, Attachment B, revised as of July 3, 1999.

Minimum Level (ML)
ML is the concentration at which the entire analytical system must give a recognizable signal and acceptable calibration point. The ML is the concentration in a sample that is equivalent to the concentration of the lowest calibration standard analyzed by a specific analytical procedure, assuming that all the method specified sample weights, volumes, and processing steps have been followed.

Mixing Zone
Mixing Zone is a limited volume of receiving water that is allocated for mixing with a wastewater discharge where water quality criteria can be exceeded without causing adverse effects to the overall water body.

Not Detected (ND)
Sample results which are less than the laboratory's MDL.

Ocean Waters
The territorial marine waters of the State as defined by California law to the extent these waters are outside of enclosed bays, estuaries, and coastal lagoons. Discharges to ocean waters are regulated in accordance with the State Water Board's California Ocean Plan.

Persistent Pollutants
Persistent pollutants are substances for which degradation or decomposition in the environment is nonexistent or very slow.

Pollutant Minimization Program (PMP)
PMP means waste minimization and pollution prevention actions that include, but are not limited to, product substitution, waste stream recycling, alternative waste management methods, and education of the public and businesses. The goal of the PMP shall be to reduce all potential sources of a priority pollutant(s) through pollutant minimization (control) strategies, including pollution prevention measures as appropriate, to maintain the effluent concentration at or below the water quality-based effluent limitation. Pollution prevention measures may be particularly appropriate for persistent bioaccumulative priority pollutants where there is evidence that beneficial uses are being impacted. The Central Valley Water Board may consider cost effectiveness when establishing the requirements of a PMP. The completion and implementation of a Pollution Prevention Plan, if required pursuant to Water Code section 13263.3(d), shall be considered to fulfill the PMP requirements.

Pollution Prevention
Pollution Prevention means any action that causes a net reduction in the use or generation of a hazardous substance or other pollutant that is discharged into water and includes, but is not limited to, input change, operational improvement, production process change, and product reformulation (as

defined in Water Code section 13263.3). Pollution prevention does not include actions that merely shift a pollutant in wastewater from one environmental medium to another environmental medium, unless clear environmental benefits of such an approach are identified to the satisfaction of the State Water Resources Control Board (State Water Board) or Central Valley Water Board.

Satellite Collection System
The portion, if any, of a sanitary sewer system owned or operated by a different public agency than the agency that owns and operates the wastewater treatment facility that a sanitary sewer system is tributary to.

Source of Drinking Water
Any water designated as municipal or domestic supply (MUN) in a Central Valley Water Board Basin Plan.

Standard Deviation (σ)
Standard Deviation is a measure of variability that is calculated as follows:

$$\sigma = (\sum[(x - \mu)^2]/(n - 1))^{0.5}$$

where:
x is the observed value;
μ is the arithmetic mean of the observed values; and
n is the number of samples.

Toxicity Reduction Evaluation (TRE)
TRE is a study conducted in a step-wise process designed to identify the causative agents of effluent or ambient toxicity, isolate the sources of toxicity, evaluate the effectiveness of toxicity control options, and then confirm the reduction in toxicity. The first steps of the TRE consist of the collection of data relevant to the toxicity, including additional toxicity testing, and an evaluation of facility operations and maintenance practices, and best management practices. A Toxicity Identification Evaluation (TIE) may be required as part of the TRE, if appropriate. (A TIE is a set of procedures to identify the specific chemical(s) responsible for toxicity. These procedures are performed in three phases (characterization, identification, and confirmation) using aquatic organism toxicity tests.)

ATTACHMENT B – MAP

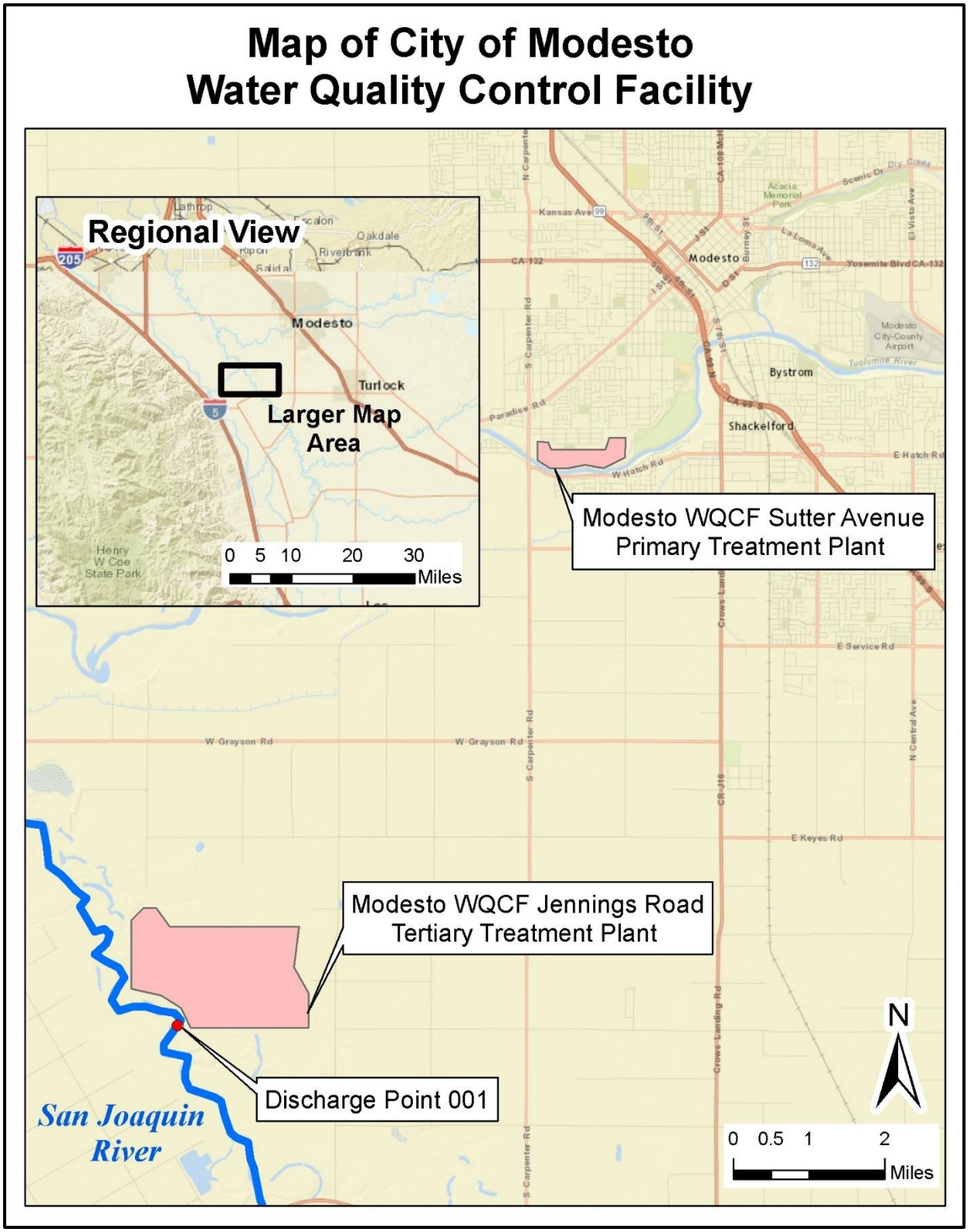

ATTACHMENT C – FLOW SCHEMATIC

Figure C-1. City of Modesto WQCF Primary Treatment Schematic

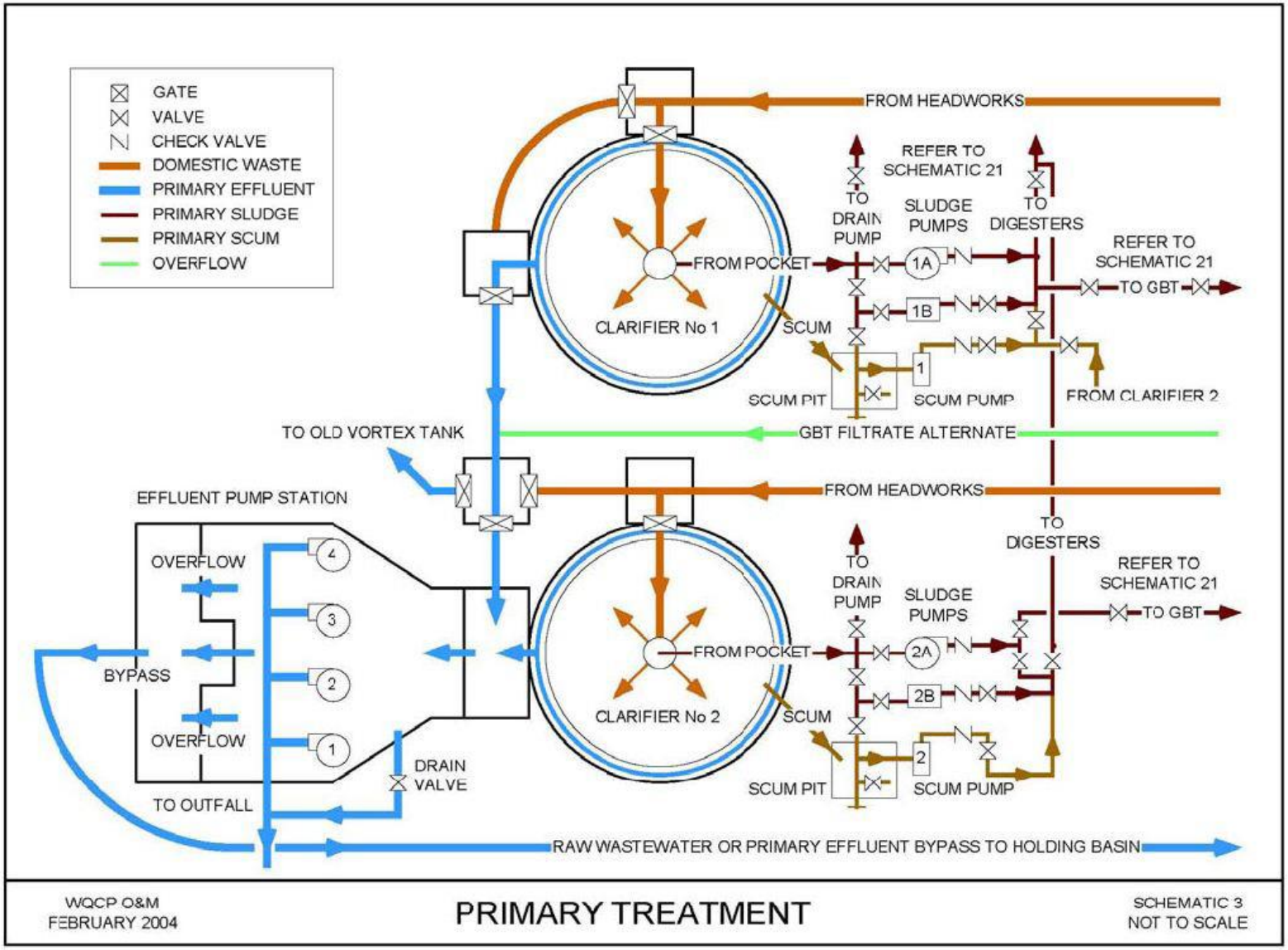

Figure C-2. City of Modesto WQCF Secondary Treatment Schematic

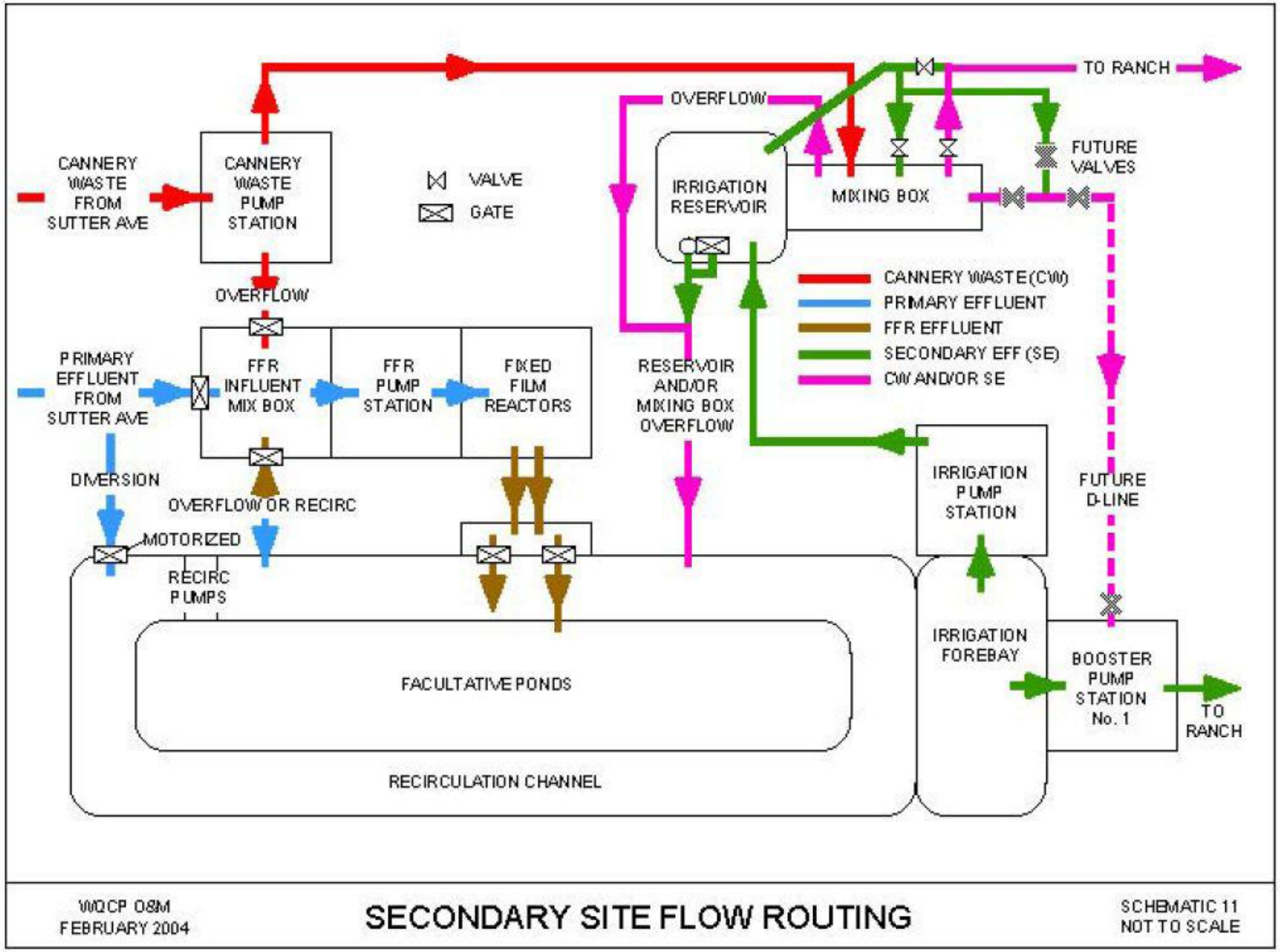
TO RANCH
OVERFLOW
CANNERY WASTE FROM SUTTER AVE
CANNERY WASTE PUMP STATION
VALVE
GATE
IRRIGATION RESERVOIR
MIXING BOX
FUTURE VALVES
OVERFLOW
CANNERY WASTE (CW)
PRIMARY EFFLUENT
FFR EFFLUENT
SECONDARY EFF (SE)
CW AND/OR SE
PRIMARY EFFLUENT FROM SUTTER AVE
FFR INFLUENT MIX BOX
FFR PUMP STATION
FIXED FILM REACTORS
RESERVOIR AND/OR MIXING BOX OVERFLOW
DIVERSION
OVERFLOW OR RECIRC
MOTORIZED
RECIRC PUMPS
IRRIGATION PUMP STATION
FUTURE D-LINE
FACULTATIVE PONDS
IRRIGATION FOREBAY
BOOSTER PUMP STATION No. 1
TO RANCH
RECIRCULATION CHANNEL
WQCP O&M
FEBRUARY 2004
SECONDARY SITE FLOW ROUTING
SCHEMATIC 11
NOT TO SCALE

Figure C-3. City of Modesto WQCF Parallel Outfall Lines

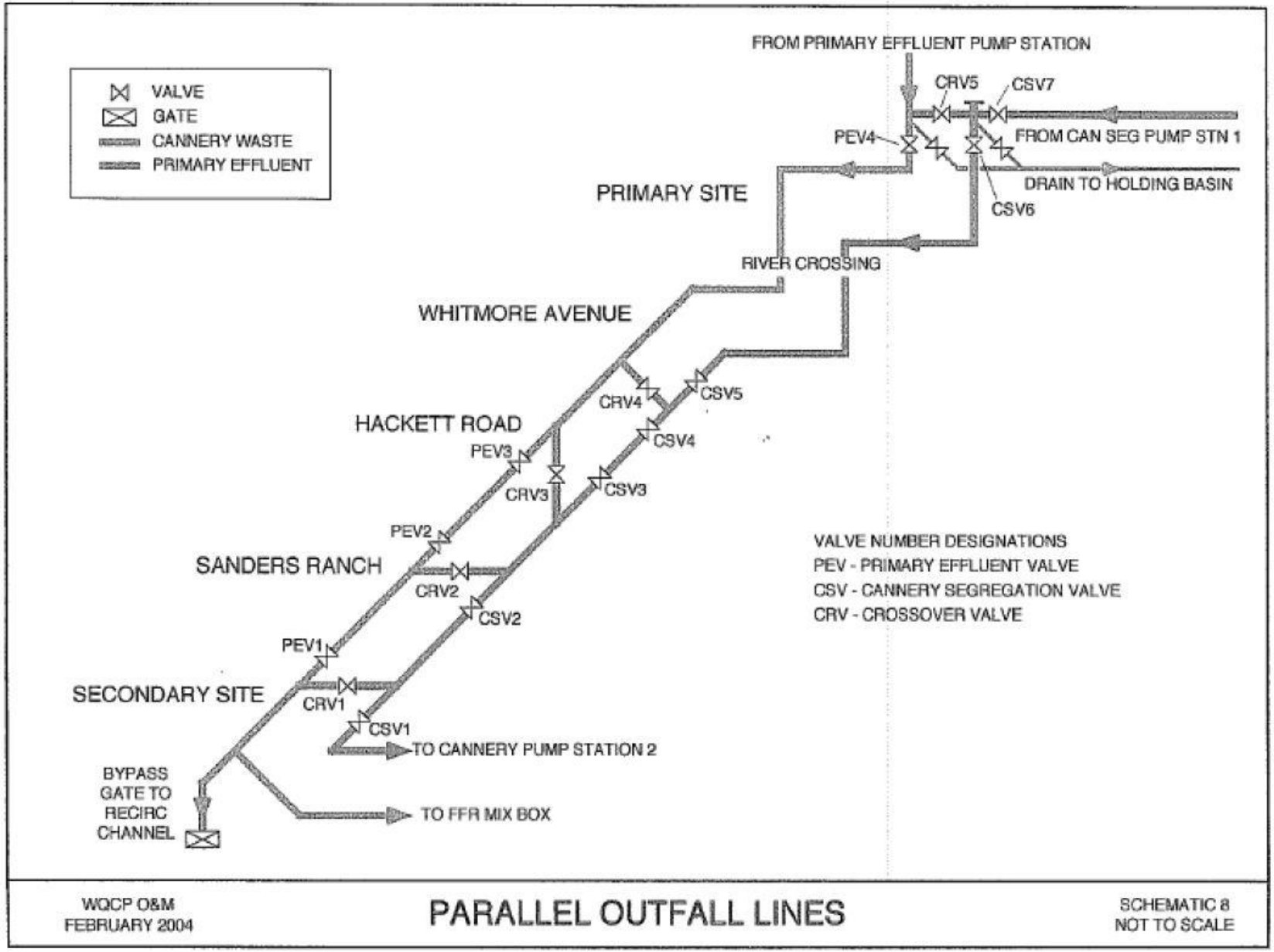
VALVE
GATE
CANNERY WASTE
PRIMARY EFFLUENT
FROM PRIMARY EFFLUENT PUMP STATION
CRV5
CSV7
PEV4
FROM CAN SEG PUMP STN 1
DRAIN TO HOLDING BASIN
CSV6
PRIMARY SITE
RIVER CROSSING
WHITMORE AVENUE
CRV4
CSV5
HACKETT ROAD
CSV4
PEV3
CRV3
CSV3
PEV2
SANDERS RANCH
CRV2
CSV2
PEV1
SECONDARY SITE
CRV1
CSV1
TO CANNERY PUMP STATION 2
BYPASS GATE TO RECIRC CHANNEL
TO FFR MIX BOX
VALVE NUMBER DESIGNATIONS
PEV - PRIMARY EFFLUENT VALVE
CSV - CANNERY SEGREGATION VALVE
CRV - CROSSOVER VALVE
WQCP O&M
FEBRUARY 2004
PARALLEL OUTFALL LINES
SCHEMATIC 8
NOT TO SCALE

Figure C-4. City of Modesto WQCF Phase 2/BNR – Tertiary Treatment Facility

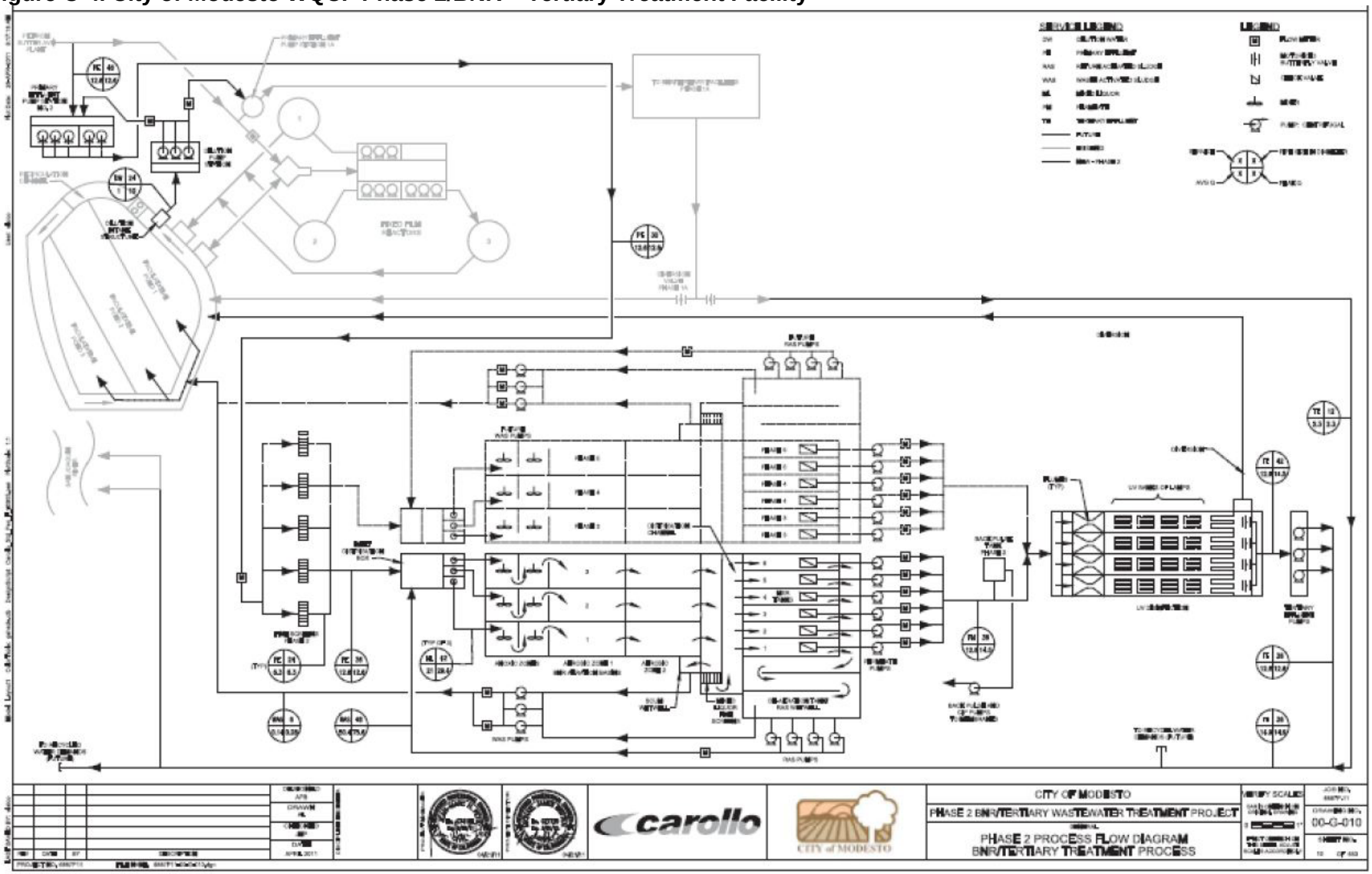

Figure C-5. City of Modesto WQCF Process Flow Diagram

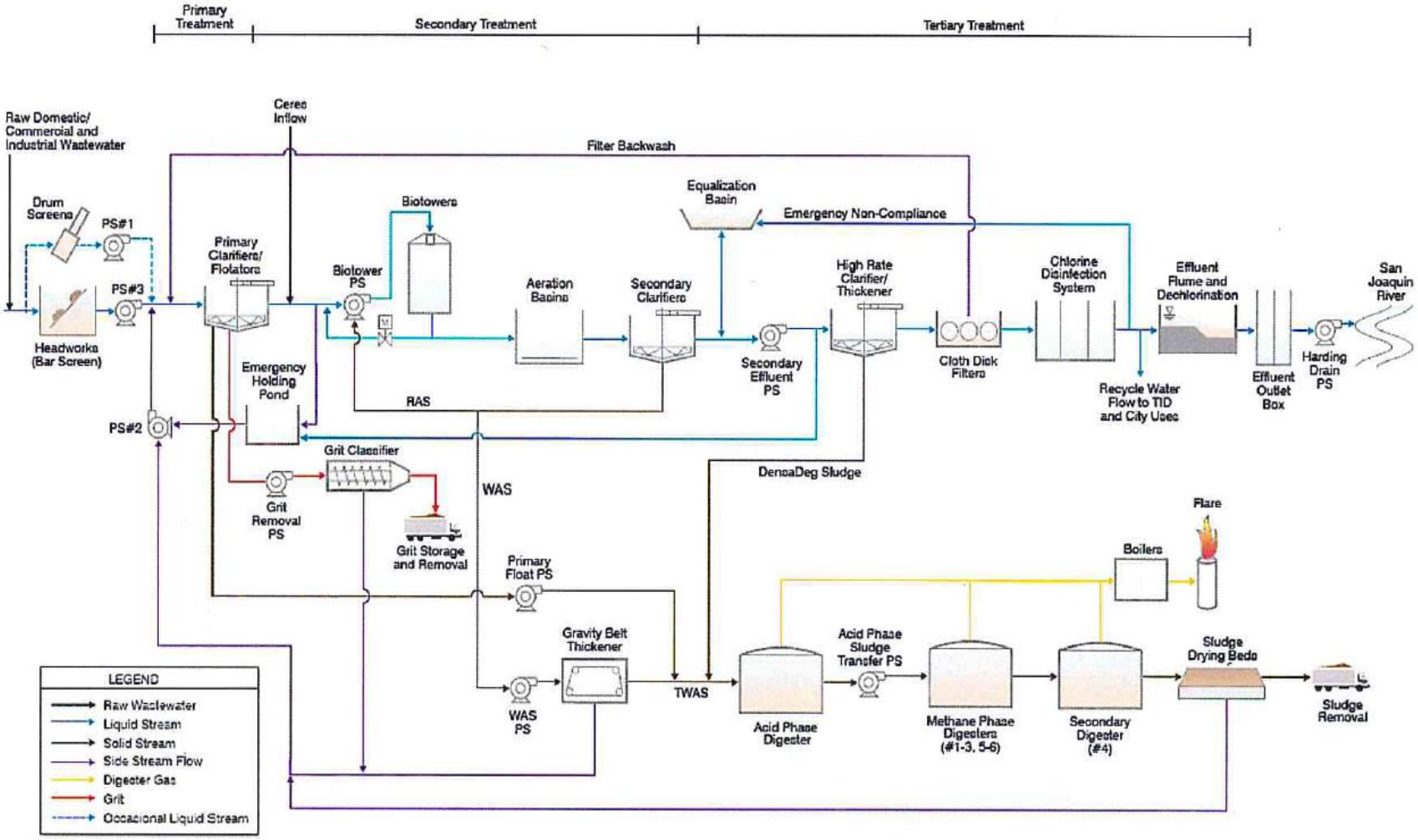

ATTACHMENT D – STANDARD PROVISIONS

I. STANDARD PROVISIONS – PERMIT COMPLIANCE

A. Duty to Comply

1. The Discharger must comply with all of the terms, requirements, and conditions of this Order. Any noncompliance constitutes a violation of the Clean Water Act (CWA) and the California Water Code and is grounds for enforcement action; permit termination, revocation and reissuance, or modification; denial of a permit renewal application; or a combination thereof. (40 C.F.R. § 122.41(a); Wat. Code, §§ 13261, 13263, 13265, 13268, 13000, 13001, 13304, 13350, 13385)

2. The Discharger shall comply with effluent standards or prohibitions established under section 307(a) of the CWA for toxic pollutants and with standards for sewage sludge use or disposal established under section 405(d) of the CWA within the time provided in the regulations that establish these standards or prohibitions, even if this Order has not yet been modified to incorporate the requirement. (40 C.F.R. § 122.41(a)(1))

B. Need to Halt or Reduce Activity Not a Defense

It shall not be a defense for a Discharger in an enforcement action that it would have been necessary to halt or reduce the permitted activity in order to maintain compliance with the conditions of this Order. (40 C.F.R. § 122.41(c))

C. Duty to Mitigate

The Discharger shall take all reasonable steps to minimize or prevent any discharge or sludge use or disposal in violation of this Order that has a reasonable likelihood of adversely affecting human health or the environment. (40 C.F.R. § 122.41(d))

D. Proper Operation and Maintenance

The Discharger shall, at all times, properly operate and maintain all facilities and systems of treatment and control (and related appurtenances) which are installed or used by the Discharger to achieve compliance with the conditions of this Order. Proper operation and maintenance also includes adequate laboratory controls and appropriate quality assurance procedures. This provision requires the operation of backup or auxiliary facilities or similar systems that are installed by a Discharger only when necessary to achieve compliance with the conditions of this Order. (40 C.F.R. § 122.41(e))

E. Property Rights

1. This Order does not convey any property rights of any sort or any exclusive privileges. (40 C.F.R. § 122.41(g))

2. The issuance of this Order does not authorize any injury to persons or property or invasion of other private rights, or any infringement of state or local law or regulations. (40 C.F.R. § 122.5(c))

F. Inspection and Entry

The Discharger shall allow the Central Valley Water Board, State Water Board, U.S. EPA, and/or their authorized representatives (including an authorized contractor acting as their representative), upon the presentation of credentials and other documents, as may be required by law, to (33 U.S.C. § 1318(a)(4)(B); 40 C.F.R. § 122.41(i); Wat. Code, § 13267, 13383):

1. Enter upon the Discharger's premises where a regulated facility or activity is located or conducted, or where records are kept under the conditions of this Order (33 U.S.C § 1318(a)(4)(B)(ii); 40 C.F.R. § 122.41(i)(1); Wat. Code, §§ 13267, 13383);
2. Have access to and copy, at reasonable times, any records that must be kept under the conditions of this Order (33 U.S.C. § 1318(a)(4)(B)(ii); 40 C.F.R. § 122.41(i)(2); Wat. Code, §§ 13267, 13383);
3. Inspect and photograph, at reasonable times, any facilities, equipment (including monitoring and control equipment), practices, or operations regulated or required under this Order (33 U.S.C § 1318(a)(4)(B)(ii); 40 C.F.R. § 122.41(i)(3); Wat. Code, § 13267, 13383); and
4. Sample or monitor, at reasonable times, for the purposes of assuring Order compliance or as otherwise authorized by the CWA or the Water Code, any substances or parameters at any location. (33 U.S.C § 1318(a)(4)(B); 40 C.F.R. § 122.41(i)(4); Wat. Code, §§ 13267, 13383)

G. Bypass

1. Definitions
   a. "Bypass" means the intentional diversion of waste streams from any portion of a treatment facility. (40 C.F.R. § 122.41(m)(1)(i))
   b. "Severe property damage" means substantial physical damage to property, damage to the treatment facilities, which causes them to become inoperable, or substantial and permanent loss of natural resources that can reasonably be expected to occur in the absence of a bypass. Severe property damage does not mean economic loss caused by delays in production. (40 C.F.R. § 122.41(m)(1)(ii))
2. Bypass not exceeding limitations. The Discharger may allow any bypass to occur which does not cause exceedances of effluent limitations, but only if it is for essential maintenance to assure efficient operation. These bypasses are not subject to the provisions listed in Standard Provisions – Permit Compliance I.G.3, I.G.4, and I.G.5 below. (40 C.F.R. § 122.41(m)(2))
3. Prohibition of bypass. Bypass is prohibited, and the Central Valley Water Board may take enforcement action against a Discharger for bypass, unless (40 C.F.R. § 122.41(m)(4)(i)):
   a. Bypass was unavoidable to prevent loss of life, personal injury, or severe property damage (40 C.F.R. § 122.41(m)(4)(i)(A));
   b. There were no feasible alternatives to the bypass, such as the use of auxiliary treatment facilities, retention of untreated wastes, or maintenance during normal periods of equipment downtime. This condition is not satisfied if adequate back-up equipment should have been installed in the exercise of reasonable engineering judgment to prevent a bypass that occurred during normal periods of equipment downtime or preventive maintenance (40 C.F.R. § 122.41(m)(4)(i)(B)); and
   c. The Discharger submitted notice to the Central Valley Water Board as required under Standard Provisions – Permit Compliance I.G.5 below. (40 C.F.R. § 122.41(m)(4)(i)(C))
4. The Central Valley Water Board may approve an anticipated bypass, after considering its adverse effects, if the Central Valley Water Board determines that it will meet the three

conditions listed in Standard Provisions – Permit Compliance I.G.3 above. (40 C.F.R. § 122.41(m)(4)(ii))

5. Notice

   a. Anticipated bypass. If the Discharger knows in advance of the need for a bypass, it shall submit prior notice, if possible at least 10 days before the date of the bypass. The notice shall be sent to the Central Valley Water Board. As of 21 December 2020, all notices shall be submitted electronically to the initial recipient (State Water Board), defined in Standard Provisions – Reporting V.J below. Notices shall comply with 40 C.F.R part 3, section 122.22 and 40 C.F.R. part 127. (40 C.F.R. § 122.41(m)(3)(i))

   b. Unanticipated bypass. The Discharger shall submit notice of an unanticipated bypass as required in Standard Provisions - Reporting V.E below (24-hour notice). The notice shall be sent to the Central Valley Water Board. As of 21 December 2020, all notices shall be submitted electronically to the initial recipient (State Water Board), defined in Standard Provisions – Reporting V.J below. Notices shall comply with 40 C.F.R. part 3, section 122.22 and 40 C.F.R part 127. (40 C.F.R. § 122.41(m)(3)(ii))

H. Upset

Upset means an exceptional incident in which there is unintentional and temporary noncompliance with technology based permit effluent limitations because of factors beyond the reasonable control of the Discharger. An upset does not include noncompliance to the extent caused by operational error, improperly designed treatment facilities, inadequate treatment facilities, lack of preventive maintenance, or careless or improper operation. (40 C.F.R. § 122.41(n)(1))

1. Effect of an upset. An upset constitutes an affirmative defense to an action brought for noncompliance with such technology based permit effluent limitations if the requirements of Standard Provisions – Permit Compliance I.H.2 below are met. No determination made during administrative review of claims that noncompliance was caused by upset, and before an action for noncompliance, is final administrative action subject to judicial review. (40 C.F.R. § 122.41(n)(2))

2. Conditions necessary for a demonstration of upset. A Discharger who wishes to establish the affirmative defense of upset shall demonstrate, through properly signed, contemporaneous operating logs or other relevant evidence that (40 C.F.R. § 122.41(n)(3)):

   a. An upset occurred and that the Discharger can identify the cause(s) of the upset (40 C.F.R. § 122.41(n)(3)(i));

   b. The permitted facility was, at the time, being properly operated (40 C.F.R. § 122.41(n)(3)(ii));

   c. The Discharger submitted notice of the upset as required in Standard Provisions – Reporting V.E.2.b below (24-hour notice) (40 C.F.R. § 122.41(n)(3)(iii)); and

   d. The Discharger complied with any remedial measures required under Standard Provisions – Permit Compliance I.C above. (40 C.F.R. § 122.41(n)(3)(iv))

3. Burden of proof. In any enforcement proceeding, the Discharger seeking to establish the occurrence of an upset has the burden of proof. (40 C.F.R. § 122.41(n)(4))

II. STANDARD PROVISIONS – PERMIT ACTION

A. General

This Order may be modified, revoked and reissued, or terminated for cause. The filing of a request by the Discharger for modification, revocation and reissuance, or termination, or a notification of planned changes or anticipated noncompliance does not stay any Order condition. (40 C.F.R. § 122.41(f))

B. Duty to Reapply

If the Discharger wishes to continue an activity regulated by this Order after the expiration date of this Order, the Discharger must apply for and obtain a new permit. (40 C.F.R. § 122.41(b))

C. Transfers

This Order is not transferable to any person except after notice to the Central Valley Water Board. The Central Valley Water Board may require modification or revocation and reissuance of the Order to change the name of the Discharger and incorporate such other requirements as may be necessary under the CWA and the Water Code. (40 C.F.R. § 122.41(l)(3); 122.61)

III. STANDARD PROVISIONS – MONITORING

A. Samples and measurements taken for the purpose of monitoring shall be representative of the monitored activity. (40 C.F.R. § 122.41(j)(1))

B. Monitoring must be conducted according to test procedures approved under 40 C.F.R. part 136 for the analyses of pollutants unless another method is required under 40 C.F.R. subchapters N or O. Monitoring must be conducted according to sufficiently sensitive test methods approved under 40 C.F.R. chapter 1, subchapter N or O. For the purposes of this paragraph, a method is sufficiently sensitive when the method has the lowest method minimum level (ML) of the analytical methods approved under 40 C.F.R. part 136 or required under 40 C.F.R chapter 1, subchapter N or O for the measured pollutant or pollutant parameter, or when

1. The method ML is at or below the level of the most stringent effluent limitation established in the permit for the measured pollutant or pollutant parameter, and:

    a. The method ML is at or below the level of the most stringent applicable water quality criterion for the measured pollutant or pollutant parameter, or,

    b. The method ML is above the applicable water quality criterion but the amount of the pollutant or pollutant parameter in the Facility's discharge is high enough that the method detects and quantifies the level of the pollutant or pollutant parameter in the discharge.

In the case of pollutants or pollutant parameters for which there are no approved methods under 40 C.F.R. part 136 or otherwise required under 40 C.F.R., chapter 1, subchapters N or O, monitoring must be conducted according to a test procedure specified in this Order for such pollutants or pollutant parameters. (40 C.F.R. § 122.21(e)(3), 122.41(j)(4); 122.44(i)(1)(iv))

IV. STANDARD PROVISIONS – RECORDS

A. Except for records of monitoring information required by this Order related to the Discharger's sewage sludge use and disposal activities, which shall be retained for a period of at least five

years (or longer as required by 40 C.F.R. part 503), the Discharger shall retain records of all monitoring information, including all calibration and maintenance records and all original strip chart recordings for continuous monitoring instrumentation, copies of all reports required by this Order, and records of all data used to complete the application for this Order, for a period of at least three (3) years from the date of the sample, measurement, report or application. This period may be extended by request of the Central Valley Water Board Executive Officer at any time. (40 C.F.R. § 122.41(j)(2))

B. Records of monitoring information shall include:

1. The date, exact place, and time of sampling or measurements (40 C.F.R. § 122.41(j)(3)(i));
2. The individual(s) who performed the sampling or measurements (40 C.F.R. § 122.41(j)(3)(ii));
3. The date(s) analyses were performed (40 C.F.R. § 122.41(j)(3)(iii));
4. The individual(s) who performed the analyses (40 C.F.R. § 122.41(j)(3)(iv));
5. The analytical techniques or methods used (40 C.F.R. § 122.41(j)(3)(v)); and
6. The results of such analyses. (40 C.F.R. § 122.41(j)(3)(vi))

C. Claims of confidentiality for the following information will be denied (40 C.F.R. § 122.7(b)):

1. The name and address of any permit applicant or Discharger (40 C.F.R. § 122.7(b)(1)); and
2. Permit applications and attachments, permits and effluent data. (40 C.F.R. § 122.7(b)(2))

V. STANDARD PROVISIONS – REPORTING

A. Duty to Provide Information

The Discharger shall furnish to the Central Valley Water Board, State Water Board, or U.S. EPA within a reasonable time, any information which the Central Valley Water Board, State Water Board, or U.S. EPA may request to determine whether cause exists for modifying, revoking and reissuing, or terminating this Order or to determine compliance with this Order. Upon request, the Discharger shall also furnish to the Central Valley Water Board, State Water Board, or U.S. EPA copies of records required to be kept by this Order. (40 C.F.R. § 122.41(h); Wat. Code, §§ 13267, 13383)

B. Signatory and Certification Requirements

1. All applications, reports, or information submitted to the Central Valley Water Board, State Water Board, and/or U.S. EPA shall be signed and certified in accordance with Standard Provisions – Reporting V.B.2, V.B.3, V.B.4, V.B.5, and V.B.6 below. (40 C.F.R. § 122.41(k))
2. All permit applications shall be signed by either a principal executive officer or ranking elected official. For purposes of this provision, a principal executive officer of a federal agency includes: (i) the Chief Executive Officer of the agency, or (ii) a Senior Executive Officer having responsibility for the overall operations of a principal geographic unit of the agency (e.g., Regional Administrators of U.S. EPA). (40 C.F.R. § 122.22(a)(3))
3. All reports required by this Order and other information requested by the Central Valley Water Board, State Water Board, or U.S. EPA shall be signed by a person described in

Standard Provisions – Reporting V.B.2 above, or by a duly authorized representative of that person. A person is a duly authorized representative only if:

a. The authorization is made in writing by a person described in Standard Provisions – Reporting V.B.2 above (40 C.F.R. § 122.22(b)(1));

b. The authorization specifies either an individual or a position having responsibility for the overall operation of the regulated facility or activity such as the position of Plant Manager, Operator of a well or a well field, Superintendent, position of equivalent responsibility, or an individual or position having overall responsibility for environmental matters for the company. (A duly authorized representative may thus be either a named individual or any individual occupying a named position.) (40 C.F.R. § 122.22(b)(2)); and

c. The written authorization is submitted to the Central Valley Water Board and State Water Board. (40 C.F.R. § 122.22(b)(3))

4. If an authorization under Standard Provisions – Reporting V.B.3 above is no longer accurate because a different individual or position has responsibility for the overall operation of the facility, a new authorization satisfying the requirements of Standard Provisions – Reporting V.B.3 above must be submitted to the Central Valley Water Board and State Water Board prior to or together with any reports, information, or applications, to be signed by an authorized representative. (40 C.F.R. § 122.22(c))

5. Any person signing a document under Standard Provisions – Reporting V.B.2 or V.B.3 above shall make the following certification:

   "I certify under penalty of law that this document and all attachments were prepared under my direction or supervision in accordance with a system designed to assure that qualified personnel properly gather and evaluate the information submitted. Based on my inquiry of the person or persons who manage the system or those persons directly responsible for gathering the information, the information submitted is, to the best of my knowledge and belief, true, accurate, and complete. I am aware that there are significant penalties for submitting false information, including the possibility of fine and imprisonment for knowing violations." (40 C.F.R. § 122.22(d))

6. Any person providing the electronic signature for such documents described in Standard Provision – V.B.1, V.B.2, or V.B.3 that are submitted electronically shall meet all relevant requirements of Standard Provisions – Reporting V.B, and shall ensure that all of the relevant requirements of 40 C.F.R. part 3 (Cross-Media Electronic Reporting) and 40 C.F.R. part 127 (NPDES Electronic Reporting Requirements) are met for that submission. (40 C.F.R § 122.22(e))

C. Monitoring Reports

1. Monitoring results shall be reported at the intervals specified in the Monitoring and Reporting Program (Attachment E) in this Order. (40 C.F.R. § 122.41(l)(4))

2. Monitoring results must be reported on a Discharge Monitoring Report (DMR) form or forms provided or specified by the Central Valley Water Board or State Water Board for reporting the results of monitoring, sludge use, or disposal practices. As of 21 December 2016, all reports and forms must be submitted electronically to the initial recipient, defined in Standard Provisions – Reporting V.J, and comply with 40 C.F.R part 3, section 122.22, and 40 C.F.R. part 127. (40 C.F.R. § 122.41(l)(4)(i))

3. If the Discharger monitors any pollutant more frequently than required by this Order using test procedures approved under 40 C.F.R. part 136, or another method required for an industry-specific waste stream under 40 C.F.R. subchapters N or O, the results of such monitoring shall be included in the calculation and reporting of the data submitted in the DMR or sludge reporting form specified by the Central Valley Water Board. (40 C.F.R. § 122.41(l)(4)(ii))

4. Calculations for all limitations, which require averaging of measurements, shall utilize an arithmetic mean unless otherwise specified in this Order. (40 C.F.R. § 122.41(l)(4)(iii))

D. Compliance Schedules

Reports of compliance or noncompliance with, or any progress reports on, interim and final requirements contained in any compliance schedule of this Order, shall be submitted no later than 14 days following each schedule date. (40 C.F.R. § 122.41(l)(5))

E. Twenty-Four Hour Reporting

1. The Discharger shall report any noncompliance which may endanger health or the environment. Any information shall be provided orally within 24 hours from the time the Discharger becomes aware of the circumstances. A report shall also be provided within five (5) days of the time the Discharger becomes aware of the circumstances. The report shall contain a description of the noncompliance and its cause; the period of noncompliance, including exact dates and times, and if the noncompliance has not been corrected, the anticipated time it is expected to continue; and steps taken or planned to reduce, eliminate, and prevent reoccurrence of the noncompliance.

   For noncompliance events related to combined sewer overflows, sanitary sewer overflows, or bypass events, these reports must include the data described above (with the exception of time of discovery) as well as the type of event (combined sewer overflows, sanitary sewer overflows, or bypass events), type of sewer overflow structure (e.g., manhole, combined sewer overflow outfall), discharge volumes untreated by the treatment works treating domestic sewage, types of human health and environmental impacts of the sewer overflow event, and whether the noncompliance was related to wet weather.

   As of 21 December 2020 all reports related to combined sewer overflows, sanitary sewer overflows, or bypass events must be submitted electronically to the initial recipient (State Water Board) defined in Standard Provisions – Reporting V.J. The reports shall comply with 40 C.F.R. part 3. The Discharger may also be required to electronically submit reports not related to combined sewer overflows, sanitary sewer overflows, or bypass events under this section. (40 C.F.R. § 122.41(l)(6)(i))

2. The following shall be included as information that must be reported within 24 hours under this paragraph (40 C.F.R. § 122.41(l)(6)(ii)):

   a. Any unanticipated bypass that exceeds any effluent limitation in this Order. (40 C.F.R. § 122.41(l)(6)(ii)(A))

   b. Any upset that exceeds any effluent limitation in this Order. (40 C.F.R. § 122.41(l)(6)(ii)(B))

3. The Central Valley Water Board may waive the above-required written report under this provision on a case-by-case basis if an oral report has been received within 24 hours. (40 C.F.R. § 122.41(l)(6)(iii))

F. Planned Changes

The Discharger shall give notice to the Central Valley Water Board as soon as possible of any planned physical alterations or additions to the permitted facility. Notice is required under this provision only when (40 C.F.R. § 122.41(l)(1)):

1. The alteration or addition to a permitted facility may meet one of the criteria for determining whether a facility is a new source in section 122.29(b) (40 C.F.R. § 122.41(l)(1)(i)); or
2. The alteration or addition could significantly change the nature or increase the quantity of pollutants discharged. This notification applies to pollutants that are not subject to effluent limitations in this Order. (40 C.F.R. § 122.41(l)(1)(ii))
3. The alteration or addition results in a significant change in the Discharger's sludge use or disposal practices, and such alteration, addition, or change may justify the application of permit conditions that are different from or absent in the existing permit, including notification of additional use or disposal sites not reported during the permit application process or not reported pursuant to an approved land application plan. (40 C.F.R.§ 122.41(l)(1)(iii))

G. Anticipated Noncompliance

The Discharger shall give advance notice to the Central Valley Water Board of any planned changes in the permitted facility or activity that may result in noncompliance with this Order's requirements. (40 C.F.R. § 122.41(l)(2))

H. Other Noncompliance

The Discharger shall report all instances of noncompliance not reported under Standard Provisions – Reporting V.C, V.D, and V.E above at the time monitoring reports are submitted. The reports shall contain the information listed in Standard Provision – Reporting V.E above. For noncompliance events related to combined sewer overflows, sanitary sewer overflows, or bypass events, these reports shall contain the information described in Standard Provision – Reporting V.E and the applicable required data in appendix A to 40 C.F.R. part 127. The Central Valley Water Board may also require the Discharger to electronically submit reports not related to combined sewer overflows, sanitary sewer overflows, or bypass events under this section. (40 C.F.R. § 122.41(l)(7))

I. Other Information

When the Discharger becomes aware that it failed to submit any relevant facts in a permit application, or submitted incorrect information in a permit application or in any report to the Central Valley Water Board**,** State Water Board, or U.S. EPA, the Discharger shall promptly submit such facts or information. (40 C.F.R. § 122.41(l)(8))

J. Initial Recipient for Electronic Reporting Data

The owner, operator, or the duly authorized representative is required to electronically submit NPDES information specified in appendix A to 40 C.F.R. part 127 to the appropriate initial recipient, as determined by U.S. EPA, and as defined in 40 C.F.R. section 127.2(b). U.S. EPA will identify and publish the list of initial recipients on its website and in the Federal Register, by state and by NPDES data group [see 40 C.F.R. section 127.2(c)]. U.S. EPA will update and maintain this listing. (40 C.F.R. § 122.41(l)(9))

VI. STANDARD PROVISIONS – ENFORCEMENT

A. The Central Valley Water Board is authorized to enforce the terms of this permit under several provisions of the Water Code, including, but not limited to, sections 13385, 13386, and 13387.

VII. ADDITIONAL PROVISIONS – NOTIFICATION LEVELS

A. Publicly-Owned Treatment Works (POTW's)

All POTW's shall provide adequate notice to the Central Valley Water Board of the following (40 C.F.R. § 122.42(b)):

1. Any new introduction of pollutants into the POTW from an indirect discharger that would be subject to sections 301 or 306 of the CWA if it were directly discharging those pollutants (40 C.F.R. § 122.42(b)(1)); and
2. Any substantial change in the volume or character of pollutants being introduced into that POTW by a source introducing pollutants into the POTW at the time of adoption of the Order. (40 C.F.R. § 122.42(b)(2))
3. Adequate notice shall include information on the quality and quantity of effluent introduced into the POTW as well as any anticipated impact of the change on the quantity or quality of effluent to be discharged from the POTW. (40 C.F.R. § 122.42(b)(3))

ATTACHMENT E – MONITORING AND REPORTING PROGRAM

Contents

I. GENERAL MONITORING PROVISIONS E-2
II. MONITORING LOCATIONS E-3
III. INFLUENT MONITORING REQUIREMENTS E-4
A. MONITORING LOCATION INF-001 ..... E-4
IV. EFFLUENT MONITORING REQUIREMENTS E-4
A. MONITORING LOCATION EFF-001 ..... E-4
V. WHOLE EFFLUENT TOXICITY TESTING REQUIREMENTS E-5
VI. LAND DISCHARGE MONITORING REQUIREMENTS – NOT APPLICABLE E-8
VII. RECYCLING MONITORING REQUIREMENTS – NOT APPLICABLE E-8
VIII. RECEIVING WATER MONITORING REQUIREMENTS E-8
A. MONITORING LOCATIONS RSW-001 AND RSW-002 ..... E-8
IX. OTHER MONITORING REQUIREMENTS E-9
A. BIOSOLIDS – NOT APPLICABLE E-9
B. MUNICIPAL WATER SUPPLY E-9
C. FILTRATION SYSTEM AND ULTRAVIOLET LIGHT (UV) DISINFECTION SYSTEM E-9
D. EFFLUENT AND RECEIVING WATER CHARACTERIZATION E-10
X. REPORTING REQUIREMENTS ..... E-15~~E-14~~
A. GENERAL MONITORING AND REPORTING REQUIREMENTS ..... E-15~~E-14~~
B. SELF-MONITORING REPORTS (SMR'S) E-15
C. DISCHARGE MONITORING REPORTS (DMR'S) E-18
D. OTHER REPORTS E-18

Tables

TABLE E-1. MONITORING STATION LOCATIONS E-3
TABLE E-2. INFLUENT MONITORING E-4
TABLE E-3. EFFLUENT MONITORING E-4
TABLE E-4. CHRONIC TOXICITY TESTING DILUTION SERIES E-7
TABLE E-5. RECEIVING WATER MONITORING REQUIREMENTS E-8
TABLE E-6. MUNICIPAL WATER SUPPLY MONITORING REQUIREMENTS E-9
TABLE E-7. FILTRATION SYSTEM AND UV DISINFECTION SYSTEM MONITORING REQUIREMENTS E-9
TABLE E-8. EFFLUENT AND RECEIVING WATER CHARACTERIZATION MONITORING ..... E-11~~E-10~~
TABLE E-9. MONITORING PERIODS AND REPORTING SCHEDULE E-15
TABLE E-10. REPORTING REQUIREMENTS FOR SPECIAL PROVISIONS REPORTS E-18

ATTACHMENT E – MONITORING AND REPORTING PROGRAM (MRP)

The Code of Federal Regulations (40 C.F.R. § 122.48) requires that all NPDES permits specify monitoring and reporting requirements. Water Code sections 13267 and 13383 also authorize the Central Valley Water Board to require technical and monitoring reports. This MRP establishes monitoring and reporting requirements that implement federal and California regulations.

I. GENERAL MONITORING PROVISIONS

A. Samples and measurements taken as required herein shall be representative of the volume and nature of the monitored discharge. All samples shall be taken at the monitoring locations specified below and, unless otherwise specified, before the monitored flow joins or is diluted by any other waste stream, body of water, or substance. Monitoring locations shall not be changed without notification to and the approval of the Central Valley Water Board.

B. Effluent samples shall be taken downstream of the last addition of wastes to the treatment or discharge works where a representative sample may be obtained prior to mixing with the receiving waters. Samples shall be collected at such a point and in such a manner to ensure a representative sample of the discharge.

C. Chemical, bacteriological, and bioassay analyses of any material required by this Order shall be conducted by a laboratory certified for such analyses by the State Water Resources Control Board (State Water Board) and the California Division of Drinking Water (DDW). Laboratories that perform sample analyses must be identified in all monitoring reports submitted to the Central Valley Water Board. In the event a certified laboratory is not available to the Discharger for any onsite field measurements such as pH, dissolved oxygen, turbidity, temperature, and residual chlorine, such analyses performed by a noncertified laboratory will be accepted provided a Quality Assurance-Quality Control Program is instituted by the laboratory. A manual containing the steps followed in this program for any onsite field measurements such as pH, dissolved oxygen, turbidity, temperature, and residual chlorine must be kept onsite in the treatment facility laboratory and shall be available for inspection by Central Valley Water Board staff. The Discharger must demonstrate sufficient capability (qualified and trained employees, properly calibrated and maintained field instruments, etc.) to adequately perform these field measurements. The Quality Assurance-Quality Control Program must conform to U.S. EPA guidelines or to procedures approved by the Central Valley Water Board.

D. Appropriate flow measurement devices and methods consistent with accepted scientific practices shall be selected and used to ensure the accuracy and reliability of measurements of the volume of monitored discharges. All monitoring instruments and devices used by the Discharger to fulfill the prescribed monitoring program shall be properly maintained and calibrated as necessary, at least yearly, to ensure their continued accuracy. All flow measurement devices shall be calibrated at least once per year to ensure continued accuracy of the devices.

E. Monitoring results, including noncompliance, shall be reported at intervals and in a manner specified in this Monitoring and Reporting Program.

F. Laboratories analyzing monitoring samples shall be certified by DDW, in accordance with the provision of Water Code section 13176, and must include quality assurance/quality control data with their reports.

G. The Discharger shall ensure that the results of the Discharge Monitoring Report-Quality Assurance (DMR-QA) Study or the most recent Water Pollution Performance Evaluation

Study are submitted annually to the State Water Resources Control Board at the following address:

State Water Resources Control Board
Quality Assurance Program Officer
Office of Information Management and Analysis
1001 I Street, Sacramento, CA 95814

H. The Discharger shall file with the Central Valley Water Board technical reports on self-monitoring performed according to the detailed specifications contained in this Monitoring and Reporting Program.

I. The results of all monitoring required by this Order shall be reported to the Central Valley Water Board, and shall be submitted in such a format as to allow direct comparison with the limitations and requirements of this Order. Unless otherwise specified, discharge flows shall be reported in terms of the monthly average and the daily maximum discharge flows.

II. MONITORING LOCATIONS

The Discharger shall establish the following monitoring locations to demonstrate compliance with the effluent limitations, discharge specifications, and other requirements in this Order:

Table E-1. Monitoring Station Locations

Discharge Point Name	Monitoring Location Name	Monitoring Location Description
--	INF-001	Location where a representative sample of the influent into the Facility can be collected prior to any plant return flows or treatment processes.
001	EFF-001B	Location where a representative sample of effluent from the Facility can be collected after all treatment processes and prior to discharge to the San Joaquin River.
--	RSW-001	San Joaquin River upstream at West Main Bridge.
--	RSW-002	San Joaquin River approximately 500 feet downstream of Discharge Point 001.
--	UVS-001	Monitoring of the filter effluent from the Phase 1A treatment train to be measured immediately downstream of the membranes prior to the UV disinfection system.
--	UVS-002	Monitoring of the filter effluent from the Phase 2 treatment train to be measured immediately downstream of the filters and prior to the UV disinfection system.
--	UVS-001A	Location where a representative sample of wastewater from the Phase 1A treatment train can be collected immediately downstream of the UV disinfection system.
--	UVS-002A	Location where a representative sample of wastewater from the Phase 2 treatment train can be collected immediately downstream of the UV disinfection system.
	SPL-001	Location where a representative sample of the municipal water supply can be collected.

III. INFLUENT MONITORING REQUIREMENTS

A. Monitoring Location INF-001

1. The Discharger shall monitor influent to the Facility at Monitoring Location INF-001 as follows:

Table E-2. Influent Monitoring

Parameter	Units	Sample Type	Minimum Sampling Frequency	Required Analytical Test Method
Flow	MGD	Meter	Continuous	--
Conventional Pollutants				
Biochemical Oxygen Demand(5-day @ 20°C)	mg/L	24-hr Composite[1]	1/Day	[2]
pH	standard units	Grab	1/Day	[2]
Total Suspended Solids	mg/L	24-hr Composite[1]	1/Day	[2]
Non-Conventional Pollutants				
Electrical Conductivity @ 25°C	µmhos/cm	Grab	1/Week	[2]

[1] 24-hour flow proportional composite.
[2] Pollutants shall be analyzed using the analytical methods described in 40 C.F.R. part 136 or by methods approved by the Central Valley Water Board or the State Water Board.

IV. EFFLUENT MONITORING REQUIREMENTS

A. Monitoring Location EFF-001

1. The Discharger shall monitor tertiary treated wastewater at Monitoring Location EFF-001, as follows. If more than one analytical test method is listed for a given parameter, the Discharger must select from the listed methods and corresponding Minimum Level (ML):

Table E-3. Effluent Monitoring

Parameter	Units	Sample Type	Minimum Sampling Frequency	Required Analytical Test Method
Flow	MGD	Meter	Continuous	--
Conventional Pollutants				
Biochemical Oxygen Demand (5-day @ 20° C)	mg/L	24-hr Composite[1]	1/Day	[2]
	lbs/day	Calculate	1/Day	--
pH	standard units	Meter	Continuous[3]	[2]
Total Suspended Solids	mg/L	24-hr Composite[1]	1/Day	[2]
	lbs/day	Calculate	1/Day	--
Priority Pollutants				
Mercury, Total Recoverable	µg/L	Grab	1/Month	[2,4,5]
Non-Conventional Pollutants				
Ammonia Nitrogen, Total (as N)	mg/L	Grab	1/Week[3,6]	[2]
	lbs/day	Calculate	1/Week	--

Parameter	Units	Sample Type	Minimum Sampling Frequency	Required Analytical Test Method
Boron	µg/L	24-hr Composite[1]	1/Month	[2]
Chloride	µg/L	24-hr Composite[1]	1/Month	[2]
Chlorpyrifos	µg/L	Grab	1/Year	[7]
Diazinon	µg/L	Grab	1/Year	[7]
Dissolved Oxygen	mg/L	Grab	1/Week	[2]
Electrical Conductivity @ 25°C	µmhos/cm	24-hr Composite[1]	2/Month	[2]
Hardness (as $CaCO_3$)	mg/L	24-hr Composite[1]	1/Month	[2]
Mercury (Methyl)	µg/L	Grab	1/Month	[2,5]
Nitrate Plus Nitrite, Total (as N)	mg/L	Grab	1/Week	[2]
Temperature	°C	Grab	1/Week[3]	[2]
Total Dissolved Solids	mg/L	24-hr Composite[1]	1/Month	[2]

[1] 24-hour flow proportional composite.
[2] Pollutants shall be analyzed using the analytical methods described in 40 C.F.R part 136 or by methods approved by the Central Valley Water Board or the State Water Board.
[3] pH and temperature shall be recorded at the time of ammonia sample collection.
[4] For priority pollutant constituents the reporting level shall be consistent with sections 2.4.2 and 2.4.3 of the *Policy for Implementation of Toxics Standards for Inland Surface Waters, Enclosed Bays, and Estuaries of California* (See Attachment E, section IX.D).
[5] Unfiltered methyl mercury and total mercury samples shall be taken using clean hands/dirty hands procedures, as described in U.S. EPA method 1669: Sampling Ambient Water for Trace Metals at EPA Water Quality Criteria Levels, for collection of equipment blanks (section 9.4.4.2), and shall be analyzed by U.S. EPA method 1630/1631 (Revision E) with a method detection limit of 0.2 ng/L.
[6] Concurrent with whole effluent toxicity monitoring.
[7] Chlorpyrifos and diazinon shall be sampled using U.S. EPA Method 625M, Method 8141, or equivalent GC/MS method.

2. If the discharge is intermittent rather than continuous, then on the first day of each such intermittent discharge, the Discharger shall monitor and record for all of the constituents listed above, after which the frequencies of analysis given in the schedule shall apply for the duration of each such intermittent discharge. In no event shall the Discharger be required to monitor and record data more often than twice the frequencies listed in the schedule.

V. WHOLE EFFLUENT TOXICITY TESTING REQUIREMENTS

A. Acute Toxicity Testing. The Discharger shall conduct acute toxicity testing to determine whether the effluent is contributing acute toxicity to the receiving water. The Discharger shall meet the following acute toxicity testing requirements:

1. *Monitoring Frequency* – The Discharger shall perform quarterly acute toxicity testing, concurrent with effluent ammonia sampling.

2. *Sample Types* – The Discharger may use flow-through or static renewal testing. For static renewal testing, the samples shall be 24-hour composites and shall be

representative of the volume and quality of the discharge. The effluent samples shall be taken at Monitoring Location EFF-001.

3. *Test Species* – Test species shall be rainbow trout (*Oncorhynchus mykiss*).

4. *Methods* – The acute toxicity testing samples shall be analyzed using EPA-821-R-02-012, Fifth Edition. Temperature, total residual chlorine, and pH shall be recorded at the time of sample collection. No pH adjustment may be made unless approved by the Executive Officer.

5. *Test Failure* – If an acute toxicity test does not meet all test acceptability criteria, as specified in the test method, the Discharger must re-sample and re-test as soon as possible, not to exceed 7 days following notification of test failure.

B. Chronic Toxicity Testing. The Discharger shall conduct three species chronic toxicity testing to determine whether the effluent is contributing chronic toxicity to the receiving water. The Discharger shall meet the following chronic toxicity testing requirements:

1. *Monitoring Frequency –* The Discharger shall perform quarterly three species chronic toxicity testing.

2. *Sample Types* – Effluent samples shall be 24-hour composites and shall be representative of the volume and quality of the discharge. The effluent samples shall be taken at Monitoring Location EFF-001. The receiving water control shall be a grab sample obtained from Monitoring Location RSW-001, as identified in this MRP.

3. *Sample Volumes* – Adequate sample volumes shall be collected to provide renewal water to complete the test in the event that the discharge is intermittent.

4. *Test Species* – Chronic toxicity testing measures sublethal (e.g., reduced growth, reproduction) and/or lethal effects to test organisms exposed to an effluent compared to that of the control organisms. The Discharger shall conduct chronic toxicity tests with:

   a. The cladoceran, water flea, *Ceriodaphnia dubia* (survival and reproduction test);

   b. The fathead minnow, *Pimephales promelas* (larval survival and growth test); and

   c. The green alga, *Selenastrum capricornutum* (growth test).

5. Methods – The presence of chronic toxicity shall be estimated as specified in *Short-term Methods for Estimating the Chronic Toxicity of Effluents and Receiving Waters to Freshwater Organisms, Fourth Edition*, EPA/821-R-02-013, October 2002 (Method Manual).

6. Reference Toxicant – As required by the SIP, all chronic toxicity tests shall be conducted with concurrent testing with a reference toxicant and shall be reported with the chronic toxicity test results.

7. *Dilutions* –The chronic toxicity testing shall be performed using the dilution series identified in Table E-4, below, unless an alternative dilution series is detailed in a submitted TRE Action Plan. A receiving water control or laboratory water control may be used as the diluent.

Table E-4. Chronic Toxicity Testing Dilution Series

Sample	Dilutions[1] (%)					Control	
	100	75	50	25	12.5	Receiving Water	Laboratory Water
% Effluent	100	75	50	25	12.5	0	0
% Control Water	0	25	50	75	87.5	100	0

[1] Receiving water control or laboratory water control may be used as the diluent.

8. *Test Failure* – The Discharger must re-sample and re-test as soon as possible, but no later than fourteen (14) days after receiving notification of a test failure. A test failure is defined as follows:

   a. The reference toxicant test or the effluent test does not meet all test acceptability criteria as specified in the Method Manual, and its subsequent amendments or revisions; or

   b. The percent minimum significant difference (PMSD) measured for the test exceeds the upper PMSD bound variability criterion in Table 6 on page 52 of the Method Manual. (A re-test is only required in this case if the test results do not exceed the monitoring trigger specified in the Special Provision at section VI.C.2.a.ii of the Order.)

C. WET Testing Notification Requirements. The Discharger shall notify the Central Valley Water Board within 24-hours after the receipt of test results exceeding the monitoring trigger during regular or accelerated monitoring, or an exceedance of the acute toxicity effluent limitation.

D. WET Testing Reporting Requirements. All toxicity test reports shall include the contracting laboratory's complete report provided to the Discharger and shall be in accordance with the appropriate "Report Preparation and Test Review" sections of the method manuals. At a minimum, WET monitoring shall be reported as follows:

1. **Chronic WET Reporting.** Regular chronic toxicity monitoring results shall be reported to the Central Valley Water Board within 30 days following completion of the test and shall contain, at a minimum:

   a. The results expressed in TUc, measured as 100/NOEC, and also measured as 100/LC50, 100/EC25, 100/IC25, and 100/IC50, as appropriate.

   b. The statistical methods used to calculate endpoints;

   c. The statistical output page, which includes the calculation of the PMSD;

   d. The dates of sample collection and initiation of each toxicity test; and

   e. The results compared to the numeric toxicity monitoring trigger.

   Additionally, the monthly self-monitoring reports shall contain an updated chronology of chronic toxicity test results expressed in TUc, and organized by test species, type of test (survival, growth or reproduction), and monitoring frequency, i.e., either quarterly, monthly, accelerated, or TRE.

2. **Acute WET Reporting.** Acute toxicity test results shall be submitted with the monthly discharger self-monitoring reports and reported as percent survival.
3. **TRE Reporting.** Reports for TRE's shall be submitted in accordance with the schedule contained in the Discharger's approved TRE Work Plan, or as amended by the Discharger's TRE Action Plan.
4. **Quality Assurance (QA).** The Discharger must provide the following information for QA purposes:
   a. Results of the applicable reference toxicant data with the statistical output page giving the species, NOEC, LOEC, type of toxicant, dilution water used, concentrations used, PMSD, and dates tested.
   b. The reference toxicant control charts for each endpoint, which include summaries of reference toxicant tests performed by the contracting laboratory.
   c. Any information on deviations or problems encountered and how they were dealt with.

VI. LAND DISCHARGE MONITORING REQUIREMENTS – NOT APPLICABLE

Land discharge monitoring requirements are specified in separate WDR's (Order 99-112).

VII. RECYCLING MONITORING REQUIREMENTS – NOT APPLICABLE

Recycling monitoring requirements are specified in separate WDR's (Order 99-112).

VIII. RECEIVING WATER MONITORING REQUIREMENTS

A. Monitoring Locations RSW-001 and RSW-002

1. The Discharger shall monitor the San Joaquin River at Monitoring Locations RSW-001 and RSW-002 as follows:

Table E-5. Receiving Water Monitoring Requirements

Parameter	Units	Sample Type	Minimum Sampling Frequency	Required Analytical Test Method
San Joaquin River Flow[1]	MGD	Meter	Continuous	--
Conventional Pollutants				
pH	standard units	Grab	1/Week[2]	[3]
Non-Conventional Pollutants				
Dissolved Oxygen	mg/L	Grab	1/Week[2]	[3]
Electrical Conductivity @ 25°C	µmhos/cm	Grab	1/Week[2]	[3]
Hardness (as $CaCO_3$)[1]	mg/L	Grab	1/Month	[3]
Temperature	°C	Grab	1/Week[2]	[3]
Total Dissolved Solids	mg/L	Grab	1/Month	[3]
Turbidity	NTU	Grab	1/Week[2]	[3]

Parameter	Units	Sample Type	Minimum Sampling Frequency	Required Analytical Test Method

[1] Monitoring required at Monitoring Location RSW-001 only.
[2] A hand-held field meter may be used, provided the meter utilizes a U.S. EPA-approved algorithm/method and is calibrated and maintained in accordance with the manufacturer's instructions. A calibration and maintenance log for each meter used for monitoring required by this Monitoring and Reporting Program shall be maintained at the Facility.
[3] Pollutants shall be analyzed using the analytical methods described in 40 C.F.R. part 136 or by methods approved by the Central Valley Water Board or the State Water Board.

B. Groundwater Monitoring – Not Applicable

IX. OTHER MONITORING REQUIREMENTS

A. Biosolids – Not Applicable

Biosolids monitoring requirements are specified in separate WDR's (Order 94-030).

B. Municipal Water Supply

1. Monitoring Location SPL-001

a. The Discharger shall monitor the municipal water supply at SPL-001 as follows:

Table E-6. Municipal Water Supply Monitoring Requirements

Parameter	Units	Sample Type	Minimum Sampling Frequency	Required Analytical Test Method
Total Dissolved Solids[1]	mg/L	Grab	1/Quarter	[2]
Electrical Conductivity @ 25°C[1]	µmhos/cm	Grab	1/Quarter	[2]
Standard Minerals[3]	mg/L	Grab	1/Year	[2]

[1] If the water supply is from more than one source, the total dissolved solids and electrical conductivity shall be reported as a weighted average and include copies of supporting calculations.
[2] Pollutants shall be analyzed using the analytical methods described in 40 C.F.R. part 136 or by methods approved by the Central Valley Water Board or the State Water Board.
[3] Standard minerals shall include all major cations and anions and include verification that the analysis is complete (i.e., cation/anion balance).

C. Filtration System and Ultraviolet Light (UV) Disinfection System

1. Monitoring Locations UVS-001, UVS-002, UVS-001A and UVS-002A

a. The Discharger shall monitor the filtration system at Monitoring Locations UVS-001 and UVS-002, and the UV disinfection system at Monitoring Locations UVS-001A and UVS-002A as follows:

Table E-7. Filtration System and UV Disinfection System Monitoring Requirements

Parameter	Units	Sample Type	Monitoring Location	Minimum Sampling Frequency
Flow	MGD	Meter	UVS-001A, UVS-002A	Continuous[1]
Turbidity	NTU	Meter	UVS-001, UVS-002	Continuous[1,2]
Number of UV banks in operation	Number	Observation	N/A	Continuous[1]

Parameter	Units	Sample Type	Monitoring Location	Minimum Sampling Frequency
UV Transmittance	Percent (%)	Meter	UVS-001A, UVS-002A	Continuous[1]
UV Dose[3]	mJ/cm^2	Calculate	N/A	Continuous[1]
Total Coliform Organisms	MPN/100 mL	Grab	UVS-001A, UVS-002A	1/Day

[1] For continuous analyzers, the Discharger shall report documented routine meter maintenance activities including date, time of day, and duration, in which the analyzer(s) is not in operation. If analyzer(s) fail to provide continuous monitoring for more than 2 hours and influent and/or effluent from the disinfection process is not diverted for retreatment, the Discharger shall obtain and report hourly manual and/or grab sample results. The Discharger shall not decrease power settings or reduce the number of UV lamp banks in operation while the continuous analyzers are out of service and water is being disinfected.

[2] Report daily average and maximum turbidity.

[3] Report daily minimum hourly average UV dose and daily average UV dose. The minimum hourly average dose shall consist of lowest hourly average dose provided in any channel that had at least one bank of lamps operating during the hour interval. For channels that did not operate for the entire hour interval, the dose will be averaged based on the actual operation time.

D. Effluent and Receiving Water Characterization

1. **Monthly Monitoring.** Monthly samples shall be collected from the effluent and upstream receiving water (Monitoring Locations EFF-001 and RSW-001) and analyzed for the constituents listed in Table E-8, below. Monthly monitoring shall begin in June 2019 (12 consecutive samples, evenly distributed throughout the year) and the results of such monitoring shall be submitted to the Central Valley Water Board with the monthly self-monitoring reports.

   Each individual monitoring event shall provide representative sample results for the effluent and upstream receiving water. The timing of the effluent characterization monitoring has been synchronized with the effluent characterization monitoring requirements under Order R5-2016-0010 for the discharge to the Delta-Mendota Canal. The effluent characterization monitoring can be coordinated with equivalent monitoring performed under Order R5-2016-0010 for the discharge to the Delta-Mendota Canal. Effluent characterization monitoring is only required if discharging to surface water. If a surface water discharge to either the Delta-Mendota Canal per Order R5-2016-0010 or the San Joaquin River per this Order does not occur during a calendar month, effluent characterization monitoring is not required for that month.

   The Discharger may cease monitoring for the following constituents if they are not detected in the first 3 monthly samples: total cyanide, asbestos, dioxin, and EPA Method 608 polychlorinated biphenyls (PCB's) and chlorinated pesticides.

2. **Concurrent Sampling.** If a discharge to the San Joaquin River is occurring during this characterization monitoring, the monthly sampling shall be conducted such that effluent and receiving water sampling is performed on the same date.

3. **Sample Type.** All receiving water samples shall be taken as grab samples. Effluent samples shall be taken as described in Table E-8, below.

Table E-8. Effluent and Receiving Water Characterization Monitoring

Parameter	Units	Effluent Sample Type	Maximum Reporting Level[1]
2- Chloroethyl vinyl ether	µg/L	Grab	1
Acrolein	µg/L	Grab	2
Acrylonitrile	µg/L	Grab	2
Benzene	µg/L	Grab	0.5
Bromoform	µg/L	Grab	0.5
Carbon Tetrachloride	µg/L	Grab	0.5
Chlorobenzene	µg/L	Grab	0.5
Chloroethane	µg/L	Grab	0.5
Chloroform	µg/L	Grab	2
Chloromethane	µg/L	Grab	2
Dibromochloromethane	µg/L	Grab	0.5
Dichlorobromomethane	µg/L	Grab	0.5
Dichloromethane	µg/L	Grab	2
Ethylbenzene	µg/L	Grab	2
Hexachlorobenzene	µg/L	Grab	1
Hexachlorobutadiene	µg/L	Grab	1
Hexachloroethane	µg/L	Grab	1
Methyl bromide (Bromomethane)	µg/L	Grab	1
Naphthalene	µg/L	Grab	10
3-Methyl-4-Chlorophenol	µg/L	Grab	--
Tetrachloroethene	µg/L	Grab	0.5
Toluene	µg/L	Grab	2
trans-1,2-Dichloroethylene	µg/L	Grab	1
Trichloroethene	µg/L	Grab	2
Vinyl chloride	µg/L	Grab	0.5
Methyl-tert-butyl ether (MTBE)	µg/L	Grab	--
Trichlorofluoromethane	µg/L	Grab	--
1,1,1-Trichloroethane	µg/L	Grab	0.5
1,1,2- Trichloroethane	µg/L	Grab	0.5
1,1-dichloroethane	µg/L	Grab	0.5
1,1-dichloroethylene	µg/L	Grab	0.5
1,2-dichloropropane	µg/L	Grab	0.5
1,3-dichloropropylene	µg/L	Grab	0.5
1,1,2,2-tetrachloroethane	µg/L	Grab	0.5
1,1,2-Trichloro-1,2,2-Trifluoroethane	µg/L	Grab	0.5
1,2,4-trichlorobenzene	µg/L	Grab	1
1,2-dichloroethane	µg/L	Grab	0.5
1,2-dichlorobenzene	µg/L	Grab	0.5
1,3-dichlorobenzene	µg/L	Grab	0.5
1,4-dichlorobenzene	µg/L	Grab	0.5
Styrene	µg/L	Grab	--
Xylenes	µg/L	Grab	--
1,2-Benzanthracene	µg/L	Grab	5
1,2-Diphenylhydrazine	µg/L	Grab	1
2-Chlorophenol	µg/L	Grab	5
2,4-Dichlorophenol	µg/L	Grab	5
2,4-Dimethylphenol	µg/L	Grab	2

Parameter	Units	Effluent Sample Type	Maximum Reporting Level[1]
2,4-Dinitrophenol	µg/L	Grab	5
2,4-Dinitrotoluene	µg/L	Grab	5
2,4,6-Trichlorophenol	µg/L	Grab	10
2,6-Dinitrotoluene	µg/L	Grab	5
2-Nitrophenol	µg/L	Grab	10
2-Chloronaphthalene	µg/L	Grab	10
3,3'-Dichlorobenzidine	µg/L	Grab	5
3,4-Benzofluoranthene	µg/L	Grab	10
4-Chloro-3-methylphenol	µg/L	Grab	5
4,6-Dinitro-2-methylphenol	µg/L	Grab	10
4-Nitrophenol	µg/L	Grab	10
4-Bromophenyl phenyl ether	µg/L	Grab	10
4-Chlorophenyl phenyl ether	µg/L	Grab	5
Acenaphthene	µg/L	Grab	1
Acenaphthylene	µg/L	Grab	10
Anthracene	µg/L	Grab	10
Benzidine	µg/L	Grab	5
Benzo(a)pyrene (3,4-Benzopyrene)	µg/L	Grab	2
Benzo(g,h,i)perylene	µg/L	Grab	5
Benzo(k)fluoranthene	µg/L	Grab	2
Bis(2-chloroethoxy) methane	µg/L	Grab	5
Bis(2-chloroethyl) ether	µg/L	Grab	1
Bis(2-chloroisopropyl) ether	µg/L	Grab	10
Bis(2-ethylhexyl) phthalate[2]	µg/L	Grab	5
Butyl benzyl phthalate	µg/L	Grab	10
Chrysene	µg/L	Grab	5
Di-n-butylphthalate	µg/L	Grab	10
Di-n-octylphthalate	µg/L	Grab	10
Dibenzo(a,h)-anthracene	µg/L	Grab	0.1
Diethyl phthalate	µg/L	Grab	10
Dimethyl phthalate	µg/L	Grab	10
Fluoranthene	µg/L	Grab	10
Fluorene	µg/L	Grab	10
Hexachlorocyclopentadiene	µg/L	Grab	5
Indeno(1,2,3-c,d)pyrene	µg/L	Grab	0.05
Isophorone	µg/L	Grab	1
N-Nitrosodiphenylamine	µg/L	Grab	1
N-Nitrosodimethylamine	µg/L	Grab	5
N-Nitrosodi-n-propylamine	µg/L	Grab	5
Nitrobenzene	µg/L	Grab	10
Pentachlorophenol	µg/L	Grab	1
Phenanthrene	µg/L	Grab	5
Phenol	µg/L	Grab	1
Pyrene	µg/L	Grab	10
Aluminum	µg/L	24-hr Composite[3]	
Antimony	µg/L	24-hr Composite[3]	5
Arsenic	µg/L	24-hr Composite[3]	10
Asbestos	MFL	24-hr Composite[3]	--

Parameter	Units	Effluent Sample Type	Maximum Reporting Level[1]
Barium	µg/L	24-hr Composite[4]	--
Beryllium	µg/L	24-hr Composite[3]	2
Cadmium	µg/L	24-hr Composite[3]	0.5
Chromium (Total)	µg/L	24-hr Composite[3]	50
Chromium (VI)	µg/L	Grab or 24-hr Composite[3]	10
Copper	µg/L	24-hr Composite[3]	5
Cyanide	µg/L	24-hr Composite[3]	5
Fluoride	µg/L	24-hr Composite[3]	--
Iron	µg/L	24-hr Composite[3]	--
Lead	µg/L	24-hr Composite[3]	2
Mercury[4]	µg/L	Grab	0.5
Manganese	µg/L	24-hr Composite[3]	--
Molybdenum	µg/L	24-hr Composite	
Nickel	µg/L	24-hr Composite[3]	20
Selenium	µg/L	24-hr Composite[3]	5
Silver	µg/L	24-hr Composite[3]	2
Thallium	µg/L	24-hr Composite[3]	1
Tributyltin	µg/L	24-hr Composite[3]	--
Zinc	µg/L	24-hr Composite[3]	20
4,4'-DDD	µg/L	24-hr Composite[3]	0.05
4,4'-DDE	µg/L	24-hr Composite[3]	0.05
4,4'-DDT	µg/L	24-hr Composite[3]	0.01
alpha-Endosulfan	µg/L	24-hr Composite[3]	0.02
alpha-Hexachlorocyclohexane (BHC)	µg/L	24-hr Composite[3]	0.01
Aldrin	µg/L	24-hr Composite[3]	0.005
Alachlor	µg/L	24-hr Composite[4]	--
beta-Endosulfan	µg/L	24-hr Composite[3]	0.01
beta-Hexachlorocyclohexane	µg/L	24-hr Composite[3]	0.005
Chlordane	µg/L	24-hr Composite[3]	0.1
delta-Hexachlorocyclohexane	µg/L	24-hr Composite[3]	0.005
Dieldrin	µg/L	24-hr Composite[3]	0.01
Endosulfan sulfate	µg/L	24-hr Composite[3]	0.01
Endrin	µg/L	24-hr Composite[3]	0.01
Endrin Aldehyde	µg/L	24-hr Composite[3]	0.01
Heptachlor	µg/L	24-hr Composite[3]	0.01
Heptachlor Epoxide	µg/L	24-hr Composite[3]	0.02
Lindane (gamma-Hexachlorocyclohexane)	µg/L	24-hr Composite[3]	0.5
PCB-1016	µg/L	24-hr Composite[3]	0.5
PCB-1221	µg/L	24-hr Composite[3]	0.5
PCB-1232	µg/L	24-hr Composite[3]	0.5
PCB-1242	µg/L	24-hr Composite[3]	0.5
PCB-1248	µg/L	24-hr Composite[3]	0.5
PCB-1254	µg/L	24-hr Composite[3]	0.5
PCB-1260	µg/L	24-hr Composite[3]	0.5
Toxaphene	µg/L	24-hr Composite[3]	--
Atrazine	µg/L	24-hr Composite[4]	--
Bentazon	µg/L	24-hr Composite[4]	--

Parameter	Units	Effluent Sample Type	Maximum Reporting Level[1]
Carbofuran	µg/L	24-hr Composite[4]	--
2,4-D	µg/L	24-hr Composite[4]	--
Dalapon	µg/L	24-hr Composite[4]	--
1,2-Dibromo-3-chloropropane (DBCP)	µg/L	24-hr Composite[4]	--
Di(2-ethylhexyl)adipate	µg/L	24-hr Composite[4]	--
Dinoseb	µg/L	24-hr Composite[4]	--
Diquat	µg/L	24-hr Composite[4]	--
Endothal	µg/L	24-hr Composite[4]	--
Ethylene Dibromide	µg/L	24-hr Composite[4]	--
Methoxychlor	µg/L	24-hr Composite[4]	--
Molinate (Ordram)	µg/L	24-hr Composite[4]	--
Oxamyl	µg/L	24-hr Composite[4]	--
Picloram	µg/L	24-hr Composite[4]	--
Simazine (Princep)	µg/L	24-hr Composite[4]	--
Thiobencarb	µg/L	24-hr Composite[4]	--
2,3,7,8-TCDD (Dioxin)[5]	µg/L	24-hr Composite[3]	--
2,4,5-TP (Silvex)	µg/L	24-hr Composite[4]	--
Diazinon[4]	µg/L	24-hr Composite[4]	--
Chlorpyrifos[4]	µg/L	24-hr Composite[4]	--
Ammonia (as N)[4]	mg/L	24-hr Composite[3]	--
Boron[4]	µg/L	24-hr Composite[3]	--
Chloride[4]	mg/L	24-hr Composite[3]	--
Flow	MGD	Meter	--
Hardness (as $CaCO_3$)[4]	mg/L	Grab	--
Foaming Agents (MBAS)	µg/L	24-hr Composite[3]	--
Mercury, Methyl[4]	ng/L	Grab	--
Nitrate (as N)[4]	mg/L	24-hr Composite[3]	--
Nitrite (as N)[4]	mg/L	24-hr Composite[3]	--
pH[4]	standard units	Grab	--
Phosphorus, Total (as P)	mg/L	24-hr Composite[3]	--
Specific conductance (EC)[4]	µmhos/cm	24-hr Composite[3]	--
Sulfate	mg/L	24-hr Composite[3]	--
Sulfide (as S)	mg/L	24-hr Composite[3]	--
Sulfite (as SO_3)	mg/L	Grab or 24-hr Composite[3]	--
Temperature[4]	^oC	Grab	--
Total Dissolved Solids (TDS)[4]	mg/L	24-hr Composite[3]	--

1 The reporting levels required in this table for priority pollutant constituents are established based on section 2.4.2 and Appendix 4 of the SIP.

2 In order to verify if bis (2-ethylhexyl) phthalate is truly present, the Discharger shall take steps to assure that sample containers, sampling apparatus, and analytical equipment are not sources of the detected contaminant.

3 24-hour flow proportional composite.

4 The Discharger is not required to conduct effluent monitoring for constituents that have already been sampled in a given month, as required in Table E-3, except for hardness, pH, and temperature, which shall be conducted concurrently with the effluent sampling.

5 A maximum of four samples are required for the characterization study.

X. REPORTING REQUIREMENTS

A. General Monitoring and Reporting Requirements

1. The Discharger shall comply with all Standard Provisions (Attachment D) related to monitoring, reporting, and recordkeeping.
2. Upon written request of the Central Valley Water Board, the Discharger shall submit a summary monitoring report. The report shall contain both tabular and graphical summaries of the monitoring data obtained during the previous year(s).
3. **Compliance Time Schedules.** For compliance time schedules included in the Order, the Discharger shall submit to the Central Valley Water Board, on or before each compliance due date, the specified document or a written report detailing compliance or noncompliance with the specific date and task. If noncompliance is reported, the Discharger shall state the reasons for noncompliance and include an estimate of the date when the Discharger will be in compliance. The Discharger shall notify the Central Valley Water Board by letter when it returns to compliance with the compliance time schedule.
4. The Discharger shall report to the Central Valley Water Board any toxic chemical release data it reports to the State Emergency Response Commission within 15 days of reporting the data to the Commission pursuant to section 313 of the "*Emergency Planning and Community Right to Know Act*" of 1986.

B. Self-Monitoring Reports (SMR's)

1. The Discharger shall electronically submit SMR's using the State Water Board's California Integrated Water Quality System (CIWQS) Program website http://www.waterboards.ca.gov/water_issues/programs/ciwqs/. The CIWQS website will provide additional information for SMR submittal in the event there will be a planned service interruption for electronic submittal.
2. The Discharger shall report in the SMR the results for all monitoring specified in this MRP under sections III through IX. The Discharger shall submit monthly SMR's including the results of all required monitoring using U.S. EPA-approved test methods or other test methods specified in this Order. SMR's are to include all new monitoring results obtained since the last SMR was submitted. If the Discharger monitors any pollutant more frequently than required by this Order, the results of this monitoring shall be included in the calculations and reporting of the data submitted in the SMR. Monthly SMR's are required even if there is no discharge. If no discharge occurs during the month, the monitoring report must be submitted stating that there has been no discharge.
3. Monitoring periods and reporting for all required monitoring shall be completed according to the following schedule:

Table E-9. Monitoring Periods and Reporting Schedule

Sampling Frequency	Monitoring Period Begins On…	Monitoring Period	SMR Due Date
Continuous	Permit effective date	All	Submit with monthly SMR
1/Day	Permit effective date	(Midnight through 11:59 PM) or any 24-hour period that reasonably represents a calendar day for purposes of	Submit with monthly SMR

Sampling Frequency	Monitoring Period Begins On…	Monitoring Period	SMR Due Date
		sampling.	
1/Week	Permit effective date	Sunday through Saturday	Submit with monthly SMR
2/Month	Permit effective date	1st day of calendar month through last day of calendar month	Submit with monthly SMR
1/Month	Permit effective date	1st day of calendar month through last day of calendar month	First day of second calendar month following month of sampling
1/Quarter	Permit effective date	1 January through 31 March 1 April through 30 June 1 July through 30 September 1 October through 31 December	1 May 1 August 1 November 1 February of following year
1/Year	Permit effective date	1 January through 31 December	1 February of following year

4. **Reporting Protocols.** The Discharger shall report with each sample result the applicable Reporting Level (RL) and the current laboratory's Method Detection Limit (MDL), as determined by the procedure in 40 C.F.R. part 136.

   The Discharger shall report the results of analytical determinations for the presence of chemical constituents in a sample using the following reporting protocols:

   a. Sample results greater than or equal to the RL shall be reported as measured by the laboratory (i.e., the measured chemical concentration in the sample).

   b. Sample results less than the RL, but greater than or equal to the laboratory's MDL, shall be reported as "Detected, but Not Quantified", or DNQ. The estimated chemical concentration of the sample shall also be reported.

      For the purposes of data collection, the laboratory shall write the estimated chemical concentration next to DNQ. The laboratory may, if such information is available, include numerical estimates of the data quality for the reported result. Numerical estimates of data quality may be percent accuracy (± a percentage of the reported value), numerical ranges (low to high), or any other means considered appropriate by the laboratory.

   c. Sample results less than the laboratory's MDL shall be reported as "Not Detected," or ND.

   d. Dischargers are to instruct laboratories to establish calibration standards so that the ML value (or its equivalent if there is differential treatment of samples relative to calibration standards) is the lowest calibration standard. At no time is the Discharger to use analytical data derived from extrapolation beyond the lowest point of the calibration curve.

5. **Multiple Sample Data.** When determining compliance with an average monthly effluent limitation (AMEL), average weekly effluent limitation (AWEL), or maximum daily effluent limitation (MDEL) for priority pollutants and more than one sample result is available, the

Discharger shall compute the arithmetic mean unless the data set contains one or more reported determinations of DNQ or ND. In those cases, the Discharger shall compute the median in place of the arithmetic mean in accordance with the following procedure:

a. The data set shall be ranked from low to high, ranking the reported ND determinations lowest, DNQ determinations next, followed by quantified values (if any). The order of the individual ND or DNQ determinations is unimportant.

b. The median value of the data set shall be determined. If the data set has an odd number of data points, then the median is the middle value. If the data set has an even number of data points, then the median is the average of the two values around the middle unless one or both of the points are ND or DNQ, in which case the median value shall be the lower of the two data points where DNQ is lower than a value and ND is lower than DNQ.

6. The Discharger shall submit SMR's in accordance with the following requirements:

a. The Discharger shall arrange all reported data in a tabular format. The data shall be summarized to clearly illustrate whether the Facility is operating in compliance with interim and/or final effluent limitations. The Discharger is not required to duplicate the submittal of data that is entered in a tabular format within CIWQS. When electronic submittal of data is required and CIWQS does not provide for entry into a tabular format within the system, the Discharger shall electronically submit the data in a tabular format as an attachment.

b. The Discharger shall attach a cover letter to the SMR. The information contained in the cover letter shall clearly identify violations of the waste discharge requirements; discuss corrective actions taken or planned; and the proposed time schedule for corrective actions. Identified violations must include a description of the requirement that was violated and a description of the violation.

c. The Discharger shall retain all laboratory analysis sheets, including quality assurance/quality control information, for which sample analyses were performed as required by provision IV.A, and provide them to the Central Valley Water Board upon request.

7. The Discharger shall submit in the SMR's calculations and reports in accordance with the following requirements:

a. **Mass Loading Limitations**. For BOD_5, TSS, and ammonia, the Discharger shall calculate and report the mass loading (lbs/day) in the SMRs. The mass loading shall be calculated as follows:

Mass Loading (lbs/day) = Flow (MGD) x Concentration (mg/L) x 8.34

When calculating daily mass loading, the daily average flow and constituent concentration shall be used. For weekly average mass loading, the weekly average flow and constituent concentration shall be used. For monthly average mass loading, the monthly average flow and constituent concentration shall be used.

b. **Removal Efficiency (BOD_5 and TSS).** The Discharger shall calculate and report the percent removal of BOD_5 and TSS in the SMR's. The percent removal shall be calculated as specified in section VII.A of the Limitations and Discharge Requirements.

c. **Total Coliform Organisms Effluent Limitations**. The Discharger shall calculate and report the 7-day median of total coliform organisms for the effluent. The 7-day median of total coliform organisms shall be calculated as specified in section VII.C of the Limitations and Discharge Requirements.

d. **Total Calendar Annual Mass Loading Mercury Effluent Limitations**. The Discharger shall calculate and report the total calendar annual mercury mass loading for the effluent in the December SMR. The total calendar year annual mass loading shall be calculated as specified in section VII.B of the Limitations and Discharge Requirements.

e. **Dissolved Oxygen Receiving Water Limitations**. The Discharger shall report monthly in the self-monitoring report the dissolved oxygen concentrations in the effluent (Monitoring Location EFF-001) and the receiving water (Monitoring Locations RSW-001 and RSW-002).

f. **Turbidity Receiving Water Limitations**. The Discharger shall calculate and report the turbidity increase in the receiving water applicable to the natural turbidity condition specified in section V.A.17.a-e of the Limitations and Discharge Requirements.

g. **Temperature Receiving Water Limitations**. The Discharger shall calculate and report the temperature increase in the receiving water based on the difference in temperature at Monitoring Locations RSW-001 and RSW-002.

h. **Chlorpyrifos and Diazinon Effluent Limitations.** The Discharger shall calculate and report the value of S_{AMEL} and S_{AWEL} for the effluent, using the equations in Effluent Limitation IV.A.1.f and consistent with the Compliance Determination Language in section VII.H of the Limitations and Discharge Requirements.

C. Discharge Monitoring Reports (DMR's)

1. DMR's are U.S. EPA reporting requirements. The Discharger shall electronically certify and submit DMR's together with SMR's using Electronic Self-Monitoring Reports module eSMR 2.5 or any upgraded version. Electronic DMR submittal will be in addition to electronic SMR submittal. Information about electronic DMR submittal is available at the DMR website at: (http://www.waterboards.ca.gov/water_issues/programs/discharge_monitoring/).

D. Other Reports

1. **Special Study Reports and Progress Reports**. As specified in the Special Provisions contained in section VI.C of the Order, special study and progress reports shall be submitted in accordance with the following reporting requirements.

Table E-10. Reporting Requirements for Special Provisions Reports

Special Provision	Reporting Requirements
Pollution Prevention Plan for Mercury, Progress Reports (section VI.C.3.a)	**1 September**, annually
Pollution Prevention Plan for Mercury, evaluation of PPP effectiveness (section VI.C.3.a)	One year prior to permit expiration date, with Report of Waste Discharge

Special Provision	Reporting Requirements
Salinity Source Control Program, Annual Progress Reports (section VI.C.7.a)	**1 September**, annually

2. The Discharger shall report the results of any special studies, acute and chronic toxicity testing, TRE/TIE, PMP, and Pollution Prevention Plan required by Special Provisions - VI.C. The Discharger shall submit reports with the first monthly SMR scheduled to be submitted on or immediately following the report due date in compliance with SMR reporting requirements described in subsection X.B above.

3. Within 60 days of permit adoption, the Discharger shall submit a report outlining RL's, MDL's, and analytical methods for the constituents listed in Tables E-2, E-3, E-5, E-6, and E-7. In addition, no less than 6 months prior to conducting the effluent and receiving water characterization monitoring required in section IX.D, the Discharger shall submit a report outlining RL's, MDL's, and analytical methods for the constituents listed in Table E-8. The Discharger shall comply with the monitoring and reporting requirements for CTR constituents as outlined in section 2.3 and 2.4 of the SIP. The maximum required RL's for priority pollutant constituents shall be based on the ML's contained in Appendix 4 of the SIP, determined in accordance with section 2.4.2 and section 2.4.3 of the SIP. In accordance with section 2.4.2 of the SIP, when there is more than one ML value for a given substance, the Central Valley Water Board shall include as RL's, in the permit, all ML values and their associated analytical methods, listed in Appendix 4, that are below the calculated effluent limitation. The Discharger may select any one of those cited analytical methods for compliance determination. If no ML value is below the effluent limitation, then the Central Valley Water Board shall select as the RL, the lowest ML value and its associated analytical method, listed in Appendix 4, for inclusion in the permit. Table E-8 provides required maximum RL's in accordance with the SIP.

4. **Annual Operations Report.** By 30 January of each year, the Discharger shall submit a written report to the Executive Officer containing the following:

   a. The names, certificate grades, and general responsibilities of all persons employed at the Facility.

   b. The names and telephone numbers of persons to contact regarding the plant for emergency and routine situations.

   c. A statement certifying when the flow meter(s) and other monitoring instruments and devices were last calibrated, including identification of who performed the calibration.

   d. A statement certifying whether the current operation and maintenance manual, and contingency plan, reflect the wastewater treatment plant as currently constructed and operated, and the dates when these documents were last revised and last reviewed for adequacy.

   e. The Discharger may also be requested to submit an annual report to the Central Valley Water Board with both tabular and graphical summaries of the monitoring data obtained during the previous year. Any such request shall be made in writing. The report shall discuss the compliance record. If violations have occurred, the report shall also discuss the corrective actions taken and planned to bring the discharge into full compliance with the WDR's.

5. **Annual Pretreatment Reporting Requirements**. The Discharger shall submit annually a report to the Central Valley Water Board, with copies to U.S. EPA Region 9 and the State Water Board, describing the Discharger's pretreatment activities over the previous 12 months (1 January through 31 December). In the event that the Discharger is not in compliance with any conditions or requirements of this Order, including noncompliance with pretreatment audit/compliance inspection requirements, then the Discharger shall also include the reasons for noncompliance and state how and when the Discharger shall comply with such conditions and requirements.

   An annual report shall be submitted by **28 February** and include at least the following items:

   a. A summary of analytical results from representative, flow proportioned, 24-hour composite sampling of the Facility's influent and effluent for those pollutants U.S. EPA has identified under section 307(a) of the CWA which are known or suspected to be discharged by nondomestic users. This will consist of an annual full priority pollutant scan. The Discharger is not required to sample and analyze for asbestos. The Discharger shall submit the results of the annual priority pollutant scan electronically to the Central Valley Water Board using the State Water Board's CIWQS Program Website.

      Sludge shall be sampled during the same 24-hour period and analyzed for the same pollutants as the influent and effluent sampling and analysis. The sludge analyzed shall be a composite sample of a minimum of 12 discrete samples taken at equal time intervals over the 24-hour period. Wastewater and sludge sampling and analysis shall be performed at least annually. The Discharger shall also provide any influent, effluent or sludge monitoring data for nonpriority pollutants which may be causing or contributing to Interference, Pass-Through or adversely impacting sludge quality. Sampling and analysis shall be performed in accordance with the techniques prescribed in 40 C.F.R. part 136 and amendments thereto.

   b. A discussion of Upset, Interference, or Pass-Through incidents, if any, at the treatment plant, which the Discharger knows or suspects were caused by nondomestic users of the Facility. The discussion shall include the reasons why the incidents occurred, the corrective actions taken and, if known, the name and address of, the nondomestic user(s) responsible. The discussion shall also include a review of the applicable pollutant limitations to determine whether any additional limitations, or changes to existing requirements, may be necessary to prevent Pass-Through, Interference, or noncompliance with sludge disposal requirements.

   c. The cumulative number of nondomestic users that the Discharger has notified regarding Baseline Monitoring Reports and the cumulative number of nondomestic user responses.

   d. An updated list of the Discharger's significant industrial users (SIU's) including their names and addresses, or a list of deletions, additions and SIU name changes keyed to a previously submitted list. The Discharger shall provide a brief explanation for each change. The list shall identify the SIU's subject to federal categorical standards by specifying which set(s) of standards are applicable to each SIU. The list shall indicate which SIU's, or specific pollutants from each industry, are subject to local limitations. Local limitations that are more stringent than the federal categorical standards shall also be identified.

e. The Discharger shall characterize the compliance status through the year of record of each SIU by employing the following descriptions:

   i. Complied with baseline monitoring report requirements (where applicable);

   ii. Consistently achieved compliance;

   iii. Inconsistently achieved compliance;

   iv. Significantly violated applicable pretreatment requirements as defined by 40 C.F.R. section 403.8(f)(2)(vii);

   v. Complied with schedule to achieve compliance (include the date final compliance is required);

   vi. Did not achieve compliance and not on a compliance schedule; and

   vii. Compliance status unknown.

f. A report describing the compliance status of each SIU characterized by the descriptions in items iii through vii above shall be submitted for each calendar quarter by the first day of the second month following the end of the quarter. The report shall identify the specific compliance status of each such SIU and shall also identify the compliance status of the Facility with regards to audit/pretreatment compliance inspection requirements. If none of the aforementioned conditions exist, at a minimum, a letter indicating that all industries are in compliance and no violations or changes to the pretreatment program have occurred during the quarter must be submitted. The information required in the fourth quarter report shall be included as part of the annual report due every **28 February**. This quarterly reporting requirement shall commence upon issuance of this Order.

g. A summary of the inspection and sampling activities conducted by the Discharger during the past year to gather information and data regarding the SIU's. The summary shall include:

   i. The names and addresses of the SIU's subjected to surveillance and an explanation of whether they were inspected, sampled, or both and the frequency of these activities at each user; and

   ii. The conclusions or results from the inspection or sampling of each industrial user.

h. The Discharger shall characterize the compliance status of each SIU by providing a list or table which includes the following information:

   i. Name of SIU;

   ii. Category, if subject to federal categorical standards;

   iii. The type of wastewater treatment or control processes in place;

   iv. The number of samples taken by the Facility during the year;

   v. The number of samples taken by the SIU during the year;

   vi. For an SIU subject to discharge requirements for total toxic organics, whether all required certifications were provided;

   vii. A list of the standards violated during the year. Identify whether the violations were for categorical standards or local limits.

viii. Whether the facility is in significant noncompliance (SNC) as defined at 40 C.F.R. section 403.8(f)(2)(viii) at any time during the year; and

ix. A summary of enforcement or other actions taken during the year to return the SIU to compliance. Describe the type of action (e.g., warning letters or notices of violation, administrative orders, civil actions, and criminal actions), final compliance date, and the amount of fines and penalties collected, if any. Describe any proposed actions for bringing the SIU into compliance;

x. Restriction of flow to the Facility.

xi. Disconnection from discharge to the Facility.

i. A brief description of any programs the Facility implements to reduce pollutants from nondomestic users that are not classified as SIU's;

j. A brief description of any significant changes in operating the pretreatment program which differ from the previous year including, but not limited to, changes concerning: the program's administrative structure, local limits, monitoring program or monitoring frequencies, legal authority, enforcement policy, funding levels, or staffing levels;

k. A summary of the annual pretreatment budget, including the cost of pretreatment program functions and equipment purchases; and

l. A summary of activities to involve and inform the public of the program including a copy of the newspaper notice, if any, required under 40 C.F.R. section 403.8(f)(2)(viii).

Pretreatment Program reports shall be submitted to the Central Valley Water Board and the:

State Water Resources Control Board

NPDES_Wastewater@waterboards.ca.gov

and the

U.S. EPA Region 9 Pretreatment Coordinator

R9Pretreatment@epa.gov

ATTACHMENT F – FACT SHEET

Contents

I. PERMIT INFORMATION F-3
II. FACILITY DESCRIPTION F-4
A. DESCRIPTION OF WASTEWATER AND BIOSOLIDS TREATMENT AND CONTROLS F-4
B. DISCHARGE POINTS AND RECEIVING WATERS F-5
C. SUMMARY OF EXISTING REQUIREMENTS AND SELF-MONITORING REPORT (SMR) DATA F-6
D. COMPLIANCE SUMMARY F-9
E. PLANNED CHANGES F-9
III. APPLICABLE PLANS, POLICIES, AND REGULATIONS F-9
A. LEGAL AUTHORITIES F-10
B. CALIFORNIA ENVIRONMENTAL QUALITY ACT (CEQA) F-10
C. STATE AND FEDERAL LAWS, REGULATIONS, POLICIES, AND PLANS F-10
D. IMPAIRED WATER BODIES ON CWA 303(D) LIST F-12
E. OTHER PLANS, POLICIES AND REGULATIONS – NOT APPLICABLE F-13
IV. RATIONALE FOR EFFLUENT LIMITATIONS AND DISCHARGE SPECIFICATIONS F-13
A. DISCHARGE PROHIBITIONS F-14
B. TECHNOLOGY-BASED EFFLUENT LIMITATIONS F-15
1. SCOPE AND AUTHORITY F-15
2. APPLICABLE TECHNOLOGY-BASED EFFLUENT LIMITATIONS F-15
C. WATER QUALITY-BASED EFFLUENT LIMITATIONS (WQBEL'S) F-16
1. SCOPE AND AUTHORITY F-16
2. APPLICABLE BENEFICIAL USES AND WATER QUALITY CRITERIA AND OBJECTIVES F-17
3. DETERMINING THE NEED FOR WQBEL'S F-26
4. WQBEL CALCULATIONS F-46
5. WHOLE EFFLUENT TOXICITY (WET) F-49
D. FINAL EFFLUENT LIMITATION CONSIDERATIONS F-52
1. MASS-BASED EFFLUENT LIMITATIONS F-52
2. AVERAGING PERIODS FOR EFFLUENT LIMITATIONS F-53
3. SATISFACTION OF ANTI-BACKSLIDING REQUIREMENTS F-53
4. ANTIDEGRADATION POLICIES F-54
5. STRINGENCY OF REQUIREMENTS FOR INDIVIDUAL POLLUTANTS F-59
E. INTERIM EFFLUENT LIMITATIONS – NOT APPLICABLE F-61
F. LAND DISCHARGE SPECIFICATIONS – NOT APPLICABLE F-61
G. RECYCLING SPECIFICATIONS – NOT APPLICABLE F-61
V. RATIONALE FOR RECEIVING WATER LIMITATIONS F-61
A. SURFACE WATER F-61
B. GROUNDWATER – NOT APPLICABLE F-62
VI. RATIONALE FOR PROVISIONS F-62
A. STANDARD PROVISIONS F-62
B. SPECIAL PROVISIONS F-62
1. REOPENER PROVISIONS F-62
2. SPECIAL STUDIES AND ADDITIONAL MONITORING REQUIREMENTS F-63
3. BEST MANAGEMENT PRACTICES AND POLLUTION PREVENTION F-67

4. CONSTRUCTION, OPERATION, AND MAINTENANCE SPECIFICATIONS F-67
5. SPECIAL PROVISIONS FOR PUBLICLY-OWNED TREATMENT WORKS (POTW'S) F-68
6. OTHER SPECIAL PROVISIONS F-69
7. COMPLIANCE SCHEDULES F-69
VII. RATIONALE FOR MONITORING AND REPORTING REQUIREMENTS F-70
A. INFLUENT MONITORING F-70
B. EFFLUENT MONITORING ..... F-72~~F-70~~
C. WHOLE EFFLUENT TOXICITY TESTING REQUIREMENTS ..... F-73~~F-72~~
D. RECEIVING WATER MONITORING ..... F-73~~F-72~~
1. SURFACE WATER ..... F-73~~F-72~~
2. GROUNDWATER – NOT APPLICABLE ..... F-74~~F-73~~
E. OTHER MONITORING REQUIREMENTS ..... F-74~~F-73~~
VIII. PUBLIC PARTICIPATION ..... F-75~~F-74~~
A. NOTIFICATION OF INTERESTED PARTIES ..... F-75~~F-74~~
B. WRITTEN COMMENTS ..... F-75~~F-74~~
C. PUBLIC HEARING ..... F-76~~F-74~~
D. RECONSIDERATION OF WASTE DISCHARGE REQUIREMENTS ..... F-76~~F-75~~
E. INFORMATION AND COPYING ..... F-76~~F-75~~
F. REGISTER OF INTERESTED PERSONS ..... F-76~~F-75~~
G. ADDITIONAL INFORMATION ..... F-76~~F-75~~

Tables

TABLE F-1. FACILITY INFORMATION F-3
TABLE F-2. HISTORIC EFFLUENT LIMITATIONS AND MONITORING DATA – SEASONAL SECONDARY TREATED EFFLUENT F-6
TABLE F-3. HISTORIC EFFLUENT LIMITATIONS AND MONITORING DATA – YEAR-ROUND TERTIARY TREATED EFFLUENT F-8
TABLE F-4. BASIN PLAN BENEFICIAL USES F-10
TABLE F-5. 303(D) LIST FOR THE SAN JOAQUIN RIVER (MERCED RIVER TO TUOLUMNE RIVER) F-13
TABLE F-6. SUMMARY OF TECHNOLOGY-BASED EFFLUENT LIMITATIONS F-16
TABLE F-7. SUMMARY OF CTR CRITERIA FOR HARDNESS-DEPENDENT METALS F-20
TABLE F-8. VERIFICATION OF CTR COMPLIANCE FOR ZINC F-25
TABLE F-9. VERIFICATION OF CTR COMPLIANCE FOR SILVER F-26
TABLE F-10. SALINITY WATER QUALITY CRITERIA/OBJECTIVES F-43
TABLE F-11. BASIN PLAN[1] WATER QUALITY OBJECTIVES FOR BORON – SAN JOAQUIN RIVER, MOUTH OF MERCED RIVER TO VERNALIS F-44
TABLE F-12. SUMMARY OF WATER QUALITY-BASED EFFLUENT LIMITATIONS F-48
TABLE F-13. WHOLE EFFLUENT CHRONIC TOXICITY TESTING RESULTS F-52
TABLE F-14. SUMMARY OF FINAL EFFLUENT LIMITATIONS F-60

ATTACHMENT F – FACT SHEET

As described in section II.B of this Order, the Central Valley Water Board incorporates this Fact Sheet as findings of the Central Valley Water Board supporting the issuance of this Order. This Fact Sheet includes the legal requirements and technical rationale that serve as the basis for the requirements of this Order.

This Order has been prepared under a standardized format to accommodate a broad range of discharge requirements for Dischargers in California. Only those sections or subsections of this Order that are specifically identified as “not applicable” have been determined not to apply to this Discharger. Sections or subsections of this Order not specifically identified as “not applicable” are fully applicable to this Discharger.

I. PERMIT INFORMATION

The following table summarizes administrative information related to the Facility.

Table F-1. Facility Information

WDID	5C500102001
CIWQS Facility Place ID	241146 (Sutter Avenue Primary Treatment Facility) 273037 (Jennings Road Secondary/Tertiary Facility)
Discharger	City of Modesto
Name of Facility	Water Quality Control Facility
Facility Address	1221 Sutter Avenue
	Modesto, CA 95351
	Stanislaus County
Facility Contact, Title and Phone	Laura Anhalt, Plant Manager, (209) 577-6200
Authorized Person to Sign and Submit Reports	Laura Anhalt, Plant Manager, (209) 577-6200
Mailing Address	Same as Facility Address
Billing Address	Same as Facility Address
Type of Facility	Publicly Owned Treatment Works (POTW)
Major or Minor Facility	Major
Threat to Water Quality	1
Complexity	A
Pretreatment Program	Yes
Recycling Requirements	Recycling regulated under Waste Discharge Requirements (WDR) Order 99-112 or future updated Order.
Facility Permitted Flow	Existing Plant: 14.9 million gallons per day (MGD), average daily discharge flow Expanded Plant: 19.1 MGD, average daily discharge flow
Facility Design Flow	Existing Plant: 14.9 MGD, average daily discharge flow Expanded Plant: 19.1 MGD, average daily discharge flow
Watershed	Middle San Joaquin – Lower Merced – Lower Stanislaus
Receiving Water	San Joaquin River
Receiving Water Type	Inland Surface Water

A. The City of Modesto (hereinafter Discharger) is the owner and operator of the City of Modesto Water Quality Control Facility (hereinafter Facility), a POTW.

For the purposes of this Order, references to the "discharger" or "permittee" in applicable federal and state laws, regulations, plans, or policy are held to be equivalent to references to the Discharger herein.

B. The Facility discharges wastewater to the San Joaquin River, a water of the United States, within the Middle San Joaquin – Lower Merced – Lower Stanislaus watershed. The Discharger was previously regulated by Order R5-2012-0031 and National Pollutant Discharge Elimination System (NPDES) Permit No. CA0079103 adopted on 7 June 2012 with an expiration date of 1 June 2017. Attachment B provides a map of the area around the Facility. Attachment C provides flow schematics of the Facility.

C. When applicable, state law requires dischargers to file a petition with the State Water Board, Division of Water Rights and receive approval for any change in the point of discharge, place of use, or purpose of use of treated wastewater that decreases the flow in any portion of a watercourse. The State Water Board retains separate jurisdictional authority to enforce any applicable requirements under Water Code section 1211. This is not an NPDES permit requirement.

D. The Discharger filed a report of waste discharge (ROWD) and submitted an application for reissuance of its waste discharge requirements (WDR's) and NPDES permit on 1 December 2016. The application was deemed complete on 17 February 2017. A site visit was conducted on 3 November 2016 to observe operations and collect additional data to develop permit limitations and requirements for waste discharge.

E. Regulations at 40 C.F.R. section 122.46 limit the duration of NPDES permits to a fixed term not to exceed 5 years. Accordingly, Table 3 of this Order limits the duration of the discharge authorization. However, pursuant to California Code of Regulations, title 23, section 2235.4, the terms and conditions of an expired permit are automatically continued pending reissuance of the permit if the Discharger complies with all federal NPDES requirements for continuation of expired permits.

II. FACILITY DESCRIPTION

The Discharger provides sewerage service for the City of Modesto, the community of Empire, and a portion of the City of Ceres and serves a population of approximately 256,000. The Facility's current design daily average flow capacity for tertiary treated wastewater is 14.9 MGD, with plans to expand the capacity to 19.1 MGD. In addition to domestic wastewater, the Discharger operates a pretreatment program that encompasses 30 non-categorical significant industrial users (SIU's) and five categorical industrial users (CIU's). The Discharger's collection system consists of approximately 670 miles of sewer lines, which collect and convey an average influent flow of 20.9 MGD to the Facility.

The Facility consists of separate primary and tertiary treatment facilities. The primary treatment facility, located at 1221 Sutter Avenue, provides primary treatment of the raw wastewater before transferring the treated effluent to the tertiary treatment facility, located approximately 6.5 miles to the southwest at 7007 Jennings Road.

A. Description of Wastewater and Biosolids Treatment and Controls

The treatment system at the Facility consists of two separate primary and secondary treatment facilities. The primary treatment plant consists of screening, grit removal, and primary clarification. Sludge from the clarifiers is transferred to thickeners, then processed

and stabilized through anaerobic digesters. Digested sludge is transferred to holding tanks where it is periodically drawn to unlined drying beds, with supernatant flows routed to the septage disposal station for blending with influent wastewater. The Discharger applies the stabilized sludge as a soil amendment on their 2,526-acre ranch, which is regulated by separate WDR Order 94 030.

After clarification, primary effluent is directed to the Jennings Road secondary/tertiary treatment facility where the wastewater receives secondary treatment for irrigation of pasture land or receives tertiary filtration and ultra violet light disinfection for discharge to the San Joaquin River. For the secondary treatment system, approximately half of the primary effluent receives treatment with fixed film reactors and then is combined with primary effluent in an aerated recirculation channel. Flow in the recirculation channel is then distributed to three parallel facultative ponds for further treatment, and then transferred to one of two storage ponds before being applied to the Discharger's 2,526-acre ranch at agronomic rates.

The Facility's tertiary treatment facility consists of two parallel two-step membrane bioreactor (MBR) facilities. The Phase 1A facility consists of an oxidation ditch that provides activated sludge biological treatment, reducing biochemical oxygen demand (BOD_5) and providing nitrogen removal (i.e., nitrification/denitrification). The oxidation ditch is followed by membrane filtration and ultraviolet light (UV) radiation that disinfects the filtered wastewater prior to storage or discharge. Phase 1A construction of the tertiary treatment facilities (2.3 MGD) was completed on 1 July 2010. The Phase 2 facility consists of aeration basins for activated sludge biological treatment followed by membrane filtration and UV disinfection. The Phase 2 facility provides a tertiary treatment capacity of 12.6 MGD, and was completed in the spring of 2017. The current total tertiary filtration average dry weather flow capacity is 14.9 MGD. The Discharger previously conducted an antidegradation analysis for the full build-out and requested approval for the full Phase 3 build-out discharge of 19.1 MGD. Phases 4 and 5 are planned for the future with a full build-out capacity of 27.3 MGD (see section II.E of this Fact Sheet). The tertiary treated wastewater may be reused on the Discharger's 2,526-acre ranch or discharged to the San Joaquin River. In addition, the Discharger has partnered with the City of Turlock and the Del Puerto Water District for the North Valley Regional Recycled Water Program. A separate permit, Order R5-2016-0010, allows the Facility to discharge up to 14.9 MGD of tertiary treated recycled water, via a proposed pipeline, to the Delta-Mendota Canal, where it will be beneficially reused. Upon completion of the pipeline to the Delta-Mendota Canal, the Discharger will primarily discharge to the Delta-Mendota Canal, and discharge to the San Joaquin River only when a discharge to the Delta-Mendota Canal is infeasible.

The Discharger separates cannery wastes from the domestic wastewater. A separate 60-inch outfall transports cannery wastewaters to the ranch land located next to the secondary-level treatment facility. The cannery wastewater is applied directly to the ranch land at agronomic rates during the canning season (July – September). Land application of cannery and secondary wastewaters to the ranch land is regulated by separate Order 99-112.

B. Discharge Points and Receiving Waters

1. Both the primary and secondary facilities are located in Section 4, T5S, R8E, MDB&M, as shown in Attachment B, a part of this Order.
2. Treated municipal wastewater is discharged at Discharge Point 001 to the San Joaquin River, a water of the United States, at a point latitude 37° 31' 20" N and longitude 121° 05' 47" W.

C. Summary of Existing Requirements and Self-Monitoring Report (SMR) Data

1. This Order renews Order R5-2012-0031. Effluent limitations contained in Order R5-2012-0031 for discharges of disinfected, secondary treated effluent from Discharge Point 001 (Monitoring Location EFF-001A) and representative monitoring data from the term of Order R5-2012-0031 are as follows:

Table F-2. Historic Effluent Limitations and Monitoring Data – Seasonal Secondary Treated Effluent

Parameter	Units	Effluent Limitation			Monitoring Data (September 2013 – August 2016)		
		Average Monthly	Average Weekly	Maximum Daily	Highest Average Monthly Discharge	Highest Average Weekly Discharge	Highest Daily Discharge
Flow	MGD	--	--	70[1]	--	--	63[2]
Conventional Pollutants							
Biochemical Oxygen Demand (5-day @ 20°C)	mg/L	30	45	90	11	12	41
	lbs/day[3]	17,500	26,300	52,500	895	1,191	1,666
	% Removal	85	--	--	95[4]	--	--
Total Suspended Solids	mg/L	45	60	105	10	11	32
	lbs/day[3]	26,300	35,000	61,300	830	1,145	1,569
	% Removal	85	--	--	95[4]	--	--
pH	standard units	--	--	6.5-8.5	--	--	6.7-8.8
Priority Pollutants							
Carbon Tetrachloride	µg/L	4.1	--	13	ND	--	ND
Copper, Total Recoverable	µg/L	15	--	26	3.6	--	3.6
Dibromochloromethane	µg/L	5.4	--	15	2.8	--	2.8
Dichlorobromomethane	µg/L	9.0	--	13	3.4	--	3.4
Mercury, Total Recoverable	lbs/year	1.16[5]	--	--	0.0144[6]	--	--
Non-Conventional Pollutants							
Aluminum, Total Recoverable	µg/L	457	200[7]	750	33	--	33
Ammonia, Total (as N)	mg/L	--	--	[8]	--	--	5.0
	mg/L	1.1[9]	--	2.1[9]	--	--	--
	lbs/day[3]	640[9]	--	1,200[9]	--	--	--
Chlorpyrifos	µg/L	[10]	--	[11]	ND	--	ND
Diazinon	µg/L	[10]	--	[11]	ND	--	ND
Electrical Conductivity @ 25°C	µmhos/cm	1,341[12]	--	--	1,350	--	--
	µmhos/cm	700[13]	--	--	--	--	--
	µmhos/cm	1,000[14]	--	--	--	--	--
Iron, Total Recoverable	µg/L	300[7]	--	--	78[15]	--	--
Manganese, Total Recoverable	µg/L	50[7]	--	--	19[15]	--	--

Parameter	Units	Effluent Limitation			Monitoring Data (September 2013 – August 2016)		
		Average Monthly	Average Weekly	Maximum Daily	Highest Average Monthly Discharge	Highest Average Weekly Discharge	Highest Daily Discharge
Molybdenum, Total Recoverable	µg/L	--	--	23	--	--	8.2
Total Residual Chlorine	mg/L	--	0.011[16]	0.019[17]	--	--	0.0035
Total Coliform Organisms	MPN/100 mL	--	23[18]	240[19]	--	--	1,600
Acute Toxicity	% Survival	--	--	70[20]/90[21]	--	--	100[22]
Chronic Toxicity	TUc	--	--	[23]	--	--	1

ND = Non-Detect

1 The average daily discharge flow shall not exceed 70 MGD.
2 Represents the maximum observed daily discharge.
3 Based on a design flow of 70 MGD.
4 Represents the minimum reported percent removal.
5 Applied as a total calendar annual mass loading effluent limitation.
6 Represents the maximum total calendar annual mass load.
7 Applied as an average annual effluent limitation.
8 Interim floating effluent limitation based on pH, effective until 1 May 2018 (see Table 7b of Order R5-2012-0031).
9 Final effluent limitation effective 1 May 2018.
10 Average Monthly Effluent Limitation

$$S_{AMEL} = \frac{C_{D\ avg}}{0.079} + \frac{C_{C\ avg}}{0.012} \leq 1.0$$

$C_{D\ M\text{-}AVG}$ = average monthly diazinon effluent concentration in µg/L.
$C_{C\ M\text{-}AVG}$ = average monthly chlorpyrifos effluent concentration in µg/L.

11 Maximum Daily Effluent Limitation

$$S_{MDEL} = \frac{C_{D\ max}}{0.16} + \frac{C_{C\ max}}{0.025} \leq 1.0$$

$C_{D\ max}$ = maximum daily diazinon effluent concentration in µg/L.
$C_{C\ max}$ = maximum daily chlorpyrifos effluent concentration in µg/L.

12 Interim effluent limitation in effect until 28 July 2022 or 28 July 2026, per compliance schedule.
13 Final effluent limitation for discharges from 1 April through 31 May, effective 28 July 2022 or 28 July 2026.
14 Final effluent limitation for discharges from 1 October through 31 March, effective 28 July 2022 or 28 July 2026.
15 Represents the maximum observed annual average.
16 Applied as a 4-day average effluent limitation.
17 Applied as a 1-hour average effluent limitation.
18 Applied as a 7-day median effluent limitation.
19 Applied as an instantaneous maximum effluent limitation.
20 Median percent survival of three consecutive acute bioassays.
21 Minimum percent survival for any one bioassay.
22 Represents the minimum observed percent survival.
23 There shall be no chronic toxicity in the effluent.

2. Effluent limitations contained in Order R5-2012-0031 for discharges of tertiary treated effluent from Discharge Point 001 (Monitoring Location EFF-001B) are as follows. The Discharger did not discharge tertiary treated effluent from Discharge Point 001 during the term of Order R5-2012-0031; therefore, effluent monitoring data is not available.

Table F-3. Historic Effluent Limitations and Monitoring Data – Year-Round Tertiary Treated Effluent

Parameter	Units	Effluent Limitation		
		Average Monthly	Average Weekly	Maximum Daily
Flow	MGD[1]	--	--	2.3
	MGD[2]	--	--	14.9
	MGD[3]	--	--	19.1
Conventional Pollutants				
Biochemical Oxygen Demand (5-day @ 20°C)	mg/L	10	15	20
	lbs/day[1]	200	300	400
	lbs/day[2]	1,200	1,900	2,500
	lbs/day[3]	1,600	2,400	3,200
	% Removal	85	--	--
Total Suspended Solids	mg/L	10	15	20
	lbs/day[1]	200	300	400
	lbs/day[2]	1,200	1,900	2,500
	lbs/day[3]	1,600	2,400	3,200
	% Removal	85	--	--
pH	standard units	--	--	6.5-8.5
Priority Pollutants				
Copper, Total Recoverable	µg/L	9.5	--	19
Mercury, Total Recoverable	lbs/year	1.16[4]	--	--
Non-Conventional Pollutants				
Aluminum, Total Recoverable	µg/L	457	200[5]	750
Ammonia, Total (as N)	mg/L	1.1	--	2.1
	lbs/day[1]	20	--	40
	lbs/day[2]	140	--	260
	lbs/day[3]	180	--	330
Chlorpyrifos	µg/L	[6]	--	[7]
Diazinon	µg/L	[6]	--	[7]
Electrical Conductivity	µmhos/cm	1,341[8]	--	--
	µmhos/cm	700[9]		
	µmhos/cm	1,000[10]		
Iron, Total Recoverable	µg/L	300[5]	--	--
Manganese, Total Recoverable	µg/L	50[5]	--	--
Molybdenum, Total Recoverable	µg/L	--	--	23
Nitrate Plus Nitrite, Total (as N)	mg/L	10	--	--
Total Coliform Organisms	MPN/100 mL	23[11]	2.2[12]	240[13]
Acute Toxicity	% Survival	--	--	70[14]/90[15]
Chronic Toxicity	TUc	--	--	[16]

Parameter	Units	Effluent Limitation		
		Average Monthly	Average Weekly	Maximum Daily

[1] Based on an average daily discharge flow of 2.3 MGD to coincide with phased upgrade project.
[2] Based on an average daily discharge flow of 14.9 MGD to coincide with phased upgrade project.
[3] Based on an average daily discharge flow of 19.1 MGD to coincide with phased upgrade project.
[4] Applied as a total calendar annual mass loading effluent limitation.
[5] Applied as an annual average effluent limitation.
[6] Average Monthly Effluent Limitation

$$S_{\mathrm{AMEL}} = \frac{C_{D\,avg}}{0.079} + \frac{C_{C\,avg}}{0.012} \leq 1.0$$

$C_{D\ M\text{-}AVG}$ = average monthly diazinon effluent concentration in µg/L.
$C_{C\ M\text{-}AVG}$ = average monthly chlorpyrifos effluent concentration in µg/L.

[7] Maximum Daily Effluent Limitation

$$S_{\mathrm{MDEL}} = \frac{C_{D\,max}}{0.16} + \frac{C_{C\,max}}{0.025} \leq 1.0$$

$C_{D\ max}$ = maximum daily diazinon effluent concentration in µg/L.
$C_{C\ max}$ = maximum daily chlorpyrifos effluent concentration in µg/L.

[8] Interim effluent limitation in effect until 28 July 2022 or 28 July 2026, per compliance schedule.
[9] Final effluent limitation for discharges from 1 April through 30 September, effective 28 July 2022 or 28 July 2026.
[10] Final effluent limitation for discharges from 1 October through 31 March, effective 28 July 2022 or 28 July 2026.
[11] Not to be exceeded more than once in any 30-day period.
[12] Applied as a 7-day median effluent limitation.
[13] Applied as an instantaneous maximum effluent limitation.
[14] Median percent survival of three consecutive acute bioassays.
[15] Minimum percent survival for any one bioassay.
[16] There shall be no chronic toxicity in the effluent.

D. Compliance Summary

The Central Valley Water Board issued Administrative Civil Liability (ACL) Complaint R5-2013-0563 on 10 September 2013, which proposed to assess a civil liability of $3,000 against the Discharger for effluent violations of chloride, total suspended solids (TSS) percent removal, total recoverable iron, and total recoverable aluminum that occurred from the period of 1 December 2007 through 31 May 2013 under Orders R5-2008-0059, R5-2008-0059-01, and R5-2012-0031. The Discharger paid the mandatory minimum penalty of $3,000.

E. Planned Changes

The Discharger is in the process of upgrading and expanding the Facility's two-step MBR process that includes an aerated activated sludge process and a membrane separation process. Phase 1A construction of the tertiary treatment facilities (2.3 MGD) was completed on 1 July 2010. Phase 2, which expanded the tertiary treatment capacity of the Facility to 14.9 MGD, was completed in July 2015 and commissioning was completed in the spring of 2017. Phase 3 would increase the tertiary treatment capacity to 19.1 MGD, and full build-out (Phases 4 and 5) would increase the tertiary treatment capacity to 27.3 MGD. There is no specific time frame for initiation of Phase 3, which will depend on population growth in the service area. The Discharger previously conducted an antidegradation analysis and has requested approval for the full Phase 3 build-out discharge of 19.1 MGD.

III. APPLICABLE PLANS, POLICIES, AND REGULATIONS

The requirements contained in this Order are based on the requirements and authorities described in this section.

A. Legal Authorities

This Order serves as WDR's pursuant to article 4, chapter 4, division 7 of the California Water Code (commencing with section 13260). This Order is also issued pursuant to section 402 of the federal Clean Water Act (CWA) and implementing regulations adopted by the U.S. EPA and chapter 5.5, division 7 of the Water Code (commencing with section 13370). It shall serve as an NPDES permit for point source discharges from this Facility to surface waters.

B. California Environmental Quality Act (CEQA)

Under Water Code section 13389, this action to adopt an NPDES permit is exempt from the provisions of Chapter 3 of CEQA, (commencing with section 21100) of division 13 of the Public Resources Code.

C. State and Federal Laws, Regulations, Policies, and Plans

1. **Water Quality Control Plan.** Requirements of this Order specifically implement the applicable Water Quality Control Plans.

   a. **Basin Plan.** The Central Valley Water Board adopted a Water Quality Control Plan, Fourth Edition (Revised July 2016), for the Sacramento and San Joaquin River Basins (hereinafter Basin Plan) that designates beneficial uses, establishes water quality objectives, and contains implementation programs and policies to achieve those objectives for all waters addressed through the plan. Requirements in this Order implement the Basin Plan. In addition, the Basin Plan implements State Water Board Resolution 88-63, which established state policy that all waters, with certain exceptions, should be considered suitable or potentially suitable for municipal or domestic supply. Beneficial uses applicable to the San Joaquin River from the mouth of the Merced River to Vernalis are as follows:

Table F-4. Basin Plan Beneficial Uses

Discharge Point	Receiving Water Name	Beneficial Use(s)
001	San Joaquin River	Existing: Agricultural supply, including irrigation and stock watering (AGR); industrial process supply (PROC); water contact recreation, including canoeing and rafting (REC-1); non-contact water recreation (REC-2); warm freshwater habitat (WARM); warm and cold migration of aquatic organisms (MIGR); warm spawning, reproduction, and/or early development (SPWN), and wildlife habitat (WILD). Potential: Municipal and domestic water supply (MUN).

2. **National Toxics Rule (NTR) and California Toxics Rule (CTR).** U.S. EPA adopted the NTR on 22 December 1992, and later amended it on 4 May 1995 and 9 November 1999. About forty criteria in the NTR applied in California. On 18 May 2000, U.S. EPA adopted the CTR. The CTR promulgated new toxics criteria for California and, in addition, incorporated the previously adopted NTR criteria that were applicable in the state. The CTR was amended on 13 February 2001. These rules contain federal water quality criteria for priority pollutants.

3. **State Implementation Policy.** On 2 March 2000, the State Water Board adopted the *Policy for Implementation of Toxics Standards for Inland Surface Waters, Enclosed Bays,*

and Estuaries of California (State Implementation Policy or SIP). The SIP became effective on 28 April 2000, with respect to the priority pollutant criteria promulgated for California by the U.S. EPA through the NTR and to the priority pollutant objectives established by the Central Valley Water Board in the Basin Plan. The SIP became effective on 18 May 2000, with respect to the priority pollutant criteria promulgated by the U.S. EPA through the CTR. The State Water Board adopted amendments to the SIP on 24 February 2005, which became effective on 13 July 2005. The SIP establishes implementation provisions for priority pollutant criteria and objectives and provisions for chronic toxicity control. Requirements of this Order implement the SIP.

4. **Antidegradation Policy.** Federal regulation 40 C.F.R. section 131.12 requires that the state water quality standards include an Antidegradation Policy consistent with the federal policy. The State Water Board established California's Antidegradation Policy in State Water Board Resolution 68-16 ("*Statement of Policy with Respect to Maintaining High Quality of Waters in California*") (State Antidegradation Policy). The State Antidegradation Policy is deemed to incorporate the federal Antidegradation Policy where the federal policy applies under federal law. The State Antidegradation Policy requires that existing water quality be maintained unless degradation is justified based on specific findings. The Basin Plan implements, and incorporates by reference, both the State and federal Antidegradation Policies. The permitted discharge must be consistent with the antidegradation provision of 40 C.F.R. section 131.12 and the State Antidegradation Policy. The Central Valley Water Board finds this Order is consistent with the federal and State Water Board antidegradation regulations and policy.

5. **Anti-Backsliding Requirements.** Sections 402(o) and 303(d)(4) of the CWA and federal regulations at 40 C.F.R. section 122.44(l) restrict backsliding in NPDES permits. These anti-backsliding provisions require that effluent limitations in a reissued permit must be as stringent as those in the previous permit, with some exceptions in which limitations may be relaxed.

6. **Domestic Water Quality.** In compliance with Water Code section 106.3, it is the policy of the State of California that every human being has the right to safe, clean, affordable, and accessible water adequate for human consumption, cooking, and sanitary purposes. This Order promotes that policy by requiring discharges to meet maximum contaminant levels (MCL's) designed to protect human health and ensure that water is safe for domestic use.

7. **Endangered Species Act Requirements.** This Order does not authorize any act that results in the taking of a threatened or endangered species or any act that is now prohibited, or becomes prohibited in the future, under either the California Endangered Species Act (Fish and Game Code, §§ 2050 to 2097) or the Federal Endangered Species Act (16 U.S.C.A. §§ 1531 to 1544). This Order requires compliance with effluent limits, receiving water limits, and other requirements to protect the beneficial uses of waters of the state. The Discharger is responsible for meeting all requirements of the applicable Endangered Species Act.

8. **Emergency Planning and Community Right to Know Act.** Section 13263.6(a) of the Water Code, requires that *"the Regional Water Board shall prescribe effluent limitations as part of the waste discharge requirements of a POTW for all substances that the most recent toxic chemical release data reported to the state emergency response commission pursuant to section 313 of the Emergency Planning and Community Right to Know Act of 1986 (42 U.S.C. section 11023) (EPCRA) indicate as discharged into the*

POTW, for which the State Water Board or the Regional Water Board has established numeric water quality objectives, and has determined that the discharge is or may be discharged at a level which will cause, have the reasonable potential to cause, or contribute to, an excursion above any numeric water quality objective".

U.S EPA's Toxics Release Inventory (TRI) indicates that several pollutants were discharged to the Facility. Of these pollutants, numeric water quality objectives have been adopted for ammonia and nitrate in the Basin Plan. As detailed elsewhere in this Order, available effluent quality data indicate that effluent concentrations of ammonia and nitrate have a reasonable potential to cause or contribute to an excursion above numeric water quality objectives and effluent limitations for these pollutants are included in this Order.

9. **Storm Water Requirements.** U.S. EPA promulgated federal regulations for storm water on 16 November 1990 in 40 C.F.R. parts 122, 123, and 124. The NPDES Industrial Storm Water Program regulates storm water discharges from wastewater treatment facilities. Wastewater treatment plants are applicable industries under the storm water program and are obligated to comply with the federal regulations. The State Water Board Water Quality Order 2014-0057-DWQ, General Permit for Strom Water Discharges Associated with Industrial Activities (NPDES General Permit No. CAS000001), does not require facilities to obtain coverage if discharges of storm water are regulated under another individual or general NPDES permit adopted by the State Water Board or Regional Water Board (Finding I.B.20). All storm water at the Facility is captured and directed to the Facility headworks for treatment and disposal under this Order. Therefore, coverage under the General Storm Water Permit is not required.

D. Impaired Water Bodies on CWA 303(d) List

1. Under section 303(d) of the 1972 CWA, states, territories and authorized tribes are required to develop lists of water quality limited segments. The waters on these lists do not meet water quality standards, even after point sources of pollution have installed the minimum required levels of pollution control technology. On 26 June 2015 U.S. EPA gave final approval to California's 2012 section 303(d) List of Water Quality Limited Segments. The Basin Plan references this list of Water Quality Limited Segments (WQLS's), which are defined as "…*those sections of lakes, streams, rivers or other fresh water bodies where water quality does not meet (or is not expected to meet) water quality standards even after the application of appropriate limitations for point sources* (40 C.F.R. part 130, et seq.)." The Basin Plan also states, "*Additional treatment beyond minimum federal standards will be imposed on dischargers to [WQLS's]. Dischargers will be assigned or allocated a maximum allowable load of critical pollutants so that water quality objectives can be met in the segment*." The listing for the San Joaquin River (Merced River to Tuolumne River) includes: alpha-BHC, boron, chlorpyrifos, DDE, DDT, electrical conductivity, group A pesticides, mercury, temperature, and unknown toxicity.

2. **Total Maximum Daily Loads (TMDL's).** Table F-5, below, identifies the 303(d) listings and TMDL's. This permit includes water quality-based effluent limitations (WQBEL's) that are consistent with the assumptions and considerations of the applicable waste load allocations (WLA's) in the 2004 TMDL for salinity and boron and the 2007 TMDL for diazinon and chlorpyrifos.

Table F-5. 303(d) List for the San Joaquin River (Merced River to Tuolumne River)

Pollutant	Potential Sources	TMDL Status
alpha-BHC	Source Unknown	Planned for Completion (2022)
Boron	Source Unknown	Adopted and Effective (8 February 2007)
Chlorpyrifos	Source Unknown	Adopted and Effective (1 January 2007)
DDE	Source Unknown	Planned for Completion (2011)
DDT	Source Unknown	Planned for Completion (2011)
Electrical Conductivity	Source Unknown	Planned for Completion (2021)
Group A Pesticides	Source Unknown	Planned for Completion (2011)
Mercury	Source Unknown	Planned for Completion (2012)
Temperature	Source Unknown	Planned for Completion (2021)
Unknown Toxicity	Source Unknown	Planned for Completion (2019)

3. The 303(d) listings and TMDL's have been considered in the development of the Order. A pollutant-by-pollutant evaluation of each pollutant of concern is described in section IV.C.3 of this Fact Sheet.

E. Other Plans, Policies and Regulations – Not Applicable

IV. RATIONALE FOR EFFLUENT LIMITATIONS AND DISCHARGE SPECIFICATIONS

Effluent limitations and toxic and pretreatment effluent standards established pursuant to sections 301 (Effluent Limitations), 302 (Water Quality Related Effluent Limitations), 304 (Information and Guidelines), and 307 (Toxic and Pretreatment Effluent Standards) of the CWA and amendments thereto are applicable to the discharge.

The CWA mandates the implementation of effluent limitations that are as stringent as necessary to meet water quality standards established pursuant to state or federal law [33 U.S.C., §1311(b)(1)(C); 40 C.F.R. § 122.44(d)(1)]. NPDES permits must incorporate discharge limits necessary to ensure that water quality standards are met. This requirement applies to narrative criteria as well as to criteria specifying maximum amounts of particular pollutants. Pursuant to federal regulations, 40 C.F.R. section 122.44(d)(1)(i), NPDES permits must contain limits that control all pollutants that "*are or may be discharged at a level which will cause, have the reasonable potential to cause, or contribute to an excursion above any state water quality standard, including state narrative criteria for water quality*." Federal regulations, 40 C.F.R. section 122.44(d)(1)(vi), further provide that *"[w]here a state has not established a water quality criterion for a specific chemical pollutant that is present in an effluent at a concentration that causes, has the reasonable potential to cause, or contributes to an excursion above a narrative criterion within an applicable State water quality standard, the permitting authority must establish effluent limits.*"

The CWA requires point source dischargers to control the amount of conventional, non-conventional, and toxic pollutants that are discharged into the waters of the United States. The control of pollutants discharged is established through effluent limitations and other requirements in NPDES permits. There are two principal bases for effluent limitations in the Code of Federal Regulations: 40 C.F.R. section 122.44(a) requires that permits include applicable technology-based limitations and standards; and 40 C.F.R. section 122.44(d) requires that permits include WQBEL's to attain and maintain applicable numeric and narrative water quality criteria to protect

the beneficial uses of the receiving water where numeric water quality objectives have not been established. The Basin Plan at page IV-17.00, contains an implementation policy, *Policy for Application of Water Quality Objectives* that specifies that the Central Valley Water Board "*will, on a case-by-case basis, adopt numerical limitations in orders which will implement the narrative objectives.*" This Policy complies with 40 C.F.R. section 122.44(d)(1). With respect to narrative objectives, the Central Valley Water Board must establish effluent limitations using one or more of three specified sources, including: (1) U.S. EPA's published water quality criteria, (2) a proposed state criterion (i.e., water quality objective) or an explicit state policy interpreting its narrative water quality criteria (i.e., the Central Valley Water Board's "Policy for Application of Water Quality Objectives")(40 C.F.R. § 122.44(d)(1)(vi)(A), (B) or (C)), or (3) an indicator parameter.

The Basin Plan includes numeric site-specific water quality objectives and narrative objectives for toxicity, chemical constituents, discoloration, radionuclides, and tastes and odors. The narrative toxicity objective states: "*All waters shall be maintained free of toxic substances in concentrations that produce detrimental physiological responses in human, plant, animal, or aquatic life.*" (Basin Plan at III-8.00) The Basin Plan states that material and relevant information, including numeric criteria, and recommendations from other agencies and scientific literature will be utilized in evaluating compliance with the narrative toxicity objective. The narrative chemical constituents objective states that waters shall not contain chemical constituents in concentrations that adversely affect beneficial uses. At minimum, "…*water designated for use as domestic or municipal supply (MUN) shall not contain concentrations of chemical constituents in excess of the MCL's*" in Title 22 of CCR. The Basin Plan further states that, to protect all beneficial uses, the Central Valley Water Board may apply limits more stringent than MCL's. The narrative tastes and odors objective states: "*Water shall not contain taste- or odor-producing substances in concentrations that impart undesirable tastes or odors to domestic or municipal water supplies or to fish flesh or other edible products of aquatic origin, or that cause nuisance, or otherwise adversely affect beneficial uses.*"

A. Discharge Prohibitions

1. **Prohibition III.A (No discharge or application of waste other than that described in this Order).** This prohibition is based on Water Code section 13260 that requires filing of a ROWD before discharges can occur. The Discharger submitted a ROWD for the discharges described in this Order; therefore, discharges not described in this Order are prohibited.

2. **Prohibition III.B (No bypasses or overflow of untreated wastewater, except under the conditions at 40 C.F.R section 122.41(m)(4)).** As stated in section I.G of Attachment D, Standard Provisions, this Order prohibits bypass from any portion of the treatment facility. Federal regulations, 40 C.F.R. section 122.41(m), define "bypass" as the intentional diversion of waste streams from any portion of a treatment facility. This section of the federal regulations, 40 C.F.R. section 122.41(m)(4), prohibits bypass unless it is unavoidable to prevent loss of life, personal injury, or severe property damage. In considering the Regional Water Board's prohibition of bypasses, the State Water Board adopted a precedential decision, Order WQO 2002-0015, which cites the federal regulations, 40 C.F.R. section 122.41(m), as allowing bypass only for essential maintenance to assure efficient operation.

3. **Prohibition III.C (No controllable condition shall create a nuisance).** This prohibition is based on Water Code section 13050 that requires water quality objectives established for the prevention of nuisance within a specific area. The Basin Plan prohibits conditions that create a nuisance.

4. **Prohibition III.D (No inclusion of pollutant free wastewater shall cause improper operation of the Facility's systems).** This prohibition is based on 40 C.F.R. section 122.41 et seq. that requires the proper design and operation of treatment facilities.

5. **Prohibition III.E (No discharge of hazardous waste).** This prohibition is based on CCR, Title 22, section 66261.1 et seq, that prohibits discharge of hazardous waste.

B. Technology-Based Effluent Limitations

1. Scope and Authority

Section 301(b) of the CWA and implementing U.S. EPA permit regulations at 40 C.F.R. section 122.44 require that permits include conditions meeting applicable technology-based requirements at a minimum, and any more stringent effluent limitations necessary to meet applicable water quality standards. The discharge authorized by this Order must meet minimum federal technology-based requirements based on Secondary Treatment Standards at 40 C.F.R. part 133.

Regulations promulgated in 40 C.F.R. section 125.3(a)(1) require technology-based effluent limitations for municipal Dischargers to be placed in NPDES permits based on Secondary Treatment Standards or Equivalent to Secondary Treatment Standards.

The Federal Water Pollution Control Act Amendments of 1972 (PL 92-500) established the minimum performance requirements for POTW's [defined in section 304(d)(1)]. Section 301(b)(1)(B) of that Act requires that such treatment works must, as a minimum, meet effluent limitations based on secondary treatment as defined by the U.S. EPA Administrator.

Based on this statutory requirement, U.S. EPA developed secondary treatment regulations, which are specified in 40 C.F.R. part 133. These technology-based regulations apply to all municipal wastewater treatment plants and identify the minimum level of effluent quality attainable by secondary treatment in terms of BOD_5, TSS and pH.

2. Applicable Technology-Based Effluent Limitations

a. **BOD_5 and TSS.** Federal regulations at 40 C.F.R. part 133 establish the minimum weekly and monthly average level of effluent quality attainable by secondary treatment for BOD_5 and TSS. In addition, 40 C.F.R. section 133.102, in describing the minimum level of effluent quality attainable by secondary treatment, states that the 30-day average percent removal shall not be less than 85 percent. This Order contains a limitation requiring an average of 85 percent removal of BOD_5 and TSS over each calendar month. This Order requires WQBEL's that are equal to or more stringent than the secondary technology-based treatment described in 40 C.F.R part 133 (see section IV.C.3 of the Fact Sheet for a discussion on pathogens, which includes WQBEL's for BOD_5 and TSS).

b. **Flow.** The Facility is designed to provide a tertiary level of treatment for up to a design average daily discharge flow of 14.9 MGD. The full buildout at Phase 3 will have a design capacity of 19.1 MGD. Therefore, this Order includes average daily discharge flow limit of 14.9 MGD, effective until completion of the Phase 3 upgrade project. Upon completion of the project and compliance with Special Provision VI.C.6.b of this Order, the Discharger may be permitted to discharge up to 19.1 MGD.

c. **pH.** The secondary treatment regulations at 40 C.F.R. part 133 also require that pH be maintained between 6.0 and 9.0 standard units. This Order requires more stringent WQBEL's for pH to comply with the Basin Plan's water quality objectives for pH.

Summary of Technology-based Effluent Limitations
Discharge Point 001

Table F-6. Summary of Technology-based Effluent Limitations

Parameter	Units	Effluent Limitations				
		Average Monthly	Average Weekly	Maximum Daily	Instantaneous Minimum	Instantaneous Maximum
Flow	MGD	--	--	14.9[1]	--	--
	MGD	--	--	19.1[2]	--	--
Conventional Pollutants						
Biochemical Oxygen Demand (5-day @ 20°C)[3]	mg/L	30	45	--	--	--
	lbs/day[4]	3,700	5,600	--	--	--
	lbs/day[5]	4,800	7,200			
	% Removal	85	--	--	--	--
pH[2]	standard units	--	--	--	6.0	9.0
Total Suspended Solids[2]	mg/L	30	45	--	--	--
	lbs/day[4]	3,700	5,600	--	--	--
	lbs/day[5]	4,800	7,200			
	% Removal	85	--	--	--	--

1 Effective until the Discharger demonstrates compliance with Special Provision VI.C.6.b of this Order, the average daily discharge flow shall not exceed 14.9 MGD.
2 Effective upon compliance with Special Provision VI.C.6.b of this Order, the average daily discharge flow shall not exceed 19.1 MGD.
3 More stringent WQBEL's are applicable to the discharge and are included in this Order, as described further in section IV.C.3 of this Fact Sheet.
4 Based on an average daily discharge flow of 14.9 MGD. Effective immediately until Executive Officer's written approval of flow increase (Special Provisions VI.C.6.b).
5 Based on an average daily discharge flow of 19.1 MGD. Effective upon Executive Officer's written approval of flow increase (Special Provisions VI.C.6.b).

C. Water Quality-Based Effluent Limitations (WQBEL's)

1. Scope and Authority

CWA section 301(b) and 40 C.F.R. section 122.44(d) require that permits include limitations more stringent than applicable federal technology-based requirements where necessary to achieve applicable water quality standards. This Order contains requirements, expressed as a technology equivalence requirement, more stringent than secondary treatment requirements that are necessary to meet applicable water quality standards. The rationale for these requirements, which consist of tertiary treatment or equivalent requirements, is discussed in section IV.C.3.

Section 122.44(d)(1)(i) of 40 C.F.R. requires that permits include effluent limitations for all pollutants that are or may be discharged at levels that have the reasonable potential to cause or contribute to an exceedance of a water quality standard, including numeric

and narrative objectives within a standard. Where reasonable potential has been established for a pollutant, but there is no numeric criterion or objective for the pollutant, WQBEL's must be established using: (1) U.S. EPA criteria guidance under CWA section 304(a), supplemented where necessary by other relevant information; (2) an indicator parameter for the pollutant of concern; or (3) a calculated numeric water quality criterion, such as a proposed state criterion or policy interpreting the state's narrative criterion, supplemented with other relevant information, as provided in section 122.44(d)(1)(vi).

The process for determining reasonable potential and calculating WQBEL's, when necessary, is intended to protect the designated uses of the receiving water, as specified in the Basin Plan, and achieve applicable water quality objectives and criteria that are contained in other state plans and policies, or any applicable water quality criteria contained in the CTR and NTR.

2. Applicable Beneficial Uses and Water Quality Criteria and Objectives

The Basin Plan designates beneficial uses, establishes water quality objectives, and contains implementation programs and policies to achieve those objectives for all waters addressed through the plan. In addition, the Basin Plan implements State Water Board Resolution No. 88-63, which established state policy that all waters, with certain exceptions, should be considered suitable or potentially suitable for municipal or domestic supply.

The Basin Plan on page II-1.00 states: "*Protection and enhancement of existing and potential beneficial uses are primary goals of water quality planning…*" and with respect to disposal of wastewaters states that "...*disposal of wastewaters is [not] a prohibited use of waters of the State; it is merely a use which cannot be satisfied to the detriment of beneficial uses.*"

The federal CWA section 101(a)(2), states: "*it is the national goal that wherever attainable, an interim goal of water quality which provides for the protection and propagation of fish, shellfish, and wildlife, and for recreation in and on the water be achieved by 1 July 1983.*" Federal Regulations, developed to implement the requirements of the CWA, create a rebuttable presumption that all waters be designated as fishable and swimmable. Federal Regulations, 40 C.F.R sections 131.2 and 131.10, require that all waters of the State regulated to protect the beneficial uses of public water supply, protection and propagation of fish, shell fish and wildlife, recreation in and on the water, agricultural, industrial and other purposes including navigation. Federal Regulations, 40 C.F.R. section 131.3(e), defines existing beneficial uses as those uses actually attained after 28 November 1975, whether or not they are included in the water quality standards. Federal Regulation, 40 C.F.R. section 131.10 requires that uses be obtained by implementing effluent limitations, requires that all downstream uses be protected and states that in no case shall a state adopt waste transport or waste assimilation as a beneficial use for any waters of the United States.

a. **Receiving Water and Beneficial Uses.** The Discharger discharges to the San Joaquin River, which is a major tributary to the Sacramento – San Joaquin Delta that drains approximately 8.7 million acres in California's Central Valley. The San Joaquin River watershed is bounded by the Sierra Nevada Mountains on the east, the Coast Ranges on the west, the Delta to the north, and the Tulare Lake Basin to the south. From its source in the Sierra Nevada Mountains, the San Joaquin River flows southwesterly to the center of the San Joaquin Valley near Mendota, where it

turns northwesterly to eventually join the Sacramento River in the Delta. The main stem of the entire San Joaquin River is about 300 miles long and drains approximately 13,500 square miles. Most of the valley floor is agricultural land, with an agricultural history dating to the 1870's. Prior to major water developments, the San Joaquin River supported a superlative Chinook salmon fishery (State Water Board, 1987). The San Joaquin River is also an important drinking water source for the state, as San Joaquin River flows account for approximately 15% of the total flows in the Delta.

The hydrology of the San Joaquin River is complex and highly managed through the operation of dams, diversions, and supply conveyances. Water development has fragmented the watershed and greatly altered the natural hydrograph of the river. Runoff from the Sierra Nevada and foothills is regulated and stored in a series of reservoirs on the east side of the San Joaquin River. There are 57 major reservoirs in the basin that have the capacity to store 1,000 acre-feet of water. Operation of these reservoirs greatly influence the water quantity and quality of the San Joaquin River.

Most of the natural flows from the Upper San Joaquin River and its headwaters are diverted at the Friant Dam to irrigate crops outside the San Joaquin River Basin. Water is imported to the basin from the southern Delta via the Delta-Mendota Canal to replace flows that are diverted out of the basin to the south. Some water in the Delta-Mendota Canal is delivered directly to the west side of the San Joaquin River for agricultural supply, but the majority of Delta-Mendota Canal water is delivered to the Mendota Pool. Storage in the Mendota Pool is augmented by groundwater pumping from the adjacent aquifer and from incidental upstream releases from Millerton Lake. Water from the Mendota Pool is released to the Lower San Joaquin River, and various agricultural users divert water between the Mendota Pool and Sack Dam. Most or all of the remaining flow in the San Joaquin River is diverted at Sack Dam. As a result, the San Joaquin River downstream of the Sack Dam and upstream of Bear Creek frequently has little or no flow except during flood flows. During non-flood flow periods this reach of the San Joaquin River flows intermittently and is composed of groundwater accretions and agricultural return flows. The San Joaquin River downstream of Bear Creek once again becomes a permanent stream that flows all year.

The mean annual flow for the San Joaquin River Basin, as measured at a gaging station near Vernalis, was a little over 3 million acre-feet per year between 1930 and 1998. The lowest annual flow, of approximately 4,000 acre-feet per year, occurred in 1977, and the highest annual flow, of over 15 million acre-feet occurred in 1983. The 15-year moving average of the mean annual flow is used by various agencies to identify the long-term trends that may be obscured by the annual variability of the flow. The moving average in the 1950's decreased significantly following the completion of Friant Dam, and in the late 1990's, the moving average was approximately 800,000 acre-feet per year.

Refer to III.C.1 above for a complete description of the receiving water and beneficial uses.

b. **Effluent and Ambient Background Data.** The RPA, as described in section IV.C.3 of this Fact Sheet, was based on effluent monitoring data from the Phase 1A Facility. Although data from the Phase 2 Facility is not available, treatment

technologies in the Phase 1A and Phase 2 Facilities are similar, so effluent quality is expected to be similar. The Discharger did not discharge tertiary treated wastewater to the San Joaquin River during the term of Order R5-2012-0031, so tertiary effluent data collected from the Phase 1A Facility when discharging to land was used to characterize the effluent for this permit renewal. The effluent monitoring was conducted at previous Monitoring Location EFF-001B between August 2014 and September 2015, which includes two effluent priority pollutant scans (August and October 2014). Monthly receiving water priority pollutant monitoring was conducted from April through December 2015.

c. **Assimilative Capacity/Mixing Zone – Not Applicable**

d. **Conversion Factors.** The CTR contains aquatic life criteria for arsenic, cadmium, chromium III, chromium VI, copper, lead, nickel, silver, and zinc which are presented in dissolved concentrations. U.S. EPA recommends conversion factors to translate dissolved concentrations to total concentrations. The default U.S. EPA conversion factors contained in Appendix 3 of the SIP were used to convert the applicable dissolved criteria to total recoverable criteria.

e. **Hardness-Dependent CTR Metals Criteria.** The CTR and the NTR contain water quality criteria for seven metals that vary as a function of hardness. The lower the hardness, the lower the water quality criteria. The metals with hardness-dependent criteria include cadmium, copper, chromium III, lead, nickel, silver, and zinc.

This Order has established the criteria for hardness-dependent metals based on the hardness of the receiving water (actual ambient hardness) as required by the SIP[1] and the CTR[2]. The SIP and the CTR require the use of “receiving water” or “actual ambient” hardness, respectively, to determine effluent limitations for these metals. The CTR requires that the hardness values used shall be consistent with the design discharge conditions for design flows and mixing zones[3]. Design flows for aquatic life criteria include the 1Q10 and the 7Q10[4]. This section of the CTR also indicates that the design conditions should be established such that the appropriate criteria are not exceeded more than once in a 3 year period on average[5]. The CTR requires that when mixing zones are allowed, the CTR criteria apply at the edge of the mixing zone, otherwise the criteria apply throughout the water body including at the point of discharge[6]. The CTR does not define the term “ambient,” as applied in the regulations. Therefore, the Central Valley Water Board has considerable discretion to consider upstream and downstream ambient conditions when establishing the appropriate water quality criteria that fully complies with the CTR and SIP.

i. **Summary Findings**

The ambient hardness for the San Joaquin River is represented by the data in Figure F-1, below, which shows ambient hardness ranging from 84 mg/L to

[1] The SIP does not address how to determine the hardness for application to the equations for the protection of aquatic life when using hardness-dependent metals criteria. It simply states, in Section 1.2, that the criteria shall be properly adjusted for hardness using the hardness of the receiving water.
[2] The CTR requires that, for waters with a hardness of 400 mg/L (as $CaCO_3$), or less, the actual ambient hardness of the surface water must be used (40 C.F.R. § 131.38(c)(4)).
[3] 40 C.F.R. §131.3(c)(4)(ii)
[4] 40 C.F.R. §131.38(c)(2)(iii) Table 4
[5] 40 C.F.R. §131.38(c)(2)(iii) Table 4, notes 1 and 2
[6] 40 C.F.R. §131.38(c)(2)(i)

510 mg/L based on collected ambient data from September 2013 through August 2016. Given the high variability in ambient hardness values, there is no single hardness value that describes the ambient receiving water for all possible scenarios (e.g., minimum, maximum). Because of this variability, staff has determined that based on the ambient hardness concentrations measured in the receiving water, the Central Valley Water Board has discretion to select ambient hardness values within the range of 84 mg/L (minimum) up to 510 mg/L (maximum). Staff recommends that the Central Valley Water Board use the ambient hardness values shown in Table F-7 for the following reasons:

(a) Using the ambient receiving water hardness values shown in Table F-7 will result in criteria and effluent limitations that ensure protection of beneficial uses under all ambient receiving water conditions.

(b) The Water Code mandates that the Central Valley Water Board establish permit terms that will ensure the reasonable protection of beneficial uses. In this case, using the lowest measured ambient hardness to calculate effluent limitations is not required to protect beneficial uses. Calculating effluent limitations based on the lowest measured ambient hardness is not required by the CTR or SIP, and is not reasonable as it would result in overly conservative limits that will impart substantial costs to the Discharger and ratepayers without providing any additional protection of beneficial uses. In compliance with applicable state and federal regulatory requirements, after considering the entire range of ambient hardness values, Board staff has used the ambient hardness values shown in Table F-7 to calculate proposed effluent limitations for hardness-dependent metals. Proposed effluent limitations are protective of beneficial uses under all flow conditions.

(c) Using an ambient hardness that is higher than the minimum observed ambient hardness will result in limits that may allow increased metals to be discharged to the river, but such discharge is allowed under the State Antidegradation Policy (State Water Board Resolution 68-16). The Central Valley Water Board finds that this degradation is consistent with the Antidegradation Policy (see antidegradation findings in section IV.D.4 of the Fact Sheet). The Antidegradation policy requires the Discharger to meet waste discharge requirements that will result in the best practicable treatment or control (BPTC) of the discharge necessary to assure that: a) a pollution or nuisance will not occur, and b) the highest water quality consistent with maximum benefit to the people of the State will be maintained.

(d) Using the ambient hardness values shown in Table F-7 is consistent with the CTR and SIP's requirements for developing metals criteria.

Table F-7. Summary of CTR Criteria for Hardness-dependent Metals

CTR Metals	Ambient Hardness (mg/L)[1,2]	CTR Criteria (µg/L, total recoverable)[3]	
		acute	chronic
Copper	130	18	12
Chromium III	130	2200	260

CTR Metals	Ambient Hardness (mg/L)[1,2]	CTR Criteria (µg/L, total recoverable)[3]	
		acute	chronic
Cadmium	121 (acute) 130 (chronic)	5.6	3.0
Lead	103	85	3.3
Nickel	130	590	65
Silver	71	2.3	--
Zinc	130	150	150

[1] The ambient hardness values in this table represent actual observed receiving water hardness measurements from the dataset shown in Figure F-1.

[2] The CTR's hardness dependent metals criteria equations vary differently depending on the metal, which results in differences in the range of ambient hardness values that may be used to develop effluent limitations that are protective of beneficial uses and comply with CTR criteria for all ambient flow conditions.

[3] Metal criteria rounded to two significant figures in accordance with the CTR (40 C.F.R. section 131.38(b)(2)).

ii. **Background**

The State Water Board provided direction regarding the selection of hardness in two precedential Water Quality Orders; WQO 2008-0008 for the City of Davis Wastewater Treatment Plant (Davis Order) and WQO 2004-0013 for the Yuba City Wastewater Treatment Plant (Yuba City Order). The State Water Board recognized that the SIP and the CTR do not discuss the manner in which hardness is to be ascertained, thus regional water boards have considerable discretion in determining ambient hardness so long as the selected value is protective of water quality criteria under the given flow conditions. (Davis Order, p.10). The State Water Board explained that it is necessary that, "*The [hardness] value selected should provide protection for all times of discharge under varying hardness conditions.*" (Yuba City Order, p. 8). The Davis Order also provides that, "*Regardless of the hardness used, the resulting limits must always be protective of water quality criteria under all flow conditions.*" (Davis Order, p. 11)

The equation describing the total recoverable regulatory criterion, as established in the CTR, is as follows:

CTR Criterion = WER x ($e^{m[\ln(H)]+b}$) (Equation 1)

Where:

H = ambient hardness (as $CaCO_3$) [1]

WER = water-effect ratio

m, b = metal- and criterion-specific constants

The direction in the CTR regarding hardness selection is that it must be based on ambient hardness and consistent with design discharge conditions for

[1] For this discussion, all hardness values are expressed in mg/L as $CaCO_3$.

design flows and mixing zones. Consistent with design discharge conditions and design flows means that the selected "design" hardness must result in effluent limitations under design discharge conditions that do not result in more than one exceedance of the applicable criteria in a 3 year period.[1] Design flows for aquatic life criteria include the lowest 1-day flow with an average reoccurrence frequency of once in 10 years (1Q10) and the lowest average 7 consecutive day flow with an average reoccurrence frequency of once in 10 years (7Q10). The 1Q10 and 7Q10 San Joaquin River flows are 229 cfs and 238 cfs, respectively.

iii. **Ambient Conditions**

The ambient receiving water hardness varied from 14 mg/L to 510 mg/L, based on 114 samples from January 2010 through November 2016 (see Figure F-1).

Figure F-1. Observed Ambient Hardness Concentrations 14 mg/L – 510 mg/L

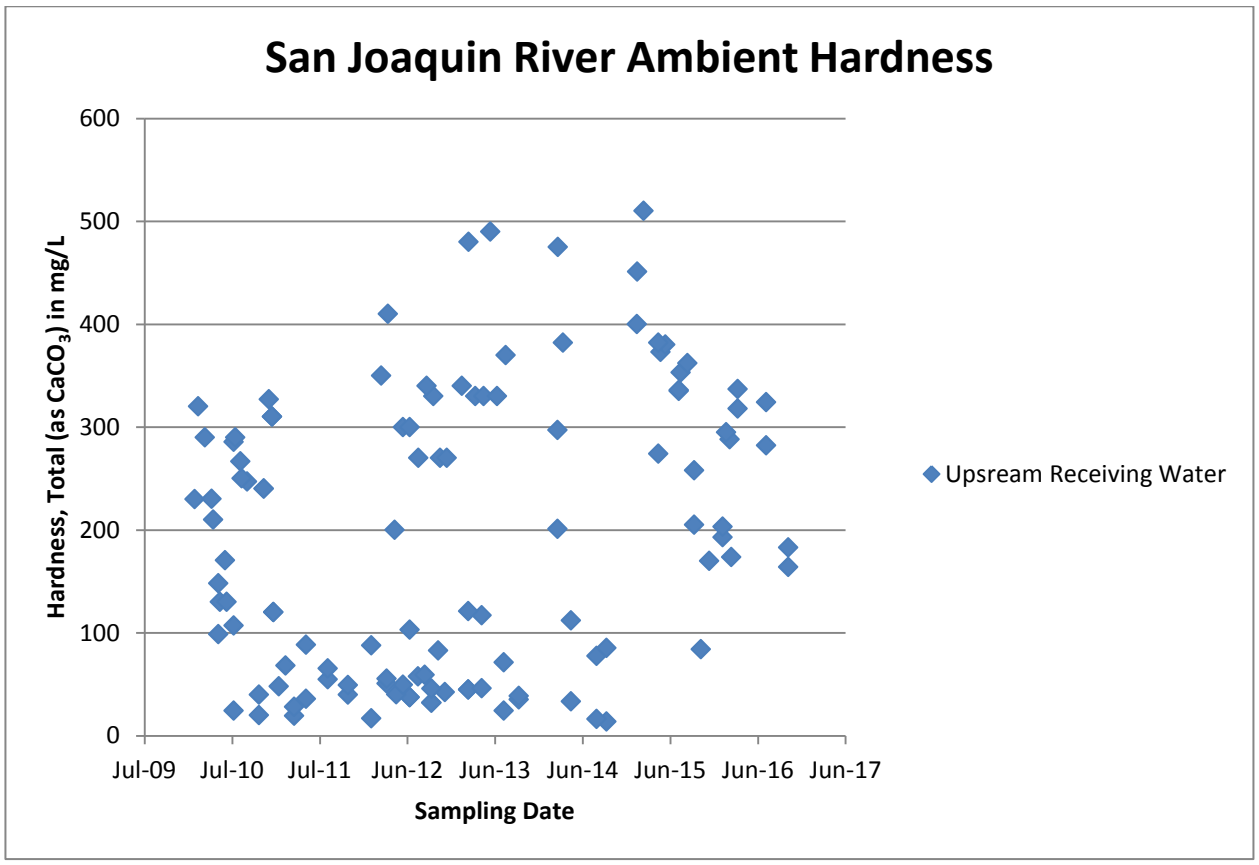

In this analysis, the entire range of ambient hardness concentrations shown in Figure F-1 were considered to determine the appropriate ambient hardness to calculate the CTR criteria and effluent limitations that are protective under all discharge conditions.

[1] 40 C.F.R. §131.38(c)(2)(iii) Table 4, notes 1 and 2

iv. **Approach to Derivation of Criteria**

As shown above, ambient hardness varies substantially. Because of the variation, there is no single hardness value that describes the ambient receiving water for all possible scenarios (e.g., minimum, maximum, mid-point). While the hardness selected must be hardness of the ambient receiving water, selection of an ambient receiving water hardness that is too high would result in effluent limitations that do not protect beneficial uses. Also, the use of minimum ambient hardness would result in criteria that are protective of beneficial uses, but such criteria may not be representative considering the wide range of ambient conditions.

Reasonable worst-case ambient conditions. To determine whether a selected ambient hardness value results in effluent limitations that are fully protective while complying with federal regulations and state policy, staff have conducted an analysis considering varying ambient hardness and flow conditions. To do this, the Central Valley Water Board has ensured that the receiving water hardness and criteria selected for effluent limitations are protective under "reasonable-worst case ambient conditions." These conditions represent the receiving water conditions under which derived effluent limitations would ensure protection of beneficial uses under all ambient flow and hardness conditions.

Reasonable worst-case ambient conditions:

(a) "Low receiving water flow." CTR design discharge conditions (1Q10 and 7Q10) have been selected to represent reasonable worst case receiving water flow conditions.

(b) "High receiving water flow (maximum receiving water flow)." This additional flow condition has been selected consistent with the Davis Order, which required that the hardness selected be protective of water quality criteria under all flow conditions.

(c) "Low receiving water hardness." The minimum receiving water hardness condition of 84 mg/L was selected to represent the reasonable worst case receiving water hardness.

(d) "Background ambient metal concentration at criteria." This condition assumes that the metal concentration in the background receiving water is equal to CTR criteria (upstream of the Facility's discharge). Based on data in the record, this is a design condition that has not occurred in the receiving water and is used in this analysis to ensure that limits are protective of beneficial uses even in the situation where there is no assimilative capacity.

Iterative approach. An iterative analysis has been used to select the ambient hardness to calculate the criteria that will result in effluent limitations that protect beneficial uses under all flow conditions.

The iterative approach is summarized in the following algorithm and described below in more detail.

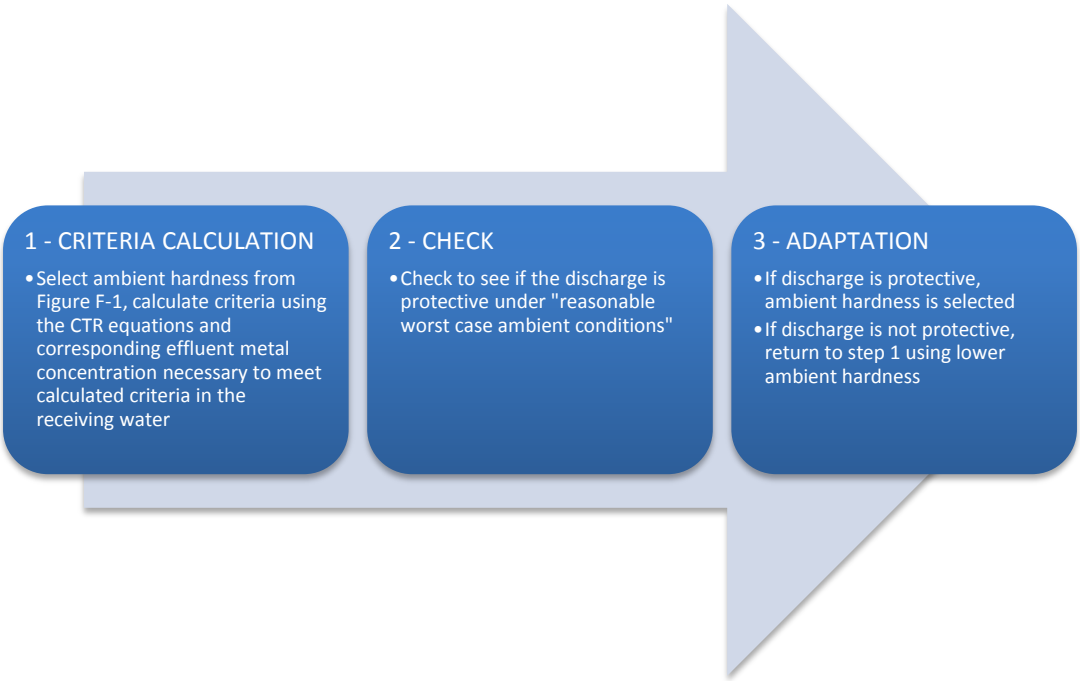

(a) CRITERIA CALCULATION. CTR criteria are calculated using the CTR equations based on actual measured ambient hardness sample results, starting with the maximum observed ambient hardness of 510 mg/L. Effluent metal concentrations necessary to meet the above calculated CTR criteria in the receiving water are calculated in accordance with the SIP.[1] This should not be confused with an effluent limit. Rather, it is the Effluent Concentration Allowance (ECA), which is synonymous with the waste load allocation defined by U.S. EPA as "*a definition of effluent water quality that is necessary to meet the water quality standards in the receiving water*."[2] If effluent limits are found to be needed, the limits are calculated to enforce the ECA considering effluent variability and the probability basis of the limit.

(b) CHECK. U.S. EPA's simple mass balance equation[3] is used to evaluate if discharge at the computed ECA is protective. Resultant downstream metal concentrations are compared with downstream calculated CTR criteria under reasonable worst-case ambient conditions.

(c) ADAPT. If step 2 results in:

(1) Receiving water metal concentration that complies with CTR criteria under reasonable worst-case ambient conditions, then the hardness value is selected.

(2) Receiving water metal concentration greater than CTR criteria, then return to bullet 1, selecting a lower ambient hardness value.

[1] SIP Section 1.4.B, Step 2, provides direction for calculating the Effluent Concentration Allowance.
[2] U.S. EPA Technical Support Document for Water Quality-based Toxics Control (TSD), pg. 96.
[3] U.S. EPA NPDES Permit Writers' Handbook (EPA 833-K-10-001 September 2010, pg. 6-24)

The CTR's hardness dependent metals criteria equations contain metal-specific constants, so the criteria vary depending on the metal. Therefore, steps 1 through 3 must be repeated separately for each metal until ambient hardness values are determined that will result in criteria and effluent limitations that comply with the CTR and protect beneficial uses for all metals.

v. **Results of Iterative Analysis**

The above iterative analysis for each CTR hardness-dependent metal results in the selected ambient hardness values shown in Table F-7, above. Using these hardness values to calculate criteria, which are actual sample results collected in the receiving water, will result in effluent limitations that are protective under all ambient flow conditions. Zinc and silver are used as examples below to illustrate the results of the analysis. Tables F-8 and F-9 below summarize the numeric results of the three step iterative approach for zinc and silver. As shown in the example tables, an ambient hardness value of 84 mg/L was used for zinc and silver in the CTR equations to derive criteria and effluent limitations. Then, under the "check" step, worst-case ambient receiving water conditions are used to test whether discharge results in compliance with CTR criteria and protection of beneficial uses.

The results of the above analysis, summarized in the tables below, show that the ambient hardness values selected using the three-step iterative process results in protective effluent limitations that achieve CTR criteria under all flow conditions. Tables F-8 and F-9, below, summarize the critical flow conditions. However, the analysis evaluated all flow conditions to ensure compliance with the CTR criteria at all times.

Table F-8. Verification of CTR Compliance for Zinc

Receiving water hardness used to compute effluent limitations				130 mg/L
Effluent Concentration Allowance (ECA) for Zinc[1]				150 µg/L
	Downstream Ambient Concentrations Under Worst-Case Ambient Receiving Water Conditions			**Complies with CTR Criteria?**
	Hardness	**CTR Criteria (µg/L)**	**Ambient Zinc Concentration[3] (µg/L)**	
1Q10	29	42	37	Yes
7Q10	29	41	37	Yes
Max receiving water flow	14	23	23	Yes

[1] The ECA defines effluent quality necessary to meet the CTR criteria in the receiving water. There is no effluent limitation for zinc as it demonstrates no reasonable potential.

[2] This concentration is derived using worst-case ambient conditions. These conservative assumptions will ensure that the receiving water always complies with CTR criteria. Concentration values rounded to two significant figures for comparison to the ECA.

Table F-9. Verification of CTR Compliance for Silver

Receiving water hardness used to compute effluent limitations				71 mg/L
Effluent Concentration Allowance (ECA) for Silver[1]				2.3 µg/L
	Downstream Ambient Concentrations Under Worst-Case Ambient Receiving Water Conditions			Complies with CTR Criteria?
	Hardness	CTR Criteria (µg/L)	Ambient Silver Concentration[2] (µg/L)	
1Q10	29	0.49	0.38	Yes
7Q10	29	0.47	0.37	Yes
Max receiving water flow	14	0.14	0.14	Yes

[1] The ECA defines effluent quality necessary to meet the CTR criteria in the receiving water. There is no effluent limitation for silver as it demonstrates no reasonable potential.

[2] This concentration is derived using worst-case ambient conditions. These conservative assumptions will ensure that the receiving water always complies with CTR criteria.

3. Determining the Need for WQBEL's

a. **Constituents with No Reasonable Potential.** Central Valley Water Board staff conducted RPA's for nearly 200 constituents, including the 126 U.S. EPA priority toxic pollutants. All RPA's are included in the administrative record and a summary of the constituents of concern is provided in Attachment G. WQBEL's are not included in this Order for constituents that do not demonstrate reasonable potential to cause or contribute to an in-stream excursion above an applicable water quality objective; however, monitoring for those pollutants is established in this Order as required by the SIP. If the results of effluent monitoring demonstrate reasonable potential, this Order may be reopened and modified by adding an appropriate effluent limitation.

Most constituents with no reasonable potential are not discussed in this Order. This section only provides the rationale for the RPA's for the following constituents of concern that were found to have no reasonable potential after assessment of the data:

i. **Aluminum**

Aluminum is the third most abundant element in the earth's crust and is ubiquitous in both soils and aquatic sediments. When mobilized in surface waters, aluminum has been shown to be toxic to various fish species. However, the potential for aluminum toxicity in surface waters is directly related to the chemical form of aluminum present, and the chemical form is highly dependent on water quality characteristics that ultimately determine the mechanism of aluminum toxicity. Surface water characteristics, including pH, temperature, colloidal material, fluoride and sulfate concentrations, and total organic carbon, all influence aluminum speciation and its subsequent bioavailability to aquatic life. Calcium [hardness] concentrations in surface water may also reduce aluminum toxicity by competing with monomeric aluminum (Al^{3+}) binding to negatively charged fish gills.

(a) **WQO.** The California Division of Drinking Water (DDW) has established Secondary MCL's to assist public drinking water systems in managing their drinking water for public welfare considerations such as taste, color, and odor. The Secondary MCL for aluminum is 200 µg/L for protection of the MUN beneficial use. Title 22 requires compliance with Secondary MCL's on an annual average basis.

The Code of Federal Regulations promulgated criteria for priority toxic pollutants for California's surface waters as part of CTR section 131.38, including metals criteria. However, aluminum criteria were not promulgated as part of the CTR. Absent numeric aquatic life criteria for aluminum, WQBEL's in the Central Valley Region's NPDES permits are based on the Basin Plans' narrative toxicity objective. The Basin Plan's *Policy for Application of Water Quality Objectives* requires the Central Valley Water Board to consider, "*on a case-by-case basis, direct evidence of beneficial use impacts, all material and relevant information submitted by the discharger and other interested parties, and relevant numerical criteria and guidelines developed and/or published by other agencies and organizations. In considering such criteria, the Board evaluates whether the specific numerical criteria which are available through these sources and through other information supplied to the Board, are relevant and appropriate to the situation at hand and, therefore, should be used in determining compliance with the narrative objective*." Relevant information includes, but is not limited to (1) U.S. EPA Ambient Water Quality Criteria (NAWQC) and subsequent Correction, (2) site-specific conditions of the San Joaquin River, the receiving water, and (3) site-specific aluminum studies conducted by dischargers within the Central Valley Region. (Basin Plan, p. IV.-17.00; see also, 40 C.F.R 122.44(d)(vi).)

U.S. EPA NAWQC. U.S. EPA recommended the NAWQC aluminum acute criterion at 750 µg/L based on test waters with a pH of 6.5 to 9.0. U.S. EPA also recommended the NAWQC aluminum chronic criterion at 87 µg/L based on the following two toxicity tests. All test waters contained hardness at 12 mg/L as $CaCO_3$.

(1) Acute toxicity tests at various aluminum doses were conducted in various acidic waters (pH 6.0 – 6.5) on 159- and 160-day old striped bass. The 159-day old striped bass showed no mortality in waters with pH at 6.5 and aluminum doses at 390 µg/L, and the 160-day old striped bass showed 58% mortality at a dose of 174.4 µg/L in same pH waters. However, the 160-day old striped bass showed 98% mortality at an aluminum dose of 87.2 µg/L in waters with pH at 6.0, which is U.S. EPA's basis for the 87 µg/L chronic criterion. The varied results draw into question this study and the applicability of the NAWQC chronic criterion of 87 µg/L.

(2) Chronic toxicity effects on 60-day old brook trout were evaluated in circumneutral pH waters (6.5-6.9 pH) in five cells at various aluminum doses (4, 57, 88, 169, and 350 µg/L). Chronic evaluation started upon hatching of eyed eggs of brook trout, and their weight and length were measured after 45 days and 60 days. The 60-day old brook trout showed 24% weight loss at 169 µg/L of aluminum and

4% weight loss at 88 µg/L of aluminum, which is the basis for U.S. EPA's chronic criteria. Though this test study shows chronic toxic effects of 4% reduction in weight after exposure for 60-days, the chronic criterion is based on 4-day exposure; so again, the applicability of the NAWQC chronic criterion of 87 µg/L is questionable.

Site-specific Conditions. U.S. EPA advises that a water effects ratio (WER) may be more appropriate to better reflect the actual toxicity of aluminum to aquatic organisms when the pH and hardness conditions of the receiving water are not similar to that of the test conditions. In April 2005, the Discharger completed a Phase I WER study for aluminum, and on 11 November 2005, submitted the results in its *Aluminum Water-Effect Ratio Study Plan*. The Phase I WER study consisted of range-finding toxicity tests, in which the NOEC, LOEC, and EC_{50}[1] were determined for the species *Daphnia magna, Ceriodaphnia dubia*, and *Oncorhynchus mykiss*. For this initial range-finding test, side-by-side testing with laboratory water was not conducted. However, to obtain an estimate of the potential WER for the Facility's effluent, the EC_{50} values determined for the site water were divided by the Species Mean Acute Value (SMAV) available in the aluminum criteria document according to U.S. EPA's streamlined WER procedure[2]. According to the U.S. EPA streamlined procedure, two WER's are determined by dividing site water WER's with both the laboratory dilution water EC_{50} and the SMAV; the final WER of the sample is the lesser of the two. The estimated WER's calculated using the SMAV's are presented in the table below:

Species	Site Water EC_{50} for Total Al (µg/L)	SMAV (µg/L Al)	WER
Daphnia magna	31604	38.2	827
Ceriodaphnia dubia	>11900[1]	1.9	6263
Oncorhynchus mykiss	>34250[1]	10.39	3296

[1] The 2001 EPA streamlined procedures state that a "greater than" value for the EC_{50} in the site water is interpreted as "equal to" in calculating the WER.

The Modesto Phase I WER study is not sufficient to calculate a WER, however, the preliminary results confirm the conditions of the San Joaquin River are not similar to the U.S. EPA study conditions for the development of the recommended chronic criterion. The chronic criterion is overly stringent and is not appropriate to use to interpret the Basin Plan's narrative toxicity objective.

[1] The NOEC is the "no observed effect concentration", the LOEC is the "lowest observed effect concentration", and the EC_{50} is the concentration that caused an effect to 50% of the test organisms. See Attachment A for more detailed definitions.

[2] U.S. EPA. 2001. Streamlined Water-Effect Ratio Procedure for Discharges of Copper. Office of Water. EPA-822-R-01-005. March.

In addition, on 12 April 2007, the City of Manteca completed a Phase II aluminum WER study for the San Joaquin River near its discharge point, which is downstream of the City of Modesto. The Manteca Phase II WER study, which may be used to calculate a WER for the City of Manteca's discharge, indicated that a WER of 22.7 can be applied to the chronic criterion for aluminum (resulting in a chronic criterion of 22.7 x 87 µg/L = 1975 µg/L). Since the characteristics of the river (e.g., hardness and pH) near Manteca are similar to those near Modesto, the results of the Manteca WER study put into question the applicability of the very stringent chronic criterion recommended by the NAWQC for aluminum.

Based on best professional judgement considering the site-specific conditions of the receiving water (e.g., hardness and pH), the Modesto Phase I WER Study, and the Manteca Phase II WER Study, the Central Valley Water Board finds that the NAWQC chronic criterion for aluminum is overly stringent and should not be used to interpret the narrative toxicity objective for this discharge. Therefore, the U.S. EPA's NAWQC acute criterion for the protection of freshwater aquatic life, and DDW's Secondary MCL for aluminum were used to determine reasonable potential for aluminum.

Applicable WQO's. This Order implements the Secondary MCL of 200 µg/L as an annual average for the protection of MUN and implements the Basin Plan's narrative toxicity objective for the protection of aquatic life using an acute (1-hour) criterion and chronic (4-day) criterion of 750 µg/L based on U.S. EPA's NAWQC and the discussion above. Order R5-2012-0031 included effluent limitations for aluminum based on these objectives.

(b) **RPA Results.** For priority pollutants, the SIP dictates the procedures for conducting the RPA. Aluminum is not a priority pollutant. Therefore, the Central Valley Water Board is not restricted to one particular RPA method. Due to the site-specific conditions of the discharge, the Central Valley Water Board has used its judgment in determining the appropriate method for conducting the RPA for this non-priority pollutant constituent. The most stringent objective is the Secondary MCL, which is derived from human welfare considerations (e.g., taste, odor, laundry staining), not for toxicity. Secondary MCL's are drinking water standards contained in Title 22 of the California Code of Regulations. Title 22 requires compliance with these standards on an annual average basis, when sampling at least quarterly. To be consistent with how compliance with the standards is determined, the RPA was conducted based on the calendar year annual average effluent aluminum concentrations.

The maximum observed effluent annual average concentration was 29 µg/L based on three samples collected between August 2014 and September 2015. Effluent aluminum is consistently less than the concentrations in the receiving water and below the Secondary MCL and the NAWQC acute criterion. Therefore, the Central Valley Water Board finds the discharge does not have reasonable potential to cause or contribute to an exceedance in the receiving water and the Facility is adequately controlling the discharge of aluminum. Since the discharge does not demonstrate reasonable potential, effluent limitations for

aluminum have not been retained in this Order. Removal of these effluent limitations is in accordance with federal anti-backsliding regulations (see section IV.D.3 of the Fact Sheet).

ii. **Copper**

(a) **WQO.** The CTR includes hardness-dependent criteria for the protection of freshwater aquatic life for copper. These criteria for copper are presented in dissolved concentrations, as 1-hour acute criteria and 4-day chronic criteria. U.S. EPA recommends conversion factors to translate dissolved concentrations to total concentrations. Default U.S. EPA translators were used for the tertiary treated effluent and receiving water. As described in section IV.C.2.e of this Fact Sheet, the applicable acute and chronic criteria for copper in the effluent are 18 µg/L and 12 µg/L, respectively, as total recoverable. Order R5-2012-0031 included effluent limitations for copper based on the CTR criteria.

(b) **RPA Results.** The MEC for copper was 3.9 µg/L (as total recoverable) based on four samples collected between August 2014 and September 2015. The maximum observed upstream receiving water concentration was 5.8 µg/L (as total recoverable) based on nine samples collected between September 2013 and August 2016. Therefore, copper in the discharge does not exhibit reasonable potential to cause or contribute to an in-stream excursion above the CTR criteria for the protection of freshwater aquatic life and the effluent limitations for copper have not been retained in this Order. Removal of these effluent limitations is in accordance with federal anti-backsliding regulations (see section IV.D.3 of the Fact Sheet).

iii. **Diazinon and Chlorpyrifos**

(a) **WQO.** The Central Valley Water Board completed a TMDL for diazinon and chlorpyrifos in the San Joaquin River and amended the Basin Plan to include diazinon and chlorpyrifos WLA's and water quality objectives. The Basin Plan Amendment for the Control of Diazinon and Chlorpyrifos Runoff into the Lower San Joaquin River was adopted by the Central Valley Water Board on 21 October 2005 and became effective on 20 December 2006.

The amendment modified Basin Plan Chapter III (Water Quality Objectives) to establish site-specific numeric objectives for diazinon and chlorpyrifos in the San Joaquin River and identified the requirements to meet the additive formula already in Basin Plan Chapter IV (Implementation) for the additive toxicity of diazinon and chlorpyrifos.

The amendment states that "*The WLA's for all NPDES-permitted dischargers…shall not exceed the sum (S) of one (1) as defined below.*

$$S = \frac{C_d}{WQO_d} + \frac{C_c}{WQO_c} \leq 1.0$$

Where:

C_D = diazinon concentration in µg/L of point source discharge for WLA…
C_C = chlorpyrifos concentration in µg/L of point source discharge for the WLA…
WQO_d = acute or chronic diazinon water quality objective in µg/L.
WQO_c = acute or chronic chlorpyrifos water quality objective in µg/L.

Available samples collected within the applicable averaging period for the water quality objective will be used to determine compliance with the allocations and loading capacity. For purposes of calculating the sum (S) above, analytical results that are reported as 'non-detectable' concentrations are considered to be zero."

(b) **RPA Results.** Diazinon and chlorpyrifos data for the tertiary treated discharge is not available for the term of Order R5-2012-0031. However, due to the TMDL for diazinon and chlorpyrifos in the San Joaquin River, WQBEL's for these constituents are required. The TMDL WLA applies to all NPDES discharges to the Lower San Joaquin River and will serve as the basis for WQBEL's.

(c) **WQBEL's.** WQBEL's for diazinon and chlorpyrifos are required based on the TMDL for diazinon and chlorpyrifos for the Lower San Joaquin River. Therefore, this Order includes effluent limits calculated based on the WLA's contained in the TMDL, as follows:

(1) Average Monthly Effluent Limitation (AMEL)

$$S_{AMEL} = \frac{C_{D\ AVG}}{0.079} + \frac{C_{C\ AVG}}{0.012} \leq 1.0$$

$C_{D\text{-}avg}$ = average monthly diazinon effluent concentration in µg/L

$C_{C\text{-}avg}$ = average monthly chlorpyrifos effluent concentration in µg/L

(2) Average Weekly Effluent Limitation (AWEL)

$$S_{AWEL} = \frac{C_{D\ W-AVG}}{0.14} + \frac{C_{C\ W-AVG}}{0.021} \leq 1.0$$

$C_{D\ W\text{-}AVG}$ = average weekly diazinon effluent concentration in µg/L.

$C_{C\ W\text{-}AVG}$ = average weekly chlorpyrifos effluent concentration in µg/L.

(d) **Plant Performance and Attainability.** It is unlikely that chlorpyrifos and diazinon will be detected at concentrations exceeding applicable water quality objectives as sales of all non-agricultural uses of diazinon were banned on 31 December 2004 and sales of the majority of non-agricultural uses of chlorpyrifos were banned in December 2001. The Discharger does not add chlorpyrifos or diazinon to the treatment process. Therefore, the Central Valley Water Board concludes that immediate compliance with these effluent limitations is feasible.

iv. **Iron**

(a) **WQO.** The Secondary MCL – Consumer Acceptance Limit for iron is 300 µg/L, which is used to implement the Basin Plan's chemical constituent objective for the protection of municipal and domestic supply. Order R5-2012-0031 included an annual average effluent limitation of 300 µg/L based on the Secondary MCL.

(b) **RPA Results.** For priority pollutants, the SIP dictates the procedures for conducting the RPA. Iron is not a priority pollutant. Therefore, the Central Valley Water Board is not restricted to one particular RPA method. Due to the site-specific conditions of the discharge, the Central Valley Water Board has used its judgment in determining the appropriate method for conducting the RPA for this non-priority pollutant constituent. The most stringent objective is the Secondary MCL, which is derived from human welfare considerations (e.g., taste, odor, laundry staining), not for toxicity. Secondary MCL's are drinking water standards contained in Title 22 of the California Code of Regulations. Title 22 requires compliance with these standards on an annual average basis when sampling at least quarterly. To be consistent with how compliance with the standards is determined, the RPA was conducted based on the calendar year annual average effluent iron concentrations.

The maximum annual average effluent concentration for iron was 64 µg/L based on three samples collected between August 2014 and September 2015. Effluent iron is consistently less than the concentrations in the receiving water and below the Secondary MCL. Therefore, the Central Valley Water Board finds the discharge does not have reasonable potential to cause or contribute to an exceedance in the receiving water and the Facility is adequately controlling the discharge of iron. Since the discharge does not demonstrate reasonable potential, the effluent limitation for iron has not been retained in this Order. Removal of the effluent limitation is in accordance with federal anti-backsliding regulations (see section IV.D.3 of the Fact Sheet).

v. **Manganese**

(a) **WQO.** The Secondary MCL – Consumer Acceptance Limit for manganese is 50 µg/L, which is used to implement the Basin Plan's chemical constituent objective for the protection of municipal and domestic supply. Order R5-2012-0031 included an annual average effluent limitation of 50 µg/L based on the Secondary MCL.

(b) **RPA Results.** For priority pollutants, the SIP dictates the procedures for conducting the RPA. Manganese is not a priority pollutant. Therefore, the Central Valley Water Board is not restricted to one particular RPA method. Due to the site-specific conditions of the discharge, the Central Valley Water Board has used its judgment in determining the appropriate method for conducting the RPA for this non-priority pollutant constituent. The most stringent objective is the Secondary MCL, which is derived from human welfare considerations (e.g., taste, odor, laundry staining), not for toxicity. Secondary MCL's are drinking water standards contained in Title 22 of the California Code of Regulations. Title 22 requires

compliance with these standards on an annual average basis when sampling at least quarterly. To be consistent with how compliance with the standards is determined, the RPA was conducted based on the calendar year annual average effluent manganese concentrations.

The maximum annual average concentration for manganese was 12 µg/L based on three samples collected between August 2014 and September 2015. Effluent manganese is consistently less than the concentrations in the receiving water and below the Secondary MCL. Therefore, the Central Valley Water Board finds the discharge does not have reasonable potential to cause or contribute to an exceedance in the receiving water. Since the discharge does not demonstrate reasonable potential, the effluent limitation for manganese has not been retained in this Order. Removal of the effluent limitation is in accordance with federal anti-backsliding regulations (see section IV.D.3 of the Fact Sheet).

vi. **Molybdenum**

(a) **WQO.** Table III-1 of the Basin Plan identifies site-specific objectives for molybdenum in the San Joaquin River, from the mouth of the Merced River to Vernalis. The monthly mean concentration objective for molybdenum is identified as 10 µg/L. These objectives were established considering irrigated agricultural water quality goals for molybdenum. Order R5-2012-0031 included a maximum daily effluent limitation (MDEL) of 23 µg/L based on the Basin Plan objective.

(b) **RPA Results.** The maximum effluent molybdenum concentration was 5.3 µg/L (as total recoverable) based on three samples collected between August 2014 and September 2015. The maximum observed upstream receiving water concentration for molybdenum was 8.0 µg/L (as total recoverable) based on nine samples collected between September 2013 and August 2016. Therefore, molybdenum in the tertiary treated discharge does not exhibit reasonable potential to cause or contribute to an in-stream excursion above the Basin Plan objective. Since the discharge does not demonstrate reasonable potential, the effluent limitation for molybdenum has not been retained in this Order. Removal of this effluent limitation is in accordance with federal anti-backsliding regulations (see section IV.D.3 of the Fact Sheet).

b. **Constituents with Reasonable Potential.** The Central Valley Water Board finds that the discharge has a reasonable potential to cause or contribute to an in-stream excursion above a water quality standard for ammonia, BOD_5, mercury, nitrate plus nitrite, pH, salinity, total coliform organisms, and TSS. WQBEL's for these constituents are included in this Order. A summary of the RPA is provided in Attachment G and a detailed discussion of the RPA for each constituent is provided below.

i. **Ammonia**

(a) **WQO.** The 1999 U.S. EPA NAWQC for the protection of freshwater aquatic life for total ammonia (the "1999 Criteria"), recommends acute (1-hour average; criteria maximum concentration or CMC) standards based on pH and chronic (30-day average; criteria continuous

concentration or CCC) standards based on pH and temperature. U.S. EPA also recommends that no 4-day average concentration should exceed 2.5 times the 30-day CCC.

The U.S. EPA recently published national recommended water quality criteria for the protection of aquatic life from the toxic effects of ammonia in freshwater (the "2013 Criteria")[1]. The 2013 Criteria is an update to U.S. EPA's 1999 Criteria, and varies based on pH and temperature. Although the 2013 Criteria reflects the latest scientific knowledge on the toxicity of ammonia to certain freshwater aquatic life, including new toxicity data on sensitive freshwater mussels in the Family Unionidae, the species tested for development of the 2013 Criteria may not be present in some Central Valley waterways. The 2013 Criteria document therefore states that, "*unionid mussel species are not prevalent in some waters, such as the arid west …*" and provides that, "*In the case of ammonia, where a state demonstrates that mussels are not present on a site-specific basis, the recalculation procedure may be used to remove the mussel species from the national criteria dataset to better represent the species present at the site.*"

The Central Valley Water Board issued a 3 April 2014 *California Water Code section 13267 Order for Information: 2013 Final Ammonia Criteria for Protection of Freshwater Aquatic Life* (13267 Order) requiring the Discharger to either participate in an individual or group study to determine the presence of mussels or submit a method of compliance for complying with effluent limitations calculated assuming mussels present using the 2013 Criteria. The Discharger submitted a letter to the Central Valley Water Board indicating their participation in the Central Valley Clean Water Association Freshwater Collaborative Mussel Study. Studies are currently underway to determine how the latest scientific knowledge on the toxicity of ammonia reflected in the 2013 Criteria can be implemented in the Central Valley Region as part of a Basin Planning effort to adopt nutrient and ammonia objectives. Until the Basin Planning process is completed, the Central Valley Water Board will continue to implement the 1999 Criteria to interpret the Basin Plan's narrative toxicity objective. The 1999 NAWQC for the protection of freshwater aquatic life for total ammonia, recommends acute (1-hour average; criteria maximum concentration or CMC) standards based on pH and chronic (30-day average; criteria continuous concentration or CCC) standards based on pH and temperature. U.S. EPA also recommends that no 4-day average concentration should exceed 2.5 times the 30-day CCC. U.S. EPA found that as pH increased, both the acute and chronic toxicity of ammonia increased. Salmonids were more sensitive to acute toxicity effects than other species. However, while the acute toxicity of ammonia was not influenced by temperature, it was found that invertebrates and young fish experienced increasing chronic toxicity effects with increasing temperature. Due to the potential presence of salmonids and early fish life

[1] *Aquatic Life Ambient Water Quality Criteria for Ammonia – Freshwater*, published August 2013 [EPA 822-R-13-001]

stages in the San Joaquin River, the recommended criteria for waters where salmonids and early life stages are present were used.

The maximum permitted effluent pH is 8.5, as the Basin Plan objective for pH in the receiving stream is the range of 6.5 to 8.5. In order to protect against the worst-case short-term exposure of an organism, a pH value of 8.5 was used to derive the acute criterion. The resulting acute criterion is 2.14 mg/L.

A chronic criterion was calculated for each day when paired temperature data and pH were measured using downstream receiving water data for temperature and pH. Rolling 30-day average criteria were calculated from downstream receiving water data using the criteria calculated for each day and the minimum observed 30-day average criterion was established as the applicable 30-day average chronic criterion, or 30-day CCC. The most stringent 30-day CCC was 2.65 mg/L (as N). The 4-day average concentration is derived in accordance with the U.S. EPA criterion as 2.5 times the 30-day CCC. Based on the 30-day CCC of 2.65 mg/L (as N), the 4-day average concentration that should not be exceeded is 6.62 mg/L (as N).

(b) **RPA Results.** The Facility is a POTW that treats domestic wastewater. Untreated domestic wastewater contains ammonia in concentrations that, without treatment, would be harmful to fish and would violate the Basin Plan narrative toxicity objective if discharged to the receiving water. Reasonable potential therefore exists and effluent limitations are required.

Federal regulations at 40 C.F.R. section 122.44(d)(1)(i) requires that, "*Limitations must control all pollutants or pollutant parameters (either conventional, nonconventional, or toxic pollutants) which the Director determines are or may be discharged at a level which will cause, have the reasonable potential to cause, or contribute to an excursion above any State water quality standard, including State narrative criteria for water quality*." For priority pollutants, the SIP dictates the procedures for conducting the RPA. Ammonia is not a priority pollutant. Therefore, the Central Valley Water Board is not restricted to one particular RPA method. Due to the site-specific conditions of the discharge, the Central Valley Water Board has used professional judgment in determining the appropriate method for conducting the RPA for this non-priority pollutant constituent.

U.S. EPA's September 2010 NPDES Permit Writer's Manual, page 6-30, states, "*State implementation procedures might allow, or even require, a permit writer to determine reasonable potential through a qualitative assessment process without using available facility-specific effluent monitoring data or when such data are not available…A permitting authority might also determine that WQBEL's are required for specific pollutants for all facilities that exhibit certain operational or discharge characteristics (e.g., WQBEL's for pathogens in all permits for POTW's discharging to contact recreational waters).*" U.S. EPA's TSD also recommends that factors other than effluent data should be considered in the RPA, "*When determining whether or not a discharge causes, has the*

reasonable potential to cause, or contributes to an excursion of a numeric or narrative water quality criterion for individual toxicants or for toxicity, the regulatory authority can use a variety of factors and information where facility-specific effluent monitoring data are unavailable. These factors also should be considered with available effluent monitoring data." With regard to POTW's, U.S. EPA recommends that, "*POTW's should also be characterized for the possibility of chlorine and ammonia problems*." (TSD, p. 50)

Nitrification is a biological process that converts ammonia to nitrite and nitrite to nitrate. Denitrification is a process that converts nitrate to nitrite or nitric oxide and then to nitrous oxide or nitrogen gas, which is then released to the atmosphere. The Facility utilizes biological nutrient removal, which nitrifies and denitrifies the wastewater. Inadequate or incomplete nitrification may result in the discharge of ammonia to the receiving stream. Ammonia is known to cause toxicity to aquatic organisms in surface waters. Discharges of ammonia in concentrations that produce detrimental physiological responses to human, plant, animal, or aquatic life would violate the Basin Plan narrative toxicity objective. Inadequate or incomplete nitrification creates the potential for ammonia to be discharged and provides the basis for the discharge to have a reasonable potential to cause or contribute to an in-stream excursion above the NAWQC. Therefore, the Central Valley Water Board finds the discharge has reasonable potential for ammonia and WQBEL's are required.

(c) **WQBEL's.** The Central Valley Water Board calculates WQBEL's in accordance with SIP procedures for non-CTR constituents, and ammonia is a non-CTR constituent. The SIP procedure assumes a 4-day averaging period for calculating the long-term average discharge condition (LTA). However, U.S. EPA recommends modifying the procedure for calculating permit limits for ammonia using a 30-day averaging period for the calculation of the LTA corresponding to the 30-day CCC. Therefore, while the LTA's corresponding to the acute and 4-day chronic criteria were calculated according to SIP procedures, the LTA corresponding to the 30-day CCC was calculated assuming a 30-day averaging period. The lowest LTA representing the acute, 4-day CCC, and 30-day CCC is then selected for deriving the AMEL and the AWEL. The remainder of the WQBEL calculation for ammonia was performed according to the SIP procedures. This Order contains an AMEL and AWEL for ammonia of 0.80 mg/L and 1.7 mg/L, respectively, based on the NAWQC.

(d) **Plant Performance and Attainability.** The MEC for ammonia was 0.46 mg/L based on 15 samples collected between August 2014 and September 2015, which is less than the applicable WQBEL's. The tertiary facilities are designed to fully nitrify the wastewater and immediate compliance with the ammonia limits is feasible.

ii. **Mercury**

(a) **WQO.** The current NAWQC for protection of freshwater aquatic life, continuous concentration, for mercury is 0.77 µg/L (30-day average,

chronic criteria). The CTR contains a human health criterion (based on a threshold dose level causing neurological effects in infants) of 0.050 µg/L for waters from which both water and aquatic organisms are consumed. Both values are controversial and subject to change. In 40 C.F.R. part 131, U.S. EPA acknowledges that the human health criteria may not be protective of some aquatic or endangered species and that "…*more stringent mercury limits may be determined and implemented through use of the State's narrative criterion.*" In the CTR, U.S. EPA reserved the mercury criteria for freshwater and aquatic life and may adopt new criteria at a later date.

(b) **RPA Results.** The MEC for mercury was 0.0011 µg/L based on four samples collected between August 2014 and September 2015. The maximum observed concentration of mercury in the upstream receiving water was 0.0042 µg/L based on nine samples collected between September 2013 and August 2016. Mercury bioaccumulates in fish tissue and, therefore, the discharge of mercury to the receiving water may contribute to exceedances of the narrative toxicity objective and impact beneficial uses. The San Joaquin River has been listed as an impaired water body pursuant to CWA section 303(d) because of mercury and the discharge must not cause or contribute to increased mercury levels.

(c) **WQBEL's.** Order R5-2012-0031 contained an annual mercury mass-loading effluent limitation of 1.16 lbs/year based on the 303(d) listing of the San Joaquin River. The mass-loading effluent limitation of 1.16 lbs/year is retained in this Order. This limitation ensures the mercury loading is maintained at the current level until a TMDL can be established and U.S. EPA develops mercury standards that are protective of human health. If U.S. EPA develops new water quality standards for mercury, this permit may be reopened and the effluent limitations adjusted.

(d) **Plant Performance and Attainability.** Based on available effluent mercury data, the Central Valley Water Board concludes that immediate compliance with the annual mercury mass-loading effluent limitation is feasible.

iii. **Nitrate and Nitrite**

(a) **WQO.** DDW has adopted Primary MCL's for the protection of human health for nitrate and nitrite that are equal to 10 mg/L and 1.0 mg/L (measured as nitrogen), respectively. DDW has also adopted a Primary MCL of 10 mg/L for the sum of nitrate and nitrite, measured as nitrogen.

U.S. EPA has developed a Primary MCL and an MCL goal of 1.0 mg/L for nitrite (measured as nitrogen). For nitrate, U.S. EPA has developed Drinking Water Standards (10 mg/L as Primary MCL) and NAWQC for protection of human health (10 mg/L for non-cancer health effects).

(b) **RPA Results.** The Facility is a POTW that treats domestic wastewater. Untreated domestic wastewater contains ammonia in concentrations that, if untreated, will be harmful to fish and will violate the Basin Plan's narrative toxicity objective. This Order, therefore, requires removal of ammonia (i.e., nitrification). Nitrification is a biological process that

converts ammonia to nitrate and nitrite, and will result in effluent nitrate concentrations above the Primary MCL for nitrate plus nitrite. Nitrate concentrations in a drinking water supply above the Primary MCL threatens the health of human fetuses and newborn babies by reducing the oxygen-carrying capacity of the blood (methemoglobinemia). Reasonable potential for nitrate and nitrite therefore exists and WQBEL's are required.

Federal regulations at 40 C.F.R. section 122.44(d)(1)(i) require that, "*Limitations must control all pollutants or pollutant parameters (either conventional, nonconventional, or toxic pollutants) which the Director determines are or may be discharged at a level which will cause, have the reasonable potential to cause, or contribute to an excursion above any State water quality standard, including State narrative criteria for water quality*." For priority pollutants, the SIP dictates the procedures for conducting the RPA. Nitrate and nitrite are not priority pollutants. Therefore, the Central Valley Water Board is not restricted to one particular RPA method. Due to the site-specific conditions of the discharge, the Central Valley Water Board has used professional judgment in determining the appropriate method for conducting the RPA for this non-priority pollutant constituent.

U.S. EPA's September 2010 NPDES Permit Writer's Manual, page 6-30, states, "*State implementation procedures might allow, or even require, a permit writer to determine reasonable potential through a qualitative assessment process without using available facility-specific effluent monitoring data or when such data are not available…A permitting authority might also determine that WQBEL's are required for specific pollutants for all facilities that exhibit certain operational or discharge characteristics (e.g., WQBEL's for pathogens in all permits for POTW's discharging to contact recreational waters)*." U.S. EPA's TSD also recommends that factors other than effluent data should be considered in the RPA, "*When determining whether or not a discharge causes, has the reasonable potential to cause, or contributes to an excursion of a numeric or narrative water quality criterion for individual toxicants or for toxicity, the regulatory authority can use a variety of factors and information where facility-specific effluent monitoring data are unavailable. These factors also should be considered with available effluent monitoring data*." With regard to POTW'S, U.S. EPA recommends that, "*POTW's should also be characterized for the possibility of chlorine and ammonia problems*." (TSD, p. 50)

The concentration of nitrogen in raw domestic wastewater is sufficiently high and the resultant treated wastewater has a reasonable potential to exceed or threaten to exceed the Primary MCL for nitrate plus nitrite unless the wastewater is treated for nitrogen removal. Therefore an effluent limit for nitrate plus nitrite is required. Denitrification is a process that converts nitrate to nitrite or nitric oxide and then to nitrous oxide or nitrogen gas, which is then released to the atmosphere. The Discharger currently uses nitrification/denitrification to remove ammonia, nitrite, and nitrate from the waste stream. Inadequate or incomplete denitrification

may result in the discharge of nitrate and/or nitrite to the receiving stream. Discharges of nitrate plus nitrite in concentrations that exceed the Primary MCL would violate the Basin Plan narrative chemical constituents objective. Although the Discharger denitrifies the discharge, inadequate or incomplete denitrification creates the potential for nitrate and nitrite to be discharged and provides the basis for the discharge to have a reasonable potential to cause or contribute to an in-stream excursion above the Primary MCL. Therefore, the Central Valley Water Board finds the discharge has reasonable potential for nitrate plus nitrite and WQBEL's are required.

(c) **WQBEL's.** This Order contains an AMEL and AWEL for nitrate plus nitrite in the tertiary treated discharge of 10 mg/L and 19 mg/L, respectively, based on the Basin Plan's narrative chemical constituents objective for protection of the MUN beneficial use. These effluent limitations are included in this Order to assure the treatment process adequately nitrifies and denitrifies the waste stream to protect the beneficial use of municipal and domestic supply.

(d) **Plant Performance and Attainability.** The MEC of 6.9 mg/L for nitrate plus nitrite is less than the applicable WQBEL's. Additionally, the Facility is designed to remove nitrate levels below the WQBEL's. Therefore, the Central Valley Water Board concludes that immediate compliance with these effluent limitations is feasible.

iv. **Pathogens**

(a) **WQO.** DDW has developed reclamation criteria, CCR, Division 4, Chapter 3 (Title 22), for the reuse of wastewater. Title 22 requires that for spray irrigation of food crops, parks, playgrounds, schoolyards, and other areas of similar public access, wastewater be adequately disinfected, oxidized, coagulated, clarified, and filtered, and that the effluent total coliform levels not exceed 2.2 MPN/100 mL as a 7-day median; 23 MPN/100 mL, not to be exceeded more than once in a 30-day period; and 240 MPN/100 mL, at any time.

Title 22 also requires that recycled water used as a source of water supply for non-restricted recreational impoundments be disinfected tertiary recycled water that has been subjected to conventional treatment. A non-restricted recreational impoundment is defined as *"…an impoundment of recycled water, in which no limitations are imposed on body-contact water recreational activities."* Title 22 is not directly applicable to surface waters; however, the Central Valley Water Board finds that it is appropriate to apply an equivalent level of treatment to that required by the DDW's reclamation criteria when the receiving water is used for irrigation of agricultural land and/or for contact recreation purposes. The stringent disinfection criteria of Title 22 are appropriate since the undiluted effluent may be used for the irrigation of food crops and/or for body contact water recreation. Coliform organisms are intended as an indicator of the effectiveness of the entire treatment train and the effectiveness of removing other pathogens.

(b) **RPA Results.** Raw domestic wastewater inherently contains human pathogens that threaten human health and life, and constitute a threatened pollution and nuisance under CWC section 13050 if discharged untreated to the receiving water. Reasonable potential for pathogens therefore exists and WQBEL's are required.

Federal regulations at 40 C.F.R. section 122.44(d)(1)(i) requires that, "*Limitations must control all pollutants or pollutant parameters (either conventional, nonconventional, or toxic pollutants) which the Director determines are or may be discharged at a level which will cause, have the reasonable potential to cause, or contribute to an excursion above any State water quality standard, including State narrative criteria for water quality*." For priority pollutants, the SIP dictates the procedures for conducting the RPA. Pathogens are not priority pollutants. Therefore, the Central Valley Water Board is not restricted to one particular RPA method. Due to the site-specific conditions of the discharge, the Central Valley Water Board has used professional judgment in determining the appropriate method for conducting the RPA for this non-priority pollutant constituent.

U.S. EPA's September 2010 NPDES Permit Writer's Manual, page 6-30, states, "*State implementation procedures might allow, or even require, a permit writer to determine reasonable potential through a qualitative assessment process without using available facility-specific effluent monitoring data or when such data are not available…A permitting authority might also determine that WQBEL's are required for specific pollutants for all facilities that exhibit certain operational or discharge characteristics (e.g., WQBEL's for pathogens in all permits for POTW's discharging to contact recreational waters)*." U.S. EPA's TSD also recommends that factors other than effluent data should be considered in the RPA, "*When determining whether or not a discharge causes, has the reasonable potential to cause, or contributes to an excursion of a numeric or narrative water quality criterion for individual toxicants or for toxicity, the regulatory authority can use a variety of factors and information where facility-specific effluent monitoring data are unavailable. These factors also should be considered with available effluent monitoring data*." (TSD, p.50).

The existing beneficial uses of the San Joaquin River include water contact recreation, and agricultural irrigation supply. Municipal and domestic supply is considered a potential beneficial use of the San Joaquin River. The discharge may, at times, receive less than 20:1 dilution. To protect these beneficial uses, the Central Valley Water Board finds that the wastewater must be disinfected and adequately treated to prevent disease. Although the Discharger provides disinfection, inadequate or incomplete disinfection creates the potential for pathogens to be discharged. Therefore, the Central Valley Water Board finds the discharge has reasonable potential for pathogens and WQBEL's are required.

(c) **WQBEL's.** In accordance with the requirements of Title 22, this Order includes effluent limitations for total coliform organisms of

2.2 MPN/100 mL as a 7-day median; 23 MPN/100 mL, not to be exceeded more than once in a 30-day period; and 240 MPN/100 mL as an instantaneous maximum.

The tertiary treatment process, or equivalent, is capable of reliably treating wastewater to a turbidity level of 2 nephelometric turbidity units (NTU) as a daily average. Failure of the filtration system such that virus removal is impaired would normally result in increased particles in the effluent, which result in higher effluent turbidity. Turbidity has a major advantage for monitoring filter performance. Coliform testing, by comparison, is not conducted continuously and requires several hours, to days, to identify high coliform concentrations. Therefore, to ensure compliance with the DDW recommended Title 22 disinfection criteria, weekly average specifications are impracticable for turbidity. This Order includes operational specifications for turbidity of 0.2 NTU, not to be exceeded more than 5 percent of the time within a 24-hour period; and 0.5 NTU as an instantaneous maximum.

This Order contains effluent limitations for BOD_5, total coliform organisms, and TSS in order to protect the beneficial uses of the receiving water. The Central Valley Water Board has previously considered the factors in Water Code section 13241 in establishing these requirements.

Final WQBEL's for BOD_5 and TSS are based on the technical capability of the tertiary process, which is necessary to protect the beneficial uses of the receiving water. BOD_5 is a measure of the amount of oxygen used in the biochemical oxidation of organic matter. The tertiary treatment standards for BOD_5 and TSS are indicators of the effectiveness of the tertiary treatment process. The principal design parameter for wastewater treatment plants is the daily BOD_5 and TSS loading rates and the corresponding removal rate of the system. The application of tertiary treatment processes results in the ability to achieve lower levels for BOD_5 and TSS than the secondary standards currently prescribed. Therefore, this Order requires AMEL's for BOD_5 and TSS of 10 mg/L, which is technically based on the capability of a tertiary system. In addition to the AMEL and AWEL, an MDEL for BOD_5 and TSS is included in the Order to ensure that the treatment works are not organically overloaded and operate in accordance with design capabilities.

(d) **Plant Performance and Attainability.** The Facility provides tertiary treatment and utilizes a UV disinfection system designed to achieve Title 22 criteria. Therefore, the Central Valley Water Board concludes that immediate compliance with these effluent limitations is feasible for tertiary treated discharges from the Facility.

v. **pH**

(a) **WQO.** The Basin Plan includes a water quality objective for surface waters (except for Goose Lake) that the *"…pH shall not be depressed below 6.5 nor raised above 8.5.*"

(b) **RPA Results.** Raw domestic wastewater inherently has variable pH. Additionally, some wastewater treatment processes can increase or

decrease wastewater pH, which if not properly controlled, would violate the Basin Plan's numeric objective for pH in the receiving water. Therefore, reasonable potential exists for pH and WQBEL's are required.

Federal regulations at 40 C.F.R. section 122.44(d)(1)(i) require that, "*Limitations must control all pollutants or pollutant parameters (either conventional, nonconventional, or toxic pollutants) which the Director determines are or may be discharged at a level which will cause, have the reasonable potential to cause, or contribute to an excursion above any State water quality standard, including State narrative criteria for water quality*." For priority pollutants, the SIP dictates the procedures for conducting the RPA. pH is not a priority pollutant. Therefore, the Central Valley Water Board is not restricted to one particular RPA method. Due to the site-specific conditions of the discharge, the Central Valley Water Board has used professional judgment in determining the appropriate method for conducting the RPA for this non-priority pollutant constituent.

U.S. EPA's September 2010 NPDES Permit Writer's Manual, page 6-30, states, "*State implementation procedures might allow, or even require, a permit writer to determine reasonable potential through a qualitative assessment process without using available facility-specific effluent monitoring data or when such data are not available…A permitting authority might also determine that WQBEL's are required for specific pollutants for all facilities that exhibit certain operational or discharge characteristics (e.g., WQBEL's for pathogens in all permits for POTW's discharging to contact recreational waters)*." U.S. EPA's TSD also recommends that factors other than effluent data should be considered in the RPA, "*When determining whether or not a discharge causes, has the reasonable potential to cause, or contributes to an excursion of a numeric or narrative water quality criterion for individual toxicants or for toxicity, the regulatory authority can use a variety of factors and information where facility-specific effluent monitoring data are unavailable. These factors also should be considered with available effluent monitoring data*." (TSD, p.50)

Based on 91 samples taken from August 2014 through September 2015, the maximum pH reported for the tertiary treated effluent was 7.9 and the minimum was 6.9. The Facility did not exceed the instantaneous pH effluent limitations. Although the Discharger has proper pH controls in place, the pH for the Facility's influent varies due to the nature of municipal sewage, which provides the basis for the discharge to have a reasonable potential to cause or contribute to an in-stream excursion above the Basin Plan's number objective for pH in the receiving water. Therefore, WQBEL's for pH are required in this Order.

(c) **WQBEL's.** Effluent limitations for pH of 6.5 as an instantaneous minimum and 8.5 as an instantaneous maximum are included in this Order based on protection of the Basin Plan objectives for pH.

(d) **Plant Performance and Attainability.** Effluent pH samples ranged from 6.9 to 7.9. Therefore, the Central Valley Water Board concludes that immediate compliance with effluent limitations is feasible.

vi. **Salinity**

(a) **WQO.** The Basin Plan contains a chemical constituent objective that incorporates state MCL's, contains a narrative objective, and contains numeric water quality objectives for certain specified water bodies for electrical conductivity, total dissolved solids, sulfate, and chloride. The U.S. EPA Ambient Water Quality Criteria for Chloride recommends acute and chronic criteria for the protection of aquatic life.

The San Joaquin River in the vicinity of the discharge is included on the 303(d) list as an impaired water body due to elevated electrical conductivity levels. Salinity levels in the Lower San Joaquin River are affected by both the salt loads and the quantity of flow in the river. The Central Valley Water Board completed a TMDL for salt and boron in the Lower San Joaquin River and amended the Basin Plan. *The Basin Plan Amendment for the Control of Salt and Boron Discharges into the Lower San Joaquin River* (LSJR Salt and Boron Control Program) was adopted by the Central Valley Water Board on 10 September 2004, by Resolution No. R5-2004-0108, and was approved by the State Water Board, the Office of Administrative Law, and U.S. EPA.

The LSJR Salt and Boron Control Program established salt load limits to achieve compliance at the Airport Way Bridge near Vernalis with salt and boron water quality objectives for the Lower San Joaquin River. The LSJR Salt and Boron Control Program also established a timeline for developing water quality objectives for the San Joaquin River upstream of Vernalis. The Lower San Joaquin Committee within CV-SALTS has developed a work plan to guide the completion of a Basin Plan Amendment for establishing salinity water quality objectives in the Lower San Joaquin River from the Merced River to Vernalis. The LSJR Salt and Boron Control Program's goal "*is to achieve compliance with salt and boron water quality objectives without restricting the ability of dischargers to export salt out of the San Joaquin River basin...The Regional Board encourages real-time water quality management and pollutant trading of waste load allocations, load allocations, and supply water allocations as a means for attaining salt and boron water quality objectives while maximizing the export of salts out of the LSJR watershed.*"

The LSJR Salt and Boron Control Program provided that "*Existing NPDES point source dischargers are low priority and subject to the compliance schedules for low priority discharges in Table IV-6… Low priority discharges have 16 years (Wet through Dry Water Year Types) and 20 years (Critical Water Year Types) from the effective date of the control program to comply with the TMDL allocations*." According to the TMDL report associated with the Basin Plan amendment, the two major NPDES permittees in this area (one of which is the Discharger) "*account for no more than two percent of the total salt load at Vernalis*."

Table F-10. Salinity Water Quality Criteria/Objectives

Parameter	Agricultural WQ Goal[1]	Secondary MCL[2]	Basin Plan	U.S. EPA NAWQC	Effluent	
					Average	Max

Parameter	Agricultural WQ Goal[1]	Secondary MCL[2]	Basin Plan	U.S. EPA NAWQC	Effluent	
					Average	Max
Boron (µg/L)	Varies	N/A	800 – 2,600	N/A	220[3]	220
Chloride (mg/L)	Varies	250, 500, 600	N/A	860 1-hr 230 4-day	189[4]	227
Electrical Conductivity (µmhos/cm) or Total Dissolved Solids (mg/L)	Varies	900, 1,600, 2,200 or 500, 1,000, 1,500	700/1,000[5] or N/A	N/A	1,121[4] or 659[4]	1,260 or 728
Sulfate (mg/L)	Varies	250, 500, 600	N/A	N/A	36[4]	40

1 Narrative chemical constituent objective of the Basin Plan. Procedures for establishing the applicable numeric limitation to implement the narrative objective can be found in the Policy for Application of Water Quality, Chapter IV, section 8 of the Basin Plan. However, the Basin Plan does not require improvement over naturally occurring background concentrations. In cases where the natural background concentration of a particular constituent exceeds an applicable water quality objective, the natural background concentration will be considered to comply with the objective.

2 The Secondary MCL's are for protection of public welfare and are stated as a recommended level, upper level, and a short-term maximum level.

3 Maximum monthly average for comparison with Basin Plan monthly mean water quality objective for boron.

4 Maximum calendar annual average.

5 Wasteload allocations for electrical conductivity in the San Joaquin River based on Bay-Delta Plan objectives at Airport Way in Vernalis, which includes a 14-day running average electrical conductivity of 700 µmhos/cm from 1 April – 31 August and a 14-day running average electrical conductivity of 1000 µmhos/cm from 1 September - 31 March.

(1) **Boron.** A TMDL is in place for the Lower San Joaquin River for boron and a Basin Plan amendment was adopted by the Central Valley Water Board in September 2004. The Basin Plan includes site-specific objectives for the San Joaquin River, mouth of Merced River to Vernalis, as described below.

Table F-11. Basin Plan[1] Water Quality Objectives for Boron – San Joaquin River, mouth of Merced River to Vernalis

Monthly Mean (µg/L)	Maximum Concentration (µg/L)	Time Period
800	2,000	15 March through 15 September
1,000	2,600	16 September through 14 March
1,300	--	Critical Year[2]

1 Table III-1, section III-3.0 of the Basin Plan.

2 Relative to unimpaired runoff to Delta based on 1922 – 1971 period (See Table IV-3 of the Basin Plan for more information).

(2) **Chloride.** The Secondary MCL for chloride is 250 mg/L, as a recommended level, 500 mg/L as an upper level, and 600 mg/L as a

short-term maximum. The NAWQC acute criterion for the protection of freshwater aquatic life for chloride is 860 mg/L and the chronic criterion is 230 mg/L.

(3) **Electrical Conductivity or Total Dissolved Solids.** The Secondary MCL for electrical conductivity is 900 µmhos/cm as a recommended level, 1600 µmhos/cm as an upper level, and 2200 µmhos/cm as a short-term maximum, or when expressed as TDS is 500 mg/L as a recommended level, 1,000 mg/L as an upper level, and 1,500 mg/L as a short-term maximum.

The LSJR Salt and Boron Control Program has established waste load allocations for NPDES permitted discharges that shall not exceed the State Water Board's 1995 Bay-Delta Plan salinity objectives at the Airport Way Bridge near Vernalis. The Bay-Delta Plan contains electrical conductivity water quality objectives for the San Joaquin River at Vernalis of 1,000 µmhos/cm between 1 September and 31 March, and 700 µmhos/cm between 1 April and 31 August (as a 14-day running average).

(4) **Sulfate.** The Secondary MCL for sulfate is 250 mg/L as a recommended level, 500 mg/L as an upper level, and 600 mg/L as a short-term maximum.

(b) **RPA Results**

(1) **Boron.** One effluent boron sample was collected between August 2014 and September 2015 with a result of 220 µg/L. This level does not exceed the Basin Plan site-specific objectives. The maximum observed upstream receiving water boron concentration was 680 µg/L based on eight samples collected between September 2013 and August 2016.

(2) **Chloride.** Chloride concentrations effluent ranged from 133 mg/L to 227 mg/L, with a maximum annual average of 189 mg/L, based on five samples collected between August 2014 and September 2015. The maximum observed annual average chloride concentration does not exceed the Secondary MCL and the MEC does not exceed the NAWQC chronic criterion for the protection of freshwater aquatic life. Upstream receiving water data for chloride is not available.

(3) **Electrical Conductivity or Total Dissolved Solids.** A review of the Discharger's monitoring reports shows a maximum observed annual average electrical conductivity of 1,120 µmhos/cm, with a range from 786 µmhos/cm to 1,260 µmhos/cm. These levels exceed the Secondary MCL and the Basin Plan site-specific objective for electrical conductivity.

Total dissolved solids concentrations in the effluent ranged from 532 mg/L to 728 mg/L, with a maximum annual average of 659 mg/L, based on five samples collected between August 2014 and September 2015. These levels exceed the Secondary MCL recommended level but not the upper level. The maximum observed upstream receiving water electrical conductivity was 2,480 µmhos/cm

based on 28 samples collected between September 2013 and August 2016. The maximum observed upstream receiving water total dissolved solids concentration was 1,500 mg/L based on 13 samples collected between September 2013 and August 2016.

(4) **Sulfate.** Sulfate concentrations in the effluent ranged from 32 mg/L to 40 mg/L, with a maximum annual average of 36 mg/L based on two samples collected between August 2014 and September 2015. These levels do not exceed the Secondary MCL. The maximum observed upstream receiving water sulfate concentration was 320 mg/L based on nine samples collected between September 2013 and August 2016.

(c) **WQBEL's.** The LSJR Salt and Boron Control Program established waste load allocations for NPDES permitted discharges to not exceed the Bay-Delta Plan South Delta electrical conductivity objectives for the San Joaquin River at Airport Way in Vernalis.

This Order includes final WQBELs for EC based on the WLAs in the Basin Plan in accordance with the Salt and Boron TMDL. An AMEL for EC of 700 µmhos/cm is required from 1 April – 30 September and an AMEL for EC of 1000 µmhos/cm is required from 1 October – 31 March. Per the TMDL, there are no WQBELs for boron, because compliance with the WLAs for EC will result in compliance with the boron objectives. Furthermore, effluent limitations are only applied for EC and is sufficient to control all salinity constituents with reasonable potential.

(d) **Plant Performance and Attainability.** Analysis of the effluent data shows that the MEC exceeds the WQBELs. Based on the sample results for the effluent, the limitations appear to put the Discharger in immediate non-compliance. New or modified control measures may be necessary in order to comply with the effluent limitations, and the new or modified control measures cannot be designed, installed and put into operation within 30 calendar days. The previous Order includes a compliance schedule with full compliance required by 28 July 2022, or 28 July 2026 in accordance with the TMDL. As discussed in section VII.B.7.a of this Fact Sheet, the compliance schedule has been carried forward in this Order.

The Central Valley Water Board has a current proposal for consideration of a Basin Plan Amendment, which would establish salinity water quality objectives in the Lower San Joaquin River from Merced River to Vernalis. The proposed Basin Plan Amendment would also modify the Salt and Boron TMDL to clarify that NPDES point source dischargers could participate in the real-time salinity management program in lieu of complying with the wasteload allocations. Therefore, this Order includes a reopener provision to modify the salinity requirements, in accordance with the proposed Basin Plan Amendment.

4. WQBEL Calculations

a. This Order includes WQBEL's for ammonia, BOD_5, chlorpyrifos, diazinon, electrical conductivity, mercury, nitrate plus nitrite, pH, total coliform organisms, and TSS. WQBEL's for BOD_5, electrical conductivity, mercury, pH, total coliform organisms

and TSS were determined as described in section IV.C.3, above. The general methodology for calculating WQBEL's for the remaining pollutants based on the different criteria/objectives is described in subsections IV.C.4.b through d, below. See Attachment H for the WQBEL calculations.

b. **Effluent Concentration Allowance.** For each water quality criterion/objective, the ECA is calculated using the following steady-state mass balance equation from section 1.4 of the SIP:

$$ECA = C + D(C - B) \quad \text{where } C>B, \text{ and}$$
$$ECA = C \quad \text{where } C \leq B$$

where:

ECA = effluent concentration allowance
D = dilution credit
C = the priority pollutant criterion/objective
B = the ambient background concentration.

According to the SIP, the ambient background concentration (B) in the equation above shall be the observed maximum with the exception that an ECA calculated from a priority pollutant criterion/objective that is intended to protect human health from carcinogenic effects shall use the arithmetic mean concentration of the ambient background samples. For ECA's based on MCL's, which implement the Basin Plan's chemical constituents objective and are applied as annual averages, an arithmetic mean is also used for B due to the long-term basis of the criteria.

c. **Aquatic Toxicity Criteria.** WQBEL's for priority pollutants based on acute and chronic aquatic toxicity criteria are calculated in accordance with section 1.4 of the SIP. The ECA's are converted to equivalent long-term averages (i.e., LTA_{acute} and $LTA_{chronic}$) using statistical multipliers and the lowest LTA is used to calculate the AMEL and MDEL using additional statistical multipliers. For non-priority pollutants, WQBEL's were calculated using similar procedures, except that an AWEL was determined utilizing multipliers based on a 98th percentile occurrence probability.

d. **Human Health Criteria.** WQBEL's for priority pollutants based on human health criteria are also calculated in accordance with section 1.4 of the SIP. The AMEL is set equal to the ECA and a statistical multiplier was used to calculate the MDEL.

For Primary MCL's that protect human health (e.g., nitrate plus nitrite), the AMEL is set equal to the ECA and a statistical multiplier was determined utilizing an AWEL/AMEL multiplier.

For Secondary MCL's that protect public welfare (e.g., taste, odor, and staining), WQBEL's were calculated by setting the LTA equal to the Secondary MCL and using the AMEL multiplier to set the AMEL. The AWEL was calculated from the AMEL using the MDEL/AMEL multiplier from Table 2 of the SIP.

$$AMEL = mult_{AMEL}\left[\min\left(\overbrace{M_A ECA_{acute}}^{LTA_{acute}}, M_C ECA_{chronic}\right)\right]$$

$$MDEL = mult_{MDEL}\left[\min\left(M_A ECA_{acute}, \underbrace{M_C ECA_{chronic}}_{LTA_{chronic}}\right)\right]$$

$$MDEL_{HH} = \left(\frac{mult_{MDEL}}{mult_{AMEL}}\right) AMEL_{HH}$$

where:
$mult_{AMEL}$ = statistical multiplier converting minimum LTA to AMEL
$mult_{MDEL}$ = statistical multiplier converting minimum LTA to MDEL
M_A = statistical multiplier converting acute ECA to LTA_{acute}
M_C = statistical multiplier converting chronic ECA to $LTA_{chronic}$

Summary of Water Quality-Based Effluent Limitations
Discharge Point 001

Table F-12. Summary of Water Quality-Based Effluent Limitations

Parameter	Units	Effluent Limitations				
		Average Monthly	Average Weekly	Maximum Daily	Instantaneous Minimum	Instantaneous Maximum
Conventional Pollutants						
Biochemical Oxygen Demand (5-day @ 20°C)	mg/L	10	15	20	--	--
	lbs/day[1]	1,200	1,900	2,500	--	--
	lbs/day[2]	1,600	2,400	3,200		
pH	standard units	--	--	--	6.5	8.5
Total Suspended Solids	mg/L	10	15	20	--	--
	lbs/day[1]	1,200	1,900	2,500	--	--
	lbs/day[2]	1,600	2,400	3,200		
Priority Pollutants						
Mercury, Total Recoverable	lbs/year	1.16[3]	--	--	--	--
Non-Conventional Pollutants						
Ammonia Nitrogen, Total (as N)	mg/L	0.80	1.7	--	--	--
	lbs/day[1]	99	210			
	lbs/day[2]	130	270	--	--	--
Chlorpyrifos	µg/L	[4]	[5]	--	--	--
Diazinon	µg/L	[4]	[5]	--	--	--
Electrical Conductivity @ 25°C (1 April – 31 May)	µmhos/cm	700[6]	--	--	--	--

Parameter	Units	Effluent Limitations				
		Average Monthly	Average Weekly	Maximum Daily	Instantaneous Minimum	Instantaneous Maximum
Electrical Conductivity @ 25°C (1 October – 31 March)	µmhos/cm	1,000[6]	--	--	--	--
Nitrate Plus Nitrite (as N)	mg/L	10	19	--	--	--
Total Coliform Organisms	MPN/100 mL	--	2.2[7]	23[8]	--	240

1 Based on a design average daily discharge flow of 14.9 MGD. Effective immediately and until Executive Officer's written approval of flow increase (Special Provision VI.C.6.b).

2 Based on a design average daily discharge flow of 19.1 MGD. Effective upon Executive Officer's written approval of flow increase (Special Provision VI.C.6.b).

3 The total calendar year annual mass discharge of total recoverable mercury shall not exceed 1.16 lbs.

4 Average Monthly Effluent Limitation

$$S_{AMEL} = \frac{C_{D\ M-AVG}}{0.079} + \frac{C_{C\ M-AVG}}{0.012} \leq 1.0$$

$C_{D\ M\text{-}AVG}$ = average monthly diazinon effluent concentration in µg/L.
$C_{C\ M\text{-}AVG}$ = average monthly chlorpyrifos effluent concentration in µg/L.

5 Average Weekly Effluent Limitation

$$S_{AWEL} = \frac{C_{D\ W-AVG}}{0.14} + \frac{C_{C\ W-AVG}}{0.021} \leq 1.0$$

$C_{D\ W\text{-}AVG}$ = average weekly diazinon effluent concentration in µg/L.
$C_{C\ W\text{-}AVG}$ = average weekly chlorpyrifos effluent concentration in µg/L.

6 The final effluent limitations for electrical conductivity are not in effect until the final compliance dates specified in the electrical conductivity compliance schedule (see Section VI.C.7.a).

7 Applied as a 7-day median effluent limitation.

8 Not to be exceeded more than once in any 30-day period.

5. Whole Effluent Toxicity (WET)

For compliance with the Basin Plan's narrative toxicity objective, this Order requires the Discharger to conduct WET testing for acute and chronic toxicity, as specified in the Monitoring and Reporting Program (Attachment E, section V). This Order also contains effluent limitations for acute toxicity and requires the Discharger to implement best management practices to investigate the causes of, and identify corrective actions to reduce or eliminate effluent toxicity.

a. **Acute Aquatic Toxicity.** The Basin Plan contains a narrative toxicity objective that states, "*All waters shall be maintained free of toxic substances in concentrations that produce detrimental physiological responses in human, plant, animal, or aquatic life.*" (Basin Plan at page III-8.00) The Basin Plan also states that, *"…effluent limits based upon acute biotoxicity tests of effluents will be prescribed where appropriate…*"

For priority pollutants, the SIP dictates the procedures for conducting the RPA. Acute toxicity is not a priority pollutant. Therefore, the Central Valley Water Board is not restricted to one particular RPA method. Therefore, due to the site-specific conditions of the discharge, the Central Valley Water Board has used professional judgment in determining the appropriate method for conducting the RPA. U.S. EPA's September 2010 NPDES Permit Writer's Manual, page 6-30, states,

"*State implementation procedures might allow, or even require, a permit writer to determine reasonable potential through a qualitative assessment process without using available facility-specific effluent monitoring data or when such data are not available…A permitting authority might also determine that WQBEL's are required for specific pollutants for all facilities that exhibit certain operational or discharge characteristics (e.g., WQBEL's for pathogens in all permits for POTW's discharging to contact recreational waters).*" Although the discharge has been consistently in compliance with the acute effluent limitations, the Facility is a POTW that treats domestic wastewater containing ammonia and other acutely toxic pollutants. Acute toxicity effluent limits are required to ensure compliance with the Basin Plan's narrative toxicity objective.

U.S. EPA Region 9 provided guidance for the development of acute toxicity effluent limitations in the absence of numeric water quality objectives for toxicity in its document titled "Guidance for NPDES Permit Issuance", dated February 1994. In section B.2. "Toxicity Requirements" (pgs. 14-15) it states that, "*In the absence of specific numeric water quality objectives for acute and chronic toxicity, the narrative criterion 'no toxics in toxic amounts' applies. Achievement of the narrative criterion, as applied herein, means that ambient waters shall not demonstrate for acute toxicity: 1) less than 90% survival, 50% of the time, based on the monthly median, or 2) less than 70% survival, 10% of the time, based on any monthly median. For chronic toxicity, ambient waters shall not demonstrate a test result of greater than 1 TUc.*" Consistent with Order R5-2012-0031, effluent limitations for acute toxicity have been included in this Order as follows:

Acute Toxicity. Survival of aquatic organisms in 96-hour bioassays of undiluted waste shall be no less than:

Minimum for any one bioassay ---------- 70%
Median for any three consecutive bioassays ---------- 90%

b. **Chronic Aquatic Toxicity.** The Basin Plan contains a narrative toxicity objective that states, "*All waters shall be maintained free of toxic substances in concentrations that produce detrimental physiological responses in human, plant, animal, or aquatic life*." (Basin Plan at page III-8.00) Order R5-2012-0031 included an effluent limitation for chronic toxicity. No dilution has been granted for chronic toxicity. Therefore, chronic toxicity testing results exceeding 1 TUc demonstrates the discharge has a reasonable potential to cause or contribute to an exceedance of the Basin Plan's narrative toxicity objective. As shown in Table F-13 below, based on chronic whole effluent toxicity testing performed by the Discharger from February 2015 through September 2015, there was one exceedance of the chronic toxicity numeric trigger for *C. dubia* reproduction in August 2015. However, the Discharger noted that during the month of August 2015, the start-up process for the newly constructed Phase 2 Facility was occurring and the Discharger was feeding activated sludge from the Phase 1A Facility. In addition, the maintenance cleanings of the UV sampling lines and bulbs took place in August 2015. Therefore, the Central Valley Water Board has determined that the toxicity testing conducted in August 2015 is not representative of typical effluent quality due to the start-up of the Phase 2 Facility that was occurring at the time of the sampling. Based on the remaining chronic whole effluent toxicity testing results, the discharge does not have reasonable potential to cause or contribute to an in-stream excursion above the Basin Plan's narrative toxicity objective. Therefore, the effluent limitation for chronic

toxicity has not been retained in this Order. Removal of the effluent limitation is in accordance with federal antibacksliding regulations (see section IV.D.3 of this Fact Sheet).

Table F-13. Whole Effluent Chronic Toxicity Testing Results

Date	Fathead Minnow *Pimephales promelas*		Water Flea *Ceriodaphnia dubia*		Green Algae *Selenastrum capricornutum*
	Survival (TUc)	Growth (TUc)	Survival (TUc)	Reproduction (TUc)	Growth (TUc)
February 2015	1	1	1	1	1
March 2015	1	1	1	1	1
April 2015	1	1	1	1	1
May 2015	1	1	1	1	1
June 2015	1	1	1	1	1
July 2015[1]	1	1	1	1	1
August 2015	1	1	1	>1	1
September 2015	1	1	1	1	1

[1] Start-up of Phase 2 of tertiary upgrade project.

The Monitoring and Reporting Program of this Order requires monthly chronic WET monitoring for demonstration of compliance with the narrative toxicity objective. In addition to WET monitoring, the Special Provision in section VI.C.2.a.ii of the Order includes a numeric toxicity monitoring trigger, requirements for accelerated monitoring, and requirements for Toxicity Reduction Evaluation (TRE) initiation if toxicity is demonstrated.

To ensure compliance with the Basin Plan's narrative toxicity objective, the Discharger is required to conduct chronic WET testing, as specified in the Monitoring and Reporting Program (Attachment E, section V). Furthermore, the Special Provision contained at VI.C.2.a of this Order requires the Discharger to investigate the causes of, and identify and implement corrective actions to reduce or eliminate effluent toxicity. If the discharge demonstrates toxicity exceeding the numeric toxicity monitoring trigger, the Discharger is required to initiate a TRE in accordance with an approved TRE Work Plan. The numeric toxicity monitoring trigger is not an effluent limitation; it is the toxicity threshold at which the Discharger is required to perform accelerated chronic toxicity monitoring, as well as, the threshold to initiate a TRE if effluent toxicity has been demonstrated.

D. Final Effluent Limitation Considerations

1. Mass-based Effluent Limitations

40 C.F.R section 122.45(f)(1) requires effluent limitations be expressed in terms of mass, with some exceptions, and 40 C.F.R. section 122.45(f)(2) allows pollutants that are limited in terms of mass to additionally be limited in terms of other units of measurement. This Order includes effluent limitations expressed in terms of mass and concentration. In addition, pursuant to the exceptions to mass limitations provided in 40 CF.R. section 122.45(f)(1), some effluent limitations are not expressed in terms of mass, such as pH and temperature, and when the applicable standards are expressed in terms of concentration (e.g., CTR criteria and MCL's) and mass limitations are not necessary to protect the beneficial uses of the receiving water.

Mass-based effluent limitations have been established in this Order for ammonia, BOD_5, and TSS because they are oxygen demanding substances. Except for the pollutants

listed above, mass-based effluent limitations are not included in this Order for pollutant parameters for which effluent limitations are based on water quality objectives and criteria that are concentration-based.

Mass-based effluent limitations were calculated based upon the design flow (average daily discharge flow) permitted in section IV.A.1.e of this Order.

2. Averaging Periods for Effluent Limitations

40 C.F.R. section 122.45 (d) requires AMEL's and AWEL's for POTW's unless impracticable. For BOD_5, pH, total coliform organisms, and TSS, AWEL's have been replaced or supplemented with effluent limitations utilizing shorter averaging periods. The rationale for using shorter averaging periods for these constituents is discussed in section IV.C.3 of this Fact Sheet.

3. Satisfaction of Anti-Backsliding Requirements

The effluent limitations in this Order are at least as stringent as the effluent limitations in the previous Order, with the exception of effluent limitations for aluminum, chronic toxicity, copper, iron, manganese, and molybdenum. The effluent limitations for these pollutants are less stringent than those in Order R5-2012-0031. This relaxation of effluent limitations is consistent with the anti-backsliding requirements of the CWA and federal regulations.

a. **CWA section 402(o)(1) and 303(d)(4).** CWA section 402(o)(1) prohibits the establishment of less stringent WQBEL's "*except in compliance with section 303(d)(4).*" CWA section 303(d)(4) has two parts: paragraph (A) which applies to nonattainment waters and paragraph (B) which applies to attainment waters.

   i. For waters where standards are not attained, CWA section 304(d)(4)(A) specifies that any effluent limit based on a TMDL or other WLA may be revised only if the cumulative effect of all such revised effluent limits based on such TMDL's or WLA's will assure the attainment of such water quality standards.

   ii. For attainment waters, CWA section 303(d)(4)(B) specifies that a limitation based on a water quality standard may be relaxed where the action is consistent with the antidegradation policy.

   The San Joaquin River is considered an attainment water for aluminum, copper, iron, manganese, and molybdenum because the receiving water is not listed as impaired on the 303(d) list for these constituents.[1] As discussed in section IV.D.4, below, removal of the effluent limits complies with federal and state antidegradation requirements. Thus, removal of the effluent limitations for aluminum, copper, iron, manganese, and molybdenum for the year-round tertiary discharge from Order R5-2012-0031 meets the exception in CWA section 303(d)(4)(B).

b. **CWA section 402(o)(2).** CWA section 402(o)(2) provides several exceptions to the anti-backsliding regulations. CWA 402(o)(2)(B)(i) allows a renewed, reissued, or modified permit to contain a less-stringent effluent limitation for a pollutant if information is available which was not available at the time of permit issuance (other

[1] "*The exceptions in Section 303(d)(4) address both waters in attainment with water quality standards and those not in attainment, i.e. waters on the section 303(d) impaired waters list*." State Water Board Order WQ 2008-0006, Berry Petroleum Company, Poso Creek/McVan Facility.

than revised regulations, guidance, or test methods) and which would have justified the application of a less stringent effluent limitation at the time of permit issuance.

As described further in section IV.C.3.a of this Fact Sheet, updated information that was not available at the time Order R5-2012-0031 was issued indicates that aluminum, chronic toxicity, copper, iron, manganese, and molybdenum in the effluent do not exhibit reasonable potential to cause or contribute to an exceedance of water quality objectives in the receiving water. The updated information that supports the relaxation of effluent limitations includes the following:

i. **Aluminum.** Effluent monitoring data collected between August 2014 and September 2015 indicates that aluminum in the discharge does not exhibit reasonable potential to cause or contribute to an exceedance of the Secondary MCL or NAWQC acute criterion.

ii. **Copper.** Effluent and receiving water monitoring data collected between August 2014 and September 2015 indicates that copper in the discharge does not exhibit reasonable potential to cause or contribute to an exceedance of the CTR criteria for the protection of freshwater aquatic life.

iii. **Chronic Toxicity.** Effluent chronic toxicity testing performed between February 2015 and September 2015 indicates that the discharge does not exhibit reasonable potential to cause or contribute to an in-stream excursion above the Basin Plan's narrative toxicity objective.

iv. **Iron.** Effluent monitoring data collected between August 2014 and September 2015 indicates that iron in the discharge does not exhibit reasonable potential to cause or contribute to an exceedance of the Secondary MCL.

v. **Manganese.** Effluent monitoring data collected between August 2014 and September 2015 indicates that manganese in the discharge does not exhibit reasonable potential to cause or contribute to an exceedance of the Secondary MCL.

vi. **Molybdenum.** Effluent monitoring data collected between August 2014 and September 2015 indicates that molybdenum in the discharge does not exhibit reasonable potential to cause or contribute to an exceedance of the Basin Plan objective.

4. Antidegradation Policies

a. **Surface Water.** As discussed in section II.E of this Fact Sheet, the Discharger is in the process of completing a phased upgrade project that would increase the design capacity of the Facility to 19.1 MGD. Order R5-2012-0031 provided antidgradation findings and authorized an increase in the daily average discharge flow to 19.1 MGD. This Order does not provide for an increase in flow or mass of pollutants to the receiving water beyond the levels authorized in Order R5-2012-0031. Therefore, a complete antidegradation analysis is not necessary. A summary of the complete antidegradation analysis approved by the Central Valley Water Board in 2012 and updated information since adoption of Order R5-2012-0031 is included below.

The Discharger requested in their September 2010 ROWD authorization to discharge up to a daily average flow of 19.1 MGD as part of a phased upgrade

project. Larry Walker & Associates prepared a report titled *City of Modesto Antidegradation Analysis for Proposed Wastewater Quality Control Facility Discharge Modification*, August 2010 (Antidegradation Report) that provides a complete antidegradation analysis, following the guidance provided by State Water Board Administrative Procedures Update (APU) 90-004, for the proposed tertiary discharge flow of 19.1 MGD. Pursuant to the guidelines, the Antidegradation Report evaluated whether changes in water quality resulting from the proposed capacity increase are consistent with the maximum benefit to the people of the state, will not unreasonably affect beneficial uses, will not cause water quality to be less than water quality objectives, and that the discharge provides protection for existing in-stream uses and water quality necessary to protect those uses.

Based on the Antidegradation Report, the Central Valley Water Board determined the permitted surface water discharge to be consistent with the antidegradation provisions of 40 C.F.R. part 131.12 and the State Antidegradation Policy. Order R5-2012-0031 allowed for an increase in the volume and mass of pollutants discharged to the San Joaquin River by allowing an increase in the year-round discharge flow to 19.1 MGD. The increase in the discharge allows wastewater utility service necessary to accommodate housing and economic expansion in the area, and is considered to be a benefit to the people of the State. The discharge is a Title 22, or equivalent, tertiary-level treated wastewater, which is a high level of treatment of sewage waste that is considered BPTC for most constituents in the wastewater and will result in attaining water quality standards applicable to the discharge. A detailed discussion of the Central Valley Water Board's antidegradation analysis is provided below.

i. **Water quality parameters and beneficial uses which will be affected by the proposed expansion and the extent of the impact.** Compliance with this Order will not adversely impact beneficial uses of the receiving water or downstream receiving waters. All beneficial uses will be maintained and protected. 40 C.F.R. section 131.12 defines the following tier designations to describe water quality in the receiving water body.

Tier 1 Designation: *Existing in-stream water uses and the level of water quality necessary to protect the existing uses shall be maintained and protected.* (40 C.F.R. § 131.12)

Tier 2 Designation: *Where the quality of waters exceed levels necessary to support propagation of fish, shellfish, and wildlife and recreation in and on the water, that quality shall be maintained and protected unless the State finds, after full satisfaction of the intergovernmental coordination and public participation provisions of the State's continuing planning process, that allowing lower water quality is necessary to accommodate important economic or social development in the area in which the waters are located. In allowing such degradation or lower water quality, the State shall assure water quality adequate to protect existing uses fully. Further, the State shall assure that there shall be achieved the highest statutory and regulatory requirements for all new and existing point sources and all cost-effective and reasonable best management practices for nonpoint source control.* (40 C.F.R. § 131.12)

The tier designation is assigned on a pollutant-by-pollutant basis. The following is the potential effect on water quality parameters regulated in this Order, and was assessed in the Antidegradation Report.

Based on the findings of the Antidegradation Report, considering the elimination of the seasonal secondary discharge, the increase in year-round tertiary discharge will have minimal impact on the near-field and far-field water quality of the San Joaquin River with respect to chemical constituents and dissolved oxygen. The analysis demonstrates the proposed project will have an overall favorable impact on water quality in the receiving waters downstream of the Facility, and that the water quality necessary to protect beneficial uses will be maintained. Some constituents in the receiving water exceed water quality objectives, but it is not caused by the discharge. "*The near-field water quality impact assessment also shows exceedance of the aluminum, iron, manganese, and electrical conductivity water quality objectives in the receiving water. However, these exceedances are the result of the ambient levels of these four parameters already exceeding water quality standards upstream of the WQCF discharge. The WQCF discharge acts to slightly decrease downstream concentrations of these four parameters compared to their upstream concentrations. All other near- and far-field constituents considered in this report are expected to exhibit, at worst, only very minor increases in concentration in the receiving water at well-mixed conditions downstream of the discharge. They are not projected to exceed relevant water quality objectives, and on average are estimated to be present at concentrations well below objectives*." (pg. ES-2, Antidegradation Report)

The increased discharge will negligibly increase loading of bio-accumulative constituents. No beneficial uses of the San Joaquin River are anticipated to be adversely affected by the planned action.

ii. **Scientific Rationale for Determining Potential Lowering of Water Quality.** The rationale used in the antidegradation analysis is based on 40 C.F.R section 131.12, the State Antidegradation Policy, State Water Board APU 90-004, the Basin Plan, the CTR, and the 303(d) listings.

The scientific rationale used in the Antidegradation Report evaluated the near-field and far-field water quality impacts of increasing the discharge. The near-field effects on San Joaquin River water quality of the current permitted Facility design capacity and the proposed Facility design capacity were compared using a mass balance equation for each discharge season, winter and summer (i.e., 1 October to 31 May and 1 June to 30 September, respectively). The discharge is expected to be substantially mixed with the receiving water at a point approximately 1-mile downstream of the discharge, which represents the near-field domain for water quality modeling. Near-field water quality impacts are estimated considering the increase in tertiary discharge, the elimination of the seasonal secondary discharge during the winter season and the increase in tertiary discharge during the summer season. Changes in water quality were evaluated using 1) projected median tertiary and secondary effluent concentrations, and 2) median ambient river concentrations calculated from critical, dry, and below normal water years.

The far-field effects on the San Joaquin River were assessed using a mass balance model in conjunction with a hydrologic model of water movement through the Sacramento-San Joaquin Delta. Six locations within the Delta and one location at the boundary (i.e., San Joaquin River at Vernalis) were used as far-field locations for the evaluation.

The Antidegradation Report analyzed pollutants that were based on one or more of the following conditions: 1) the Facility received an effluent limitation for a particular constituent, 2) the constituent was identified as a pollutant/stressor on the 303(d) list for selected Delta waterways, or 3) an adopted TMDL exists downstream of the discharge. The Antidegradation Report evaluated each selected pollutant detected in the effluent and receiving water to determine if the proposed tertiary discharge increase to 19.1 MGD (and removal of seasonal secondary discharge) potentially allows significant increase of the amount of pollutants present in the downstream receiving water influenced by the proposed discharge. Pollutants that significantly increased concentration or mass downstream would have required an alternatives analysis to determine whether implementation of alternatives to the proposed action would be in the best socioeconomic interest of the people of the region, and be to the maximum benefit of the people of the State. Details on the scientific rationale are discussed in detail in the Antidegradation Report.

The Central Valley Water Board concurs with this scientific approach.

iii. **Alternative Control Measures.** APU 90-004 requires the consideration of “feasible alternative control measures” as part of the procedures for a complete antidegradation analysis. The Discharger considered several alternatives that would reduce or eliminate the lowering of water quality resulting from the proposed increase in tertiary treated discharge to 19.1 MGD. The Antidegradation Report assessed maintaining existing water quality in the San Joaquin River with an increase in discharge through evaluating 1) additional wastewater treatment by microfiltration and reverse osmosis (MF/RO), or 2) no increase in discharge capacity. These plant expansion alternatives are summarized below:

(a) The implementation of MF/RO would offset estimated reductions in San Joaquin River water quality; however, the monthly residential user rates would increase. The economic impacts model also estimates job losses due to this project, and the Antidegradation Report presents issues regarding the brine and crystallized residuals disposal.

(b) No Project Alternative, which is not to increase the discharge capacity.

The project alternatives evaluated would not substantially reduce or eliminate significant water quality impacts of the proposed action because the proposed action would not significantly degrade water quality. The MF/RO alternative may result in water quality effects elsewhere or cause other environmental impacts that are worse than those identified for the proposed action.

iv. **Socioeconomic Evaluation.** The objective of the socioeconomic analysis was to determine if the lowering of San Joaquin River water quality is in the maximum benefit of the people of the state. The socioeconomic evaluation within the Antidegradation Report provides an in-depth analysis of: 1) cost and

benefits, 2) socio-economic impacts of alternatives for maintaining existing water quality, and 3) balance of environmental benefits and socio-economic considerations. The Antidegradation Report also provided results from modeling of the economic impacts on the community.

Given the current infrastructure, future development in the City of Modesto and surrounding communities would rely on the Discharger and its Facility for wastewater collection, treatment, and recycled water services. The plant expansion to 19.1 MGD and increase in surface water discharge would accommodate planned and approved growth. Should the incremental changes in San Joaquin River water quality characterized herein be disallowed, such action would: 1) force future developments in the Discharger's service area to find alternative methods for disposing of wastewater; 2) require adding reverse-osmosis treatment processes to a significant portion of flow, and possibly other plant upgrades, to eliminate the small water quality changes; or 3) prohibit planned and approved development within and adjacent to the Discharger's service area. On balance, allowing the minor degradation of water quality is in the best interest of the people of the area and the state, compared to these other options; and is necessary to accommodate important economic or social development in the area.

v. **Justification for Allowing Degradation.** The antidegradation analysis provided the following rationale to justify the proposed increase in discharge to the receiving water.

(a) The increase in permitted discharge capacity is necessary to accommodate important economic and social development in the City of Modesto and surrounding communities, and is consistent with the Discharger's General Plan. Failure to approve the increase, or alternatively requiring the Discharger to implement control measures that would maintain existing water quality and mass emissions in the San Joaquin River, would have significant adverse economic and social impacts on the City of Modesto and surrounding communities and their citizens and businesses.

(b) The Facility will discharge Title 22 tertiary treated effluent with nitrification/denitrification that will result in minimal water quality degradation, and meet or exceed the highest statutory and regulatory requirements which meets or exceeds BPTC.

(c) The Order is fully protective of the beneficial uses of the San Joaquin River. The anticipated water quality changes in the San Joaquin River will not reduce or impair its designated beneficial uses and is consistent with State and federal antidegradation policies.

(d) The increased discharge, while causing slight increases in downstream water quality concentrations for some constituents, will produce slight decreases in downstream concentrations for others,

(e) The benefits of maintaining existing water quality and mass emissions for the constituents analyzed are not commensurate with the costs of additional treatment. Therefore, no feasible alternatives currently exist to reduce the impacts, and

(f) The Discharger has fully satisfied the requirements of the intergovernmental coordination and public participation provisions of the State's continuing planning process concurrent with the public participation period of this Order.

This Order removes effluent limitations for aluminum, copper, iron, manganese, and molybdenum based on updated monitoring data demonstrating that the effluent does not cause or contribute to an exceedance of the applicable water quality criteria or objectives in the receiving water. The removal of WQBEL's for these parameters will not result in an increase in pollutant concentration or loading, a decrease in the level of treatment or control, or a reduction of water quality. Therefore, the Central Valley Water Board finds that the removal of the effluent limitations does not result in an increase in pollutants or any additional degradation of the receiving water. Thus, the removal and relaxation of effluent limitations is consistent with the antidegradation provisions of 40 C.F.R. section 131.12 and the State Antidegradation Policy.

5. Stringency of Requirements for Individual Pollutants

This Order contains both technology-based effluent limitations and WQBEL's for individual pollutants. The technology-based effluent limitations consist of restrictions on flow, BOD_5, TSS, and pH. Restrictions on these constituents are discussed in section IV.B.2 of the Fact Sheet. This Order's technology-based pollutant restrictions implement the minimum, applicable federal technology-based requirements. For BOD_5, TSS, and pH, both technology-based effluent limitations and WQBEL's are applicable. The more stringent of these effluent limitations are implemented by this Order. These limitations are not more stringent than required by the CWA.

WQBEL's have been derived to implement water quality objectives that protect beneficial uses. Both the beneficial uses and the water quality objectives have been approved pursuant to federal law and are the applicable federal water quality standards. To the extent that toxic pollutant WQBEL's were derived from the CTR, the CTR is the applicable standard pursuant to 40 C.F.R. section 131.38. The procedures for calculating the individual water quality-based effluent limitations for priority pollutants are based on the CTR implemented by the SIP, which was approved by U.S. EPA on 18 May 2000. All beneficial uses and water quality objectives contained in the Basin Plan were approved under state law and submitted to and approved by U.S. EPA prior to 30 May 2000. Any water quality objectives and beneficial uses submitted to U.S. EPA prior to 30 May 2000, but not approved by U.S. EPA before that date, are nonetheless "*applicable water quality standards for purposes of the CWA*" pursuant to 40 C.F.R. section 131.21(c)(1). Collectively, this Order's restrictions on individual pollutants are no more stringent than required to implement the requirements of the CWA.

Summary of Final Effluent Limitations
Discharge Point 001

Table F-14. Summary of Final Effluent Limitations

Parameter	Units	Effluent Limitations					Basis[1]
		Average Monthly	Average Weekly	Maximum Daily	Instantaneous Minimum	Instantaneous Maximum	
Flow	MGD	--	--	14.9[2]	--	--	DC
	MGD	--	--	19.1[3]			
Conventional Pollutants							
Biochemical Oxygen Demand (5-day @ 20°C)	mg/L	10	15	20	--	--	TTC
	lbs/day[4]	1,200	1,900	2,500	--	--	
	lbs/day[5]	1,600	2,400	3,200			
	% Removal	85	--	--	--	--	CFR
pH	standard units	--	--	--	6.5	8.5	BP
Total Suspended Solids	mg/L	10	15	20	--	--	TTC
	lbs/day[4]	1,200	1,900	2,500	--	--	
	lbs/day[5]	1,600	2,400	3,200			
	% Removal	85	--	--	--	--	CFR
Priority Pollutants							
Mercury, Total Recoverable	lbs/year	1.16[6]	--	--	--	--	PB
Non-Conventional Pollutants							
Ammonia Nitrogen, Total (as N)	mg/L	0.80	1.7	--	--	--	NAWQC
	lbs/day[4]	99	210	--	--	--	
	lbs/day[5]	130	270				
Chlorpyrifos	µg/L	[7]	[8]	--	--	--	TMDL
Diazinon	µg/L	[7]	[8]	--	--	--	TMDL
Electrical Conductivity @ 25°C	µmhos/cm	700[9]	--	--	--	--	TMDL
Electrical Conductivity @ 25°C (1 October – 31 March)	µmhos/cm	1,000[9]	--	--	--	--	TMDL
Nitrate Plus Nitrite (as N)	mg/L	10	19	--	--	--	MCL
Total Coliform Organisms	MPN/100 mL	--	2.2[10]	23[11]	--	240	Title 22
Acute Toxicity	% survival	--	--	70[12]/90[13]	--	--	BP

Parameter	Units	Effluent Limitations					Basis[1]
		Average Monthly	Average Weekly	Maximum Daily	Instantaneous Minimum	Instantaneous Maximum	

[1] DC – Based on the design capacity of the Facility.
TTC – Based on tertiary treatment capability. These effluent limitations reflect the capability of a properly operated tertiary treatment plant.
CFR – Based on secondary treatment standards contained in 40 C.F.R part 133.
BP – Based on water quality objectives contained in the Basin Plan.
PB – Based on Facility performance.
NAWQC – Based on U.S. EPA's National Ambient Water Quality Criteria for the protection of freshwater aquatic life.
TMDL – Based on the applicable TMDL.
MCL – Based on the Primary Maximum Contaminant Level.
Title 22 – Based on CA Division of Drinking Water Reclamation Criteria, CCR, Division 4, Chapter 3 (Title 22).

[2] Effective until the Discharger demonstrates compliance with Special Provision VI.C.6.b of this Order, the average daily discharge flow shall not exceed 14.9 MGD.

[3] Effective upon compliance with Special Provision VI.C.6.b of this Order, the average daily discharge flow shall not exceed 19.1 MGD.

[4] Based on an average daily discharge flow of 14.9 MGD. Effective immediately and until Executive Offer's written approval of flow increase (Special Provision VI.C.6.b).

[5] Based on an average daily discharge flow of 19.1 MGD. Effective upon Executive Offer's written approval of flow increase (Special Provision VI.C.6.b).

[6] The total calendar year annual mass discharge of total recoverable mercury shall not exceed 1.16 lbs.

[7] Average Monthly Effluent Limitation

$$S_{\mathrm{AMEL}} = \frac{C_{D\ M-AVG}}{0.079} + \frac{C_{C\ M-AVG}}{0.012} \leq 1.0$$

$C_{D\ M\text{-}AVG}$ = average monthly diazinon effluent concentration in µg/L.
$C_{C\ M\text{-}AVG}$ = average monthly chlorpyrifos effluent concentration in µg/L.

[8] Average Weekly Effluent Limitation

$$S_{\mathrm{AWEL}} = \frac{C_{D\ W-AVG}}{0.14} + \frac{C_{C\ W-AVG}}{0.021} \leq 1.0$$

$C_{D\ W\text{-}AVG}$ = average weekly diazinon effluent concentration in µg/L.
$C_{C\ W\text{-}AVG}$ = average weekly chlorpyrifos effluent concentration in µg/L.

[9] The final effluent limitations for electrical conductivity are not in effect until the final compliance dates specified in the electrical conductivity compliance schedule (see Section VI.C.7.a.).

[10] Applied as a 7-day median effluent limitation.

[11] Not to be exceeded more than once in any 30-day period.

[12] 70% minimum for any one bioassay.

[13] 90% median for any three consecutive bioassays.

E. Interim Effluent Limitations – Not Applicable

F. Land Discharge Specifications – Not Applicable

Land discharge specifications for the Facility are included in WDR Order 99-112.

G. Recycling Specifications – Not Applicable

Recycling specifications for the Facility are included in WDR Order 99-112.

V. RATIONALE FOR RECEIVING WATER LIMITATIONS

A. Surface Water

1. CWA section 303(a-c), requires states to adopt water quality standards, including criteria where they are necessary to protect beneficial uses. The Central Valley Water Board adopted water quality criteria as water quality objectives in the Basin Plan. The Basin

Plan states that "[t]*he numerical and narrative water quality objectives define the least stringent standards that the Regional Water Board will apply to regional waters in order to protect the beneficial uses.*" The Basin Plan includes numeric and narrative water quality objectives for various beneficial uses and water bodies. This Order contains receiving surface water limitations based on the Basin Plan numerical and narrative water quality objectives for bacteria, biostimulatory substances, color, chemical constituents, dissolved oxygen, floating material, oil and grease, pH, pesticides, radioactivity, suspended sediment, settleable substances, suspended material, tastes and odors, temperature, toxicity, and turbidity.

B. Groundwater – Not Applicable

VI. RATIONALE FOR PROVISIONS

A. Standard Provisions

Standard Provisions, which apply to all NPDES permits in accordance with 40 C.F.R. section 122.41, and additional conditions applicable to specified categories of permits in accordance with 40 C.F.R. section 122.42, are provided in Attachment D. The Discharger must comply with all Standard Provisions and with those additional conditions that are applicable under section 122.42.

Sections 122.41(a)(1) and (b) through (n) of 40 C.F.R. establish conditions that apply to all state-issued NPDES permits. These conditions must be incorporated into the permits either expressly or by reference. If incorporated by reference, a specific citation to the regulations must be included in the Order. Section 123.25(a)(12) of 40 C.F.R. allows the state to omit or modify conditions to impose more stringent requirements. In accordance with 40 C.F.R. section 123.25, this Order omits federal conditions that address enforcement authority specified in 40 C.F.R. sections 122.41(j)(5) and (k)(2) because the enforcement authority under the Water Code is more stringent. In lieu of these conditions, this Order incorporates by reference Water Code section 13387(e).

B. Special Provisions

1. Reopener Provisions

a. **Mercury.** This provision allows the Central Valley Water Board to reopen this Order in the event mercury is found to be causing toxicity based on acute or chronic toxicity test results, or if a TMDL program is adopted. In addition, this Order may be reopened if the Central Valley Water Board determines that a mercury offset program is feasible for dischargers subject to NPDES permits.

b. **Whole Effluent Toxicity.** This Order requires the Discharger to investigate the causes of, and identify corrective actions to reduce or eliminate effluent toxicity through a TRE. This Order may be reopened to include a numeric chronic toxicity limitation, a new acute toxicity limitation, and/or a limitation for a specific toxicant identified in the TRE. Additionally, if a numeric chronic toxicity water quality objective is adopted by the State Water Board, this Order may be reopened to include a numeric chronic toxicity limitation based on that objective.

c. **Water Effects Ratio (WER) and Metal Translators.** A default WER of 1.0 has been used in this Order for calculating criteria for applicable inorganic constituents. In addition, default dissolved-to-total metal translators have been used to convert water quality objectives from dissolved to total recoverable. If the Discharger performs studies to determine site-specific WER's and/or site-specific dissolved-to-

total metal translators, this Order may be reopened to modify the effluent limitations for the applicable inorganic constituents.

d. **Ultraviolet Light (UV) Disinfection Operating Specifications.** UV system operating specifications are required to ensure that the UV system is operated to achieve the required pathogen removal. UV disinfection system specifications and monitoring and reporting requirements are required to ensure that adequate UV dosage is applied to the wastewater to inactivate pathogens (e.g., viruses) in the wastewater. UV dosage is dependent on several factors such as UV transmittance, UV power setting, wastewater turbidity, and wastewater flow through the UV disinfection system. The UV specifications in this Order are based on the National Water Research Institute (NWRI) and American Water Works Association Research Foundation (AWWRF) titled, "Ultraviolet Disinfection Guidelines for Drinking Water and Water Reuse." (NWRI guidelines). If the Discharger conducts a site-specific UV engineering study that identifies site-specific UV operating specifications that will achieve the virus inactivation required by Title 22 for disinfected tertiary recycled water, this Order may be reopened to modify the UV specifications, in accordance with Reopener Provision VI.C.1.f.

e. **Basin Plan Amendment – Salinity Objectives for the Lower San Joaquin River.** The Central Valley Water Board completed a TMDL for salt and boron in the Lower San Joaquin River and amended the Basin Plan. In accordance with the TMDL, a Basin Plan Amendment was adopted by the Central Valley Water Board on X June 2017 that established salinity water quality objectives for the Lower San Joaquin River from Merced River to Vernalis. Furthermore, the Basin Plan Amendment modified the Salt and Boron TMDL to clarify that NPDES point source dischargers could participate in the real-time salinity management program in lieu of complying with the wasteload allocations. Therefore, this Order may be reopened to modify salinity requirements, as appropriate, in accordance with the Basin Plan Amendment after approval by the State Water Board, USEPA, and the Office of Administrative Law. If approval of the Lower San Joaquin Basin Plan Amendment is delayed past 2022, the interim effluent limitation may be reevaluated to consider longer term performance data or consideration of other new information.

2. Special Studies and Additional Monitoring Requirements

a. **Chronic Whole Effluent Toxicity Requirements.** The Basin Plan contains a narrative toxicity objective that states, "*All waters shall be maintained free of toxic substances in concentrations that produce detrimental physiological responses in human, plant, animal, or aquatic life.*" (Basin Plan at page III-8.00) Based on whole effluent chronic toxicity testing performed by the Discharger from February 2015 through September 2015, the discharge does not have reasonable potential to cause or contribute to an in-stream excursion above the Basin Plan's narrative toxicity objective.

The Monitoring and Reporting Program of this Order requires chronic WET monitoring for demonstration of compliance with the narrative toxicity objective. In addition to WET monitoring, this provision requires the Discharger to develop a TRE Work Plan in accordance with U.S. EPA guidance. The provision also includes a numeric toxicity monitoring trigger, requirements for accelerated monitoring, and requirements for TRE initiation if toxicity is demonstrated.

Monitoring Trigger. A numeric toxicity monitoring trigger of >1 TUc (where TUc = 100/NOEC) is applied in the provision because this Order does not allow any dilution for the chronic condition. Therefore, a TRE is triggered when the effluent exhibits toxicity at 100% effluent.

Accelerated Monitoring. The provision requires accelerated WET testing when a regular WET test result exceeds the monitoring trigger. The purpose of accelerated monitoring is to determine, in an expedient manner, whether there is toxicity before requiring the implementation of a TRE. Due to possible seasonality of the toxicity, the accelerated monitoring should be performed in a timely manner, preferably taking no more than 2 to 3 months to complete.

The provision requires accelerated monitoring consisting of four chronic toxicity tests in a 6-week period (i.e., one test every 2 weeks) using the species that exhibited toxicity. Guidance regarding accelerated monitoring and TRE initiation is provided in the TSD. The TSD at page 118 states, "*EPA recommends if toxicity is repeatedly or periodically present at levels above effluent limits more than 20 percent of the time, a TRE should be required.*" Therefore, four accelerated monitoring tests are required in this provision. If no toxicity is demonstrated in the four accelerated tests, then it demonstrates that toxicity is not present at levels above the monitoring trigger more than 20 percent of the time (only 1 of 5 tests are toxic, including the initial test). However, notwithstanding the accelerated monitoring results, if there is adequate evidence of effluent toxicity (i.e., toxicity present exceeding the monitoring trigger more than 20 percent of the time), the Executive Officer may require that the Discharger initiate a TRE.

See the WET Accelerated Monitoring Flow Chart (Figure F-2), below, for further clarification of the accelerated monitoring requirements and for the decision points for determining the need for TRE initiation.

TRE Guidance. The Discharger is required to prepare a TRE Work Plan in accordance with U.S. EPA guidance. Numerous guidance documents are available, as identified below:

i. *Toxicity Reduction Evaluation Guidance for Municipal Wastewater Treatment Plants*, EPA/833-B-99/002, August 1999.

ii. *Generalized Methodology for Conducting Industrial Toxicity Reduction Evaluations (TREs)*, EPA/600/2-88/070, April 1989.

iii. *Methods for Aquatic Toxicity Identification Evaluations: Phase I Toxicity Characterization Procedures, Second Edition*, EPA 600/6-91/003, February 1991.

iv. *Toxicity Identification Evaluation: Characterization of Chronically Toxic Effluents, Phase I*, EPA/600/6-91/005F, May 1992.

v. *Methods for Aquatic Toxicity Identification Evaluations: Phase II Toxicity Identification Procedures for Samples Exhibiting Acute and Chronic Toxicity, Second Edition*, EPA/600/R-92/080, September 1993.

vi. *Methods for Aquatic Toxicity Identification Evaluations: Phase III Toxicity Confirmation Procedures for Samples Exhibiting Acute and Chronic Toxicity, Second Edition*, EPA 600/R-92/081, September 1993.

vii. *Methods for Measuring the Acute Toxicity of Effluents and Receiving Waters to Freshwater and Marine Organisms, Fifth Edition*, EPA-821-R-02-012, October 2002.

viii. *Short-term Methods for Estimating the Chronic Toxicity of Effluents and Receiving Waters to Freshwater Organisms, Fourth Edition*, EPA-821-R-02-013, October 2002.

ix. *Technical Support Document for Water Quality-based Toxics Control*, EPA/505/2-90-001, March 1991.

Figure F-2
WET Accelerated Monitoring Flow Chart

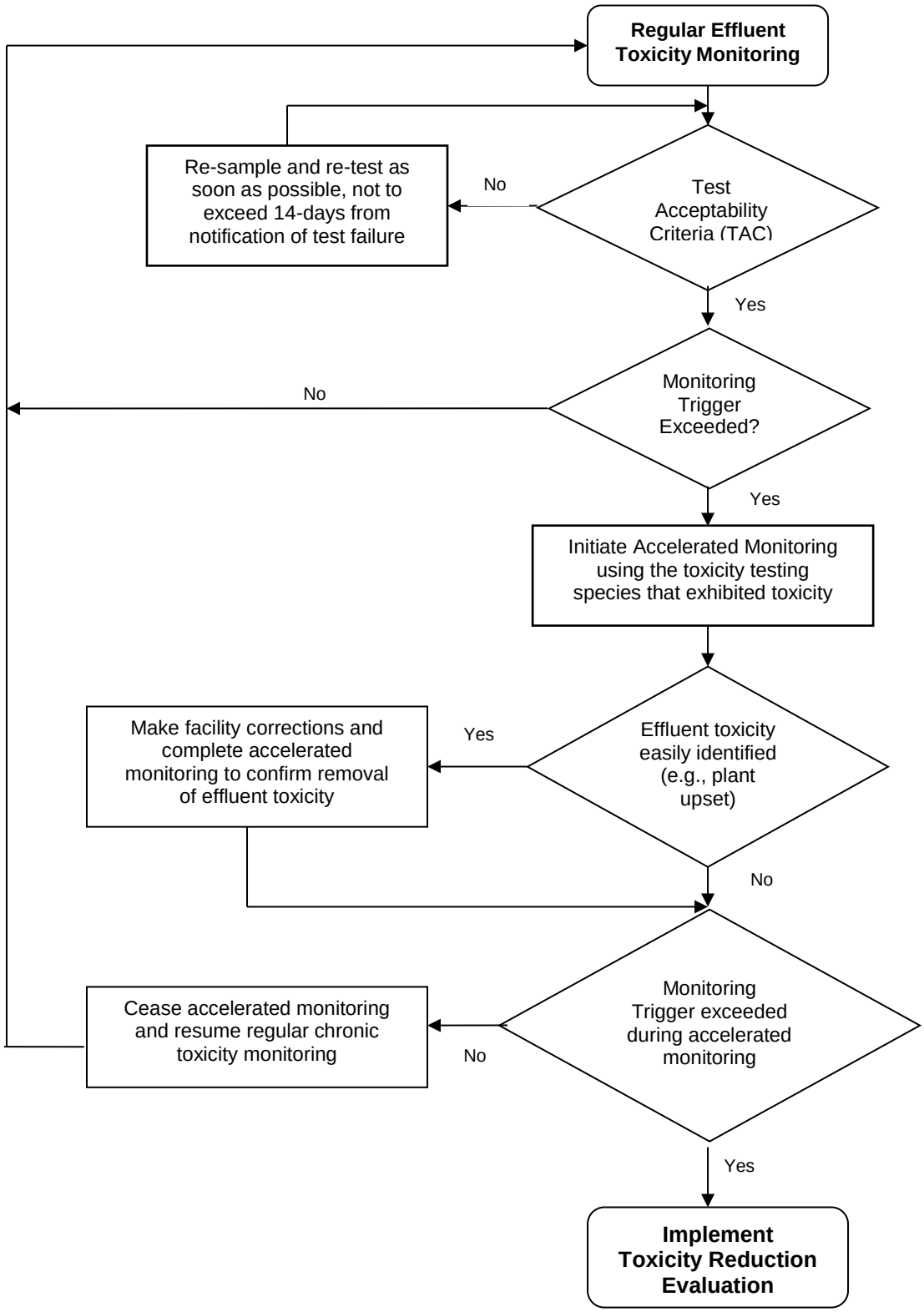

3. Best Management Practices and Pollution Prevention

a. **Mercury Pollution Prevention Plan (PPP).** On 29 March 2013 the Discharger submitted a PPP for mercury in accordance with previous Order R5-2012-0031. This Order requires the Discharger continue to implement the mercury PPP. In addition, this Order requires an evaluation of the effectiveness of the mercury PPP and submittal of a summary with the Report of Waste Discharge, due 1-year prior to the permit expiration date of this Order. The summary shall include, at minimum, a summary of the effectiveness of the PPP in the reduction of mercury in the discharge, a summary of mercury and methylmercury monitoring results, and discuss any updates to the mercury PPP

4. Construction, Operation, and Maintenance Specifications

a. **Filtration System Operating Specifications.** Turbidity is included as an operational specification as an indicator of the effectiveness of the filtration system for providing adequate disinfection. The tertiary treatment process utilized at this Facility is capable of reliably meeting a turbidity limitation of 0.2 NTU, not to be exceeded more than 5 percent of the time within a 24-hour period. Failure of the treatment system such that virus removal is impaired would normally result in increased particles in the effluent, which result in higher effluent turbidity and could impact UV dosage. Turbidity has a major advantage for monitoring filter performance, allowing immediate detection of filter failure and rapid corrective action. The operational specification requires that turbidity prior to disinfection shall not exceed 0.2 NTU more than 5 percent of the time and a daily maximum of 0.5 NTU.

b. **Ultraviolet Light (UV) Disinfection System Operating Specifications.** This Order requires that wastewater be oxidized, coagulated, filtered, and adequately disinfected pursuant to DDW reclamation criteria, Title 22, or equivalent. To ensure that the UV disinfection system is operated to achieve the required pathogen removal, this Order includes effluent limits for total coliform organisms, filtration system operating specifications, and UV disinfection system operating specifications. Compliance with total coliform effluent limits alone does not ensure that pathogens in the municipal wastewater have been deactivated by the UV disinfection system. Compliance with the effluent limits and the filtration system and UV disinfection operating specifications demonstrates compliance with the equivalency to Title 22 disinfection requirements.

The NWRI guidelines include UV operating specifications for compliance with Title 22. For water recycling in accordance with Title 22, the UV system shall be an approved system included in the *Treatment Technology Report for Recycled Water*, December 2009 (or a later version, as applicable) published by DDW. The UV system shall also conform to all requirements and operating specifications of the NWRI guidelines. A memorandum dated 1 November 2004 issued by DDW to Regional Water Board Executive Officers recommended that provisions be included in permits for water recycling treatment plants employing UV disinfection requiring dischargers to establish fixed cleaning frequency of lamp sleeves, as well as, include provisions that specify minimum delivered UV dose that must be maintained (per the NWRI guidelines).

For membrane filtration, the NWRI guidelines recommend a minimum hourly average UV dose of 80 mJ/cm^2. Therefore, this Order includes UV operating

specifications requiring a minimum hourly average UV does of 80 mJ/cm^2 and a minimum hourly average UV transmittance of 65 percent, per the NWRI guidelines. If the Discharger conducts a site-specific UV engineering study that demonstrates a lower UV dose meets a Title 22 equivalent virus removal, this Order may be reopened to revise the UV operating specifications accordingly.

5. Special Provisions for Publicly-Owned Treatment Works (POTW's)

a. **Pretreatment Requirements**

i. The federal CWA section 307(b), and federal regulations, 40 C.F.R. part 403, require publicly owned treatment works to develop an acceptable industrial pretreatment program. A pretreatment program is required to prevent the introduction of pollutants, which will interfere with treatment plant operations or sludge disposal and prevent pass through of pollutants that exceed water quality objectives, standards or permit limitations. Pretreatment requirements are imposed pursuant to 40 C.F.R. part 403.

ii. The Discharger has an approved U.S. EPA pretreatment program that includes 30 non-categorical SIU's and five CIU's.

iii. The Discharger shall implement and enforce its approved pretreatment program as it is an enforceable condition of this Order. If the Discharger fails to perform the pretreatment functions, the Central Valley Water Board, the State Water Board or U.S. EPA may take enforcement actions against the Discharger as authorized by the CWA.

b. **Collection System.** The State Water Board issued General Waste Discharge Requirements for Sanitary Sewer Systems, Water Quality Order 2006-0003-DWQ (General Order) on 2 May 2006. The State Water Board amended the Monitoring and Reporting Program for the General Order through Order WQ 2013-0058-EXEC on 6 August 2013. The General Order requires public agencies that own or operate sanitary sewer systems with greater than one mile of pipes or sewer lines to enroll for coverage under the General Order. The General Order requires agencies to develop sanitary sewer management plans (SSMP's) and report all sanitary sewer overflows (SSO's), among other requirements and prohibitions.

The General Order contains requirements for operation and maintenance of collection systems and for reporting and mitigating sanitary sewer overflows that are more extensive, and therefore, more stringent than the requirements under federal Standard Provisions. The Discharger and public agencies that are discharging wastewater into the Facility's collection system were required to obtain enrollment for regulation under the General Order by 1 December 2006.

c. **Resource Recovery from Anaerobically Digestible Material.** Some POTW's choose to accept organic material such as food waste, fats, oils, and grease into their anaerobic digesters for co-digestion to increase production of methane and other biogases for energy production and to prevent such materials from being discharged into the collection system, which could cause sanitary sewer overflows. The California Department of Resources Recycling and Recovery has proposed an exemption from requiring Process Facility/Transfer Station permits where this activity is regulated under WDR's or NPDES permits. The proposed exemption is restricted to anaerobically digestible material that has been prescreened, slurried, and processed/conveyed in a closed system to be co-digested with regular POTW

sludge. The proposed exemption requires that a POTW develop Standard Operating Procedures for the proper handling, processing, tracking, and management of the anaerobically digestible material before it is received by the POTW.

Standard Operating Procedures are required for POTW's that accept hauled food waste, fats, oil, and grease for injection into anaerobic digesters. The development and implementation of Standard Operating Procedures for management of these materials is intended to allow the California Department of Resources Recycling and Recovery to exempt this activity from separate and redundant permitting programs. If the POTW does not accept food waste, fats, oil, or grease for resource recovery purposes, it is not required to develop and implement Standard Operating Procedures.

The Discharger currently does not accept hauled-in ADM for direct injection into its anaerobic digester for co-digestion. However, if the Discharger proposes to receive hauled-in ADM for injection into its anaerobic digester for co-digestion, this provision requires the Discharger to notify the Central Valley Water Board and develop and implement SOP's for this activity prior to initiation of the hauling. The requirements of the SOP's are discussed in section VI.C.5.c of the Order.

6. Other Special Provisions

a. Consistent with Order R5-2012-0031, this Order requires the discharge to be oxidized, filtered, and adequately disinfected pursuant to DDW reclamation criteria, Title 22, or equivalent.

b. **Tertiary-level Treated Discharge Phase 3 (19.1 MGD).** The Discharger has requested a total expansion of allowable flows to be discharged up to 19.1 MGD year-round to the San Joaquin River. The Discharger must comply with each provision before the permitted tertiary effluent flow may be increased.

7. Compliance Schedules

a. **Compliance Schedule for Final Effluent limitations for Electrical Conductivity.** On 30 January 2012, the Discharger submitted a compliance schedule justification for Electrical Conductivity that included all items specified in the State Water Board's Compliance Schedule Policy. The Basin Plan states that, "Existing NPDES point source dischargers are low priority and subject to the compliance schedules for low priority discharges in Table IV-4.3." The TMDL requires that POTWs comply with the water quality objectives for EC by 28 July 2022, for wet through dry years and 28 July 2026 for critical years (Basin Plan, Section 19, Table IV-4.3, pg IV-32.03). The Discharger shall comply with a time schedule to ensure compliance with the final effluent limitations for Electrical Conductivity, in accordance with the Salinity and Boron TMDL. Final compliance is required by 28 July 2022, for wet through dry years and 28 July 2026 for critical years.

Since the reduction in effluent salinity is a complex issue that may require the development of new lower salinity water supplies or other long-term solutions, the compliance schedule is reasonable and necessary and has been carried forward from previous Order R5-2012-0031. The Discharger has been working toward reducing the salinity discharge to the San Joaquin River through implementation of a salinity source control program, pursuing lower salinity water supplies through coordination with the

Modesto Irrigation District and Turlock Irrigation District, and increasing wastewater recycling through implementation of the North Valley Regional Recycled Water Program. Consistent with the Central Valley Water Board's recommendations, this Order requires the Discharger to continue implementation of the salinity source control program including public outreach efforts, continue to secure available lower salinity water supplies, and implementation of the North Valley Regional Recycled Water Program to increase wastewater recycled water used. This Order also contains an interim performance based effluent limitation for EC.

The Central Valley Water Board adopted a Basin Plan Amendment on X June 2017, which would establish salinity water quality objectives in the Lower San Joaquin River from Merced River to Vernalis. The Basin Plan Amendment also modified the Salt and Boron TMDL to clarify that NPDES point source dischargers could participate in the real-time salinity management program in lieu of complying with the wasteload allocations. Therefore, the compliance schedule requires the Discharger to re-evaluate the method of compliance for electrical conductivity that considers ~~conduct a study evaluating~~ the feasibility of managing the Facility's discharge to the San Joaquin River in accordance with a real-time salinity management program that ensures the salinity water quality objectives are met at Vernalis. ~~If participation in a real-time salinity management program is feasible, the compliance schedule also requires submittal of a workplan and schedule to implement measures to participate in a real-time salinity management program.~~ The Discharger shall submit an updated Method of Compliance Workplan/Schedule to implement a project to participate in a real-time salinity management program or otherwise comply with the final effluent limitations for electrical conductivity. In addition, this Order includes a reopener provision to modify the salinity requirements, including this compliance schedule, based on the Discharger's re-evaluation of the method of compliance and also in accordance with the Basin Plan Amendment upon its approval ~~of the Basin Plan Amendment~~ by the State Water Board, USEPA, and the Office of Administrative Law.

VII. RATIONALE FOR MONITORING AND REPORTING REQUIREMENTS

CWA section 308 and 40 C.F.R. sections 122.41(h), (j)-(l), 122.44(i), and 122.48 require that all NPDES permits specify monitoring and reporting requirements. Water Code sections 13267 and 13383 also authorize the Central Valley Water Board to establish monitoring, inspection, entry, reporting, and recordkeeping requirements. The MRP, Attachment E, of this Order establishes monitoring, reporting, and recordkeeping requirements that implement federal and State requirements. The following provides the rationale for the monitoring and reporting requirements contained in the MRP for this facility.

A. Influent Monitoring

1. Influent monitoring is required to collect data on the characteristics of the wastewater and to assess compliance with effluent limitations (e.g., BOD_5 and TSS reduction requirements). The monitoring frequencies for flow (continuous), BOD_5 (daily), electrical conductivity (weekly), and TSS (daily) have been retained from Order R5-2012-0031.

2. Order R5-2012-0031 required weekly pH monitoring of the influent. This Order establishes daily pH of the influent. The Central Valley Water Board finds that this frequency is necessary to characterize the influent.

B. Effluent Monitoring

1. Pursuant to the requirements of 40 C.F.R. section 122.44(i)(2) effluent monitoring is required for all constituents with effluent limitations. Effluent monitoring is necessary to assess compliance with effluent limitations, assess the effectiveness of the treatment process, and assess the impacts of the discharge on the receiving stream and groundwater.

2. Order R5-2012-0031 required monitoring of secondary treated effluent at Monitoring Location EFF-001A and monitoring of tertiary treated effluent at Monitoring Location EFF-001B. Following the completion of the Phase 2 upgrade, the Facility is no longer capable of discharging secondary treated wastewater. Therefore, monitoring requirements at Monitoring Location EFF-001A have not been retained in this Order and Monitoring Location EFF-001B has been renamed Monitoring Location EFF-001.

3. Effluent monitoring frequencies and sample types for flow (continuous), BOD_5 (daily), pH (continuous), TSS (daily), mercury (monthly), ammonia (weekly), boron (monthly), chloride (monthly), chlorpyrifos (annually), diazinon (annually), electrical conductivity (twice per month), hardness (monthly), methyl mercury (monthly), nitrate plus nitrite (weekly), and total dissolved solids (monthly) have been retained from Order R5-2012-0031 to determine compliance with effluent limitations, where applicable, and characterize the effluent for these parameters.

4. This Order reduces the monitoring frequency for dissolved oxygen and temperature from continuous to weekly. The Central Valley Water Board finds that this frequency is sufficient to characterize the effluent for these parameters.

5. Tertiary treated effluent monitoring data collected over the term of Order R5-2012-0031 for copper, aluminum, iron, manganese, and molybdenum did not demonstrate reasonable potential to exceed water quality objectives/criteria. Thus, effluent limitations ~~specific monitoring requirements~~ for these parameters have been removed and specific monitoring requirements are not ~~been~~ retained from Order R5-2012-0031.

6. Order R5-2012-0031 required weekly effluent phosphorus monitoring. The Central Valley Water Board finds that phosphorus monitoring is not necessary to determine compliance with conditions established in this Order. Thus, monitoring requirements for phosphorus have not been retained from Order R5-2012-0031.

7. Order R5-2012-0031 required weekly effluent monitoring for nitrate and nitrite. As discussed in section IV.C.3 of this Fact Sheet, this Order establishes effluent limitations for nitrate plus nitrite as a single parameter. Therefore, this Order removes individual monitoring requirements for nitrate and nitrite and retains the weekly monitoring requirement for nitrate plus nitrite in order to determine compliance with the applicable effluent limitations.

8. Order R5-2012-0031 required daily monitoring for total coliform organisms in the tertiary effluent at Monitoring Location EFF-001B. This Order moves the point of compliance from Monitoring Location EFF-001B to internal compliance points following the UV disinfection system (Monitoring Locations UVS-001A and UVS-002A). The Central Valley Water Board finds that daily total coliform monitoring at Monitoring Locations UVS-001A and UVS-002A is sufficient for determining compliance following the disinfection process.

9. In accordance with section 1.3 of the SIP, periodic monitoring is required for priority pollutants for which criteria or objectives apply and for which no effluent limitations have

been established. This Order requires effluent monitoring for priority pollutants and other constituents of concern monthly during the year 2020. This monitoring frequency has been retained from Order R5-2012-0031. See section IX.D of the Monitoring and Reporting Program (Attachment E) for more detailed requirements related to performing priority pollutant monitoring.

10. Water Code section 13176, subdivision (a), states: "*The analysis of any material required by [Water Code sections 13000-16104] shall be performed by a laboratory that has accreditation or certification pursuant to Article 3 (commencing with section 100825) of Chapter 4 of Part 1 of Division 101 of the Health and Safety Code.*" DDW certifies laboratories through its Environmental Laboratory Accreditation Program (ELAP).

    Section 13176 cannot be interpreted in a manner that would violate federal holding time requirements that apply to NPDES permits pursuant to the CWA (Wat. Code §§ 13370, subd. (c), 13372, 13377). Section 13176 is inapplicable to NPDES permits to the extent it is inconsistent with CWA requirements. (Wat. Code § 13372, subd. (a).) The holding time requirements are 15 minutes for chlorine residual, dissolved oxygen, and pH, and immediate analysis is required for temperature. (40 C.F.R. § 136.3(e), Table II). The Discharger maintains an ELAP certified laboratory on-site and conducts analyses for dissolved oxygen, and pH within the required 15 minute hold times.

11. This Order requires that pollutants be analyzed using the analytical methods described in 40 C.F.R. part 136 or a U.S. EPA approved Alternate Testing Procedure. However, where no methods are specified for a standard, an alternate method can be approved by the Central Valley Water Board. This Order requires either EPA 8141A or EPA 625M methods be utilized for chlorpyrifos and diazinon. These alternate analytical methods are necessary to determine compliance with the effluent limits for these constituents. Basin Plan water quality objectives for chlorpyrifos and diazinon are 0.015 µg/L and 0.10 µg/L, respectively, as a 4-day average (see Attachment F, section IV.C.3 for more information). Therefore, chlorpyrifos and diazinon must be analyzed using analytical methods that have a lower MDL than the Basin Plan water quality objectives.

C. Whole Effluent Toxicity Testing Requirements

1. **Acute Toxicity.** Order R5-2012-0031 required monthly 96-hour bioassay testing. Acute toxicity testing conducted on the tertiary treated wastewater resulted in 100% survival. Based on the testing results and the high level of treatment provided by the upgraded treatment Facility, this Order requires quarterly testing to demonstrate compliance with the effluent limitation for acute toxicity.

2. **Chronic Toxicity.** Order R5-2012-0031 required monthly chronic whole effluent toxicity testing. As discussed in section IV.C.5 of this Fact Sheet, the discharge does not exhibit reasonable potential to cause or contribute to an in-stream excursion above the Basin Plan's narrative toxicity objective. Based on the testing results and the high level of treatment provided by the upgraded treatment Facility, this Order requires quarterly testing in order to demonstrate compliance with the Basin Plan's narrative toxicity objective.

D. Receiving Water Monitoring

1. Surface Water

a. Receiving water monitoring is necessary to assess compliance with receiving water limitations and to assess the impacts of the discharge on the receiving stream.

b. Receiving water monitoring frequencies and sample types at Monitoring Location RSW-001 for flow (continuous), dissolved oxygen (weekly), electrical conductivity (weekly), hardness (monthly), pH (weekly), temperature (weekly), total dissolved solids (monthly), and turbidity (weekly) have been retained from Order R5-2012-0031 to determine compliance with applicable receiving water limitations and characterize the receiving water for these parameters.

c. Receiving water monitoring frequencies and sample types at Monitoring Location RSW-002 for dissolved oxygen (weekly), electrical conductivity (weekly), pH (weekly), temperature (weekly), total dissolved solids (monthly) and turbidity (weekly) have been retained from Order R5-2012-0031 to determine compliance with applicable receiving water limitations and characterize the receiving water for these parameters. Downstream receiving water monitoring stations RSW-003 and RSW-004 have been removed. Due to the high quality effluent required by this Order, these downstream monitoring locations are no longer necessary to evaluate impacts to the receiving water.

d. Order R5-2012-0031 required monthly monitoring for fecal coliform in the receiving water at Monitoring Locations RSW-001 and RSW-002 when discharging secondary treated wastewater. Following the completion of the Phase 2 upgrade, the Facility is no longer capable of discharging secondary treated wastewater to the San Joaquin River. Therefore, receiving water monitoring requirements for fecal coliform organisms have not been retained in this Order.

e. In accordance with section 1.3 of the SIP, periodic monitoring is required for priority pollutants for which criteria or objectives apply and for which no effluent limitations have been established. This Order requires upstream receiving water monitoring for priority pollutants and other pollutants of concern monthly during the year 2020, concurrent with effluent monitoring, in order to collect data to conduct an RPA for the next permit renewal. See section IX.D of the Monitoring and Reporting Program (Attachment E) for more detailed requirements related to performing priority pollutant monitoring.

2. Groundwater – Not Applicable

E. Other Monitoring Requirements

1. Biosolids Monitoring – Not Applicable

Biosolids monitoring requirements for the Facility are included in WDR Order 94-030.

2. Water Supply Monitoring

Water supply monitoring is required to evaluate the source of constituents in the wastewater. Monitoring frequencies and sample types for electrical conductivity (quarterly), standard minerals (annually), and total dissolved solids (quarterly) have been retained from Order R5-2012-0031.

3. UV Disinfection System Monitoring

UV system monitoring and reporting are required to ensure that the UV system is operated to adequately inactivate pathogens in the tertiary treated wastewater. UV disinfection system monitoring is imposed to achieve equivalency to requirements established by DDW and the NWRI guidelines.

4. **Land Discharge Monitoring – Not Applicable**

Land discharge monitoring requirements for the Facility are included in WDR Order 99-112.

5. **Discharge Monitoring Report-Quality Assurance (DMR-QA) Study Program**

Under the authority of section 308 of the CWA (33 U.S.C. § 1318), U.S. EPA requires all dischargers under the NPDES Program to participate in the annual DMR-QA Study Program. The DMR-QA Study evaluates the analytical ability of laboratories that routinely perform or support self-monitoring analyses required by NPDES permits. There are two options to satisfy the requirements of the DMR-QA Study Program: (1) The Discharger can obtain and analyze a DMR-QA sample as part of the DMR-QA Study; or (2) Per the waiver issued by U.S. EPA to the State Water Board, the Discharger can submit the results of the most recent Water Pollution Performance Evaluation Study from their own laboratories or their contract laboratories. A Water Pollution Performance Evaluation Study is similar to the DMR-QA Study. Thus, it also evaluates a laboratory's ability to analyze wastewater samples to produce quality data that ensure the integrity of the NPDES Program. The Discharger shall submit annually the results of the DMR-QA Study or the results of the most recent Water Pollution Performance Evaluation Study to the State Water Board. The State Water Board's Quality Assurance Program Officer will send the DMR-QA Study results or the results of the most recent Water Pollution Performance Evaluation Study to U.S. EPA's DMR-QA Coordinator and Quality Assurance Manager.

VIII. PUBLIC PARTICIPATION

The Central Valley Water Board has considered the issuance of WDR's that will serve as an NPDES permit for the City of Modesto Water Quality Control Facility. As a step in the WDR adoption process, the Central Valley Water Board staff has developed tentative WDR's and has encouraged public participation in the WDR adoption process.

A. Notification of Interested Parties

The Central Valley Water Board notified the Discharger and interested agencies and persons of its intent to prescribe WDR's for the discharge and provided an opportunity to submit written comments and recommendations. Notification was provided through the ~~following~~ ~~**<Describe Notification Process (e.g., newspaper name and date)>**~~posting of the Notice of Public Hearing concerning the WDR's at the Modesto City Hall (government center) on 17 March 2017. The Notice of Public Hearing was also published in the Modesto Bee on 16 March 2017 and on the Central Valley Water Board's website.

The public had access to the agenda and any changes in dates and locations through the Central Valley Water Board's website at:
http://www.waterboards.ca.gov/centralvalley/board_info/meetings/

B. Written Comments

Interested persons were invited to submit written comments concerning tentative WDR's as provided through the notification process. Comments were due either in person or by mail to the Executive Office at the Central Valley Water Board at the address on the cover page of this Order.

To be fully responded to by staff and considered by the Central Valley Water Board, the written comments were due at the Central Valley Water Board office by 5:00 p.m. on 10 April 2017.

C. Public Hearing

The Central Valley Water Board held a public hearing on the tentative WDR's during its regular Board meeting on the following date and time and at the following location:

Date:	8/9 June 2017
Time:	8:30 a.m.
Location:	Regional Water Quality Control Board, Central Valley Region 11020 Sun Center Dr., Suite #200 Rancho Cordova, CA 95670

Interested persons were invited to attend. At the public hearing, the Central Valley Water Board heard testimony pertinent to the discharge, WDR's, and permit. For accuracy of the record, important testimony was requested in writing.

D. Reconsideration of Waste Discharge Requirements

Any aggrieved person may petition the State Water Board to review the decision of the Central Valley Water Board regarding the final WDR's. The petition must be received by the State Water Board at the following address within 30 calendar days of the Central Valley Water Board's action:

State Water Resources Control Board
Office of Chief Counsel
P.O. Box 100, 1001 I Street
Sacramento, CA 95812-0100

For instructions on how to file a petition for review, see
http://www.waterboards.ca.gov/public_notices/petitions/water_quality/wqpetition_instr.shtml

E. Information and Copying

The Report of Waste Discharge, other supporting documents, and comments received are on file and may be inspected at the address above at any time between 8:30 a.m. and 4:45 p.m., Monday through Friday. Copying of documents may be arranged through the Central Valley Water Board by calling (916) 464-3291.

F. Register of Interested Persons

Any person interested in being placed on the mailing list for information regarding the WDR's and NPDES permit should contact the Central Valley Water Board, reference this facility, and provide a name, address, and phone number.

G. Additional Information

Requests for additional information or questions regarding this order should be directed to Tyson Pelkofer at (916) 464-4853.

ATTACHMENT G – SUMMARY OF REASONABLE POTENTIAL ANALYSIS

Constituent	Units	MEC	B	C	CMC	CCC	Water & Org	Org. Only	Basin Plan	MCL	Reasonable Potential
Aluminum, Total Recoverable	µg/L	29[1]	322[1]	200	750[2]	--	--	--	--	200	No[3]
Ammonia Nitrogen, Total (as N)	mg/L	0.46	NA	2.14	2.14[2]	2.65[4]	--	--	--	--	Yes[3]
Boron	mg/L	220	680	800	--	--	--	--	800	--	No
Chloride	mg/L	227	NA	230	860[2]	230[5]	--	--	--	250	No
Copper, Total Recoverable	µg/L	3.9	5.8	12	18	12	1,300	--	--	1,000	No
Electrical Conductivity @ 25°C	µmhos/cm	1,121[1]	2,100[1]	700/1,000[6]	--	--	--	--	700/1,000[6]	--	Yes[3]
Iron, Total Recoverable	µg/L	64[1]	763[1]	300	--	--	--	--	--	300	No[3]
Manganese, Total Recoverable	µg/L	12[1]	200[1]	50	--	--	--	--	--	50	No[3]
Mercury, Total Recoverable	µg/L	0.0011	0.0042	0.050	--	--	0.050	0.051	--	2.0	No[3]
Molybdenum, Total Recoverable	µg/L	5.3	8.0	10	--	--	--	--	10	--	No
Nitrate, Total (as N)	mg/L	6.9	NA	10	--	--	--	--	--	10	Yes[3]
Nitrite, Total (as N)	mg/L	0.010	NA	1.0	--	--	--	--	--	1.0	No
Sulfate	mg/L	36[1]	210[1]	250	--	--	--	--	--	250	No
Total Dissolved Solids	mg/L	659[1]	1,300[1]	500	--	--	--	--	--	500	No[3]

Constituent	Units	MEC	B	C	CMC	CCC	Water & Org	Org. Only	Basin Plan	MCL	Reasonable Potential

General Note: All inorganic concentrations are given as a total recoverable.
MEC = Maximum Effluent Concentration
B = Maximum Receiving Water Concentration or lowest detection level, if non-detect
C = Criterion used for Reasonable Potential Analysis
CMC = Criterion Maximum Concentration (CTR or NTR)
CCC = Criterion Continuous Concentration (CTR or NTR)
Water & Org = Human Health Criterion for Consumption of Water & Organisms (CTR or NTR)
Org. Only = Human Health Criterion for Consumption of Organisms Only (CTR or NTR)
Basin Plan = Numeric Site-specific Basin Plan Water Quality Objective
MCL = Drinking Water Standards Maximum Contaminant Level
NA = Not Available

Footnotes:
(1) Represents the maximum observed annual average concentration for comparison with the MCL.
(2) U.S. EPA National Recommended Ambient Water Quality Criteria, Freshwater Aquatic Life Protection, 1-hour average.
(3) See section IV.C.3 of the Fact Sheet for a discussion of the RPA results.
(4) U.S. EPA National Recommended Ambient Water Quality Criteria, Freshwater Aquatic Life Protection, 30-day average.
(5) U.S. EPA National Recommended Ambient Water Quality Criteria, Freshwater Aquatic Life Protection, 4-day average.

ATTACHMENT H – CALCULATION OF WQBEL'S

Human Health WQBEL's Calculations									
Parameter	**Units**	**Criteria**	**Mean Background Concentration**	**Dilution Factor**	**MDEL/AMEL Multiplier**	**AMEL Multiplier**	**AMEL**	**MDEL**	**AWEL**
Nitrate Plus Nitrite, Total (as N)	mg/L	10	NA	--	2.39	1.83	10	--	19

NA = Not Available

Aquatic Life WQBEL's Calculations															
Parameter	**Units**	**Criteria**		**Dilution Factors**		**Aquatic Life Calculations**							**Final Effluent Limitations**		
		CMC	**CCC**	**CMC**	**CCC**	**ECA Multiplier$_{acute}$**	**LTA$_{acute}$**	**ECA Multiplier$_{chronic}$**	**LTA$_{chronic}$**	**AMEL Multiplier$_{95}$**	**AWEL Multiplier**	**MDEL Multiplier$_{99}$**	**AMEL[1]**	**AWEL[2]**	**MDEL[3]**
Ammonia Nitrogen, Total (as N)	mg/L	2.14	2.65	--	--	0.18	0.4	0.630	1.67	2.09	4.33	--	0.80	1.7	--
Chlorpyrifos	µg/L	0.025	0.015	--	--	0.32	0.0080	0.53	0.0079	1.55	2.68	--	0.012	0.021	--
Diazinon	µg/L	0.16	0.10	--	--	0.32	0.051	0.53	0.053	1.55	2.68	--	0.079	0.14	--

1 Average Monthly Effluent Limitations are calculated according to section 1.4 of the SIP using a 95th percentile occurrence probability.
2 Average Weekly Effluent Limitations are calculated according to section 1.4 of the SIP using a 98th percentile occurrence probability.
3 Maximum Daily Effluent Limitations are calculated according to section 1.4 of the SIP using a 99th percentile occurrence probability.