Central Valley Regional Water Quality Control Board

XX June 2022

Ben Koehler
Acting WQC Plant Manager
City of Modesto, Utilities Department,
Wastewater Division
P.O Box 642
Modesto, CA 95354

VIA EMAIL:
bkoehler@modestogov.com

CERTIFIED MAIL
<XXXX XXXX XXXX XXXX>

TENTATIVE NOTICE OF APPLICABILITY (NOA); MUNICIPAL GENERAL WASTE DISCHARGE REQUIREMENTS ORDER R5-2017-0085-02, NATIONAL POLLUTANT DISCHARGE ELIMINATION SYSTEM (NPDES) CAG585001; CITY OF MODESTO, WATER QUALITY CONTROL FACILITY, STANISLAUS COUNTY

Our office received the Application/Report of Waste Discharge (application) dated 17 September 2020 from the City of Modesto (Discharger), for discharge of tertiary treated domestic wastewater to surface water from the Water Quality Control Facility (Facility) to the San Joaquin River. Central Valley Board staff reviewed the application and determined the Facility is eligible for coverage under the General Order for Municipal Wastewater Dischargers That Meet Objectives/Criteria at the Point of Discharge to Surface Water Order R5-2017-0085-02 (Municipal General Order). This Facility's discharge is assigned Municipal General Order enrollee number R5-2017-0085-020 and National Pollutant Discharge Elimination System (NPDES) Permit CAG585001. Please reference your Municipal General Order enrollee number, **R5-2017-0085-020**, in your correspondence and submitted documents.

Discharges to the San Joaquin River from the Facility are currently regulated by an individual NPDES permit, Order R5-2017-0064 (NPDES CA0079103) adopted by the Central Valley Regional Water Quality Control Board (Central Valley Water Board) on 9 June 2017, with an effective date of 1 August 2017. This NOA, authorizing coverage under the Municipal General Order, shall become effective on **1 August 2022**, and the current individual NPDES permit will be rescinded by a separate action of the Central Valley Water Board. To meet the provisions contained in division 7 of the Water Code (commencing with section 13000) and regulations adopted thereunder, and the provisions of the Clean Water Act and regulations and guidelines adopted thereunder, the Discharger shall comply with the requirements contained in the Municipal General Order and as specified in this NOA. This action in no way prevents the Central Valley Water Board from taking enforcement action for past violations of Order R5-2017-0064.

The enclosed Municipal General Order is not currently available online but can be requested by email or phone from the NPDES Permitting Contacts webpage (https://www.waterboards.ca.gov/centralvalley/water_issues/waste_to_surface_water/contacts). You are urged to familiarize yourself with the entire contents of the enclosed document.

The Monitoring and Reporting Program, Attachment E to the Municipal General Order, contains the general monitoring and reporting requirements. The Discharger specific monitoring and reporting requirements are included within this NOA as Appendix D. Only the monitoring and reporting requirements specifically listed in Appendix D of this NOA are applicable to this Facility. Additionally, please note the new requirement in Appendix D, Section X.B.6.c of this NOA to attach all final laboratory reports from all contracted commercial laboratories with your Self-Monitoring Reports (SMRs).

The discharge of treated domestic wastewater shall be in accordance with the requirements contained in the Municipal General Order, as specified in this NOA.

Table 1. Facility Information

WDID	5C500102001
CIWQS Facility Place ID	241146 (Sutter Avenue Primary Treatment Facility) 273037 (Jennings Road Secondary/Tertiary Facility)
Discharger	City of Modesto
Name of Facility	Water Quality Control Facility
Facility Street Address	1221 Sutter Avenue (Primary Facility) 7007 Jennings Road (Secondary/Tertiary Facility)
Facility City, State, Zip Code	Modesto, CA 95351
Facility County	Stanislaus
Facility Contact, Title and Phone	Ben Koehler, Water Quality Control Superintendent/Chief Plant Operator (209) 652-7782
Authorized Person to Sign and Submit Reports	Same as Contact Above
Mailing Address	Same as Primary Facility Address
Billing Address	Same as Primary Facility Address
Type of Facility	Publicly Owned Treatment Works (POTW)
Major or Minor Facility	Major
Threat to Water Quality	1
Complexity	A
Pretreatment Program	Yes
Recycling Requirements	Recycling regulated under Waste Discharge Requirements (WDR) Order 99-112 or future updated Order.
Facility Design Average Dry Weather Flow (ADWF)	Existing Plant: 14.9 million gallons per day (MGD), average daily discharge flow Expanded Plant: 19.1 MGD, average daily discharge flow
Permitted ADWF	14.9 MGD
Watershed	Middle San Joaquin, Lower Merced, Lower Stanislaus
Receiving Water	San Joaquin River
Receiving Water Type	Inland Surface Water
Discharge Point 001	Latitude: 37° 31’ 20” N, Longitude: 121° 05’ 47” W

I. FACILITY INFORMATION

The Discharger provides sewerage service for a population of approximately 272,000 for the City of Modesto, the community of Empire, and a portion of the City of Ceres. The Facility consists of two different treatment facilities; a primary treatment facility and a secondary/tertiary treatment facility located approximately 6.5 miles to the southwest of the primary treatment facility.

Description of Wastewater and Biosolids Treatment and Controls

The treatment system at the Facility consists of two separate primary and secondary/tertiary treatment facilities. The primary treatment plant consists of screening, grit removal, and primary clarification. Sludge from the clarifiers is transferred to thickeners, then processed and stabilized through anaerobic digesters. Digested sludge is transferred to holding tanks where it is periodically drawn to unlined drying beds, with supernatant flows routed to the septage disposal station for blending with influent wastewater. The Discharger applies the stabilized sludge as a soil amendment on their 2,526-acre ranch, which is regulated by separate WDR Order 94-030.

After clarification, primary effluent is directed to the secondary/tertiary treatment facility where the wastewater receives secondary treatment for irrigation of pastureland or receives tertiary filtration and ultraviolet light disinfection for discharge to the San Joaquin River or the Delta-Mendota Canal. Discharges to the Delta-Mendota Canal are regulated by Order R5-2022-0034 (NPDES No. CA0085316). For the secondary treatment system that discharges to land per Order 94-030, approximately half of the primary effluent receives treatment with fixed film reactors and then is combined with primary effluent in an aerated recirculation channel. Flow in the recirculation channel is then distributed to three parallel facultative ponds for further treatment, and then transferred to one of two storage ponds before being applied to the Discharger's 2,526-acre ranch at agronomic rates.

The Facility's tertiary treatment facility consists of two parallel two-step membrane bioreactor (MBR) facilities. The Phase 1A facility consists of an oxidation ditch that provides activated sludge biological nutrient removal treatment, reducing biochemical oxygen demand (BOD_5) and providing nitrogen removal (i.e., nitrification/denitrification). The oxidation ditch is followed by membrane filtration and ultraviolet light (UV) radiation that disinfects the filtered wastewater prior to storage or discharge. Phase 1A construction of the tertiary treatment facilities (2.3 MGD) was completed on 1 July 2010. The Phase 2 facility consists of aeration basins for activated sludge biological nutrient removal treatment followed by membrane filtration and UV disinfection. The Phase 2 facility provides a tertiary treatment capacity of 12.6 MGD and was completed in the spring of 2017. The current total tertiary filtration average dry weather flow capacity is 14.9 MGD. The tertiary treated wastewater may be reused on the Discharger's 2,526-acre ranch or discharged to the San Joaquin River. In addition, the Discharger has partnered with the City of Turlock and the Del Puerto Water District for the North Valley Regional Recycled Water Program. A separate NPDES permit CA0085316 allows the Facility to discharge up to 14.9 MGD of tertiary treated recycled water via a pipeline to the Delta-Mendota Canal, where it is beneficially reused for agricultural irrigation. The Discharger primarily discharges to the Delta-Mendota Canal, and discharges to the San Joaquin River occur only when a discharge to the Delta-Mendota Canal is

infeasible.

The Discharger separates cannery wastes from the domestic wastewater. A separate 60-inch outfall transports cannery wastewaters to the ranch land located next to the secondary-level treatment facility. The cannery wastewater is applied directly to the ranch land at agronomic rates during the canning season (July – September). Land application of cannery and secondary wastewaters to the ranch land is regulated by separate Order 99-112.

Planned Changes

The Discharger previously conducted an antidegradation analysis for the full Phase 3 build-out discharge of 19.1 MGD. With adoption of Order R5-2017-0064 the Central Valley Water Board authorized the discharge up to 19.1 MGD, contingent upon the Discharger constructing the necessary facility upgrades. Phases 4 and 5 are planned for the future with a full build-out tertiary treatment capacity of 27.3 MGD.

II. RECEIVING WATER BENEFICIAL USES

This NOA authorizes the discharge from Discharge Point 001 to the San Joaquin River, which is a major tributary to the Sacramento – San Joaquin Delta that drains approximately 8.7 million acres in California's Central Valley. The San Joaquin River watershed is bounded by the Sierra Nevada Mountains on the east, the Coast Ranges on the west, the Delta to the north, and the Tulare Lake Basin to the south. According to the Water Quality Control Plan for the Sacramento River and San Joaquin River Basin (Basin Plan) the following beneficial uses apply to the San Joaquin River from the mouth of the Merced River to Vernalis:

Table 1. Basin Plan Beneficial Uses

Discharge Point	Receiving Water Name	Beneficial Uses
001	San Joaquin River	**Existing:** Municipal and domestic water supply (MUN) Agricultural Supply (AGR) Industrial Process Supply (PRO) Water Contact Recreation (REC-1) Non-contact Water Recreation (REC-2) Warm Freshwater Habitat (WARM) Wildlife Habitat (WILD) Migration of Aquatic Organisms (MIGR) Spawning, Reproduction, and/or Early Development (SPWN)

The San Joaquin River is listed on the Clean Water Act 303(d) List of impaired water bodies for constituents identified in Table 2 below. This NOA includes Water Quality-Based Effluent Limitations (WQBELs) for discharges to the San Joaquin River at Discharge Point 001 that are consistent with the assumptions and considerations of the applicable WLAs in each TMDL.

Table 2. 303(d) List for the San Joaquin River (Merced River to Tuolumne River)

Pollutant	Potential Sources	TMDL Status
alpha-BHC	Source Unknown	Not Completed, expected in 2027
Boron	Source Unknown	Completed in 2007
Chlorpyrifos	Agriculture	Completed in 2006
Diazinon	Agriculture	Completed in 2006
DDE	Source Unknown	Not Completed
DDT	Source Unknown	Not Completed
Electrical Conductivity	Source Unknown	Not Completed
Group A Pesticides	Source Unknown	Not Completed
Mercury	Source Unknown	Not Completed
Temperature	Source Unknown	Not Completed
Unknown Toxicity	Source Unknown	Not Completed

The 303(d) listings and TMDLs have been considered in the development of this NOA. A pollutant-by-pollutant evaluation of each pollutant of concern is described in section I.C in Appendix C of this NOA.

III. DISCHARGE PROHIBITIONS

Discharge prohibitions are contained in section IV of the Municipal General Order. Only the discharge prohibitions listed below are applicable to this Facility.

A. The discharge of wastes, other than those described in section I.A and meeting the eligibility criteria in section I.B of the Municipal General Order, is prohibited unless the Discharger obtains coverage under another general or individual Order that regulates the discharge of such wastes. (see Municipal General Order section IV.A)

B. The by-pass or overflow of wastes to surface waters is prohibited, except as allowed by Federal Standard Provisions sections I.G. and I.H in Attachment D, Standard Provisions, of the Municipal General Order. (see Municipal General Order section IV.B)

C. Neither the discharge nor its treatment shall create a nuisance as defined in section 13050 of the Water Code. (See Municipal General Order section IV. C)

D. **Average Dry Weather Flow.** Discharges to the San Joaquin River exceeding an average dry weather flow of 14.9 MGD are prohibited. (See Municipal General Order section IV.D).

IV. EFFLUENT LIMITATIONS

The Discharger shall maintain compliance with the following effluent limitations at Discharge Point 001. Effluent limitations are provided in the Municipal General Order. Only the effluent limitations listed below in Table 3 and items 1-7 are applicable to this Facility. Unless otherwise specified in this NOA, compliance shall be measured at Monitoring Location EFF-001B, as described in the Monitoring and Reporting Program, Appendix D of this NOA. The Discharger shall maintain compliance with the effluent limitations specified in Table 3 and items 1-7 below.

Table 3. Effluent Limitations

Parameter	Units	Average Monthly	Average Weekly	Municipal General Order Section Reference
Biochemical Oxygen Demand (5-day @ 20°Celcius) (BOD_5)	milligrams per liter (mg/L)	10	15	V.A.1.a. ii.(a) Table 4
Total Suspended Solids (TSS)	mg/L	10	15	V.A.1.a. ii.(a) Table 4
Ammonia Nitrogen, Total (as N)	mg/L	1.4	3.1	V.A.1.c.v Table 17D
Nitrate plus Nitrite, Total (as N)	mg/L	10	13	V.A.1.c.vi Table 19B

1. **pH (Municipal General Order section V.A.1.c.iv.(a)).** The pH shall at all times be within the range of 6.5 and 8.5.
2. **Percent Removal (Municipal General Order section V.A.1.a.ii.(b).(1)).** The average monthly percent removal of BOD_5 and TSS shall not be less than 85 percent.
3. **Total Coliform Organisms (Municipal General Order section V.A.1.a.ii.(c)).** (Measured at UVS-001A and UVS-002A). Effluent total coliform organisms shall not exceed:
   i. 2.2 most probable number per 100 milliliters (MPN/100 mL), as a 7-day median;
   ii. 23 MPN/100 mL, more than once in any 30-day period; and
   iii. 240 MPN/100 mL, at any time.
4. **Whole Effluent Toxicity, Acute (Municipal General Order section V.A.1.c.i).** Survival of aquatic organisms in 96-hour bioassays of undiluted waste shall be no less than:
   i. 70%, minimum for any one bioassay; and
   ii. 90%, median for any three consecutive bioassays**.**
5. **Electrical Conductivity (Municipal General Order section V.A.1.c.viii.(a). Table 21).**
   The effluent electrical conductivity shall not exceed the calendar annual average effluent limitation of 1,250 micromhos per centimeter (µmhos/cm).
6. **Diazinon and Chlorpyrifos.** Effluent diazinon and chlorpyrifos concentrations shall not exceed the sum of one (1.0) as identified below:
   i. ***Average Monthly Effluent Limitation (AMEL)***
   $S_{AMEL} = C_{D\ M\text{-}avg}/0.079 + C_{C\ M\text{-}avg}/0.012 \leq 1.0$
   $C_{D\ M\text{-}AVG}$ = average monthly diazinon effluent concentration in µg/L.
   $C_{C\ M\text{-}AVG}$ = average monthly chlorpyrifos effluent concentration in µg/L.

ii. ***Average Weekly Effluent Limitation (AWEL)***

$S_{AWEL} = C_{D\ W\text{-}avg}/0.14 + C_{C\ W\text{-}avg}/0.021 \leq 1.0$
$C_{D\ W\text{-}AVG}$ = average weekly diazinon effluent concentration in µg/L.
$C_{C\ W\text{-}AVG}$ = average weekly chlorpyrifos effluent concentration in µg/L.

7. Total Mercury (Municipal General Order section V.A.1.c.xi).
The effluent total mercury loading mass shall not exceed the annual average effluent limitation of 0.46 pounds per year (lbs/year).

V. RECEIVING WATER LIMITATIONS

1. **Surface Water Limitations (Municipal General Order section VI.A).**
The Municipal General Order includes receiving surface water limitations in Section VI.A. Based on the information provided in the NOI, only the following receiving surface water limitations listed in Municipal General Order Section VI.A are applicable to the Facility.

- Bacteria (VI.A.2)
- Biostimulatory Substances (VI.A.3);
- Chemical Constituents (VI.A.4);
- Color (VI.A.5);
- Dissolved Oxygen (VI.A.6.a.i, ii, and iv);
- Floating Material (VI.A.7);
- Oil and Grease (VI.A.8);
- pH (VI.A.9.a);
- Pesticides (VI.A.10);
- Radioactivity (VI.A.11);
- Suspended Sediments (VI.A.12);
- Settleable Substances (VI.A.13);
- Suspended Material (VI.A.14);
- Taste and Odors (VI.A.15);
- Temperature (VI.A.16.a);
- Toxicity (VI.A.17); and
- Turbidity (VI.A.18.a).

2. **Groundwater Limitations (Municipal General Order section VI.B). - Not Applicable**

VI. MONITORING AND REPORTING

Monitoring and reporting program requirements are contained in Appendix D of this NOA.

VII. PROVISIONS

1. Provisions are contained in section VII of the Municipal General Order and the applicable provisions are referenced below:

A. Standard Provisions. (section VII.A of the Municipal General Order)
Applicable to all Dischargers.

B. Monitoring and Reporting Program (MRP) Requirements. (section VII.B of the Municipal General Order)
The MRP applicable to this Facility is contained in Appendix D of this NOA.

C. Special Provisions.
Special Provisions are contained in section VII.C of the Municipal General Order. Only the following Special Provision sections from the Municipal General Order specified in Table 3 apply to this Facility:

Table 3: Summary of Applicable Special Provisions

Special Provision	Section Reference
1. Reopener Provisions	a. Conditions Necessitating a Major Permit Modification b. Mercury c. Whole Effluent Toxicity d. Water Effect Ratios (WERs) and Metal Translators
2. Special Studies, Technical Reports and Additional Monitoring Requirements	a.iii-iv. Toxicity Reduction Evaluation Requirements
3. Best Management Practices and Pollution Prevention	a. Pollution Prevention Plan (PPP) for Mercury c. Salinity Evaluation and Minimization Plan
4. Construction, Operation and Maintenance Specifications	a.ii. Filtration System Operating Specifications b.i.(b). UV Disinfection System – Dose b.ii.(a). UV Disinfection System – Transmittance **(Table Note)** b.ii.(b). UV Disinfection System – Transmittance **(Table Note)** b.iii-vi. UV Disinfection System – General
5. Special Provisions for Municipal Facilities	a. Pretreatment Requirements b. Sludge/Biosolids Treatment or Discharge Specifications c. Collection System d. Anaerobically Digested Material
6. Other Special Provisions	a. Title 22, or Equivalent, Disinfection Requirements

Table 3 Notes:

1. **UV Disinfection System – Transmittance.** The Discharger prepared a UV System Capacity Evaluation (March 2020). This report demonstrates the Facility can provide the required UV dose of 80 millijoules per square centimeter when the UV transmittance is equal to or greater than 55 percent and meet the required pathogen reduction in the effluent. Operating the UV system at a 55 percent transmittance is allowed contingent on approval by the State Water Resources Control Board Division of Drinking Water.

3. Pretreatment Requirements

a. The Discharger shall be responsible and liable for the performance of all Control Authority pretreatment requirements contained in 40 C.F.R. Part 403, including any subsequent regulatory revisions to 40 C.F.R. Part 403. For violations of pretreatment requirements, the Discharger shall be subject to enforcement actions, penalties, fines, and other remedies by the United States Environmental Protection Agency (U.S. EPA) or other appropriate parties, as provided in the Clean Water Act (CWA). U.S. EPA may initiate enforcement action against a nondomestic user for noncompliance with applicable standards and requirements as provided in the CWA.

b. The Discharger shall enforce the requirements promulgated under sections 307(b), 307(c), 307(d), and 402(b) of the CWA with timely, appropriate and effective enforcement actions. The Discharger shall cause all nondomestic users subject to federal categorical standards to achieve compliance no later than the date specified in those requirements or, in the case of a new nondomestic user, upon commencement of the discharge.

c. The Discharger shall perform the pretreatment functions as required in 40 C.F.R. Part 403 including, but not limited to:

(i) Implement the necessary legal authorities as provided in 40 C.F.R. 403.8(f)(1);

(ii) Enforce the pretreatment requirements under 40 C.F.R. 403.5 and 403.6;

(iii) Implement the programmatic functions as provided in 40 C.F.R. 403.8(f)(2); and

(iv) Provide the requisite funding and personnel to implement the pretreatment program as provided in 40 C.F.R. 403.8(f)(3).

d. Pretreatment monitoring and reporting requirements are contained in sections X.D.5 and X.D.7, Table D-9, of Appendix D.

VIII. COMPLIANCE DETERMINATION

The following compliance determinations, as contained and more fully described in the Municipal General Order, are applicable to this discharge (Municipal General Order section given in brackets, if applicable):

- BOD_5 and TSS Effluent Limitations (VIII.A);
- Total Mercury Mass Loading Effluent Limitations (VIII.C);
- Average Dry Weather Flow Effluent Prohibition (VIII.D);
- Total Coliform Organisms Effluent Limitations (VIII.E);
- Dissolved Oxygen Receiving Water Limitation (VIII.I);
- Chronic Whole Effluent Toxicity Effluent Trigger (VIII.J);
- Chlorpyrifos and Diazinon Effluent Limitations (VIII.K);
- Period Average, Calendar Month Average, and Annual Average (VIII.N);
- Turbidity Receiving Water Limitation (VIII.O); and
- Reporting Requirements **(NOA, Appendix D, section X).**

IX. ANTI-BACKSLIDING REQUIREMENTS

Anti-backsliding requirements are specified in the Municipal General Order, section V.D.3, Attachment F (Fact Sheet). Sections 402(o) and 303(d)(4) of the Clean Water

Act (CWA) and federal regulations at 40 Code of Federal Regulations (C.F.R.) section 122.44(l) restrict backsliding in NPDES permits. These anti-backsliding provisions require that effluent limitations in a reissued permit must be as stringent as those in the previous permit, with some exceptions in which limitations may be relaxed.

The effluent limitations in this NOA are at least as stringent as the effluent limitations in the Facility's previous Order R5-2017-0064, with the exception of effluent limitations for ammonia and mass-based limitations and maximum daily effluent limitations for BOD_5, TSS, and ammonia. This relaxation and removal of effluent limitations is consistent with the anti-backsliding requirements of the CWA and federal regulations. A more detailed anti-backsliding analysis is provided in Appendix C to this NOA in section II.A Satisfaction of Anti-Backsliding Requirements, the relaxation of effluent limitations meets the exceptions proved in the federal anti-backsliding regulations.

X. ANTIDEGRADATION REQUIREMENTS

Antidegradation requirements are specified in the Municipal General Order, section V.D.4, Attachment F (Fact Sheet). This NOA does not allow an increase in flow or mass of pollutants to the receiving water and the relaxation of effluent limitations for ammonia (total as nitrogen) and mass-based limitations and maximum daily effluent limitations for BOD_5, TSS, and ammonia are consistent with the antidegradation provisions of 40 C.F.R. 131.12 and State Water Board Resolution 68-16.

A more detailed discussion of antidegradation is provided in Appendix C to this NOA, section II.B Antidegradation Policies.

XI. RATIONALE FOR LIMITATIONS AND MONITORING REQUIREMENTS

Additional rationale for limitations and monitoring requirements is included in Attachment F, section V (Rationale for Effluent Limitations and Discharge Specifications), of the Municipal General Order and Appendix C of this NOA.

XII. ENFORCEMENT

Failure to comply with the applicable requirements of the Municipal General Order, as specified in this NOA, may result in enforcement actions, which could include civil liability (penalties). Effluent limitation violations may be subject to a Mandatory Minimum Penalty (MMP) of $3,000 per violation. In addition, late monitoring reports may be subject to MMPs and/or discretionary penalties of up to $1,000 per day late. If discharges do not occur during any report monitoring period, the Discharger must still submit the monitoring report indicating that no discharge occurred to avoid being subject to enforcement actions.

XIII. COMMUNICATION

Until this NOA becomes effective on XX August 2022, you will need to comply with the effluent limitations and requirements contained in your existing permit, Order R5-2017-0064. For your June 2022 and July 2022 monthly self-monitoring reports, you will need to demonstrate compliance with existing Order R5-2017-0064 through 31 July 2022. For your August 2022 self-monitoring report, you will need to demonstrate compliance with this NOA beginning 1 August 2022.

The central Valley Water Board is implementing a Paperless Office system to reduce

our paper use, increase efficiency, and provide a more effective way for our staff, the public, and interested parties to view documents in electronic form. Therefore, the Discharger is required to submit all self-monitoring, technical, and progress reports required by this NOA via California Integrated Water Quality System (CIWQS) submittal. In general, if any monitoring data for a monitoring location can be submitted using a computable document format (CDF) file upload, then it should be submitted as a CDF file upload, such as characterization monitoring data. However, certain parameters that cannot be uploaded to the CIWQS data tables, such as Annual Operations Reports, should be uploaded as a Portable Document Format (PDF), Microsoft Word, or Microsoft Excel file attachment. Also, please upload or enter a cover letter summarizing the content of the report to the submittal tab of the CIWQS module for each submittal.

All other documents not required to be submitted via CIWQS shall be converted to a searchable PDF and submitted by email to centralvalleysacramento@waterboards.ca.gov. Please include the following information in the body of the email:

- Attention: NPDES Compliance and Enforcement Section
- Discharger: City of Modesto
- Facility: City of Modesto Water Quality Control Facility
- County: Stanislaus County
- CIWQS Place ID: 241146

Documents that are 50 megabytes or larger must be transferred to a DVD or flash drive, and mailed to our office, attention “ECM Mailroom-NPDES”.

Any person aggrieved by this action of the Central Valley Water Board may petition the State Water Board to review the action in accordance with California Water Code section 13320 and California Code of Regulations, title 23, sections 2050 and following. The State Water Board must receive the petition by 5:00 p.m., 30 days after the date this NOA is issued, except that if the thirtieth day following the date this NOA is issued falls on a Saturday, Sunday, or state holiday, the petition must be received by the State Water Board by 5:00 p.m. on the next business day. Links to the laws and regulations applicable to filing petitions (http://www.waterboards.ca.gov/public_notices/petitions/water_quality) may be found on the Internet or will be provided upon request.

Now that your NOA has been issued, the Central Valley Water Board’s Compliance and Enforcement Section will take over management of your case. Mohammad Farhad of the Compliance and Enforcement section is your point of contact for any questions regarding this NOA. If you find it necessary to make a change to your permitted operations, you will be directed to the appropriate Permitting staff. You may contact Mohammad Farhad by phone at 916-464-1181 or email at Mohammad.Farhad@waterboards.ca.gov.

Patrick Pulupa
Executive Officer

Appendices:
Appendix A – Location Map
Appendix B – Flow Schematics
Appendix C – Supplemental Fact Sheet
Appendix D – Monitoring and Reporting Program
Appendix E – Determination of WQBELs

Enclosures:
Municipal General Order R5-2017-0085-02 (Discharger Only)

cc:
Elizabeth Sablad, U.S. EPA, Region IX, San Francisco (email only)
Peter Kozelka, U.S. EPA, Region IX, San Francisco (email only)
Prasad Gullapalli, U.S. EPA, Region IX, San Francisco (email only)
Afrooz Farsimadan, California State Water Resources Control Board (email only)
Renan Jauregui, California State Water Resources Control Board (email only)
Jarma Bennett, California State Water Resources Control Board, (email only)
ICIS NPDES (Sarah Torres), PG Environmental (email only)

APPENDIX A – LOCATION MAP

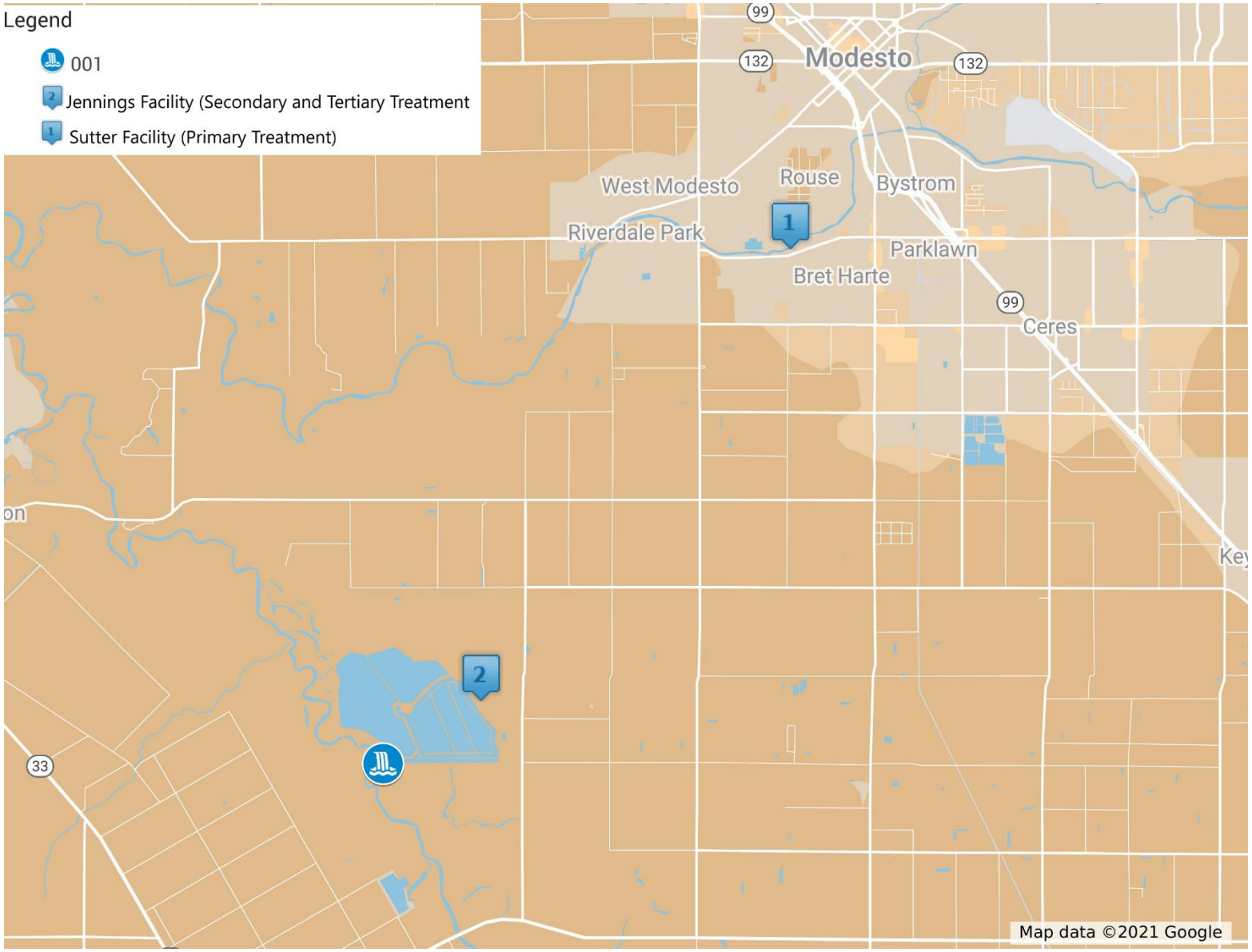

APPENDIX B – FLOW SCHEMATICS

Figure B-1: Sutter Plant Flow Schematic (Preliminary and Primary Treatment)

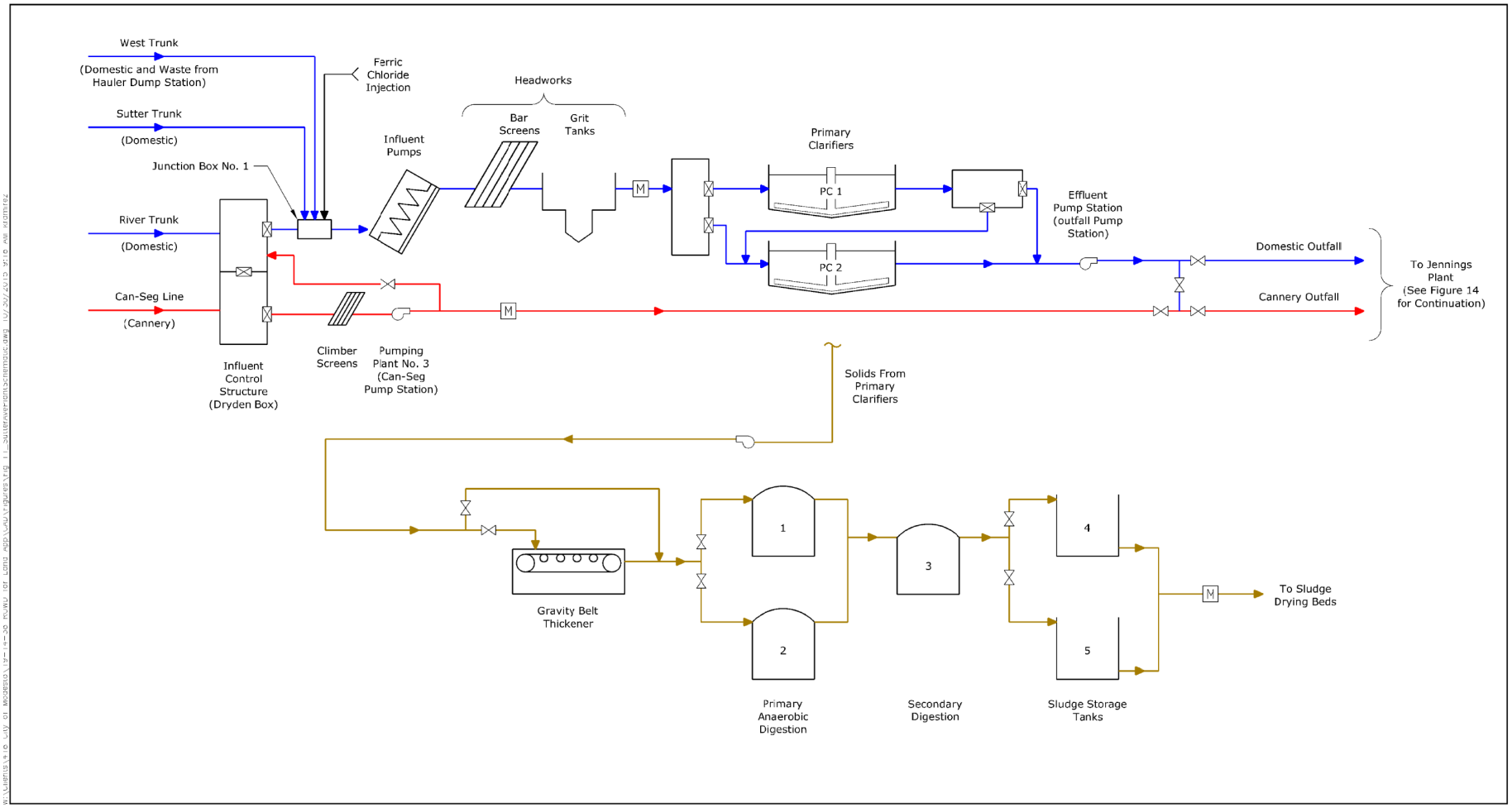

LEGEND
- Existing Domestic Wastewater Conveyances
- Existing Cannery Process Water Conveyances
- Solids Routing
- Valve
- Pump
- Gate
- Flow Meter

Figure 11
Sutter Plant Flow Schematic
City of Modesto WQCF
Report of Waste Discharge and Antidegradation Analysis

Figure B-2: Jennings Plant Flow Schematic

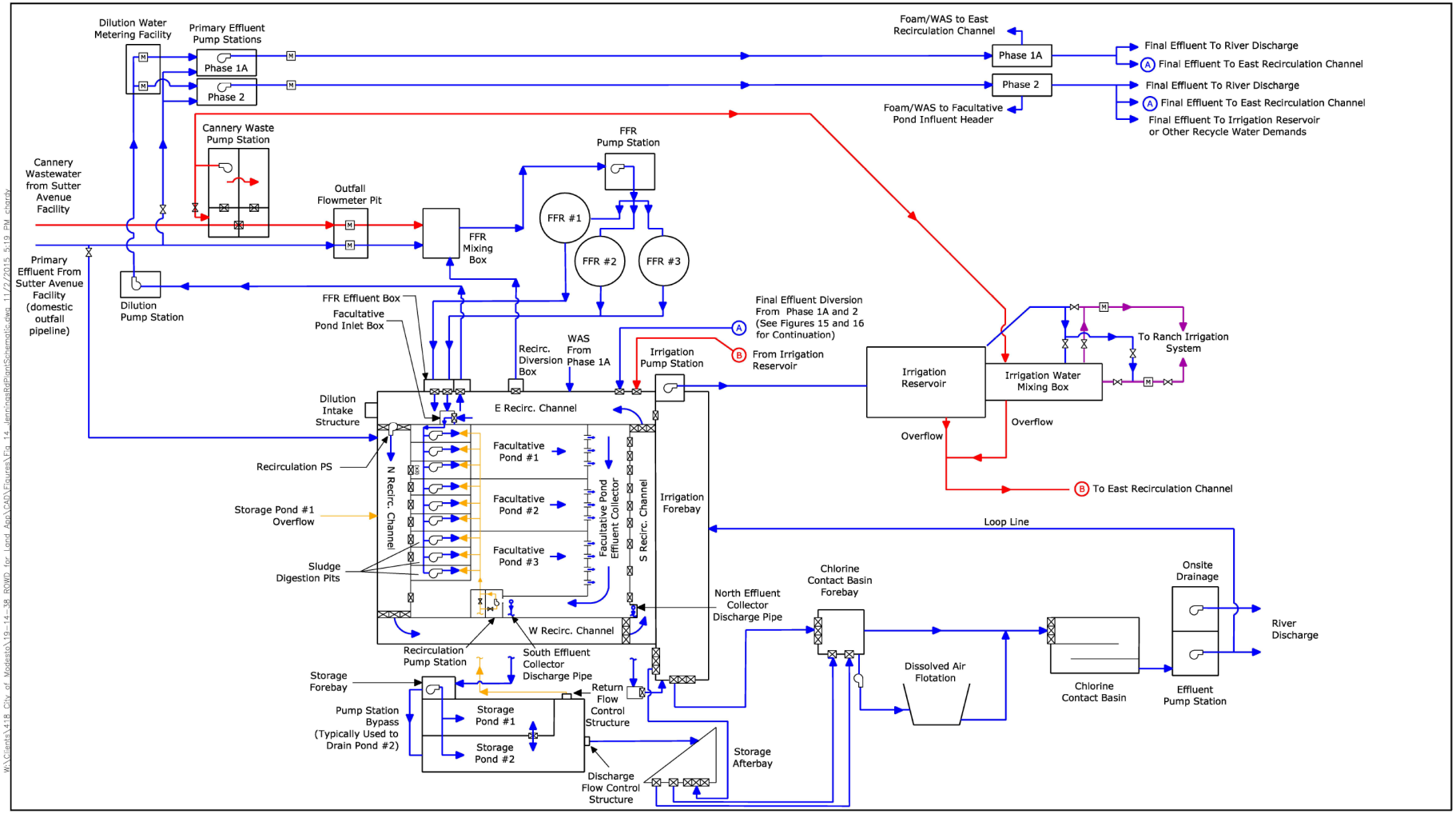

LEGEND

- Existing Domestic Wastewater Conveyances
- Existing Cannery Process Water Conveyances
- Existing Domestic Recirculation
- Existing Domestic Wastewater or Mixed Domestic and Cannery Process Water Conveyances
- Valve
- Pump
- Gate
- Flow Meter
- Weir

Note:
See Figure 15 for Flow Schematic of Phase 1A Process and Figure 16 for Flow Schematic of Phase 2 Process.

City of Modesto UTILITIES DEPARTMENT

WEST YOST ASSOCIATES

Figure 14

Jennings Plant Flow Schematic

City of Modesto WQCF
Report of Waste Discharge
and Antidegradation Analysis

Figure B-3: Jennings Plant Phase 1A Biological Nutrient Reactor Flow Schematic

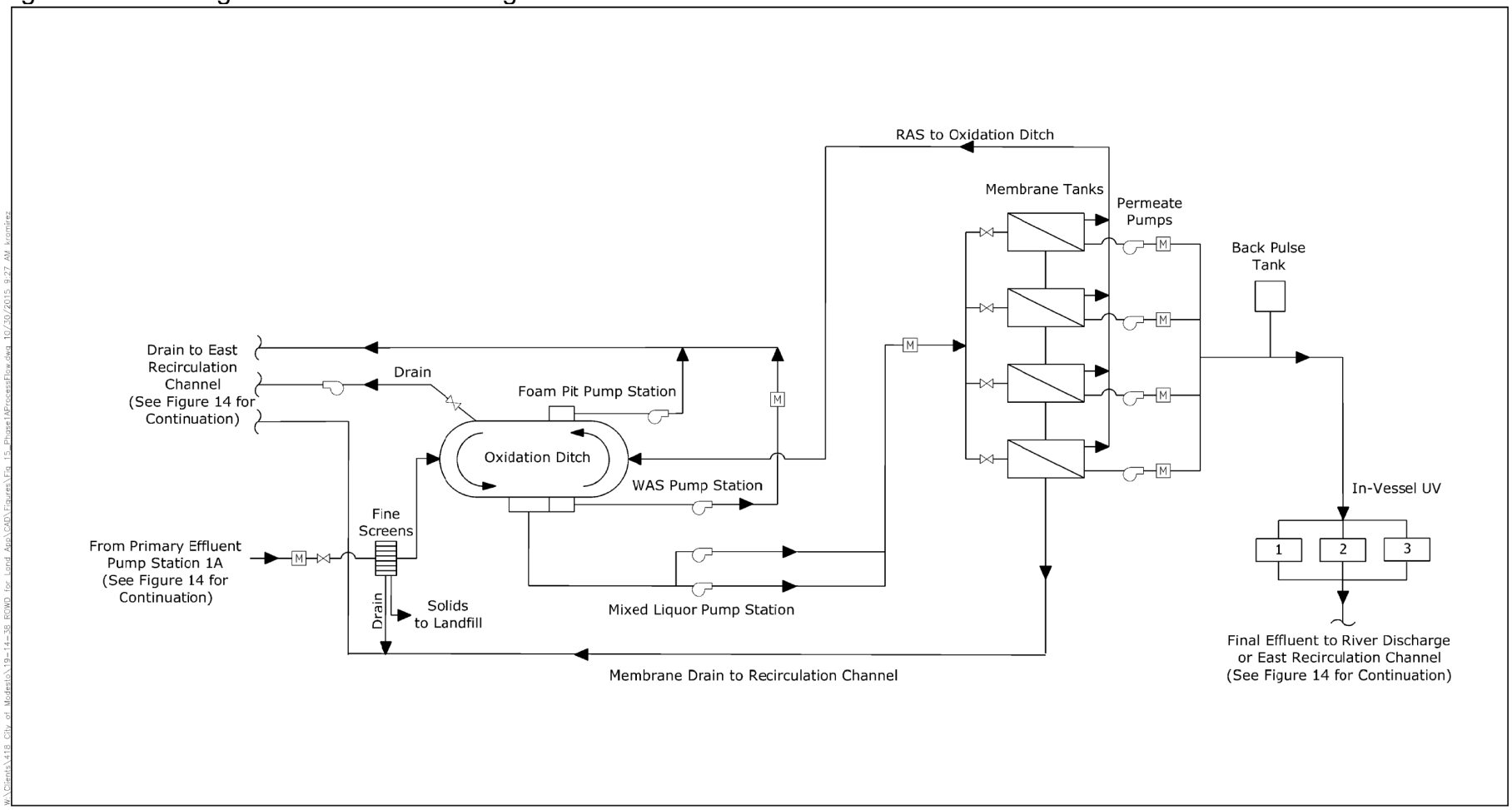

LEGEND
- Wastewater Conveyances
- Valve
- Pump
- Gate
- Flow Meter
- Weir

City of Modesto UTILITIES DEPARTMENT

WEST YOST ASSOCIATES

Figure 15

Jennings Plant Phase BNR/1A Tertiary Treatment Effluent System Flow Schematic

City of Modesto WQCF
Report of Waste Discharge
and Antidegradation Analysis

Figure B-4: Jennings Plant Phase 2 Biological Nutrient Reactor Flow Schematic

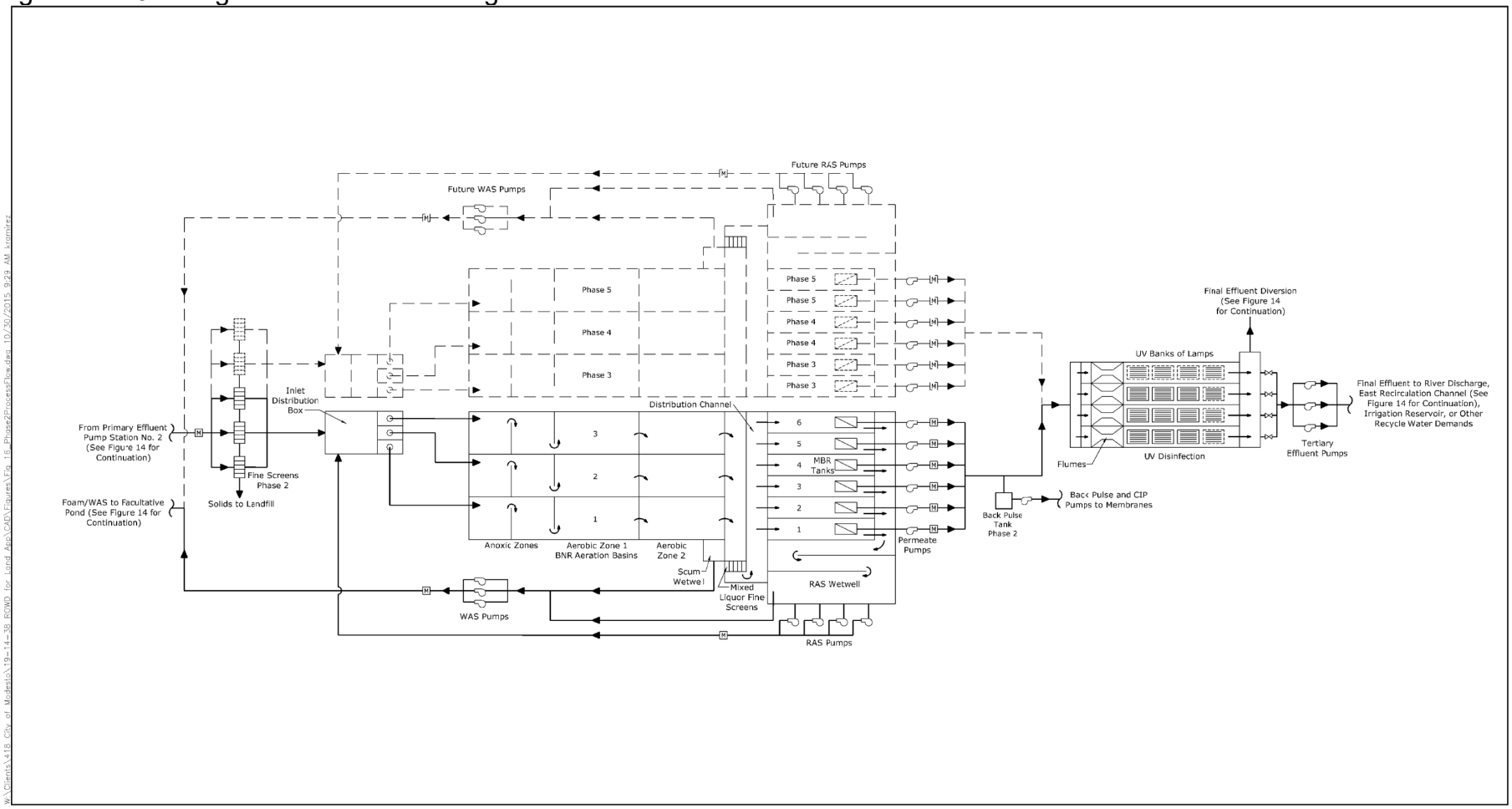

LEGEND
- Valve
- Pump
- Flow Meter

Figure 16

Jennings Plant Phase 2 BNR Tertiary Treatment Effluent System Flow Schematic

City of Modesto WQCF
Report of Waste Discharge
and Antidegradation Analysis

APPENDIX C – SUPPLEMENTAL FACT SHEET

I. APPLICABLE PLANS, POLICIES, AND REGULATIONS

The requirements contained in this NOA are based on the requirements and authorities described in Attachment F, Section III of the Municipal General Order. In addition to the Fact Sheet contained in the Municipal General Order, the Central Valley Water Board incorporates this Supplemental Fact Sheet as findings of the Central Valley Water Board supporting the issuance of this NOA.

II. FINAL EFFLUENT LIMITATION CONSIDERATIONS

A. Satisfaction of Anti-Backsliding Requirements

The Clean Water Act (CWA) specifies that a revised permit may not include effluent limitations that are less stringent than the previous permit unless a less stringent limitation is justified based on exceptions to the anti-backsliding provisions contained in CWA sections 402(o) or 303(d)(4), or, where applicable 40 C.F.R. section 122.44(l).

The effluent limitations in this NOA are at least as stringent as the effluent limitations in the Facility's previous Order R5-2017-0064, with the exception of effluent limitations for ammonia and mass-based limitations and maximum daily effluent limitations for BOD_5, TSS, and ammonia. This relaxation and removal of effluent limitations is consistent with the anti-backsliding requirements of the CWA and federal regulations.

1. **CWA section 402(o)(1) and 303(d)(4).** CWA section 402(o)(1) prohibits the establishment of less stringent water quality-based effluent limits (WQBELs) "except in compliance with Section 303(d)(4)." CWA section 303(d)(4) has two parts: paragraph (A) which applies to nonattainment waters and paragraph (B) which applies to attainment waters.
   a. For waters where standards are not attained, CWA section 303(d)(4)(A) specifies that any effluent limit based on a TMDL or other waste load allocation (WLA) may be revised only if the cumulative effect of all such revised effluent limits based on such TMDLs or WLAs will assure the attainment of such water quality standards.
   b. For attainment waters, CWA section 303(d)(4)(B) specifies that a limitation based on a water quality standard may be relaxed where the action is consistent with the antidegradation policy.

   The San Joaquin River is considered an attainment water for ammonia, BOD_5, and TSS because it is not listed as impaired on the 303(d) list for these constituents. The exceptions in Section 303(d)(4) address both waters in attainment with water quality standards and those not in attainment, i.e. waters on the section 303(d) impaired waters list (State Water Resources Control Board Order WQ-2008-0006, Berry Petroleum Company, Poso Creek/McVan Facility). As discussed below, relaxation of the ammonia effluent limitations and removal of the mass-based limits for BOD_5, TSS, and ammonia complies with federal and state antidegradation requirements. Thus, removal and relaxation of these effluent limitations meets the exception in CWA section 303(d)(4)(B).

2. **CWA section 402(o)(2).** CWA section 402(o)(2) provides several exceptions to the anti-backsliding regulations. CWA 402(o)(2)(B)(i) allows a renewed, reissued, or modified permit to contain a less stringent effluent limitation for a pollutant if

information is available which was not available at the time of permit issuance (other than revised regulations, guidance, or test methods) and which would have justified the application of a less stringent effluent limitation at the time of permit issuance.

Updated information that was not available at the time Order R5-2017-0064 was issued indicates that less stringent effluent limitations for ammonia satisfy requirements in CWA section 402(o)(2). The updated information that supports the relaxation of effluent limitations for ammonia includes the following:

a. **Ammonia**. The ammonia effluent limitations have been revised on updated pH and temperature data used for the calculation of the ammonia water quality criteria.

Thus, relaxation of effluent limitations for ammonia from this NOA is in accordance with CWA section 402(o)(2)(B)(i), which allows for the removal or relaxation of effluent limitations based on information that was not available at the time previous Order R5-2017-0064 was issued.

3. **Flow.** Order R5-2017-0064 included an average dry weather discharge flow effluent limitation at Discharge Point 001 based on the Facility design flow. Compliance with the flow limit was calculated using the average daily flow over three consecutive dry weather months. Flow is not a pollutant and therefore has been changed from an effluent limit to a discharge prohibition in this NOA, which is an equivalent level of regulation. This NOA is not less stringent because compliance with flow as a discharge prohibition will be calculated the same way as the previous Order. Flow as a discharge prohibition adequately regulates the Facility, does not allow for an increase in the discharge of pollutants, and does not constitute backsliding.

B. Antidegradation Policies

This NOA does not allow for an increase in flow or mass of pollutants to the receiving water. Therefore, a complete antidegradation analysis is not necessary. This NOA requires compliance with applicable federal technology-based standards and with WQBELs where the discharge could have the reasonable potential to cause or contribute to an exceedance of water quality standards. The permitted discharge is consistent with the antidegradation provisions of 40 C.F.R. section 131.12 and the State Anti-Degradation Policy. Compliance with these requirements will result in the use of best practicable treatment or control of the discharge. The impact on existing water quality will be insignificant. Section IV.D.4.a of the Fact Sheet in Order R5-2017-0064 describes and summarizes the complete antidegradation analysis approved by the Central Valley Water Board, approving a flow increase to 19.1 MGD.

This NOA relaxes effluent limitations for ammonia. Based on Facility performance the relaxation of these effluent limitations is not expected to result in an increase in pollutants concentration or loading, a decrease in the level of treatment or control, or a reduction of water quality. Implementation of this NOA will result in the best practicable treatment or control of the discharge necessary to assure that a pollution or nuisance will not occur and the highest water quality consistent with the maximum benefit to the people of the State will be maintained. Thus, the relaxation of effluent limitations for ammonia is consistent with the antidegradation provisions of 40 C.F.R. section 131.12 and State Water Resources Control Board (State Water Board) Resolution No. 68-16.

This NOA also removes maximum daily effluent limitations and mass-based effluent limitations for BOD_5, TSS, and mass-based effluent limitations for ammonia based on 40 C.F.R. Part 122.45 (d) and (f). These changes in effluent limitations will not result in a decrease in the level of treatment or control, or a reduction in water quality.

Furthermore, concentration-based average monthly effluent limitations (AMELs) and average weekly effluent limitations (AWELs) are included for BOD_5, TSS, and ammonia, as well as a prohibition (section V.D of this NOA) on discharging flows greater than the average dry weather flow that limits the amount of flow that can be discharged to the receiving water during dry weather months. The combination of flow and concentration-based effluent limits in this NOA are equivalent to mass-based effluent limitations, which were redundant limits contained in previous individual Orders by multiplying the concentration based effluent limits and permitted average dry weather flow by a conversion factor to determine the mass-based effluent limitations. These effluent limitation changes do not result in an allowed increase in pollutants or any additional degradation of the receiving water and are therefore consistent with the antidegradation provisions of 40 C.F.R. section 131.12 and the State Antidegradation Policy.

C. Salinity (Electrical Conductivity or EC)

The Basin Plan Amendment for the Control of Salt and Boron Discharges into the Lower San Joaquin River (LSJR Salt and Boron Control Program) established waste load allocations for NPDES permitted discharges to not exceed the Bay-Delta Plan South Delta electrical conductivity objectives for the San Joaquin River at Airport Way in Vernalis.

On 1 June 2011, the Superior Court for Sacramento County entered a judgment and peremptory writ of mandate in the matter of *City of Tracy v. State Water Resources Control Board* (Case No; 34-2009-8000-392-CU-WM-GDS), ruling that the South Delta salinity objectives shall not apply to the City of Tracy ***and other municipal dischargers*** pending reconsideration of the South Delta salinity objectives and adoption of a proper program of implementation that includes municipal dischargers. Therefore, at the time this NOA was issued the South Delta salinity objectives (including the objectives for the San Joaquin River at Airport Way in Vernalis) are not applicable to the Discharger. The State Water Board adopted revised salinity water quality objectives for the South Delta and program of implementation for municipal dischargers. However, the updated water quality objectives have not been approved by U.S. EPA so are not in effect. Therefore, in accordance with the peremptory writ of mandate in the matter of *City of Tracy v. State Water Resources Control Board* (Case No; 34-2009-8000-392-CU-WM-GDS), the Central Valley Water Board is not able to apply the Bay-Delta Plan salinity objectives to the discharge of the Facility, and as a result, is unable to establish final water quality-based effluent limitations.

Based on effluent electrical conductivity data collected from March 2018 through February 2021, the maximum calendar annual average EC of the effluent was 930 µmhos/cm. The Municipal General Order includes a screening level for electrical conductivity of 1,600 µmhos/cm based on the Secondary Maximum Contaminant Level (MCL) to protect the municipal and domestic supply beneficial use.

The Facility discharge does not exceed the EC screening level; therefore, the discharge does not have reasonable potential to cause or contribute to an in-stream excursion of water quality objectives for salinity. However, in accordance with the Basin Plan's Salinity Control Program the Discharger submitted a Notice of Intent on 7 July 2021 indicating participation in the Alternative Salinity Permitting Approach. Accordingly, the Municipal General Order includes a calendar annual average performance-based effluent limitation for electrical conductivity of 1,250 µmhos/cm that is applicable to this Facility.

D. Constituents with Total Maximum Daily Load (TMDL).

40 C.F.R. section 122.44(d)(1)(vii) provides: "When developing water quality-based effluent limits under [section 122.44(d)(1)], the permitting authority shall ensure that: (A) The level of water quality to be achieved by limits on point sources established under this paragraph is derived from, and complies with all applicable water quality standards; and (B) Effluent limits developed to protect a narrative water quality criterion, a numeric water quality criterion, or both, are consistent with the assumptions and requirements of any available wasteload allocation for the discharge prepared by the State and approved by EPA pursuant to [Total Maximum Daily Loads regulations]." U.S. EPA construes 40 C.F.R. section 122.44(d)(1)(vii)(B) to mean that "when WLAs are available, they must be used to translate water quality standards into NPDES permit limits." 54 Fed. Reg. 23868, 23879 (June 2, 1989).

The San Joaquin River is subject to the Salt and Boron Control Program and TMDLs for diazinon and chlorpyrifos and WLAs under those TMDLs are available. The Central Valley Water Board developed WQBELs for these pollutants pursuant to 40 C.F.R. section 122.44(d)(1)(vii), which does not require or contemplate an RPA.

III. RATIONALE FOR RECEIVING WATER LIMITATIONS

A. Surface Water

CWA section 303(a-c), requires states to adopt water quality standards, including criteria where they are necessary to protect beneficial uses. The Central Valley Water Board adopted water quality criteria as water quality objectives in the Basin Plan. The Basin Plan states that "[t]he numerical and narrative water quality objectives define the least stringent standards that the Regional Water Board will apply to regional waters in order to protect the beneficial uses.". The Basin Plan includes numeric and narrative water quality objectives for various beneficial uses and water bodies. This NOA contains receiving surface water limitations based on the Basin Plan numerical and narrative water quality objectives for biostimulatory substances, color, chemical constituents, dissolved oxygen, floating material, oil and grease, pH, pesticides, radioactivity, suspended sediment, settleable substances, suspended material, tastes and odors, temperature, toxicity, and turbidity.

B. Groundwater – Not Applicable

IV. RATIONALE FOR MONITORING REQUIREMENTS

CWA section 308 and 40 C.F.R. sections 122.41(h), (j)-(l), 122.44(i), and 122.48 require that all NPDES permits specify monitoring and reporting requirements. Water Code sections 13267 and 13383 also authorize the Central Valley Water Board to establish monitoring, inspection, entry, reporting, and recordkeeping requirements. The Monitoring

and Reporting Program, Attachment E of the Municipal General Order establishes monitoring, reporting, and recordkeeping requirements that implement federal and state requirements. The following provides the rationale for the monitoring requirements contained in Monitoring and Reporting Program, Appendix D, of this NOA.

A. Influent Monitoring

1. Influent monitoring is required to collect data on the characteristics of the wastewater and to assess compliance with effluent limitations (e.g., BOD_5 and TSS reduction requirements). The monitoring frequencies for flow (continuous), BOD_5 (once per day), TSS (once per day), pH (once per day), and electrical conductivity at 25° Celsius (once per week) have been retained from Order R5-2017-0064.

B. Effluent Monitoring

1. Pursuant to the requirements of 40 C.F.R. section 122.44(i)(2) effluent monitoring is required for all constituents with effluent limitations. Effluent monitoring is necessary to assess compliance with effluent limitations, assess the effectiveness of the treatment process, and to assess the impacts of the discharge on the receiving stream and groundwater. The following effluent monitoring frequencies have been revised from Order R5-2017-0064, all other effluent sampling frequencies from R5-2017-0064 are carried forward to this NOA:

Table C-1. Rationale for Changes to Effluent Monitoring Frequencies from Order R5-2017-0064

Parameter	Unit	Prior Sample Frequency	Revised Sample Frequency	Rationale for Sample Frequency Revision
Biochemical Oxygen Demand (5-day @ 20°Celcius) (BOD_5)	mg/L	1/Day	3/Week	Frequency reduction is adequate to determine compliance with the effluent limitations
BOD_5	lbs/day	1/Day	Discontinue	Mass-based effluent limit removed
Total Suspended Solids (TSS)	mg/L	1/Day	3/Week	The reduction in minimum sampling frequency is adequate to determine compliance with the effluent limitations
TSS	lbs/day	1/Day	Discontinue	Mass-based effluent limit removed
pH	Standard Units	Continuous	1/Day	The reduction in minimum sampling frequency is adequate to determine compliance with the effluent limitations
Ammonia Nitrogen, Total (as N)	lbs/day	1/Week	Discontinue	Mass-based effluent limit removed

Parameter	Unit	Prior Sample Frequency	Revised Sample Frequency	Rationale for Sample Frequency Revision
Nitrate plus Nitrite, as Nitrogen	mg/L	1/Week	2/Month	The reduction in minimum sampling frequency is adequate to determine compliance with the effluent limitations
Dissolved Organic Carbon	mg/L	Not required	1/Quarter	Monitoring will provide data to calculate site-specific freshwater aluminum criteria for the next permit renewal.
Boron	mg/L	1/Month	6/Year in 2023	Electrical conductivity will be monitored in place of boron.
Chloride	mg/L	1/Month	6/Year in 2023	Electrical conductivity will be monitored in place of chloride
Total Dissolved Solids (TDS)	mg/L	1/Month	Discontinue	Electrical conductivity will be monitored in place of TDS

C. Whole Effluent Toxicity Testing Requirements

1. **Acute Toxicity**. Effluent monitoring frequency for acute toxicity 96-hour bioassay (once per quarter) has been retained from previous Order R5-2017-0064 to demonstrate compliance with the effluent limitation for acute toxicity.
2. **Chronic Toxicity.** Order R5-2017-0064 required quarterly chronic bioassay testing. This NOA retains the quarterly chronic whole effluent toxicity testing when discharging to the San Joaquin River in order to demonstrate compliance with the Basin Plan's narrative toxicity objective.

D. Receiving Water Monitoring

1. San Joaquin River

a. Receiving water monitoring is necessary to assess compliance with receiving water limitations and to assess the impacts of the discharge to the San Joaquin River. The following receiving water monitoring frequencies have been revised from Order R5-2017-0064, all other receiving water sampling frequencies from R5-2017-0064 are carried forward to this NOA:

Table C-2. Rationale for Changes to Receiving Water Monitoring Frequencies from Order R5-2017-0064

Parameter	Unit	Prior Sample Frequency	Revised Sample Frequency	Rationale for Sample Frequency Revision
Flow	MGD	Continuous	Discontinue	Not needed for permitting or compliance purposes
TDS	mg/L	1/Month	Discontinue	Electrical conductivity will be used to characterize the salinity in the receiving water for salinity in place of TDS
Hardness (as $CaCO_3$)	mg/L	1/Month	1/Quarter	The reduction in minimum sampling frequency is adequate to characterize the receiving water for this parameter

2. **Groundwater – Not Applicable**

E. Biosolids Monitoring – Not Applicable

Biosolids monitoring requirements are specified in separate WDRs (Order 94-030).

F. Water Supply Monitoring – Not Applicable

G. Filtration System Monitoring

1. Filtration system monitoring for turbidity is required for Dischargers of tertiary treated wastewater that meet the eligibility criteria in section I.B.4 of the Municipal General Order to determine compliance with the filtration system operating specifications in section VII.C.4.a of the Municipal General Order.
2. The monitoring frequency for turbidity (continuous) is retained from previous Order R5-2017-0064 to evaluate compliance the turbidity operating specifications.

H. UV Disinfection System Monitoring

1. The monitoring frequencies from Order R5-2017-0064 for flow, UV transmittance, UV dose, total coliform organisms and the observation requirement for the number of UV banks in operation have been retained to evaluate compliance with UV operating specifications.

I. Pond Monitoring – Not Applicable

J. Discharge Monitoring Report-Quality Assurance (DMR-QA) Study Program

1. Under the authority of section 308 of the CWA (33 U.S.C. section 1318), U.S. EPA requires all dischargers under the NPDES Program to participate in the annual DMR-QA Study Program. The DMR-QA Study evaluates the analytical ability of laboratories that routinely perform or support self-monitoring analyses required by NPDES permits. There are two options to satisfy the requirements of the DMR-QA Study Program: (1) The Discharger can obtain and analyze a DMR-QA sample as part of the DMR-QA Study; or (2) Per the waiver issued by U.S. EPA to the State Water Board, the Discharger can submit the results of the most recent Water

Pollution Performance Evaluation Study from their own laboratories or their contract laboratories. A Water Pollution Performance Evaluation Study is similar to the DMR-QA Study. Thus, it also evaluates a laboratory's ability to analyze wastewater samples to produce quality data that ensure the integrity of the NPDES Program. The Discharger shall submit annually the results of the DMR-QA Study or the results of the most recent Water Pollution Performance Evaluation Study to the State Water Board. The State Water Board's Quality Assurance Program Officer will send the DMR-QA Study results or the results of the most recent Water Pollution Performance Evaluation Study to U.S. EPA's DMR-QA Coordinator and Quality Assurance Manager.

K. Effluent and Receiving Water Characterization Monitoring

1. Order R5-2017-0064 included monthly effluent characterization monitoring for one year when discharging to the San Joaquin River. This NOA reduces the effluent characterization monitoring to every two months (6 sampling events) between 1 January 2023 and 31 December 2023. Monitoring performed by the Discharger for compliance with its Waste Discharge Requirements for the discharge to the Delta Mendota Canal via the North Valley Regional Recycled Water Program Joint Outfall (NPDES Permit number CA0085316, Waste Discharge Requirements Order R5-2022-0034 and any revisions to or reissued Waste Discharge Requirements) may be used to meet these monitoring requirements.
2. Order R5-2017-0064 included monthly upstream receiving water characterization monitoring for one year. This NOA reduces the upstream receiving water characterization monitoring to every two months (6 sampling events) between 1 January 2023 and 31 December 2023.

V. PRETREATMENT PROVISION

A. Pretreatment Requirements

1. On 9 January 1984, the U.S. EPA approved the Discharger's Industrial Pretreatment Program in accordance with 40 C.F.R. Part 403. The Industrial Pretreatment Program requires issuance of waste discharge permits to Significant Industrial Users/Categorical Industrial Users, Non-significant Industrial Users, and food service establishments (to control fats, oils, and grease). The program also regulates Significant Commercial Users and dental offices and implements best management practices. The Discharger's Facility has undergone 1 compliance inspection or audits since August 2017.
2. The federal CWA section 307(b), and federal regulations, 40 C.F.R. part 403, require POTW's to develop an acceptable industrial pretreatment program. A pretreatment program is required to prevent the introduction of pollutants, which will interfere with treatment plant operations or sludge disposal, and prevent pass through of pollutants that exceed water quality objectives, standards or permit limitations. Pretreatment requirements are imposed pursuant to 40 C.F.R. part 403.
3. The Discharger shall implement and enforce its approved pretreatment program in accordance with 40 C.F.R. part 403 and is an enforceable condition of this NOA. If the Discharger fails to perform the pretreatment functions, the Central Valley Water Board, the State Water Board or U.S. EPA may take enforcement actions against the Discharger as authorized by the CWA.

VI. SUMMARY OF REASONABLE POTENTIAL ANALYSIS

Table C-3. SUMMARY OF REASONABLE POTENTIAL ANALYSIS

Parameter	Units	MEC	B	C	CMC	CCC	Water and Org	Org. Only	Basin Plan	MCL	RP
Ammonia (as Nitrogen)	mg/L	2.7	--	10	8.72	1.49	--	--	--	--	Yes
Nitrate Plus Nitrite (as N)	mg/L	7.5	--	10	--	--	--	--	--	10	Yes

Table C-3 Notes:

1. Abbreviations used in Table C-3:

   MEC = Maximum Effluent Concentration
   B = Maximum Receiving Water Concentration
   C = Criterion used for Reasonable Potential Analysis
   CMC = Criterion Maximum Concentration
   CCC = Criterion Continuous Concentration
   Water and Org = Human Health Criterion for Consumption of Water and Organisms
   Org Only = Human Health Criterion for Consumption of Organisms Only
   Basin Plan = Numeric Site-Specific Basin Plan Water Quality Objective
   MCL =Drinking Water Standards Maximum Contaminant Level
   RP= Reasonable Potential

2. **CMC.** For ammonia, the CMC or criterion maximum concentration is based on the U.S. EPA National Recommended Ambient Water Quality Criteria Freshwater Aquatic Life Protection, 1-hour average. For copper and zinc, the CMC is based on the CTR, 1-hour average criterion.
3. **CCC.** For ammonia, the CCC or criterion continuous concentration is based on the U.S. EPA National Recommended Ambient Water Quality Criteria Freshwater Aquatic Life Protection, 30-day average. For copper and zinc, the CCC is based on the CTR, 4-day average criterion.
4. **Ammonia and Nitrate plus Nitrite.** Reasonable potential exists due to the biological processes inherent to the treatment of domestic wastewater (see sections V.C.3.b.ii and V.C.3.b.ix in Attachment F, Fact Sheet, of the Municipal General Order).

APPENDIX D – MONITORING AND REPORTING PROGRAM

I. GENERAL MONITORING PROVISIONS 28
II. MONITORING LOCATIONS 29
III. INFLUENT MONITORING REQUIREMENTS 30
A. Monitoring Location INF-001 30
IV. EFFLUENT MONITORING REQUIREMENTS 31
A. Monitoring Location EFF-001B 31
V. WHOLE EFFLUENT TOXICITY (WET) TESTING REQUIREMENTS 33
A. Acute Toxicity Testing. 33
B. Chronic Toxicity Testing. 34
C. WET Testing Notification Requirements. 36
D. WET Testing Reporting Requirements. 36
VI. LAND DISCHARGE MONITORING REQUIREMENTS – NOT APPLICABLE 37
VII. RECYCLING MONITORING REQUIREMENTS – NOT APPLICABLE 37
VIII. RECEIVING WATER MONITORING REQUIREMENTS 37
A. Monitoring Locations RSW-001 and RSW-002 37
IX. OTHER MONITORING REQUIREMENTS 38
A. Biosolids – Not Applicable 38
B. Ponds – Not Applicable 38
C. Municipal Water Supply – Not Applicable 38
D. Filtration System and Ultraviolet Light (UV) Disinfection System 38
E. Effluent Characterization and Receiving Water Characterization 39
X. REPORTING REQUIREMENTS 50
A. General Monitoring and Reporting Requirements 50
B. Self-Monitoring Reports 50
C. Discharge Monitoring Reports (DMR's) 54
D. Other Reports 54

Tables

Table D-1. Monitoring Station Locations 29
Table D-2. Influent Monitoring 30
Table D-3. Effluent Monitoring 31
Table D-4. Chronic Toxicity Testing Dilution Series 35
Table D-5. Receiving Water Monitoring Requirements 37
Table D-6. Filtration and UV Disinfection System Monitoring Requirements 38
Table D-7. Effluent and Receiving Water Characterization Monitoring 40
Table D-8. Monitoring Periods and Reporting Schedule 51
Table D-9. Technical Reports 58

APPENDIX D – MONITORING AND REPORTING PROGRAM (MRP)

The Municipal General Order contains monitoring and reporting requirements in Attachment E. Some of the monitoring and reporting requirements listed in the Municipal General Order are not applicable to the Facility. The monitoring and reporting requirements applicable to the Facility are contained in this Appendix and are described herein.

The Code of Federal Regulations (40 C.F.R. § 122.48) requires that all NPDES permits specify monitoring and reporting requirements. Water Code sections 13267 and 13383 also authorize the Central Valley Water Board to require technical and monitoring reports. This MRP establishes monitoring and reporting requirements that implement state and federal regulations.

I. GENERAL MONITORING PROVISIONS

A. Samples and measurements taken as required herein shall be representative of the volume and nature of the monitored discharge. All samples shall be taken at the monitoring locations specified below and, unless otherwise specified, before the monitored flow joins or is diluted by any other waste stream, body of water, or substance. Monitoring locations shall not be changed without notification to and the approval of the Central Valley Water Board.

B. Final effluent samples shall be taken downstream of the last addition of wastes to the treatment or discharge works where a representative sample may be obtained prior to mixing with the receiving waters. Samples shall be collected at such a point and in such a manner to ensure a representative sample of the discharge.

C. Chemical, bacteriological, and bioassay analyses of any material required by this NOA shall be conducted by a laboratory accredited for such analyses by the State Water Resources Control Board (State Water Board), Division of Drinking Water (DDW), in accordance with the provision of Water Code section 13176. Laboratories that perform sample analyses must be identified in all monitoring reports submitted to the Central Valley Water Board. Data generated from field measurements such as, pH, dissolved oxygen, electrical conductivity (EC), turbidity, and temperature are exempt pursuant to Water Code Section 13176. A manual containing the steps followed in this program for any field measurements such as, but not limited to, pH, dissolved oxygen, EC, turbidity, and temperature must be kept onsite in the treatment facility laboratory and shall be available for inspection by Central Valley Water Board staff. The Discharger must demonstrate sufficient capability (qualified and trained employees, properly calibrated and maintained field instruments, etc.) to adequately perform these field measurements. The Quality Assurance-Quality Control Program must conform to U.S. EPA guidelines or to procedures approved by the Central Valley Water Board.

D. Appropriate flow measurement devices and methods consistent with accepted scientific practices shall be selected and used to ensure the accuracy and reliability of measurements of the volume of monitored discharges. All monitoring instruments and devices used by the Discharger to fulfill the prescribed

monitoring program shall be properly maintained and calibrated as necessary, at least yearly, to ensure their continued accuracy. All flow measurement devices shall be calibrated at least once per year to ensure continued accuracy of the devices.

E. Monitoring results, including noncompliance, shall be reported at intervals and in a manner specified in this MRP.

F. Laboratory analytical methods shall be sufficiently sensitive in accordance with the Sufficiently Sensitive Methods Rule (SSM Rule) specified under 40 C.F.R. 122.21(e)(3) and 122.44(i)(1)(iv). A U.S. EPA-approved analytical method is sufficiently sensitive for pollutant/parameter where:

- The method minimum level (ML) is at or below the applicable water quality objective for the receiving water, or;
- The method ML is above the applicable water quality objective for the receiving water but the amount of the pollutant/parameter in the discharge is high enough that the method detects and quantifies the level of the pollutant/parameter, or;
- The method ML is above the applicable water quality objective for the receiving water, but the ML is the lowest of the 40 C.F.R. 136 U.S. EPA-approved analytical methods for the pollutant/parameter.

G. The Discharger shall ensure that the results of the Discharge Monitoring Report-Quality Assurance (DMR-QA) Study or the most recent Water Pollution Performance Evaluation Study are submitted annually, via email to QualityAssurance@waterboards.ca.gov to the State Water Resources Control.

H. The Discharger shall file with the Central Valley Water Board technical reports on self-monitoring performed according to the detailed specifications contained in this MRP.

I. The results of all monitoring required by this MRP shall be reported to the Central Valley Water Board and shall be submitted in such a format as to allow direct comparison with the limitations and requirements of the NOA. Unless otherwise specified, discharge flows shall be reported in terms of the monthly average and the daily maximum discharge flows.

II. MONITORING LOCATIONS

The Discharger shall establish the monitoring locations listed in Table D-1 to demonstrate compliance with the effluent limitations, discharge specifications, and other requirements in the NOA.

Table D-1. Monitoring Station Locations

Discharge Point Name	Monitoring Location Name	Monitoring Location Description
--	INF-001	Location where a representative sample of the influent into the Facility can be collected prior to any plant return flows or treatment processes.

Discharge Point Name	Monitoring Location Name	Monitoring Location Description
001	EFF-001B	Location where a representative sample of effluent from the Facility can be collected after all treatment processes and prior to discharge to the San Joaquin River.
--	RSW-001	San Joaquin River upstream at West Main Bridge.
--	RSW-002	San Joaquin River approximately 500 feet downstream of Discharge Point 001.
--	UVS-001	Monitoring of the filter effluent from the Phase 1A treatment train to be measured immediately downstream of the membranes prior to the UV disinfection system.
--	UVS-002	Monitoring of the filter effluent from the Phase 2 treatment train to be measured immediately downstream of the filters and prior to the UV disinfection system.
--	UVS-001A	Location where a representative sample of wastewater from the Phase 1A treatment train can be collected immediately downstream of the UV disinfection system.
--	UVS-002A	Location where a representative sample of wastewater from the Phase 2 treatment train can be collected immediately downstream of the UV disinfection system.

III. INFLUENT MONITORING REQUIREMENTS

A. Monitoring Location INF-001

1. The Discharger shall monitor influent to the Facility at Monitoring Location INF-001 when discharging to the San Joaquin River as specified in Table D-2 and the testing requirements described in section III.A.2 below:

Table D-2. Influent Monitoring

Parameter	Units	Sample Type	Sampling Frequency
Flow	MGD	Meter	Continuous
Biochemical Oxygen Demand (5-day @ 20°Celcius)	mg/L	24-hour Composite	1/Week
Total Suspended Solids	mg/L	24-hour Composite	1/Week
pH	Standard Units	Grab	1/Week
Electrical Conductivity at 25°Celsius	µmhos/cm	Grab	1/Week

2. Table D-2 Testing Requirements. The Discharger shall comply with the following testing requirements when monitoring for the parameters described in Table D-2:

a. **Applicable to all parameters**. Parameters shall be analyzed using the analytical methods described in 40 C.F.R. part 136; or by methods approved by the Central Valley Water Board or the State Water Board. In addition, if requested by the Discharger, the sample type may be modified by the Executive Officer to another 40 C.F.R. part 136 allowed sample type.
b. **Composite Sample.** All composite samples shall be collected from a 24-hour flow proportional composite.
c. **Grab Sample.** All grab samples shall not be collected at the same time each day to get a complete representation of variations in the influent.
d. **Handheld Field Meter.** A handheld field meter may be used for **electrical conductivity and pH**, provided the meter utilizes a U.S. EPA-approved algorithm/method and is calibrated and maintained in accordance with the manufacturer's instructions. A calibration and maintenance log for each meter used for monitoring required by this Monitoring and Reporting Program shall be maintained at the Facility.

IV. EFFLUENT MONITORING REQUIREMENTS

A. Monitoring Location EFF-001B

1. When discharging to the San Joaquin River, the Discharger shall monitor treated domestic wastewater at Monitoring Location EFF-001B as specified in Table D-3 and the testing requirements in section IV.A.2. If there was no discharge to the San Joaquin River during the designated monitoring period, monitoring is not required for that period. If there was no discharge, the Discharger shall so state in the self-monitoring report (SMR).

   Monitoring performed by the Discharger for compliance with its Waste Discharge Requirements for the discharge to the Delta Mendota Canal via the North Valley Regional Recycled Water Program Joint Outfall (NPDES Permit number CA0085316, Waste Discharge Requirements Order R5-2022-0034 and any revisions to or reissued Waste Discharge Requirements) may be used to meet these monitoring requirements. In the event that effluent samples for monitoring the Delta Mendota Canal discharge were not collected on the same day(s) that discharge to the San Joaquin River occurred, this data can be used by the Discharger to meet the monitoring requirements of Table D-3 if the effluent samples were collected within the same monitoring period (e.g., within the same month, quarter, etc.).

Table D-3. Effluent Monitoring

Parameter	Units	Sample Type	Minimum Sampling Frequency
Flow	MGD	Meter	Continuous
Biochemical Oxygen Demand (5-day @ 20° C)	mg/L	24-hour Composite	3/Week

Parameter	Units	Sample Type	Minimum Sampling Frequency
Biochemical Oxygen Demand (5-day @ 20° C)	Percent Removal	Calculate	1/Month
Total Suspended Solids	mg/L	24-hour Composite	3/Week
Total Suspended Solids	Percent Removal	Calculate	1/Month
pH	Standard Units	Meter	1/Day
Mercury, Total Recoverable	µg/L	Grab	1/Month
Methyl Mercury	µg/L	Grab	1/Month
Ammonia, Total as Nitrogen	mg/L	Grab	1/Week
Nitrate plus Nitrite, as Nitrogen	mg/L	24-hour Composite	2/Month
Electrical Conductivity	µmhos/cm	24-hour Composite	2/Month
Chlorpyrifos	µg/L	Grab	1/Year
Diazinon	µg/L	Grab	1/Year
Dissolved Oxygen	mg/L	Grab	2/Month
Dissolved Organic Carbon	mg/L	24-hour Composite	1/Quarter
Hardness, total (as $CaCO_3$)	mg/L	24-hour Composite	1/Quarter
Temperature	°C	Grab	2/Month

2. Table D-3 Testing Requirements. The Discharger shall comply with the following testing requirements when monitoring for the parameters described in Table D-3:
   a. **Composite Sample.** All composite samples shall be collected from a 24-hour flow proportional composite.
   b. **Applicable to all parameters.** Pollutants shall be analyzed using the analytical methods described in 40 C.F.R. Part 136 or by methods approved by the Central Valley Water Board or the State Water Board.
   c. **Grab Sample.** A grab sample is defined as an individual discrete sample collected over a period of time not exceeding 15 minutes. It can be taken manually, using a pump, scoop, vacuum, or other suitable device.
   d. **Ammonia.** Samples for pH and temperature shall be recorded at the time of ammonia sample collection.
   e. **Field Meter.** A handheld field meter may be used for **dissolved oxygen, electrical conductivity, temperature, and pH**, provided the meter

utilizes a U.S. EPA-approved algorithm/method and is calibrated and maintained in accordance with the manufacturer's instructions. A calibration and maintenance log for each meter used for monitoring required by this Monitoring and Reporting Program shall be maintained at the Facility.

f. **Dissolved Organic Carbon.** Hardness, total (as $CaCO_3$) and pH samples shall be taken concurrent with dissolved organic carbon samples.

g. **Methylmercury.** Samples for total mercury and methylmercury shall be taken using clean hands/dirty hands procedures, as described in U.S. EPA method 1669: Sampling Ambient Water for Trace Metals at EPA Water Quality Criteria Levels, for collection of equipment blanks (section 9.4.4.2), and shall be analyzed by U.S. EPA method 1630/1631 (Revision E) with a reporting limit of 0.05 ng/L for methylmercury and 0.5 nanograms per liter (ng/L) for total mercury.

h. **Chlorpyrifos and Diazinon.** Chlorpyrifos and diazinon shall be sampled using U.S. EPA Method 625M, Method 8141, or equivalent GC/MS method with a lower Reporting Limit than the Basin Plan Water Quality Objectives of 0.015 µg/L and 0.1 µg/L for chlorpyrifos and diazinon, respectively.

V. WHOLE EFFLUENT TOXICITY (WET) TESTING REQUIREMENTS

A. Acute Toxicity Testing.

The Discharger shall conduct acute toxicity testing to determine whether the effluent is contributing acute toxicity to the receiving water. The Discharger shall meet the following acute toxicity testing requirements:

1. *Monitoring Frequency* – The Discharger shall perform **quarterly** acute toxicity while the Facility is discharging to the San Joaquin River and concurrent with effluent ammonia sampling.

   Acute toxicity testing performed by the Discharger for compliance with Waste Discharge Requirements for the discharge to the Delta Mendota Canal via the North Valley Regional Recycled Water Program Joint Outfall (NPDES Permit number CA0085316, Waste Discharge Requirements Order R5-2022-0034 and any revisions to or reissued Waste Discharge Requirements) may be used to meet this monitoring requirement. In the event that effluent samples for monitoring the Delta Mendota Canal discharge were not collected on the same day that discharge to the San Joaquin River occurred, this data can be used by the Discharger to meet the acute toxicity monitoring requirement if the effluent samples were collected within the same monitoring period (i.e., within the same quarter).

2. *Sample Types* – The Discharger may use flow-through or static renewal testing. For static renewal testing, the samples shall be flow proportional 24-hour composites and shall be representative of the volume and quality of the discharge. The effluent samples shall be taken at Monitoring Location EFF-001B.

3. *Test Species* – The test species shall be rainbow trout (*Oncorhynchus mykiss*).
4. *Test Duration* – Test duration shall be 96 hours.
5. *Methods* – The acute toxicity testing samples shall be analyzed using EPA-821-R-02-012, Fifth Edition. Temperature and pH shall be recorded at the time of sample collection. No pH adjustment may be made unless approved by the Executive Officer.
6. *Test Failure* – If an acute toxicity test does not meet all test acceptability criteria, as specified in the test method, the Discharger must re-sample and re-test as soon as possible, not to exceed 7 days following notification of test failure.

B. Chronic Toxicity Testing.

The Discharger shall conduct chronic toxicity testing to determine whether the effluent is contributing chronic toxicity to the receiving water. The Discharger shall meet the following chronic toxicity testing requirements:

The Executive Officer may specify more frequent monitoring in the Notice of Applicability.

1. *Monitoring Frequency* – The Discharger shall perform **quarterly** chronic toxicity testing when discharging to the San Joaquin River. If the result of the routine chronic toxicity testing event exhibits toxicity, demonstrated by a result greater than 1.3 TUc (as 100/EC25) AND a percent effect greater than 25 percent at 100 percent effluent, the Discharger has the option of conducting two additional compliance monitoring chronic toxicity testing events in order to calculate a median. The optional compliance monitoring events shall occur at least one week apart, and the final monitoring event shall be initiated no later than 6 weeks from the routine monitoring event that exhibited toxicity. See Compliance Determination Section VIII.J of the Municipal General Order for procedures for calculating the 6-week median.

   Chronic toxicity testing performed by the Discharger for compliance with Waste Discharge Requirements) for the discharge to the Delta Mendota Canal via the North Valley Regional Recycled Water Program Joint Outfall (NPDES Permit number CA0085316, Waste Discharge Requirements Order R5-2022-0034 and any revisions to or reissued Waste Discharge Requirements) may be used to meet this monitoring requirement. In the event that effluent samples for monitoring the Delta Mendota Canal discharge were not collected on the same day(s) that discharge to the San Joaquin River occurred, this data can be used by the Discharger to meet the chronic toxicity monitoring requirement if the effluent samples were collected within the same monitoring period (e.g., within the same quarter).
2. *Sample Types* – Effluent samples shall be flow proportional 24-hour composite samples and shall be representative of the volume and quality of the discharge. The effluent samples shall be taken at Monitoring Location EFF-001B. The receiving water control shall be a grab sample obtained from Monitoring Location RSW-001.

3. *Sample Volumes* – Adequate sample volumes shall be collected to provide renewal water to complete the test in the event that the discharge is intermittent.
4. *Test Species* – Chronic toxicity testing measures sublethal (e.g., reduced growth, reproduction) and/or lethal effects to test organisms exposed to an effluent compared to that of the control organisms. The testing shall be conducted using the cladoceran, water flea, *Ceriodaphnia dubia*.
5. *Methods* – The presence of chronic toxicity shall be estimated as specified in Short-term Methods for Estimating the Chronic Toxicity of Effluents and Receiving Waters to Freshwater Organisms, Fourth Edition, EPA/821-R-02-013, October 2002.
6. *Reference Toxicant* – As required by the *Policy for Implementation of Toxics Standards for Inland Surface Waters, Enclosed Bays, and Estuaries of California* (SIP), all chronic toxicity tests shall be conducted with concurrent testing with a reference toxicant and shall be reported with the chronic toxicity test results.
7. *Dilutions* –For routine and compliance chronic toxicity monitoring, chronic toxicity testing shall be performed using the dilution series identified in Table D-4, below. For TRE monitoring, chronic toxicity testing shall be performed using the dilution series identified, below, unless an alternative dilution series is detailed in the submitted TRE Action Plan. A receiving water control or laboratory water control may be used as the diluent.

Table D-4. Chronic Toxicity Testing Dilution Series

Sample	Dilution	Dilution	Dilution	Dilution	Dilution	Dilution
Effluent	100%	75%	50%	25%	12.5%	0%
Control Water	0%	25%	50%	75%	87.5%	100%

8. *Test Failure* – The Discharger must re-sample and re-test as soon as possible, but no later than fourteen (14) days after receiving notification of a test failure. A test failure is defined as follows:
   a. The reference toxicant test or the effluent test does not meet all test acceptability criteria as specified in the Short-term Methods for Estimating the Chronic Toxicity of Effluents and Receiving Waters to Freshwater Organisms, Fourth Edition, EPA/821-R-02-013, October 2002 (Method Manual), and its subsequent amendments or revisions; or
   b. The percent minimum significant difference (PMSD) measured for the test exceeds the upper PMSD bound variability criterion in Table 6 on page 52 of the Method Manual. (A retest is only required in this case if the test results do not exceed the monitoring trigger specified in the Special Provision at section VII.C.2.a.iii of the Municipal General Order.)

C. WET Testing Notification Requirements.

The Discharger shall notify the Central Valley Water Board within 24-hours after the receipt of test results exceeding the monitoring trigger during regular monitoring, or an exceedance of the acute toxicity effluent limitation.

D. WET Testing Reporting Requirements.

All toxicity test reports shall include the contracting laboratory's complete report provided to the Discharger and shall be in accordance with the appropriate "Report Preparation and Test Review" sections of the method manuals. At a minimum, whole effluent toxicity monitoring shall be reported as follows:

1. **Chronic WET Reporting.** Chronic toxicity monitoring results shall be reported to the Central Valley Water Board with the quarterly self-monitoring report, and shall contain, at minimum:
   a. The results expressed in TUc, measured as 100/NOEC, and also measured as 100/LC50, 100/EC25, 100/IC25, and 100/IC50, as appropriate.
   b. The percent effect at the instream waste concentration;
   c. The statistical methods used to calculate endpoints;
   d. The statistical output page, which includes the calculation of the percent minimum significant difference (PMSD);
   e. The dates of sample collection and initiation of each toxicity test; and
   f. The results compared to the numeric toxicity monitoring trigger or effluent limitation.

   Additionally, the annual SMR shall contain an updated chronology of chronic toxicity test results expressed in TUc (as 100/EC_{25}) and percent effect at the instream waste concentration, and organized by type of test (survival, growth or reproduction), and monitoring frequency, i.e., either quarterly, monthly, monthly median, or TRE.
2. **Acute WET Reporting.** Acute toxicity test results shall be submitted with the quarterly SMR, for the quarter acute toxicity tests are conducted, and reported as percent survival.
3. **TRE or Toxicity Evaluation Study Reporting**. Reports for TREs or a Toxicity Evaluation Study shall be submitted in accordance with the schedule contained in the Discharger's approved TRE Workplan, or as amended by the Discharger's TRE Action Plan.
4. **Quality Assurance (QA).** The Discharger must provide the following information for QA purposes:
   a. Results of the applicable reference toxicant data with the statistical output page giving the species, NOEC, LOEC, type of toxicant, dilution water used, concentrations used, PMSD, and dates tested.
   b. The reference toxicant control charts for each endpoint, which include summaries of reference toxicant tests performed by the contracting laboratory.

c. Any information on deviations or problems encountered and how they were dealt with.

VI. LAND DISCHARGE MONITORING REQUIREMENTS – NOT APPLICABLE

VII. RECYCLING MONITORING REQUIREMENTS – NOT APPLICABLE

VIII. RECEIVING WATER MONITORING REQUIREMENTS

A. Monitoring Locations RSW-001 and RSW-002

1. When discharging continuously for a period of 72-hours or more to Discharge Point 001 in the San Joaquin River, the Discharger shall monitor the San Joaquin River at Monitoring Locations RSW-001 and RSW-002 as specified in Table D-5 and the testing requirements in section VIII.A.2. If there was no discharge to receiving water during the designated monitoring period, monitoring is not required during that period. Whenever monitoring is not required, the Discharger shall state so in the SMR.

Table D-5. Receiving Water Monitoring Requirements

Parameter	Units	Sample Type	Monitoring Location	Minimum Sampling Frequency
pH	Standard Units	Grab	RSW-001, RSW-002	1/Week
Dissolved Oxygen	mg/L	Grab	RSW-001, RSW-002	1/Week
Electrical Conductivity at 25°Celcius	µmhos/cm	Grab	RSW-001, RSW-002	1/Week
Hardness, Total (as $CaCO_3$)	mg/L	Grab	RSW-001, RSW-002	1/Quarter
Temperature	ºF	Grab	RSW-001, RSW-002	1/Week
Turbidity	NTU	Grab	RSW-001, RSW-002	1/Week

2. Table D-5 Testing Requirements. The Discharger shall comply with the following testing requirements when monitoring for the parameters described in Table D-5:
   a. **Applicable to all parameters.** Pollutants shall be analyzed using the analytical methods described in 40 C.F.R. Part 136 or by methods approved by the Central Valley Water Board or the State Water Board.
   b. **Grab Sample.** A grab sample is defined as an individual discrete sample collected over a period of time not exceeding 15 minutes. It can be taken manually, using a pump, scoop, vacuum, or other suitable device.
   c. **Field Meter.** A handheld field meter may be used for **dissolved oxygen, electrical conductivity, temperature and pH**, provided the meter utilizes a U.S. EPA-approved algorithm/method and is calibrated and maintained in accordance with the manufacturer's instructions. A calibration and maintenance log for each meter used for monitoring required by this Monitoring and Reporting Program shall be maintained at the Facility.

d. **Dissolved Organic Carbon.** Hardness, total (as $CaCO_3$) and pH samples shall be taken concurrent with dissolved organic carbon samples.

3. In conducting the receiving water sampling required by section VIII.A.1 above, a log shall be kept of the receiving water conditions throughout the reach bounded by Monitoring Locations RSW-001 and RSW-002. Attention shall be given to the presence or absence of:
   a. Floating or suspended matter;
   b. Discoloration;
   c. Bottom deposits;
   d. Aquatic life;
   e. Visible films, sheens, or coatings;
   f. Fungi, slimes, or objectionable growths; and
   g. Potential nuisance conditions.

   Notes on receiving water conditions shall be summarized in the monitoring report.

IX. OTHER MONITORING REQUIREMENTS

A. Biosolids – Not Applicable

B. Ponds – Not Applicable

C. Municipal Water Supply – Not Applicable

D. Filtration System and Ultraviolet Light (UV) Disinfection System

1. Monitoring Locations UVS-001, UVS-002, UVS-001A and UVS-002A

a. The Discharger shall monitor the filtration system at Monitoring Locations UVS-001 and UVS-002, and the UV disinfection system at Monitoring Locations UVS-001A and UVS-002A as follows, when discharging to the San Joaquin River, as specified in Table D-6 and the testing requirements in section IX.D.2.

Table D-6. Filtration and UV Disinfection System Monitoring Requirements

Parameter	Units	Sample Type	Monitoring Location	Sampling Frequency
Flow	MGD	Meter	UVS-001A, UVS-002A	Continuous
Turbidity	NTU	Meter	UVS-001, UVS-002	Continuous
Number of UV Banks in Operation	Number	Observation	--	Continuous
UV Transmittance	Percent	Meter	UVS-001A, UVS-002A	Continuous
UV Dose	mJ/cm^2	Calculate	--	Continuous
Total Coliform Organisms	MPN/100 mL	Grab	UVS-001A, UVS-002A	1/Day

2. Table D-6 Testing Requirements. The Discharger shall comply with the following testing requirements when monitoring for the parameters described in Table D-6:

a. **Applicable to all parameters.** Pollutants shall be analyzed using the analytical methods described in 40 C.F.R. part 136 or by methods that have been approved by the Central Valley Water Board or the State Water Board.

b. **For continuous analyzers.** The Discharger shall report documented routine meter maintenance activities including date, time of day, and duration, in which the analyzer(s) is not in operation and no turbidity measurements are available to report for the duration the meter is out of service. If analyzer(s) fail to provide continuous monitoring for more than two hours and influent and/or effluent from the disinfection process is not diverted for retreatment, the Discharger shall obtain and report hourly manual and/or grab sample results.

c. **Turbidity.** Report daily average and maximum turbidity.

d. **Continuous Analyzers.** The Discharger shall not decrease power settings or reduce the number of UV lamp banks in operation while the continuous analyzers are out of service and water is being disinfected.

e. **UV Banks**. Report daily minimum number of UV banks in operation.

f. **Report daily minimum hourly average UV transmittance**. The minimum hourly average transmittance shall consist of lowest average transmittance recorded over an hour of a day when flow is being discharged. If the system does not operate for an entire hour interval on a given day or if effluent flow is not discharged for an entire hour, the transmittance will be averaged based on the actual operation time when discharges are occurring.

g. **Report daily minimum hourly average UV dose.** The minimum hourly average dose shall consist of lowest hourly average dose provided in any channel that had at least one bank of lamps operating during the hour interval. For channels that did not operate for the entire hour interval or when effluent flow is not discharged for the entire hour, the dose will be averaged based on the actual operation time when discharges occurred.

E. Effluent Characterization and Receiving Water Characterization

The Discharger shall monitor the effluent at Monitoring Locations EFF-001B and the receiving water at RSW-001 for the constituents listed in Table D-7, as described in this section. Effluent characterization monitoring performed by the Discharger for compliance with its Waste Discharge Requirements for the discharge to the Delta Mendota Canal via the North Valley Regional Recycled Water Program Joint Outfall (NPDES Permit number CA0085316, Waste Discharge Requirements Order R5-2022-0034 and any revisions to or reissued Waste Discharge Requirements) may be used to meet this monitoring requirement.

1. **Monitoring Frequency**
   a. **Effluent Sampling.** Samples shall be collected from the effluent (Monitoring Location EFF-001B) **every two (2) months (6 sampling events)** between **1 January 2023 and 31 December 2023**.
   b. **Receiving Water Sampling.** Samples shall be collected from the receiving water (Monitoring Location RSW-001) **every two (2) months (6 sampling events)** between **1 January 2023 and 31 December 2023**.

   All sampling shall be analyzed for the constituents listed in Table D-7, below. The results of such monitoring shall be submitted to the Central Valley Water Board with the quarterly SMRs. Each individual monitoring event shall provide representative sample results for the effluent and receiving water.

   The Discharger may cease monitoring for the following constituents if they are not detected in the first characterization sample event (effluent) or first receiving water characterization sample: total cyanide, asbestos, dioxin, and EPA Method 608 polychlorinated biphenyls (PCB's) and chlorinated pesticides.

2. **Sample Type.** Effluent samples shall be taken as described in Table D-7, below and the testing requirements in section IX.E.4.

Table D-7. Effluent and Receiving Water Characterization Monitoring

CTR Number	Parameter	CAS Number	Units	Effluent Sample Type	Parameter Type
41	1,1,1-Trichloroethane	71-55-6	µg/L	Grab	Volatile Organics
37	1,1,2,2-Tetrachloroethane	79-34-5	µg/L	Grab	Volatile Organics
42	1,1,2-Trichloroethane	79-00-5	µg/L	Grab	Volatile Organics
28	1,1-Dichloroethane	75-34-3	µg/L	Grab	Volatile Organics
30	1,1-Dichloroethylene (DCE)	75-35-4	µg/L	Grab	Volatile Organics
101	1,2,4-Trichlorobenzene	120-82-1	µg/L	Grab	Volatile Organics
75	1,2-Dichlorobenzene	95-50-1	µg/L	Grab	Volatile Organics
29	1,2-Dichloroethane	107-06-2	µg/L	Grab	Volatile Organics
31	1,2-Dichloropropane	78-87-5	µg/L	Grab	Volatile Organics
76	1,3-Dichlorobenzene	541-73-1	µg/L	Grab	Volatile Organics
32	1,3-Dichloropropylene	542-75-6	µg/L	Grab	Volatile Organics

CTR Number	Parameter	CAS Number	Units	Effluent Sample Type	Parameter Type
77	1,4-Dichlorobenzene	106-46-7	µg/L	Grab	Volatile Organics
25	2-Chloroethyl vinyl Ether	110-75-8	µg/L	Grab	Volatile Organics
17	Acrolein	107-02-8	µg/L	Grab	Volatile Organics
18	Acrylonitrile	107-13-1	µg/L	Grab	Volatile Organics
19	Benzene	71-43-2	µg/L	Grab	Volatile Organics
20	Bromoform	75-25-2	µg/L	Grab	Volatile Organics
21	Carbon Tetrachloride	56-23-5	µg/L	Grab	Volatile Organics
22	Chlorobenzene	108-90-7	µg/L	Grab	Volatile Organics
24	Chloroethane	75-00-3	µg/L	Grab	Volatile Organics
26	Chloroform	67-66-3	µg/L	Grab	Volatile Organics
23	Dibromochloromethane	124-48-1	µg/L	Grab	Volatile Organics
27	Dichlorobromomethane	75-27-4	µg/L	Grab	Volatile Organics
33	Ethylbenzene	100-41-4	µg/L	Grab	Volatile Organics
89	Hexachlorobutadiene	87-68-3	µg/L	Grab	Volatile Organics
34	Methyl Bromide (Bromomethane)	74-83-9	µg/L	Grab	Volatile Organics
35	Methyl Chloride	74-87-3	µg/L	Grab	Volatile Organics
36	Methylene Chloride	75-09-2	µg/L	Grab	Volatile Organics
--	Methyl-tert-butyl ether (MTBE)	1634-04-4	µg/L	Grab	Volatile Organics
94	Naphthalene	91-20-3	µg/L	Grab	Volatile Organics
38	Tetrachloroethylene (PCE)	127-18-4	µg/L	Grab	Volatile Organics
39	Toluene	108-88-3	µg/L	Grab	Volatile Organics

CTR Number	Parameter	CAS Number	Units	Effluent Sample Type	Parameter Type
40	trans-1,2-Dichloroethylene	156-60-5	µg/L	Grab	Volatile Organics
43	Trichloroethylene (TCE)	79-01-6	µg/L	Grab	Volatile Organics
44	Vinyl Chloride	75-01-4	µg/L	Grab	Volatile Organics
85	1,2-Diphenylhydrazine	122-66-7	µg/L	Grab	Semi-Volatile Organics
55	2,4,6-Trichlorophenol	88-06-2	µg/L	Grab	Semi-Volatile Organics
46	2,4-Dichlorophenol	120-83-2	µg/L	Grab	Semi-Volatile Organics
47	2,4-Dimethylphenol	105-67-9	µg/L	Grab	Semi-Volatile Organics
49	2,4-Dinitrophenol	51-28-5	µg/L	Grab	Semi-Volatile Organics
82	2,4-Dinitrotoluene	121-14-2	µg/L	Grab	Semi-Volatile Organics
83	2,6-Dinitrotoluene	606-20-2	µg/L	Grab	Semi-Volatile Organics
71	2-Chloronaphthalene	91-58-7	µg/L	Grab	Semi-Volatile Organics
45	2-Chlorophenol	95-57-8	µg/L	Grab	Semi-Volatile Organics
48	2-Methyl-4,6-Dinitrophenol	534-52-1	µg/L	Grab	Semi-Volatile Organics
50	2-Nitrophenol	88-75-5	µg/L	Grab	Semi-Volatile Organics
78	3,3-Dichlorobenzidine	91-94-1	µg/L	Grab	Semi-Volatile Organics
69	4-Bromophenyl Phenyl Ether	101-55-3	µg/L	Grab	Semi-Volatile Organics
52	4-Chloro-3-methylphenol	59-50-7	µg/L	Grab	Semi-Volatile Organics
72	4-Chlorophenyl Phenyl Ether	7005-72-3	µg/L	Grab	Semi-Volatile Organics
51	4-Nitrophenol	100-02-7	µg/L	Grab	Semi-Volatile Organics
56	Acenaphthene	83-32-9	µg/L	Grab	Semi-Volatile Organics
57	Acenaphthylene	208-96-8	µg/L	Grab	Semi-Volatile Organics

CTR Number	Parameter	CAS Number	Units	Effluent Sample Type	Parameter Type
58	Anthracene	120-12-7	µg/L	Grab	Semi-Volatile Organics
59	Benzidine	92-87-5	µg/L	Grab	Semi-Volatile Organics
60	Benzo(a)Anthracene	56-55-3	µg/L	Grab	Semi-Volatile Organics
61	Benzo(a)Pyrene	50-32-8	µg/L	Grab	Semi-Volatile Organics
62	Benzo(b)Fluoranthene	205-99-2	µg/L	Grab	Semi-Volatile Organics
63	Benzo(ghi)Perylene	191-24-2	µg/L	Grab	Semi-Volatile Organics
64	Benzo(k)Fluoranthene	207-08-9	µg/L	Grab	Semi-Volatile Organics
65	Bis (2-Chloroethoxy) Methane	111-91-1	µg/L	Grab	Semi-Volatile Organics
66	Bis (2-Chloroethyl) Ether	111-44-4	µg/L	Grab	Semi-Volatile Organics
67	Bis (2-Chloroisopropyl) Ether	108-60-1	µg/L	Grab	Semi-Volatile Organics
68	Bis(2-Ethylhexyl) Phthalate	117-81-7	µg/L	Grab	Semi-Volatile Organics
70	Butylbenzyl Phthalate	85-68-7	µg/L	Grab	Semi-Volatile Organics
73	Chrysene	218-01-9	µg/L	Grab	Semi-Volatile Organics
74	Dibenzo(a,h)anthracene	53-70-3	µg/L	Grab	Semi-Volatile Organics
79	Diethyl Phthalate	84-66-2	µg/L	Grab	Semi-Volatile Organics
80	Dimethyl Phthalate	131-11-3	µg/L	Grab	Semi-Volatile Organics
81	Di-n-butyl Phthalate	84-74-2	µg/L	Grab	Semi-Volatile Organics
84	Di-n-Octyl Phthalate	117-84-0	µg/L	Grab	Semi-Volatile Organics
86	Fluoranthene	206-44-0	µg/L	Grab	Semi-Volatile Organics
87	Fluorene	86-73-7	µg/L	Grab	Semi-Volatile Organics
88	Hexachlorobenzene	118-74-1	µg/L	Grab	Semi-Volatile Organics

CTR Number	Parameter	CAS Number	Units	Effluent Sample Type	Parameter Type
90	Hexachlorocyclopentadiene	77-47-4	µg/L	Grab	Semi-Volatile Organics
91	Hexachloroethane	67-72-1	µg/L	Grab	Semi-Volatile Organics
92	Indeno(1,2,3-cd) Pyrene	193-39-5	µg/L	Grab	Semi-Volatile Organics
93	Isophorone	78-59-1	µg/L	Grab	Semi-Volatile Organics
95	Nitrobenzene	98-95-3	µg/L	Grab	Semi-Volatile Organics
96	N-Nitrosodimethylamine	62-75-9	µg/L	Grab	Semi-Volatile Organics
97	N-Nitrosodi-n-Propylamine	621-64-7	µg/L	Grab	Semi-Volatile Organics
98	N-Nitrosodiphenylamine	86-30-6	µg/L	Grab	Semi-Volatile Organics
53	Pentachlorophenol (PCP)	87-86-5	µg/L	Grab	Semi-Volatile Organics
99	Phenanthrene	85-01-8	µg/L	Grab	Semi-Volatile Organics
54	Phenol	108-95-2	µg/L	Grab	Semi-Volatile Organics
100	Pyrene	129-00-0	µg/L	Grab	Semi-Volatile Organics
--	Aluminum	7429-90-5	µg/L	24-hour Composite	Inorganics
1	Antimony, Total	7440-36-0	µg/L	24-hour Composite	Inorganics
2	Arsenic, Total	7440-38-2	µg/L	24-hour Composite	Inorganics
15	Asbestos	1332-21-4	µg/L	24-hour Composite	Inorganics
3	Beryllium, Total	7440-41-7	µg/L	24-hour Composite	Inorganics
4	Cadmium, Total	7440-43-9	µg/L	24-hour Composite	Inorganics
5	Chromium, Total	7440-47-3	µg/L	24-hour Composite	Inorganics
6	Copper, Total	7440-50-8	µg/L	24-hour Composite	Inorganics
--	Iron, Total	7439-89-6	µg/L	24-hour Composite	Inorganics

CTR Number	Parameter	CAS Number	Units	Effluent Sample Type	Parameter Type
7	Lead, Total	7439-92-1	µg/L	24-hour Composite	Inorganics
--	Manganese, Total	7439-96-5	µg/L	24-hour Composite	Inorganics
--	Mercury, Methyl	22967-92-6	µg/L	Grab	Inorganics
8	Mercury, Total	7439-97-6	µg/L	Grab	Inorganics
9	Nickel, Total	7440-02-0	µg/L	24-hour Composite	Inorganics
10	Selenium, Total	7782-49-2	µg/L	24-hour Composite	Inorganics
11	Silver, Total	7440-22-4	µg/L	24-hour Composite	Inorganics
12	Thallium, Total	7440-28-0	µg/L	24-hour Composite	Inorganics
13	Zinc, Total	7440-66-6	µg/L	24-hour Composite	Inorganics
--	Boron	7440-42-8	µg/L	24-hour Composite	Non-Metals/ Minerals
--	Chloride	16887-00-6	mg/L	24-hour Composite	Non-Metals/ Minerals
14	Cyanide, Total (as CN)	57-12-5	µg/L	Grab	Non-Metals/ Minerals
--	Phosphorus, Total (as P)	7723-14-0	mg/L	Grab or 24-hour Composite	Non-Metals/ Minerals
--	Sulfate	14808-79-8	mg/L	24-hour Composite	Non-Metals/ Minerals
--	Sulfide (as S)	5651-88-7	mg/L	24-hour Composite	Non-Metals/ Minerals
16	2,3,7,8-TCDD (Dioxin)	1746-01-6	mg/L	24-hour Composite	Pesticides/ PCBs/ Dioxins
110	4,4-DDD	72-54-8	µg/L	24-hour Composite	Pesticides/ PCBs/ Dioxins
109	4,4-DDE	72-55-9	µg/L	24-hour Composite	Pesticides/ PCBs/ Dioxins
108	4,4-DDT	50-29-3	µg/L	24-hour Composite	Pesticides/ PCBs/ Dioxins

CTR Number	Parameter	CAS Number	Units	Effluent Sample Type	Parameter Type
102	Aldrin	309-00-2	µg/L	24-hour Composite	Pesticides/ PCBs/ Dioxins
103	alpha-BHC (Benzene hexachloride)	319-84-6	µg/L	24-hour Composite	Pesticides/ PCBs/ Dioxins
112	alpha-Endosulfan	959-98-8	µg/L	24-hour Composite	Pesticides/ PCBs/ Dioxins
104	beta-BHC (Benzene hexachloride)	319-85-7	µg/L	24-hour Composite	Pesticides/ PCBs/ Dioxins
113	beta-Endosulfan	33213-65-9	µg/L	24-hour Composite	Pesticides/ PCBs/ Dioxins
107	Chlordane	57-74-9	µg/L	24-hour Composite	Pesticides/ PCBs/ Dioxins
106	delta-BHC (Benzene hexachloride)	319-86-8	µg/L	24-hour Composite	Pesticides/ PCBs/ Dioxins
111	Dieldrin	60-57-1	µg/L	24-hour Composite	Pesticides/ PCBs/ Dioxins
114	Endosulfan Sulfate	1031-07-8	µg/L	24-hour Composite	Pesticides/ PCBs/ Dioxins
115	Endrin	72-20-8	µg/L	24-hour Composite	Pesticides/ PCBs/ Dioxins
116	Endrin Aldehyde	7421-93-4	µg/L	24-hour Composite	Pesticides/ PCBs/ Dioxins
105	gamma-BHC (Benzene hexachloride or Lindane)	58-89-9	µg/L	24-hour Composite	Pesticides/ PCBs/ Dioxins
117	Heptachlor	76-44-8	µg/L	24-hour Composite	Pesticides/ PCBs/ Dioxins
118	Heptachlor Epoxide	1024-57-3	µg/L	24-hour Composite	Pesticides/ PCBs/ Dioxins

CTR Number	Parameter	CAS Number	Units	Effluent Sample Type	Parameter Type
--	Polychlorinated Biphenyl (PCB) 1016	12674-11-2	µg/L	24-hour Composite	Pesticides/ PCBs/ Dioxins
--	PCB 1221	11104-28-2	µg/L	24-hour Composite	Pesticides/ PCBs/ Dioxins
--	PCB 1232	11141-16-5	µg/L	24-hour Composite	Pesticides/ PCBs/ Dioxins
--	PCB 1242	53469-21-9	µg/L	24-hour Composite	Pesticides/ PCBs/ Dioxins
--	PCB 1248	12672-29-6	µg/L	24-hour Composite	Pesticides/ PCBs/ Dioxins
--	PCB 1254	11097-69-1	µg/L	24-hour Composite	Pesticides/ PCBs/ Dioxins
--	PCB 1260	11096-82-5	µg/L	24-hour Composite	Pesticides/ PCBs/ Dioxins
126	Toxaphene	8001-35-2	µg/L	24-hour Composite	Pesticides/ PCBs/ Dioxins
--	pH	--	SU	Grab	Conventional Parameters
--	Temperature	--	ºF	Grab	Conventional Parameters
--	Specific Conductance (Electrical Conductivity or EC)	--	µmhos/ cm	Grab	Non-Conventional Parameters
--	Dissolved Organic Carbon (DOC)	DOC	mg/L	Grab or 24-hour Composite	Non-Conventional Parameters
--	Foaming Agents (MBAS)	MBAS	mg/L	24-hour Composite	Non-Conventional Parameters
--	Hardness (as CaCO3)	471-34-1	mg/L	24-hour Composite	Non-Conventional Parameters
--	Total Dissolved Solids (TDS)	TDS	mg/L	24-hour Composite	Non-Conventional Parameters

CTR Number	Parameter	CAS Number	Units	Effluent Sample Type	Parameter Type
--	Ammonia (as N)	7664-41-7	mg/L	Grab or 24-hour Composite	Nutrients
--	Nitrate (as N)	14797-55-8	mg/L	Grab or 24-hour Composite	Nutrients
--	Nitrite (as N)	14797-65-0	mg/L	Grab or 24-hour Composite	Nutrients
--	1,1,2-Trichloro-1,2,2-Trifluoroethane	76-13-1	µg/L	Grab	Other Constituents Of Concern (CoC)
--	1,2,3-Trichloropropane (TCP)	96-18-4	ug/L	Grab	Other CoC
--	1,2-Dibromo-3-chloropropane (DBCP)	96-12-8	µg/L	24-hour Composite	Other CoC
--	2,4,5-TP (Silvex)	93-72-1	µg/L	24-hour Composite	Other CoC
--	2,4-D	94-75-7	µg/L	24-hour Composite	Other CoC
--	Alachlor	15972-60-8	µg/L	24-hour Composite	Other CoC
--	Atrazine	1912-24-9	µg/L	24-hour Composite	Other CoC
--	Barium	7440-39-3	µg/L	24-hour Composite	Other CoC
--	Bentazon	25057-89-0	µg/L	24-hour Composite	Other CoC
--	Carbofuran	1563-66-2	µg/L	Grab or 24-hour Composite	Other CoC
--	Chlorpyrifos	2921-88-2	µg/L	Grab or 24-hour Composite	Other CoC
--	Dalapon	75-99-0	µg/L	24-hour Composite	Other CoC
--	Di(2-ethylhexyl)adipate	103-23-1	µg/L	24-hour Composite	Other CoC
--	Diazinon	333-41-5	µg/L	Grab or 24-hour Composite	Other CoC

CTR Number	Parameter	CAS Number	Units	Effluent Sample Type	Parameter Type
--	Dinoseb	88-85-7	µg/L	24-hour Composite	Other CoC
--	Diquat	85-00-7	µg/L	24-hour Composite	Other CoC
--	Endothal	145-73-3	µg/L	24-hour Composite	Other CoC
--	Ethylene Dibromide (EDB)	106-93-4	µg/L	24-hour Composite	Other CoC
--	Fluoride	16984-48-8	mg/L	24-hour Composite	Other CoC
--	Methoxychlor	72-43-5	µg/L	24-hour Composite	Other CoC
--	Molinate (Ordram)	2212-67-1	µg/L	24-hour Composite	Other CoC
--	Molybdenum	7439-98-7	µg/L	24-hour Composite	Other CoC
--	Oxamyl	23135-22-0	µg/L	24-hour Composite	Other CoC
--	Picloram	6607	µg/L	24-hour Composite	Other CoC
--	Simazine (Princep)	122-34-9	µg/L	24-hour Composite	Other CoC
--	Styrene	100-42-5	µg/L	Grab	Other CoC
--	Thiobencarb	28249-77-6	µg/L	24-hour Composite	Other CoC
--	Tributyltin	688-73-3	µg/L	24-hour Composite	Other CoC
--	Trichlorofluoromethane	75-69-4	µg/L	Grab	Other CoC
--	Xylenes	1330-20-7	µg/L	Grab	Other CoC

4. Table D-7 Testing Requirements. The Discharger shall comply with the following testing requirements when monitoring for the parameters described in Table D-7:
   a **Bis (2-ethylhexyl) phthalate.** In order to verify if bis (2-ethylhexyl) phthalate is truly present in the effluent discharge, the Discharger shall take steps to assure that sample containers, sampling apparatus, and analytical equipment are not sources of the detected contaminant.
   b. **Composite Sample.** All composite samples shall be collected from a 24-hour flow proportional composite.

c. **Grab Sample.** A grab sample is defined as an individual discrete sample collected over a period of time not exceeding 15 minutes. It can be taken manually, using a pump, scoop, vacuum, or other suitable device.

d. **Concurrent Sampling.** The Discharger is not required to conduct effluent monitoring for constituents that have already been sampled in a given month, as required in Table D-3, except for hardness, pH, and temperature, which shall be conducted concurrently with the effluent sampling.

e. **Total Mercury and methylmercury.** Samples for total mercury and methylmercury shall be taken using clean hands/dirty hands procedures, as described in U.S. EPA method 1669: Sampling Ambient Water for Trace Metals at EPA Water Quality Criteria Levels, for collection of equipment blanks (section 9.4.4.2), and shall be analyzed by U.S. EPA method 1630/1631 (Revision E) with a reporting limit of 0.05 ng/L for methylmercury and 0.5 nanograms per liter (ng/L) for total mercury.

X. REPORTING REQUIREMENTS

A. General Monitoring and Reporting Requirements

1. The Discharger shall comply with all Standard Provisions (Attachment D of the Municipal General Order) related to monitoring, reporting, and recordkeeping. Upon written request of the Central Valley Water Board, the Discharger shall submit a summary monitoring report. The report shall contain both tabular and graphical summaries of the monitoring data obtained during the previous year(s).
2. The Discharger shall report to the Central Valley Water Board any toxic chemical release data it reports to the State Emergency Response Commission within 15 days of reporting the data to the Commission pursuant to section 313 of the "Emergency Planning and Community Right to Know Act" of 1986.
3. Monitoring frequencies may be adjusted by the Executive Officer to a less frequent basis if a Discharger makes a request and the request is backed by statistical trends of monitoring data submitted.

B. Self-Monitoring Reports

1. The Discharger shall electronically submit SMR's using the State Water Board's California Integrated Water Quality System (CIWQS) Program website (www.waterboards.ca.gov/ciwqs/index.html). The CIWQS Web site will provide additional information for SMR submittal in the event there will be a planned service interruption for electronic submittal.
2. The Discharger shall report in the SMR the results for all monitoring specified in this MRP under sections III through IX. The Discharger shall submit monthly, quarterly, and annual SMR's including the results of all required monitoring using U.S. EPA-approved test methods or other test methods specified in this MRP. SMR's are to include all new monitoring results obtained since the last SMR was submitted. If the Discharger monitors any pollutant more frequently than required by this MRP, the results of this

monitoring shall be included in the calculations and reporting of the data submitted in the SMR.

3. Monitoring periods and reporting for all required monitoring shall begin on 1 August 2022 and be completed according to the following:

Table D-8. Monitoring Periods and Reporting Schedule

Sampling Frequency	Monitoring Period	SMR Due Date
Continuous	All	Submit with monthly SMR
1/Day	(Midnight through 11:59 PM) or any 24-hour period that reasonably represents a calendar day for purposes of sampling.	Submit with monthly SMR
1/Week	Sunday through Saturday	Submit with monthly SMR
3/Week	Sunday through Saturday	Submit with monthly SMR
1/Month	1st day of calendar month through last day of calendar month	First day of second calendar month following month of sampling
2/Month	1st day of calendar month through last day of calendar month	First day of second calendar month following month of sampling
1/Quarter	1 January through 31 March; 1 April through 30 June; 1 July through 30 September; 1 October through 31 December	1 May; 1 August; 1 November; 1 February of following year (respectively)
1/Year	1 January through 31 December	1 February of following year

4. **Reporting Protocols.** The Discharger shall report with each sample result the applicable RL and the current laboratory's MDL, as determined by the procedure in 40 C.F.R. part 136.

   The Discharger shall report the results of analytical determinations for the presence of chemical constituents in a sample using the following reporting protocols:

   a. Sample results greater than or equal to the RL shall be reported as measured by the laboratory (i.e., the measured chemical concentration in the sample).

   b. Sample results less than the RL, but greater than or equal to the laboratory's MDL, shall be reported as "Detected, but Not Quantified," or DNQ. The estimated chemical concentration of the sample shall also be reported.

      For the purposes of data collection, the laboratory shall write the estimated chemical concentration next to DNQ. The laboratory may, if

such information is available, include numerical estimates of the data quality for the reported result. Numerical estimates of data quality may be percent accuracy (± a percentage of the reported value), numerical ranges (low to high), or any other means considered appropriate by the laboratory.

c. Sample results less than the laboratory's MDL shall be reported as "Not Detected," or ND.

d. Dischargers are to instruct laboratories to establish calibration standards so that the ML value (or its equivalent if there is differential treatment of samples relative to calibration standards) is the lowest calibration standard. At no time is the Discharger to use analytical data derived from extrapolation beyond the lowest point of the calibration curve.

5. **Multiple Sample Data.** When determining compliance with an AMEL, AWEL, or maximum daily effluent limitation (MDEL) for priority pollutants and more than one sample result is available, the Discharger shall compute the arithmetic mean unless the data set contains one or more reported determinations of "Detected, but Not Quantified" (DNQ) or ND. In those cases, the Discharger shall compute the median in place of the arithmetic mean in accordance with the following procedure:

   a. The data set shall be ranked from low to high, ranking the reported ND determinations lowest, DNQ determinations next, followed by quantified values (if any). The order of the individual ND or DNQ determinations is unimportant.

   b. The median value of the data set shall be determined. If the data set has an odd number of data points, then the median is the middle value. If the data set has an even number of data points, then the median is the average of the two values around the middle unless one or both of the points are ND or DNQ, in which case the median value shall be the lower of the two data points where DNQ is lower than a value and ND is lower than DNQ.

6. The Discharger shall submit SMR's in accordance with the following requirements:

   a. The Discharger shall arrange all reported data in a tabular format. The data shall be summarized to clearly illustrate whether the facility is operating in compliance with interim and/or final effluent limitations. The Discharger is not required to duplicate the submittal of data that is entered in a tabular format within CIWQS. When electronic submittal of data are required and CIWQS does not provide for entry into a tabular format within the system, the Discharger shall electronically submit the data in a tabular format as an attachment.

   b. The Discharger shall attach a cover letter to the SMR. The information contained in the cover letter shall clearly identify violations of the waste discharge requirements; discuss corrective actions taken or planned; and the proposed time schedule for corrective actions. Identified violations must include a description of the requirement that was violated and a description of the violation. The cover letter must be uploaded directly into

CIWQS and violations must be entered into CIWQS under the Violations tab for the reporting period in which the violation occurred in addition to them being identified in the cover letter.

c. The Discharger shall attach final laboratory reports for all contracted, commercial laboratories, including quality assurance/quality control information, with all its SMR's for which sample analyses were performed. Bench sheets are not required but should be available upon request by Regional Board staff.

7. The Discharger shall submit in the SMR's calculations and reports in accordance with the following requirements.

   a. **Calendar Annual Average Limitations –** For Dischargers subject to effluent limitations specified as "calendar annual average" (e.g., electrical conductivity), the Discharger shall report the calendar annual average in the December SMR. The annual average shall be calculated as the average of the samples gathered for the calendar year.

   b. **Removal Efficiency (BOD_5 and TSS) –** The Discharger shall calculate and report the percent removal of BOD_5 and TSS in the SMR's. The percent removal shall be calculated as specified in section VIII.A of the Limitations and Discharge Requirements in the Municipal General Order.

   c. **Total Coliform Organisms Effluent Limitations –** The Discharger shall calculate and report the 7-day median of total coliform organisms for the effluent. The 7-day median of total coliform organisms shall be calculated as specified in section VIII.E of the Limitations and Discharge Requirements in the Municipal General Order.

   D. **Total Calendar Annual Mass Loading Mercury Effluent Limitations –** Each Discharger subject to mass loading effluent limitations for total mercury in section V.A.1.c.xi or section V.A.2.b.iv of the Municipal General Order shall calculate and report the total calendar annual mercury mass loading for the effluent in the December SMR. The total calendar year annual mass loading shall be calculated as specified in section VIII.C of the Limitations and Discharge Requirements in the Municipal General Order.

   e. **Temperature Effluent Limitation – Not Applicable.**

   f. **Chlorpyrifos and Diazinon Effluent Limitations –** Each Discharger subject to effluent limitations for diazinon and chlorpyrifos in section V.A.1.c.ix of the Municipal General Order shall calculate and report the value of S_{AMEL} and S_{AWEL} for the effluent, using the equation in section V.A.1.c.ix and consistent with the Compliance Determination Language in section VIII.K of the Limitations and Discharge Requirements of the Municipal General Order.

   g. **Dissolved Oxygen Receiving Water Limitations.** The Discharger shall report monthly in the SMR the dissolved oxygen concentrations in the receiving water (Monitoring Locations RSW-001 and RSW 002).

   h. **Turbidity Receiving Water Limitations**. The Discharger shall calculate and report the turbidity increase in the receiving water applicable to the

natural turbidity condition specified in section VI.A.18.a, of the Limitations and Discharge Requirements in the Municipal General Order.

C. Discharge Monitoring Reports (DMR's)

1. The Discharger shall electronically submit DMR's together with SMR's using Electronic Self-Monitoring Reports module eSMR 2.5 or any upgraded version. Electronic submittal of DMR's will be in addition to electronic submittal of SMR's. Information about electronic submittal of DMR's is provided by the Discharge Monitoring Report website: (www.waterboards.ca.gov/water_issues/programs/discharge_monitoring).

D. Other Reports

1. **Special Study Reports.** Special study reports required by section VIII.C, Provisions, in this NOA shall be submitted in accordance with the reporting requirements in Table D-9, Technical Reports.
2. **Analytical Methods Report.** The Discharger shall complete and submit an Analytical Methods Report, electronically via CIWQS submittal, by the due date specified in Table D-9 below. The Analytical Methods Report shall include the following for each constituent listed in tables D-2, D-3, D-5, D-6, and D-7 of this NOA: 1) applicable water quality objective, 2) reporting level (RL), 3) method detection limit (MDL), and 4) analytical method. The analytical methods shall be sufficiently sensitive with RL's consistent with the SSM Rule (see also General Monitoring Provision F in the Municipal General Order), and with the Minimum Levels (ML's) in the SIP, Appendix 4. The "Reporting Level or RL" is synonymous with the "Method Minimum Level" described in the SSM Rule. If an RL is greater than the applicable water quality objective for a constituent, the Discharger shall explain how the proposed analytical method complies with the SSM Rule. Central Valley Water Board staff will provide a tool with this NOA to assist the Discharger in completing this requirement. The tool will include the constituents and associated applicable water quality objectives to be included in the Analytical Methods Report.
3. **Annual Operations Report.** The Discharger shall submit in accordance with the reporting requirements in Table D-9, Technical Reports, a written report containing the following:
   a. The names, certificate grades, and general responsibilities of all persons employed at the Facility.
   b. The names and telephone numbers of persons to contact regarding the plant for emergency and routine situations.
   c. A statement certifying when the flow meter(s) and other monitoring instruments and devices were last calibrated, including identification of who performed the calibration.
   d. A statement certifying whether the current operation and maintenance manual, and contingency plan, reflect the wastewater treatment plant as currently constructed and operated, and the dates when these documents were last revised and last reviewed for adequacy.

e. The Discharger may also be requested to submit an annual report to the Central Valley Water Board with both tabular and graphical summaries of the monitoring data obtained during the previous year. Any such request shall be made in writing. The report shall discuss the compliance record. If violations have occurred, the report shall also discuss the corrective actions taken and planned to bring the discharge into full compliance with the waste discharge requirements.

4. **Notice of Intent (NOI)**. For the 5-year NOA renewal, the Discharger shall submit a written report to the Central Valley Water Board, electronically via CIWQS submittal, containing, at minimum, the following by the due date in the Technical Reports Table:
    a. Report of Waste Discharge (Form 200);
    b. NPDES Form 2S;
    c. Notice of Intent for the most current Municipal General Order
    d. Salinity Evaluation and Minimization Plan

5. **Annual Pretreatment Reporting Requirements.** The Discharger shall submit annually a report to the Central Valley Water Board, with copies to U.S. EPA Region 9 and the State Water Board (submittal requirements follow this section), describing the Discharger's pretreatment activities over the previous 12 months (1 January through 31 December). In the event that the Discharger is not in compliance with any conditions or requirements of the Municipal General Order and this NOA, including noncompliance with pretreatment audit/compliance inspection requirements, then the Discharger shall also include the reasons for noncompliance and state how and when the Discharger shall comply with such conditions and requirements.

    An annual report shall be submitted by the due date shown in the Technical Reports Table D-9 and include at least the following items:

    a. A summary of analytical results from representative sampling of the POTW's influent and effluent for those pollutants U.S. EPA has identified under section 307(a) of the CWA which are known or suspected to be discharged by nondomestic users. This will consist of an annual full priority pollutant scan. The Discharger is not required to sample and analyze for asbestos. The Discharger shall submit the results of the priority pollutant scan electronically to the Central Valley Water Board using the State Water Board’s CIWQS Program Website.

        Sludge shall be sampled during the same 24-hour period and analyzed for the same pollutants as the influent and effluent sampling and analysis. The sludge analyzed shall be a composite sample of a minimum of 12 discrete samples taken at equal time intervals over the 24-hour period. Wastewater and sludge sampling and analysis shall be performed as specified in this NOA. The Discharger shall also provide any influent, effluent or sludge monitoring data for other constituents of concern which may be causing or contributing to Interference, Pass-Through or adversely impacting sludge quality. Sampling and analysis shall be performed in

accordance with the techniques prescribed in 40 C.F.R. part 136 and amendments thereto.

b. A discussion of Upset, Interference, or Pass-Through incidents, if any, at the treatment plant, which the Discharger knows or suspects were caused by nondomestic users of the POTW. The discussion shall include the reasons why the incidents occurred, the corrective actions taken and, if known, the name and address of, the nondomestic user(s) responsible. The discussion shall also include a review of the applicable pollutant limitations to determine whether any additional limitations, or changes to existing requirements, may be necessary to prevent Pass-Through, Interference, or noncompliance with sludge disposal requirements.

c. The cumulative number of nondomestic users that the Discharger has notified regarding Baseline Monitoring Reports and the cumulative number of nondomestic user responses.

d. An updated list of the Discharger's significant industrial users (SIU's) including their names and addresses, or a list of deletions, additions and SIU name changes keyed to a previously submitted list. The Discharger shall provide a brief explanation for each change. The list shall identify the SIU's subject to federal categorical standards by specifying which set(s) of standards are applicable to each SIU. The list shall indicate which SIU's, or specific pollutants from each industry, are subject to local limitations. Local limitations that are more stringent than the federal categorical standards shall also be identified.

e. The Discharger shall characterize the compliance status through the year of record of each SIU by employing the following descriptions:

   i. complied with baseline monitoring report requirements (where applicable);
   ii. consistently achieved compliance;
   iii. inconsistently achieved compliance;
   iv. significantly violated applicable pretreatment requirements as defined by 40 C.F.R. section 403.8(f)(2)(vii);
   v. complied with schedule to achieve compliance (include the date final compliance is required);
   vi. did not achieve compliance and not on a compliance schedule; and
   vii. compliance status unknown.

f. A summary of the inspection and sampling activities conducted by the Discharger during the past year to gather information and data regarding the SIU's. The summary shall include:

   i. The names and addresses of the SIU's subjected to surveillance and an explanation of whether they were inspected, sampled, or both and the frequency of these activities at each user; and

   ii. The conclusions or results from the inspection or sampling of each industrial user.

g. The Discharger shall characterize the compliance status of each SIU by providing a list or table which includes the following information:
   i. Name of SIU;
   ii. Category, if subject to federal categorical standards;
   iii. The type of wastewater treatment or control processes in place;
   iv. The number of samples taken by the POTW during the year;
   v. The number of samples taken by the SIU during the year;
   vi. For a SIU subject to discharge requirements for total toxic organics, whether all required certifications were provided;
   vii. A list of the standards violated during the year. Identify whether the violations were for categorical standards or local limits.
   viii. Whether the facility is in significant noncompliance (SNC) as defined at 40 C.F.R. section 403.8(f)(2)(viii) at any time during the year; and
   ix. A summary of enforcement or other actions taken during the year to return the SIU to compliance. Describe the type of action (e.g., warning letters or notices of violation, administrative orders, civil actions, and criminal actions), final compliance date, and the amount of fines and penalties collected, if any. Describe any proposed actions for bringing the SIU into compliance;
   x. Restriction of flow to the POTW.
   xi. Disconnection from discharge to the POTW.

h. A brief description of any programs the POTW implements to reduce pollutants from nondomestic users that are not classified as SIU's;

i. A brief description of any significant changes in operating the pretreatment program which differ from the previous year including, but not limited to, changes concerning: the program's administrative structure, local limits, monitoring program or monitoring frequencies, legal authority, enforcement policy, funding levels, or staffing levels;

j. A summary of the annual pretreatment budget, including the cost of pretreatment program functions and equipment purchases; and

k. A summary of activities to involve and inform the public of the program including a copy of the newspaper notice, if any, required under 40 C.F.R. section 403.8(f)(2)(viii).

l. Pretreatment Program reports shall be submitted as follows:
   i. Electronically to the Central Valley Water Board using the CIWQS system or emailed as a PDF file to: RB5S-NPDES-Comments@waterboards.ca.gov; and
   ii. Emailed to the State Water Board as a PDF file to: NPDES_Wastewater@waterboards.ca.gov; and
   iii. Emailed to the U.S. EPA to: R9Pretreatment@epa.gov.

6. **Recycled Water Policy Annual Reports.** In accordance with Section 3 of the Water Quality Control Policy for Recycled Water (Recycled Water Policy) and as specified in this NOA, the Discharger shall electronically submit an annual report of monthly data to the State Water Board by 30 April annually

covering the previous calendar year using the State Water Board's GeoTracker website (https://geotracker.waterboards.ca.gov/). Information for setting up and using the GeoTracker system can be found in the ESI Guide for Responsible Parties document on the State Water Board's website for Electronic Submittal of Information (https://www.waterboards.ca.gov/ust/electronic_submittal/index.html).

The annual report to GeoTracker must include volumetric reporting of the items listed in Section 3.2 of the Recycled Water Policy (www.waterboards.ca.gov/board_decisions/adopted_orders/resolutions/2018/121118_7_final_amendment_oal.pdf). A PDF of the upload confirmation from GeoTracker for the Recycled Water Policy Annual Report shall be uploaded into CIWQS to demonstrate compliance with this reporting requirement.

7. **Technical Report Submittals.** The Municipal General Order, as specified in this NOA, includes requirements to submit various reports and documents that may include, a Notice of Intent, special study technical reports, progress reports, and other reports identified in the MRP (hereafter referred to collectively as "technical reports"). The Technical Reports Table D-9 below summarizes the technical reports that are applicable to this discharge and required by this NOA, and the due dates for each submittal. All technical reports shall be submitted electronically via CIWQS submittal. Technical reports should be uploaded as a PDF, Microsoft Word, or Microsoft Excel file attachment.

Table D-9. Technical Reports

Report Number	Technical Report	Due Date	CIWQS Report Name
1	Notice of Intent	31 July 2026	NOI
2	Analytical Methods Report	1 October 2022	MRP X.D.2
3	Annual Operations Report	1 February 2023	MRP X.D.3
4	Annual Operations Report	1 February 2024	MRP X.D.3
5	Annual Operations Report	1 February 2025	MRP X.D.3
6	Annual Operations Report	1 February 2026	MRP X.D.3
7	Annual Operations Report	1 February 2027	MRP X.D.3
8	Recycled Water Policy Annual Report Submittal Confirmation	30 April 2023	MRP X.D.5
9	Recycled Water Policy Annual Report Submittal Confirmation	30 April 2024	MRP X.D.5
10	Recycled Water Policy Annual Report Submittal Confirmation	30 April 2025	MRP X.D.5
11	Recycled Water Policy Annual Report Submittal Confirmation	30 April 2026	MRP X.D.5
12	Recycled Water Policy Annual Report Submittal Confirmation	30 April 2027	MRP X.D.5
13	Annual Pretreatment Report	1 February 2023	MRP X.D.5
14	Annual Pretreatment Report	1 February 2024	MRP X.D.5

Report Number	Technical Report	Due Date	CIWQS Report Name
15	Annual Pretreatment Report	1 February 2025	MRP X.D.5
16	Annual Pretreatment Report	1 February 2026	MRP X.D.5
17	Annual Pretreatment Report	1 February 2027	MRP X.D.5

APPENDIX E – DETERMINATION OF WATER QUALITY-BASED EFFLUENT LIMITATIONS (WQBELS)

The Central Valley Water Board determined water quality-based effluent limitations (WQBELs) as described in the Municipal General Order, section V.C.4 of the Fact Sheet (Attachment F), using the effluent limits tables included in the Municipal General Order, section V.A.1 of the Limitations and Discharge Requirements. For parameters with both human health and aquatic life objectives/criteria, the final effluent limitations in this NOA are based on the lower of the effluent limitations based on the aquatic life objectives/criteria and human health objectives/criteria.

Abbreviations and Notes:

1. CV = Coefficient of Variation (established in accordance with section 1.4 of the SIP)
2. MDEL = Maximum Daily Effluent Limitation
3. AMEL = Average Monthly Effluent Limitation
4. MDEL = Maximum Daily Effluent Limitation
5. AWEL = Average Weekly Effluent Limitation
6. CMC = Criterion Maximum Concentration
7. CCC = Criterion Continuous Concentration
8. Coefficient of Variation (CV) calculated using effluent sample data for the parameter listed.
9. Effluent Limit Table as indicated and contained in section V, Effluent Limitations and Discharge Specifications, of the Municipal General Order. Specific table listed is used to determine the appropriate AMEL, AWEL, or MDEL.

Table E-1. Human Health WQBELs Calculations

Parameter	Units	Criteria	CV	Effluent Limit Table in Municipal General Order	AMEL	AWEL
Nitrate Plus Nitrite (as N)	mg/L	10	0.2	19B	10	13

Table E-2. Aquatic Life WQBELs Calculations

Parameter	Units	CMC	CCC	CV	Effluent Limit Table in Municipal General Order	AMEL	AWEL
Ammonia, Total (as N)	mg/L	8.72	1.5	0.6	17D	1.4	3.1