PALO ALTO PARK FEASIBILITY STUDY

Final Report

July 30, 2026

Prepared for:

State Water Resources Control Board

Prepared by:

Stantec Consulting Services, Inc

Project Number:

AR 7274-A

Revision	Description	Author		Quality Check		Independent Review	
0	Draft Feasibility Report	C. Glover; A. Tharakkal; C. Poytress; J. Dorio; B. Lowry	12/19/25	D. Pernitsky	12/16/25	M. Antos	12/16/25
1	PAP Comments	C. Glover; B.Lowry; C. Adera	1/6/2026				
2	PAP Comments, DDW, and DFA Comments	C. Glover; B. Lowry; C. Adera; R. Hoang; S.Van Etten	3/13/2026	C. Poytress	6/1/26	C. Adera	7/29/26

Table of Contents

LIST OF ACRONYMS **1.1**

GLOSSARY **1.2**

1.0 EXECUTIVE SUMMARY **1.3**

2.0 BACKGROUND PROJECT INFORMATION **2.1**
2.1 EXISTING FACILITIES DESCRIPTION 2.1
2.1.1 Water System Description 2.1
2.1.2 Water Quality in Wells #5, #6 and #7 ..... 2.5
2.1.3 San Mateo Plain Groundwater Basin 2.7
2.2 CURRENT AND PAST COMPLIANCES ISSUES 2.7

3.0 PROBLEM DESCRIPTION **3.9**

4.0 DATA REVIEW **4.10**
4.1 CONDITION OF WELLS #5, #6, AND #7 ..... 4.10
4.1.1 Well #5 ..... 4.10
4.1.2 Well #6 ..... 4.10
4.1.3 Well #7 ..... 4.11
4.2 WATER QUALITY SAMPLING RESULTS 4.11
4.3 BLENDING ANALYSIS 4.12
4.4 LISTENING SESSIONS 4.13

5.0 ALTERNATIVES ANALYSIS **5.16**
5.1 ALTERNATIVE 1- TREATMENT AND NEW WELL AT PAPMWC 5.16
5.1.1 Description 5.16
5.1.2 Construction of a New Well 5.16
5.1.3 Manganese Treatment 5.17
5.1.3.1 Design Criteria for Iron/Manganese Treatment 5.18
5.1.4 Backwash Water Management 5.22
5.1.5 Hydraulic Calculations 5.23
5.1.6 Impact of Treatment on Distribution System 5.25
5.1.7 Environmental Impacts 5.26
5.1.8 Land Requirements 5.26
5.1.9 Construction and Site Considerations 5.27
5.1.10 Cost Estimate 5.28
5.1.11 Advantages and Disadvantages 5.29
5.2 ALTERNATIVE 2A- PHYSICAL CONSOLIDATION 5.30
5.2.1 Description 5.30
5.2.2 Distribution System Connection Design Criteria 5.33
5.2.3 Pipeline to Tank Design Criteria 5.39
5.2.4 Environmental Impacts 5.40
5.2.5 Land Requirements 5.40
5.2.6 Construction and Site Considerations 5.40

5.2.7 Cost Estimate....5.41
5.2.8 Advantages and Disadvantages....5.43
5.3 ALTERNATIVE 2B INTERIE OR INTERCONNECTION....5.44
5.3.1 Description....5.44
5.3.2 Intertie or Interconnection Design Criteria....5.45
5.3.3 Environmental Impacts....5.45
5.3.4 Land Requirements....5.45
5.3.5 Construction and Site Considerations....5.45
5.3.6 Cost Estimate....5.45
5.3.7 Advantages and Disadvantages....5.46

6.0 REVENUE SUFFICIENCY ANALYSIS....6.1
6.1 OBJECTIVES....6.1
6.2 ANALYSIS METHODOLOGY....6.1
6.2.1 Financial Revenue Sufficiency Analysis....6.1
6.3 FINANCIAL PLAN....6.2
6.3.1 Data & Assumptions....6.2
6.3.2 Beginning Fund Balance....6.2
6.3.3 Rate Revenues....6.2
6.3.4 Non-Rate Revenues....6.2
6.3.4.1 Interest Earnings on Invested Funds....6.3
6.3.5 Existing Loan Debt Payments....6.3
6.3.6 Expenses....6.3
6.3.7 Cost Escalation....6.3
6.3.8 Reserve Targets....6.4
6.3.9 Borrowing Terms....6.4
6.3.10 Scenario Analysis....6.5
6.3.11 Alternative 1 – Scenario 1: Partial Bond Financing for Well #7....6.5
6.3.12 Alternative 1 - Scenario 2: Partial Bond Financing for the Full-System Capacity....6.5
6.3.13 Alternative 2B (Option 1) - Scenario 1: Partial Bond Financing for the Point of Connection with Booster Pump....6.6
6.3.14 Alternative 2B (Option 2) - Scenario 2: Partial Bond Financing for the Pipeline to Tank....6.6
6.3.14.1 Alternative 2B (Option 2) – Scenario 2B: Revenue Funding for the Pipeline to Tank....6.7
6.3.15 Water Bill Affordability....6.7

7.0 ALTERNATIVES COMPARISON....7.1
7.1 RECOMMENDATIONS FOR COMMUNITY OUTREACH AND EDUCATION....7.1

8.0 REFERENCES....8.2

APPENDIX A PAPMWC PILOT STUDY....A.1

APPENDIX B PAPMWC MODEL RESULTS....B.1

APPENDIX C PROBABLE OPINION OF COST FOR ALTERNATIVES 2A AND 2B (OPTION 1)– POCS WITH PUMPS C.1

APPENDIX D PROBABLE OPINION OF COST FOR ALTERNATIVES 2A AND 2B (OPTION 2) – PIPELINE TO TANK D.1

APPENDIX E ALTERNATIVE 1 – FINANCIAL ANALYSIS FOR WELL #7 ..... E.1

APPENDIX F ALTERNATIVE 1 – FINANCIAL ANALYSIS FOR THE FULL-SYSTEM CAPACITY F.1

APPENDIX G ALTERNATIVE 2B – FINANCIAL ANALYSIS FOR THE POINT OF CONNECTION WITH BOOSTER PUMPS G.1

APPENDIX H ALTERNATIVE 2B – FINANCIAL ANALYSIS FOR THE PIPELINE TO TANK H.1

APPENDIX I ALTERNATIVE 2B – FINANCIAL ANALYSIS FOR REVENUE FUNDING OF PIPELINE TO TANK I.1

LIST OF TABLES

Table 1-1. Comparison of Alternatives 1, 2A, and 2B 1.1
Table 2-1. Overview of details on Wells #5, #6, and #7. ..... 2.1
Table 2-2. Overview of Distribution System Piping Characteristics. 2.5
Table 2-3. Concentrations of Iron, Manganese, and Aluminum in Wells #5, #6, and #7. ..... 2.6
Table 4-1. Results from start-up testing for total and dissolved iron, manganese, and aluminum in Well #7. ..... 4.12
Table 4-2. Median, 95th percentile, and maximum manganese concentrations for Wells #5, #6, and #7. ..... 4.13
Table 4-3. Blended Manganese concentrations in Scenario 1 ..... 4.13
Table 5-1. New Well Design and Cost Estimate from Maggiora Bros. Drilling, Inc. 5.17
Table 5-2. Design parameters for ATEC iron/manganese treatment. 5.19
Table 5-3. Design parameters for Yardney iron/manganese treatment. 5.19
Table 5-4. Design parameters for Chart iron/manganese treatment. 5.20
Table 5-5. Equipment costs from three vendors for Well #7 treatment or full-system flow. 5.21
Table 5-6. O&M Costs Associated with Treatment 5.21
Table 5-7. Backwash recycle system parameters and disposal costs. 5.23
Table 5-8. Hydraulic considerations for Iron/Manganese Treatment. 5.24
Table 5-9. Capital and O&M for Alternative 1 ..... 5.28
Table 5-10. Advantages and disadvantages of Alternative 1. ..... 5.30
Table 5-11. Modeled Pipe Material Friction Factors. 5.34
Table 5-12. Model results 5.36
Table 5-13. POCs and booster pump components. 5.39
Table 5-14. Pipeline components. 5.40
Table 5-15. Cost Estimate for Alternative 2A (Option 1) – POCs with Booster Pumps 5.41

Table 5-16. Cost Estimate for Alternative 2A (Option 2) – Pipeline to Tank.....5.42
Table 5-17. Advantages and Disadvantages of Alternative 2A. 5.43
Table 5-18. Cost Estimate for Alternative 2B- Interties or Interconnections. 5.45
Table 5-17. Advantages and Disadvantages of Alternative 2B- Interties or Interconnections. 5.46
Table 6-1. O&M Cost Escalation Factors 6.3
Table 6-2. Recommended Water Rate Revenue Increase for the Well #7 Project.....6.5
Table 6-3. Recommended Water Rate Revenue Increase for the Full-System Capacity Project 6.6
Table 6-4. Recommended Water Rate Revenue Increase for the POCs with Booster Pump 6.6
Table 6-5. Recommended Water Rate Revenue Increase for the Pipeline to Tank 6.7
Table 6-6. Recommended Water Rate Revenue Increase for the Pipeline to Tank (Cash Funded) 6.7
Table 6-7. PAPMWC Affordability Data (Based on FY 2027-28 Rate Revenue Adjustment) 6.8
Table 7-1. Summary of Alternatives. 7.1
Table 7-2. Anticipated Cost of Alternatives.....7.2

LIST OF FIGURES

Figure 2.1. System overview including the active (#5, #6, and #7), proposed well (#3R), inactive Well #3 and storage tanks. 2.2
Figure 2.2. PAPMWC site map including piping and valves. Figure from PAPMWC. 2.3
Figure 2.3. Distribution system for PAPMWC including highlighted areas showing the replacement of cast iron piping by PVC following the 1989 earthquake. Figure from PAPMWC. 2.4
Figure 5.1. Treatment of dissolved manganese via pre-oxidation and filtration. 5.18
Figure 5.2 Pathways for Mn Buildup and Particle Release from Pipe Scale 5.25
Figure 5.3. Proposed iron/manganese treatment location at PAPMWC. 5.27
Figure 5.4. Distribution system POC locations. 5.34
Figure 5.5. Existing intertie between the City of East Palo Alto and PAPMWC. 5.35
Figure 5.6. Example plan view for the POC booster pump station. 5.38
Figure 5.7. Example section for the POC booster pump station. 5.38

LIST OF ACRONYMS

AWWA | American Water Works Association
CCR | California Code of Regulations
BAWSCA | Bay Area Water Supply & Conservation Agency
BGS | Below Ground Surface
CEQA | California Environmental Quality Act
CI | Cast Iron
DDW | Division of Drinking Water
DI | Ductile Iron
FAMS | Financial Analysis and Management System
FF | Fire Flow
GPM | Gallons Per Minute
ISG | Individual Supply Guarantee
HDPE | High-Density Polyethylene
MCL | Maximum Contaminant Level
MDD | Maximum Day Demand
MDD + FF | Maximum Day Demand plus Fire Flow
MWC | Mutual Water Company
O&M | Operations and Maintenance
PAPMWC | Palo Alto Park Mutual Water Company
POC | Point of Connection
PVC | Polyvinyl Chloride
RSA | Revenue Sufficiency Analysis
SAFER | Safe and Affordable Funding for Equity and Resilience
SFPUC | San Francisco Public Utilities Commission
SMCL | Secondary Maximum Contaminant Level
SWRCB | State Water Resources Control Board

GLOSSARY

Intertie or Interconnection

An intertie or interconnection is a physical connection between two distinct water systems which allows the passage of water between two or more water systems. Each water system retains full technical, operational, legal, financial, and managerial control over all components and functions of their respective water systems. These configurations should be accompanied by robust legal agreements or contracts which outline the nature, use, and duration of the connection. An intertie or interconnection is distinct from physical consolidation and typically includes a meter for billing purposes.

Physical Consolidation

Physical consolidation refers to the joining of two or more water systems with a physical connection, which commonly includes a smaller system being subsumed into a larger water system. When a physical consolidation occurs, the smaller water system is dissolved, and its customers are provided water service and billing by the larger receiving water system. The combined water systems operate under one domestic water supply permit to form a single public water system, and the subsumed water system ceases to exist. Execution of physical consolidation also includes the dissolution/annexation LAFCo process.

1.0 EXECUTIVE SUMMARY

Palo Alto Park Mutual Water Company (PAPMWC) is a private non-profit, organized as a Nonprofit Mutual Benefit Corporation. PAPMWC serves approximately 2,900 residents in the City of East Palo Alto and Menlo Park. Until 2022, the community that PAPMWC serves was classified as a Severely Disadvantaged Community, but it is now classified as a Non-Disadvantaged Community (SAFER, 2025).

PAPMWC is currently under a Compliance Order (No. 02_17_24J_005; issued 05/23/2024) for failing to meet their storage and maximum day demand requirements (CCR Title 22 §64554; CCR Title 22 §64554(a)). PAPMWC has three active wells, Well #5, Well #6, and Well #7. Well #7 contains manganese, iron, and aluminum concentrations above the Secondary Maximum Contaminant Level (SMCL). SMCLs are non-health-based standards established to address water quality and aesthetic concerns such as taste, color, and odor. While SMCL exceedances do not indicate an immediate health risk, elevated manganese may result in noticeable water quality issues that can affect customer confidence and use of the water supply. Historically, PAPMWC met requirements for their system by blending water from the three wells to meet the SMCL. However, blending is no longer a viable treatment solution due to the reduced capacity of Wells #5 and #6 and the presence of a leaking or open valve that prevents blending in the storage tank. As a result, Well #7 has been taken offline and PAPMWC has been unable to meet their storage and maximum day demand requirements.

Stantec was referred as a Technical Assistance (TA) Provider to conduct a Feasibility Study evaluating two alternatives to increase system capacity and resolve the current compliance order for PAPMWC. The two alternatives are:

- Alternative 1: Provide treatment for PAPMWC and a new well
- Alternative 2: Receive water from the City of East Palo Alto
    - 2A: Physical Consolidation with the City of East Palo Alto
        - Option 1: Point of Connection with Booster Pumps
        - Option 2: Pipeline to Tank
    - 2B: Intertie or interconnection with the City of East Palo Alto
        - Option 1: Point of Connection with Booster Pumps
        - Option 2: Pipeline to Tank

The two alternatives were compared based on their costs as well as the advantages and disadvantages associated with implementation. A summary of the primary advantages and disadvantages can be found in Table 1-1.

Under Alternative 1, two cost estimates were generated. The first cost estimate includes treatment for Well #7 and a new well, while the second includes the treatment for the full system flow and a new well. Treatment for Well #7 was needed due to the occurrence of dissolved manganese. The iron and aluminum were found to occur as particulate phase at well start-up and as a result they can be managed through a 15-minute flush during well start-up. The decision on sizing of the treatment equipment will depend on the water quality of the newly developed well.

Under Alternatives 2A and 2B, the cost includes the infrastructure to physically connect PAPMWC to the City of East Palo Alto – either via two interties to the distribution system or a pipeline to the existing storage tanks. Alternative 2A and 2B also includes the anticipated cost of studies to evaluate the available capacity from the City of East Palo Alto, an assessment of the impacts on water quality in the distribution system, further development including calibration of the hydraulic model, and an affordability study. The water capacity is provided from San Francisco Public Utilities Commission (SFPUC) to the City of East Palo Alto through their Water Supply Agreement with the County of San Francsico and Wholesale Customers. Neither Alternative 2A or 2B include costs for obtaining additional source capacity from SFPUC and Alternative 2A does not account for the potential value of the existing PAPMWC assets.

To evaluate the increase in water rates needed to accommodate Alternatives 1 and 2B, a Revenue Sufficiency Analysis (RSA) was completed. The RSA evaluated the long-term financial feasibility of the two Alternatives presented in the Feasibility Study. Using a 10-year financial management model, the analysis assessed operating costs, debt obligations, reserve requirements, and capital financing needs to determine the required water rate revenue adjustments corresponding to each of the alternatives.

Table 1-1. Comparison of Alternatives 1, 2A, and 2B

Alternative	What it involves	Primary benefit	Key Considerations	Estimated cost	Annual Operation and Maintenance	Customer Cost Impact
1 – New Well & Treatment	Treat Well #7 (or full system) and add a new well	Keeps PAPMWC independent and provides water that meets water quality standards	Significant investment in Well #7 and may have additional infrastructure needs	$2,011,000 (Well #7 treatment + new well) $2,734,000 (Full system treatment + new well)	$43,000 (Well #7) or $70,000 (full system treatment)	Estimated Increase of 20% (Well #7) or 30% (full system treatment)
2A – Physical Consolidation with the City of East Palo Alto	Connect PAPMWC to the City of East Palo Alto via pipeline/ interties	May improve economies of scale and support utility management	Depends on the City of East Palo Alto's capacity to supply water to PAPMWC; does not include potential value of PAPMWC assets	$1,202,000 (Interties + studies) $1,459,000 (Pipeline + studies)	Assumed to be included in the City of East Palo Alto water rates	Alternative was not analyzed at this time
2B – Intertie or Interconnection	Similar connection to the City East Palo Alto, but PAPMWC remains an entity	Provides water that meets water quality standards	Depends on the City of East Palo Alto's available water capacity; does not include cost of obtaining additional water	$1,202,000 (Interties + studies) $1,459,000 (Pipeline + studies)	Assumed to be $1,200,000	Estimated Increase of 143% Intertie or Pipeline) or 147% (Pipeline is Cash Funded)

2.0 Background Project Information

2.1 EXISTING FACILITIES DESCRIPTION

Palo Alto Park Mutual Water Company (PAPMWC) is a private non-profit organization organized as a Nonprofit Mutual Benefit Corporation (Public Water System Identification number CA4110020) in San Mateo County. PAPMWC serves approximately 2,900 residents via 692 service connections (687 residential and 5 commercial) in City of East Palo Alto and Menlo Park. The area served by PAPMWC is currently classified as a non-disadvantaged community with a median household income of $96,378. In 2022, PAPMWC served a community that was classified as a Severely Disadvantaged Community, or one where the median household income was less than 60% of the Statewide annual median household income (Water Code §79505.5). Currently, the system is classified as Failing under the Safe and Affordable Funding for Equity and Resilience (SAFER) Dashboard (SAFER, 2025).

2.1.1 Water System Description

PAPMWC has three active wells (Well #5, Well #6, and Well #7) and two inactive or destroyed wells (Well #2, and Well #3). Wells #2 and #3 are permanently offline, though there are plans for the construction of a replacement well for Well #3, Well #3R. Well #7 is currently offline due to water quality issues. Detailed information on the active wells is shown in Table 2-1. Wells #5 and #6 are significantly older and shallower than Well #7. In 2023, the pumps for Wells #5 and #6 were replaced and a liner was added to Well #6 to fix a crack in the casing at 212 ft. The submersible pump that was installed in Well #5 provides significantly less capacity (77 gallons per minute (gpm)) relative to the previous pump (300 gpm).

Table 2-1. Overview of details on Wells #5, #6, and #7.

Parameter	Well #5	Well #6	Well #7
Year Drilled	1950	1953	1990
Casing diameter (inches)	10	10	8
Casing and screen	Stovepipe, slotted	Stovepipe, slotted	Steel
Depth (feet below ground surface)	280	250	484
Pumping capacity (gpm)	300	350	400
Current pumping capacity (gpm)	77	260	300*

*Well 7's current pumping capacity is 350 gpm, but based on discussions with PAPMWC staff, the staff throttles a valve to limit the discharge to 300 gpm.

The system has total storage of 361,500 gallons, provided by two water tanks with volumes of 350,000 gallons and 11,500 gallons (Figure 2.1). Flow from the three operational wells (Well #5, #6, and #7) is chlorinated ahead of the larger storage tank. Blending of the three wells can occur in the storage tanks. After the storage tank, chlorine levels are increased and then the water is sent into the distribution system by two booster pumps. The goal is to provide a residual of 0.5 mg/L in the distribution system. Chlorine is dosed to sufficiently overcome the oxidation of the iron and manganese in the water. The chlorine level is monitored downstream of the booster pump by an online meter.

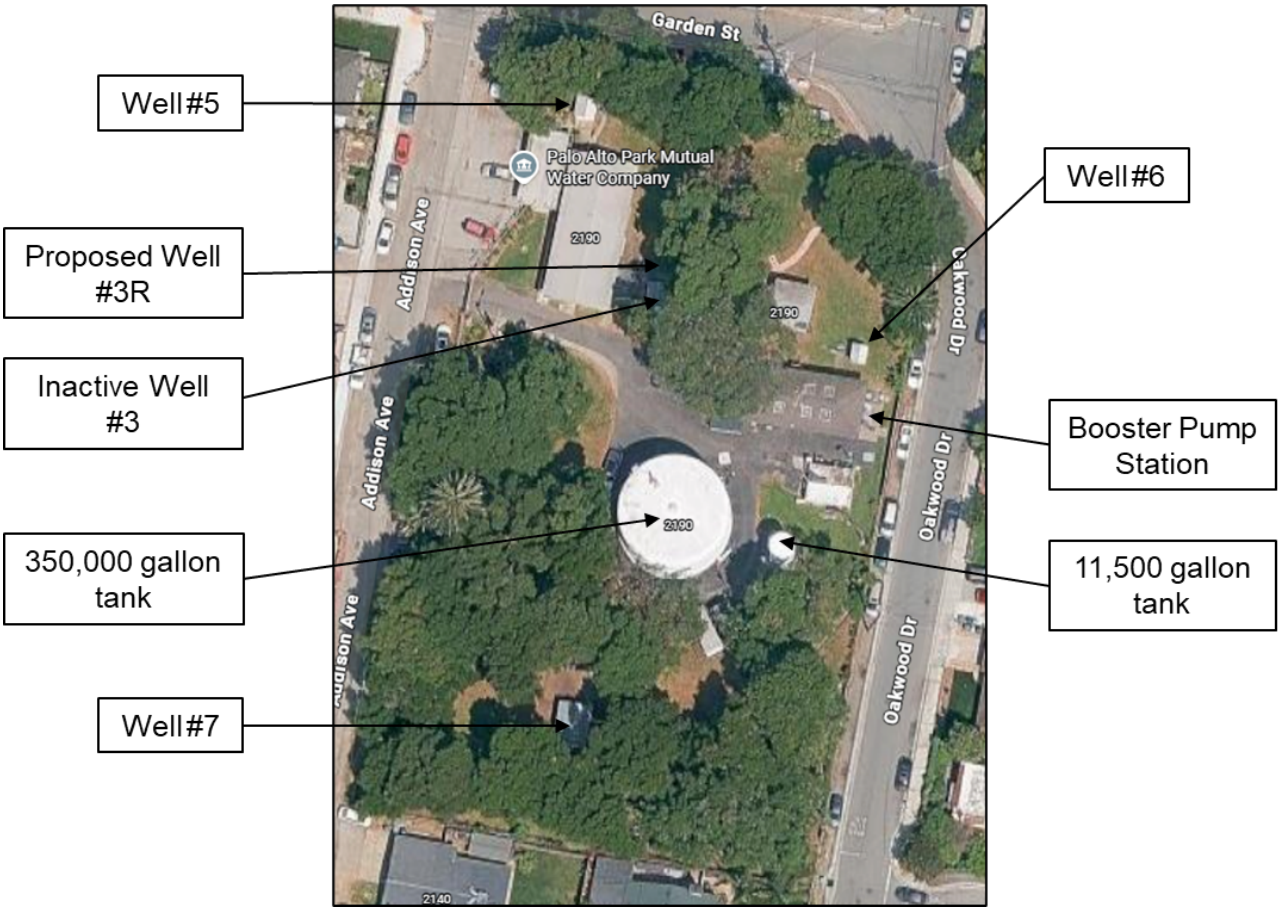

Figure 2.1. System overview including the active (#5, #6, and #7), proposed well (#3R), inactive Well #3 and storage tanks.

Currently, there is a valve ahead of the 350,000 gallon storage tank that is open or leaking. As a result of this valve position, there is the potential for water from Wells #5 and #6 to bypass storage, flow to the booster pumps, and enter into the distribution system (Figure 2.2). From 2007–2019, Well #7 was permitted for use based on specific blending conditions to ensure that the iron, manganese, and aluminum levels were below their Secondary Maximum Contaminant Levels (SMCL). These specific

blending conditions included combined flow with Wells #5 and #6 or with Well #6 based on flow capacity of 340 gpm for Well #5 and 325 gpm for Well #6. However, the current reduced capacity of Wells #5 and #6 and the open position of the valve has rendered the blending conditions unknown (per Operating Conditions for Well #7 from Division of Drinking Water or DDW; May 10, 2024). As a result, Well #7 has been taken offline.

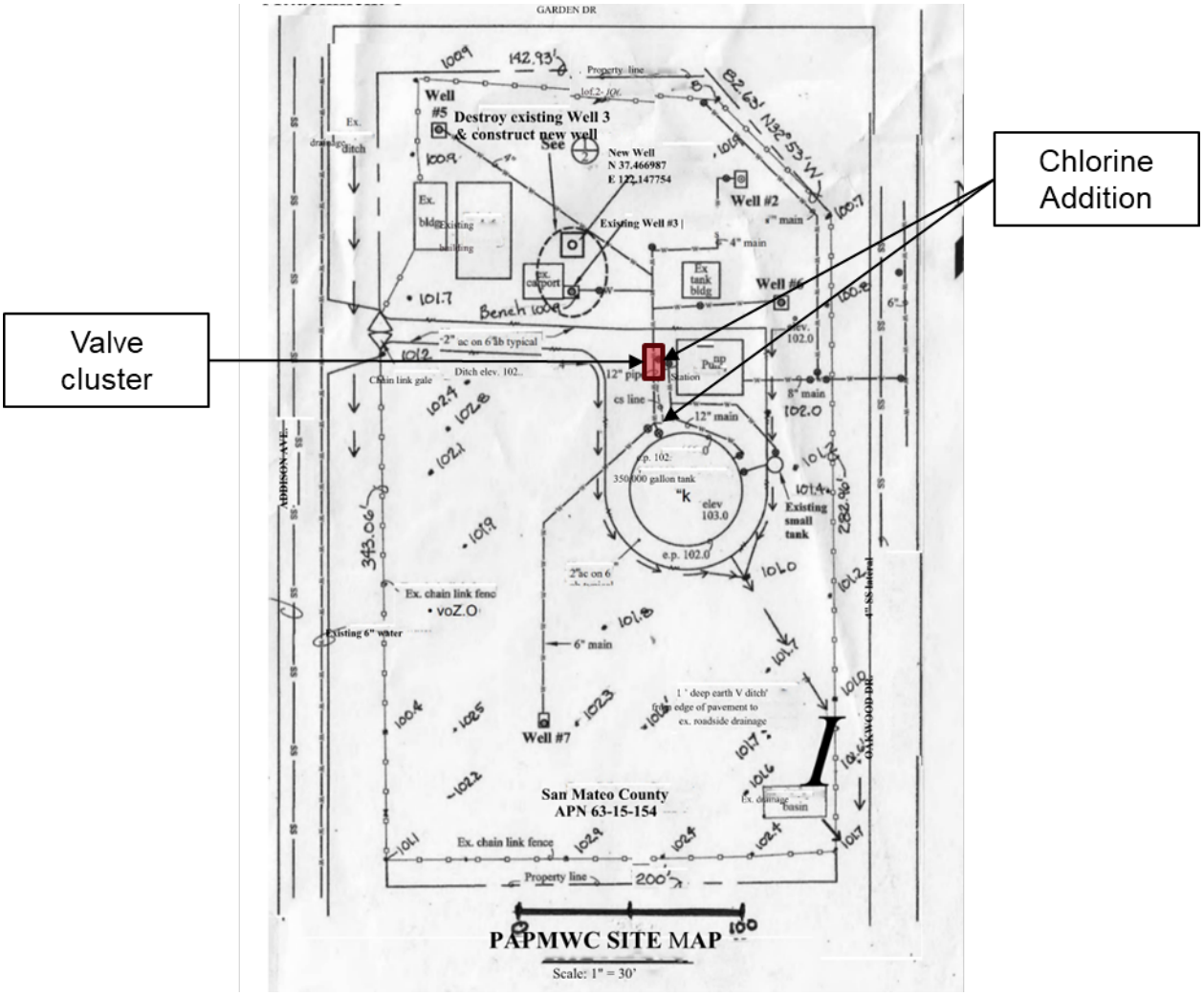

Figure 2.2. PAPMWC site map including piping and valves. Figure from PAPMWC.

The PAPMWC distribution system serves the City of East Palo Alto and Menlo Park with the majority of the homes located in the City of East Palo Alto (Figure 2.3). The distribution network is unmetered except for 5 commercial accounts and approximately 48 accounts which have had the construction of new service line replacements (out of 687 total service connections). PAPMWC is classified as a T1 treatment facility and a D2 distribution system. The maximum daily demand (MDD) of the system is 593,000 gallons

as determined from data collected between 2017 and 2024. In 2024, the average day demand was 262,875 gallons and the yearly usage was 95,949,383 gallons.

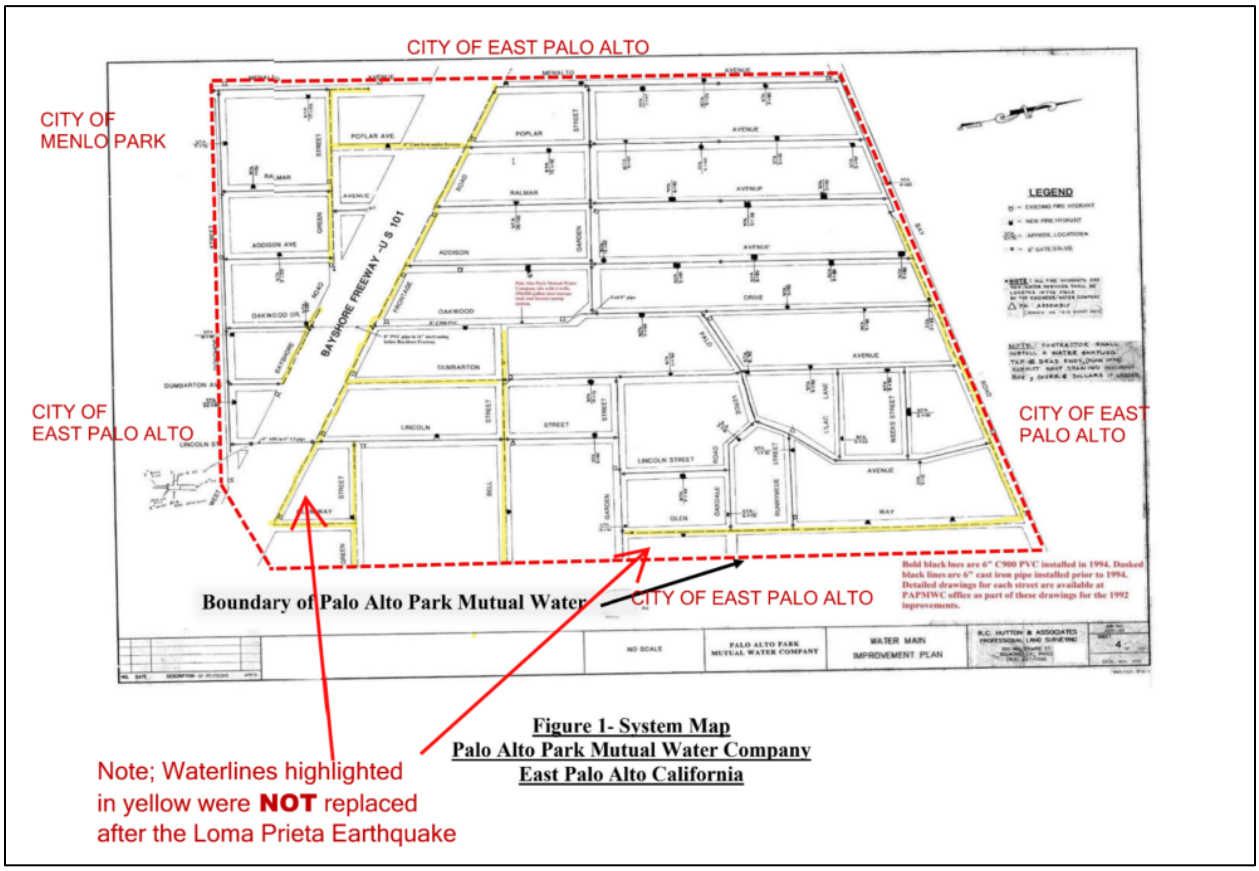

Figure 2.3. Distribution system for PAPMWC including highlighted areas showing the replacement of cast iron piping by PVC following the 1989 earthquake. Figure from PAPMWC.

The distribution network consists primarily of 6- and 8-inch water mains that are either cast iron (CI) or polyvinyl chloride (PVC). The PVC lines were installed following the 1989 Loma Prieta earthquake. There is one water main with a 4-inch high density polyethylene pipe (HDPE) located within an existing 6-in CI pipe and one 8-inch ductile iron (DI) pipe in a 12-inch CI pipe. See Table 2-2 for a summary of the distribution network piping characteristics.

Table 2-2 is based on available as-built drawings, mapping, and records. Exact pipe pressure ratings are unknown and have been assumed based on historical AWWA standards applicable at the time of installation.

- **PVC Pipe:** PVC water mains are assumed to have been installed in 1994 and to conform to ANSI/AWWA C900-89, which specified pressure classes of 100, 150, and 200 psi. Class 150 psi was the most common municipal installation during this period; however, lower or higher classes may have been used depending on system design criteria.

- **Gray Cast Iron Pipe:** Gray cast iron water mains are assumed to predate 1994 and to conform to ANSI/AWWA C100 (ANSI A21.1), which classified pipe as Class A through Class D, with nominal working pressures ranging from approximately 100, 130, 150, and 170 psi, respectively.
- **HDPE Pipe:** HDPE pipe is assumed to have been installed in 1994 and to conform to AWWA C901 and/or ASTM D3035. HDPE pipe is pressure-rated by dimension ratio (DR). Common DRs used during this period include DR17 (100 psi), DR13.5 (125 psi), and DR11 (160 psi). The exact DR of the installed pipe is unknown.
- **Ductile Iron Pipe:** Ductile iron water mains are assumed to have been installed in 1994 and to conform to ANSI/AWWA C151 (ANSI A21.51). Ductile iron pipe is pressure-rated by Pressure Class. Common pressure classes for 8-inch municipal water mains during this period include 150 psi and 200 psi, with higher classes used where system pressures required.

Table 2-2. Overview of Distribution System Piping Characteristics

Size	Material	Age (years)	Assumed Pressure Rating (psi)
4-inch	HDPE	32	100-160
6-inch	PVC	32	100-200
6-inch	Gray Cast Iron	Unknown	100-170
8-inch	PVC	32	100-200
8-inch	Ductile Iron	32	150-250

2.1.2 Water Quality in Wells #5, #6 and #7

A summary of the water quality data shown in Table 2-3 highlights the occurrence of iron, manganese, and aluminum in data collected from 2011 – 2024. These three metals have been reported above a Secondary Maximum Contaminant Level (SMCL) in Well #7. As a community water system in California, PAPMWC must comply with all SMCLs. Wells #5 and #6 have not shown any exceedances of the SMCL. The system does not have other MCL or SMCL exceedances.

Table 2-3. Concentrations of Iron, Manganese, and Aluminum in Wells #5, #6, and #7.

Well	Unit	Iron (mg/L)	Manganese (mg/L)	Aluminum (mg/L)
Well #5	Range (Count)	< 0.10 – 0.021 (n = 10)	< 0.02 (n = 10)	< 0.050 – 0.073 (n = 6)
Well #6	Range (Count)	< 0.10 mg/L (n = 10)	< 0.02 – 0.027 (n = 10)	< 0.050 (n = 7)
Well #7	Range Median (Count)	< 0.10 – **4.2** 0.10 (n = 204)	< 0.02 – 0.260 **0.062** (n = 204)	< 0.050 – **1.9** 0.170 (n = 148)
SMCL	-	0.30	0.050	1.0

***Bolded** values are above the SMLC

Background on these water quality contaminants is provided below.

Iron (Fe). Iron in groundwater is typically present as soluble, colorless Fe^{2+} and is widespread in U.S. aquifers, with typical well concentrations of 0.5–10 mg/L and values up to 50 mg/L in some formations. It is not considered a health hazard at typical drinking-water concentrations but has notable indirect effects. It causes aesthetic issues (taste, odor, and reddish-brown staining on fixtures and laundry) and supports growth of iron bacteria, which can lead to slime buildup and operational/system issues (AWWA 2015).

Manganese (Mn). Manganese is present in most wells as soluble, colorless Mn^{2+}; it can also appear as particulate/colloidal/oxidized forms or manganese dioxide (MnO_2), a dark brown/black solid. It is widespread in U.S. groundwaters, with a median well concentration of 0.01 mg/L and is detected in ~70% of supply wells. Mn is mobilized under reducing conditions and often accumulates in well screens and aquifer deposits.

At the relatively low concentrations observed in the PAPMWC wells, Mn is primarily an aesthetic concern, rather than a direct health concern. Indirect impacts associated with elevated Mn include black spots on plumbing fixtures and clothing, accumulation and coating of service lines, increased biofilm growth, hindering lead/copper scale formation, and accumulation/oxidation of other contaminants (AWWA 2015). To address these non-health related impacts, the State has established a SMCL of 0.05 mg/L.

While an essential nutrient, exposure to high concentrations of Mn (higher than levels seen in PAPMWC wells) can cause health effects. In children, high concentrations of Mn have been linked to lower intelligence quotient and reduced memory/learning; in adults, long-term exposure is linked to neurological symptoms (similar to Parkinson's disease).

Aluminum (Al). Aluminum commonly occurs in groundwater as Al^{3+} under acidic conditions or as $Al(OH)_4^-$ under neutral to basic conditions, but it has limited solubility at drinking-water pH, and so is often found as a particle in groundwaters. It is not considered a health hazard at typical drinking-water levels. Indirectly, aluminum contributes to aesthetic issues, coats service lines, and accumulates other contaminants, affecting distribution-system water quality.

2.1.3 San Mateo Plain Groundwater Basin

All three of the active PAPMWC wells draw from the San Mateo Plain Groundwater Basin. Groundwater wells in the basin contain levels of total dissolved solids (TDS), iron, and manganese above the California SMCL (County of San Mateo, 2018). Iron and manganese have been detected in almost all the groundwater wells in the basin with shallower wells, < 50 ft below ground surface (bsg), more frequently reporting higher levels. This trend is in contrast to the data observed at PAPMWC where the water in the deepest well (484 ft bsg, Well #7) contains the highest levels of iron and manganese.

The water quality in the basin has remained fairly consistent over the past 30 years, with no indication of degradation. This basin-wide data highlights the need for treatment of drinking water supplies drawn from this aquifer and indicates that these water quality issues are not limited to PAPMWC.

2.2 Current and Past Compliances Issues

PAPWMC has had challenges with exceedances of the SMCL for aluminum, iron, and manganese and other water quality parameters/monitoring violations. Currently, PAPMWC is under a compliance order (No. 02_17_24J_005; issued 05/23/2024) for a failure to provide adequate source and storage capacity to meet the Maximum Day Demand (MDD) of the system. This compliance order was issued due to the reduced production from Well #5 and #6 and the loss of Well #7 due to water quality issues. The current capacity from Wells #5 and #6 is 485,280 gallons when both are operated 24-hours per day, which is below the MDD of 593,000 gallons. Further, there is concern regarding the longevity of these two wells as both wells have recently required casing repairs.

Current and Previous compliance orders:

- Violation of Waterworks Standard (storage capacity) (Issued 05/23/2024; Not yet resolved)
- SMCL violation for Aluminum (Issued 8/22/2018; Compliance achieved: 07/28/2022)
- State Monitoring Violation for Aluminum (Issued: 06/18/2018; Compliance achieved: 07/28/2022)
- Violation of Permit Condition for Iron (Issued 03/05/2018; Compliance achieved: 04/09/2018)
- Violation of Permit Condition for Iron (Issued 06/15/2016; Compliance achieved: 07/15/2019)
- SMCL violation for Manganese (Issued 10/23/2014; Compliance achieved: 07/15/2019)
- SMCL violation for Manganese (Issued 01/24/2014; Compliance achieved: 07/15/2019)
- State Primary MCL violation for Manganese (Issued 02/13/2009; Compliance achieved: 02/27/2018)
- State monitoring violation for 1,2,3-Trichloropropane (Issued 05/23/2018; Compliance achieved 09/21/2018)
- Total Coliform Rule MCL violation (Issued 08/13/2015; Compliance achieved 08/09/2021)
- Monitoring violation for Total Coliform Rule (Issued 08/28/2001; Compliance achieved: 08/31/2001)

Apart from the compliance orders, PAPMWC did undergo a Sanitary Survey in 2023. During the Sanitary Survey, several issues were identified including:

- Water Systems Operation Plan: Issues associated with free chlorine residual logging and residual level leaving storage
- Source capacity assessment: Issues associated with long-term source capacity planning
- Tank issues: Watertight gasket missing for 350,000-gallon tank and screen missing for 11,500-gallon tank
- Well supply: modify the flow meter to meet lower flow capacity from submersible pump installed on Well #5
- Bacteriological Sample Siting Plan: submit a revised sampling plan
- Work towards obtaining all customers' emails or phone numbers to update them more rapidly in case of an emergency

All of the items in the Sanitary Survey have been resolved with the exception of the source capacity for the system, free chlorine residual logging, and the phone or email contact information for all customers.

3.0 Problem Description

The State Water Resources Control Board (SWRCB) regulations state that “at all times a public water system’s source(s) shall have the capacity to meet the system’s MDD” and that for systems with fewer than 1,000 service connections “the system shall have storage capacity equal to or greater than the MDD, unless the system can demonstrate that it has an additional source of supply or has an emergency source connection that can meet the MDD requirement” (CCR Title 22 §64554(a)). Currently, PAPMWC is unable to meet their MDD as a result of the reduced capacity from Wells #5 and #6, Well #7 being offline due to water quality issues, and inadequate storage. Additional sources and treatment are needed to supplement Wells #5 and #6 to meet the MDD and resolve the Compliance Order (No. 02_17_24J_005; issued 05/23/2024).

To address the capacity issue at PAPMWC, this Feasibility Study evaluated two alternatives:

- Alternative 1: Provide treatment for PAPMWC and a new well
- Alternative 2: Receive Water from the City of East Palo Alto
    - 2A: Physical Consolidation with the City of East Palo Alto
    - 2B: Intertie or interconnection with the City of East Palo Alto

4.0 DATA REVIEW

The data review for PAPMWC included a desktop evaluation of the condition and capacity of Wells #5, #6, and #7, a review of storage and capacity needs, the collection of additional water quality samples to support treatment design, and a blending analysis.

Apart from data collected at the system, community engagement was also undertaken through virtual listening sessions with key stakeholders including the City of East Palo Alto, Menlo Park, O'Connor Tract Cooperative Water Company, and community groups. The goal of these sessions was to gather information about the needs and experiences of the stakeholders to inform the alternatives analysis.

4.1 CONDITION OF WELLS #5, #6, AND #7

4.1.1 Well #5

Well #5 was constructed in 1950 out of 10-inch diameter steel casing and well screen to a depth of 280 feet below ground surface (bgs). A 1993 video survey of the well found that the static depth to water was 46 feet bgs and indicated that it was perforated (screened) from 218- 276 feet bgs, with anywhere from light to moderate encrustations that may, if found in sufficient quantity, restrict groundwater flow to the well. There were also two casing failures noted in the video report, identified as compression breaks, one at 204 and the other at 265 feet bgs. Furthermore, the well was originally equipped with a pump capable of providing 300 gpm of flow but was replaced with a lower capacity submersible pump in 2023. The reason for selecting a replacement pump with reduced capacity was to prevent further damage to the compromised well casing. Based on review of available information for this well, Well #5 has reached the end of its serviceable life for a steel cased well, represented by its age, condition (casing failures) and constructed materials.

4.1.2 Well #6

Well #6 was constructed in 1953 out of 10-inch diameter steel casing and well screen to a depth of 251 feet bgs. According to the Water Well Drillers Report, Well #6 is perforated with intervals from 188 to 195, 218 to 232, and 247 to 251 feet bgs. The 1993 video log found the static depth to water to be 36 feet bgs and indicated that the well had heavy organic encrustations on the well screen. These heavy encrustations can restrict groundwater flow to the well and cause increased drawdown during pumping. The video survey also found that the casing had partially collapsed (compressed ovals) between 214 and 220 feet bgs. Well casing strength becomes significantly compromised when compressed and made more elliptical, which may be further exacerbated by excessive drawdown during pumping. The 2023 Source Planning Capacity Study noted that a repair to the casing was made in this well and it is now operating at a reduced capacity (260 gpm) to prevent further damage. Based on review of available information, Well #6 is near or has reached the end of its serviceable life, most notably due to its age, condition (collapsed intervals), and constructed materials.

4.1.3 Well #7

Well #7 was constructed in 1990 out of 8-inch diameter steel casing installed in a 24-inch borehole to a depth of 460 feet. According to the Water Well Drillers Report the well has screen intervals from 248 to 260, 290 to 300, 340 to 366, 378 to 388, and 424 to 440 feet bgs. The well has a gravel pack from 150 to 470 feet bgs and a cement sanitary seal that extends from ground surface to 150 feet. The well has a throttle flow of 300 gpm (down from 350 gpm). Well #7 is on standby due to detections of manganese, iron, and aluminum at concentrations that exceed their respective SMCLs and inability to blend for treatment. The condition of the well was noted as fair and the age would suggest that it may be serviceable for future use, provided the steel casing has not deteriorated.

If treatment is the selected option, the condition of Well #7 should be further investigated including a downhole video log and casing thickness survey. This study is necessary to evaluate the longevity of this source before investing significant capital into treatment. Another option would be to conduct a vertical flow and water quality profile of the well. The purpose of this test would be to evaluate which screen intervals are contributing to the manganese in the well. If the results indicate these elements are derived from a particular zone(s), the well could be modified (with a liner or other means) to isolate them and improve water quality.

4.2 WATER QUALITY SAMPLING RESULTS

To further investigate the feasibility of the treatment approach, samples were collected from Well #7 to evaluate the presence of particulate vs. dissolved iron, manganese and aluminum. Although Well #7 has historically contained iron, manganese, and aluminum at levels above the SMCL, compliance samples are measured relative to samples collected for total metals, not dissolved. Understanding which phase the constituents are in (dissolved vs. particulate) will have important ramifications for the method of treatment required to remove them from drinking water.

On July 24, 2025 samples were collected at three different times (1 minute, 15 minutes, and 30 minutes after Well #7 start-up. The samples analyzed for dissolved metals were pre-filtered in the field ahead of analysis. The results are summarized in Table 4-1. The iron and aluminum were both present as particulates in all three samples. In both cases, the levels were reduced from above the SMCL after 1 minute to below the SMCL after 15 minutes of flushing. By contrast, the manganese was present primarily as dissolved manganese with little reduction during the start-up flush.

Table 4-1. Results from start-up testing for total and dissolved iron, manganese, and aluminum in Well #7.

Time after Well #7 Startup	Iron		Manganese		Aluminum	
	Total	Dissolved	Total	Dissolved	Total	Dissolved
1 minute	**1.5**	< 0.1	**0.080**	**0.059**	**0.62**	< 0.05
15 minutes	0.26	< 0.1	**0.063**	**0.060**	0.086	< 0.05
30 minutes	0.16	< 0.1	**0.063**	**0.060**	0.052	< 0.05

*__Bolded__ values are above the SMCL.

When considering these findings for their implications for the feasibility of the treatment approach, a 15-minute flush is sufficient to reduce the levels for the iron and aluminum below their SMCLs. However, manganese will require a pre-oxidation treatment stage to convert the manganese from the dissolved phase to an insoluble phase followed by a filtration step to remove it. The details of this approach and its cost can be found in Section 5.1.

4.3 BLENDING ANALYSIS

The sampling results in Section 4.2 demonstrated that manganese is present in dissolved form and would require treatment. A blending analysis was performed to assess whether treatment of Well #7 could be avoided using the flow from Wells #5 and #6, which contain lower levels of manganese. For this analysis, the valve located ahead of the 350,000-gallon storage tank (Figure 2.2) is assumed to be set to its intended position so that all well flows are routed to the tank and fully mixed prior to distribution. Blended manganese concentrations were compared to the California SMCL of 0.05 mg/L.

To represent normal variability in both quality and production, simple flow-weighted averages were calculated for three conditions:

- 10% loss of capacity in both Wells #5 and #6
- Loss of only Well #5
- Loss of only Well #6

For each condition, three water-quality cases were evaluated- median, 95th percentile, and maximum manganese for each well using the statistics summarized in Table 4-2. Blended values at or above 0.05 mg/L indicate that treatment would still be required.

Data for Well #5 and #6 were provided by PAPMWC from non-compliance samples collected by the system from January 2024 through July 2025. This data was requested due to the limited available data uploaded for compliance to Drinking Water Watch (DWW) (10 samples collected over more than 10

years). Data for Well #7 was collected from the DWW results. A summary of the iron, manganese and aluminum data used in the blending analysis is provided in Table 4-2.

Table 4-2. Median, 95th percentile, and maximum manganese concentrations for Wells #5, #6, and #7.

Parameter	Manganese		
	Well #5	Well #6	Well #7
Median	0.03	0.038	**0.061**
95th percentile	0.041	**0.060**	**0.089**
Max	0.049	**0.23**	**0.26**

*__Bolded__ values are above the SMCL.
Note: Data for Wells #5 and #6 was analyzed onsite and Well #7 data is from DWW.

Across all three operating conditions, the flow-weighted blended manganese equaled or exceeded the SMCL under routine (median) and less common (95th percentile and maximum) water quality cases (Table 4-3). Even with the valve repaired and blending in the tank restored, manganese would remain at or above the SMCL during normal operations. Accordingly, blending is not carried forward as a viable option.

Table 4-3. Blended Manganese concentrations in Scenario 1

Parameter	Scenario 1		Scenario 2		Scenario 3	
	Manganese	Flow	Manganese	Flow	Manganese	Flow
Median	**0.050 mg/L**	Well #5 = 69 gpm Well #6 = 234 gpm Well #7 = 350 gpm	**0.051 mg/L**	Well #6 = 260 gpm Well #7 = 350 gpm	**0.055 mg/L**	Well #5 = 77 gpm Well #7 = 350 gpm
95th percentile	**0.068 mg/L**		**0.070 mg/L**		**0.080 mg/L**	
Max	**0.17 mg/L**		**0.17 mg/L**		**0.22 mg/L**	

*__Bolded__ values are above the SMCL.

4.4 LISTENING SESSIONS

During July and August of 2025, Stantec conducted a series of strategic listening sessions with key stakeholders. The primary goal of the listening sessions was to gather context to inform the feasibility study and provide additional support for the analysis of the different options and proposed solutions. A co-

equal goal of the listening sessions was to ensure that relevant stakeholders have their perspectives, opinions, and experiences heard during this process.

The list of listening sessions participants was developed with input from PAPMWC and the DDW, as well as from desktop research conducted by Stantec. Interviewees included nearby water systems, local agencies, and community groups. Interviewees included community groups (Nuestra Casa, Neighbors for Better Water), nearby water systems (City of East Palo Alto Water, Menlo Park Water, and O'Connor Tract), and other relevant agencies (San Mateo County Local Area Formation Commission [LAFCo]). Insights from these listening sessions are shared for informational purposes and may not reflect all perspectives.

Interviewees provided input that was grouped into 4 major categories:

- Water Quality
- Accountability and transparency
- Water Affordability
- Local Control

A synthesis of what was heard is discussed below, grouped by these categories. Contradictory opinions and lack of unanimity are shared here without judgement. Input obtained from these listening sessions is informational and qualitative and is not meant to serve as a statistically representative assessment.

Accountability & Transparency

Multiple interviewees shared a lack of trust in PAPMWC's management structure. They identified limited accountability and transparency in water system management as key drivers of concern about water quality. Interviewees also raised significant community concerns about the management of financial resources and a lack of transparency around billing practices. In addition, they reported deficiencies in customer service, noting that customers often struggled to obtain timeline or adequate answers to questions about their bills or services. Interviewees emphasized that any alternative would need to be paired with robust community outreach and education, as well as deliberate efforts to rebuild trust between the community and the water system(s) involved.

Water Affordability

Most interviewees noted that water affordability is a key concern for residents and customers in East Palo Alto, and that customers are rate sensitive. Interviewees shared wariness that either alternative may raise rates and/or cause rates to become unaffordable. This concern is compounded by distrust of water quality. Interviewees shared that customers of all three water systems in East Palo Alto purchase bottled water for drinking, adding to household costs and increasing affordability challenges.

Local Control

Some interviewees noted that maintaining community (local) control of the system was important and a desirable outcome. Some interviewees related the desire for local control to the history of redlining and decisions being made “for” residents, without resident support. Some interviewees noted that developing an effective treatment solution may be very expensive, time consuming, or complex, but that maintaining local control may be worth the cost. Other interviewees suggested that transferring control to a government agency might ultimately provide more effective and transparent local control than a private nonprofit entity.

5.0 ALTERNATIVES ANALYSIS

To address the capacity issue at PAPMWC, this Feasibility Study evaluated two alternatives:

- Alternative 1: Provide treatment for PAPMWC and a new well
- Alternative 2: Receive water from the City of East Palo Alto
    - 2A: Physical Consolidation with the City of East Palo Alto
        - Option 1: Point of Connection with Pumps
        - Option 2: Pipeline to Tank
    - 2B: Intertie or interconnection with the City of East Palo Alto

5.1 Alternative 1- Treatment and New Well at PAPMWC

5.1.1 Description

Alternative 1 includes adding manganese treatment to address SMCL exceedances and the installation of a new well, Well #3R, to provide additional capacity to meet MDD. The manganese treatment is considered for both Well #7 only and for the full-system flow. In this alternative, select considerations for treatment implementation are also outlined.

Blending without additional infrastructure improvements or treatment has not been considered as an option due to the reduced capacity of Wells #5 and #6, as discussed in Section 4.3.

Alternative 1 includes background information on the operation of iron and manganese treatment as well as the impact on the distribution system. The goal of this background information is to provide systems considering this treatment with the knowledge base to work with design firms and vendors.

5.1.2 Construction of a New Well

To address the capacity shortfall, PAPMWC has submitted design plans to DDW District 17 for Well #3R. PAPMWC has paid for design drawings; DDW District 17 has not approved the submitted design drawings.

The proposed Well #3R would be capable of producing 300 gpm and located next to the existing Well #3 at a depth of approximately 300 ft bgs. The well is recommended to have the characteristics outlined in Table 5-1. The pumping capacity of 300 gpm, when combined with the 350 gpm from a treated Well #7, would allow the system to provide sufficient capacity to meet the MDD (Section 5.1.5).

The well cost was provided by the Maggiora Bros Drilling Inc. and includes the following: drilling the new well, casing/screen material, moving the existing building and mechanical tie in, moving the existing pump, new concrete pad, and fluids and drill cutting disposal. The use of stainless steel would provide additional protection given that this area has potential for seismic activity.

PAPMWC would additionally need to develop a set of new or edited design drawings to support the construction of this well. The cost of these drawings is included in Section 5.1.10.

Table 5-1. New Well Design and Cost Estimate from Maggiora Bros. Drilling, Inc.

Parameter	New Well #3R
Casing diameter (inches)	10
Casing and screen	Steel and stainless steel
Depth (feet below ground surface)	300
Pumping capacity (gpm)	300
Cost Estimate	
Well cost without new pump	$290,250
Well pump house	$18,500
Total cost	$308,750

5.1.3 Manganese Treatment

Centralized treatment for Well #7 (350 gpm) or the full capacity of the system (750 gpm) would use a two-step approach: pre-oxidation with chlorine followed by filtration. The pre-oxidation step with chlorination is added to convert the dissolved manganese (Mn^{2+}) into a particulate form (MnO_2) that can then be removed via filtration (Figure 5.1). The manganese particulates, along with any particulate iron and aluminum already present, are then captured as water passes through a filter. Three media types are commonly applied for manganese control: greensand, manganese-dioxide–coated silica sand, and manganese dioxide ore (pyrolusite). The MnO_2 surface of all three media acts as a catalyst to convert remaining dissolved manganese to insoluble oxides and retain the resulting solids within the filter bed. Greensand and coated sand use an inert core with a manufactured Mn-oxide surface. The selection of this treatment approach aligns with widely adopted guidance for iron and manganese control and current standards (AWWA, 2015).

Design considerations for this process are driven by water chemistry. Ferrous iron (Fe^{2+}) oxidizes faster than manganese (Mn^{2+}) and will therefore consume a portion of the applied oxidant; feed setpoints should explicitly account for this competing demand so that manganese is fully converted prior to filtration. Oxidation and catalytic conversion rates are pH-dependent and improve at higher pH. Similarly, the presence of dissolved organic carbon (DOC) can react with chlorine and increase the dose required to oxidize the manganese. The optimal pH and dissolved organic carbon levels are pH > 7.5 and a DOC < 2 mg/L. The water quality in all the wells at PAPMWC meets these criteria.

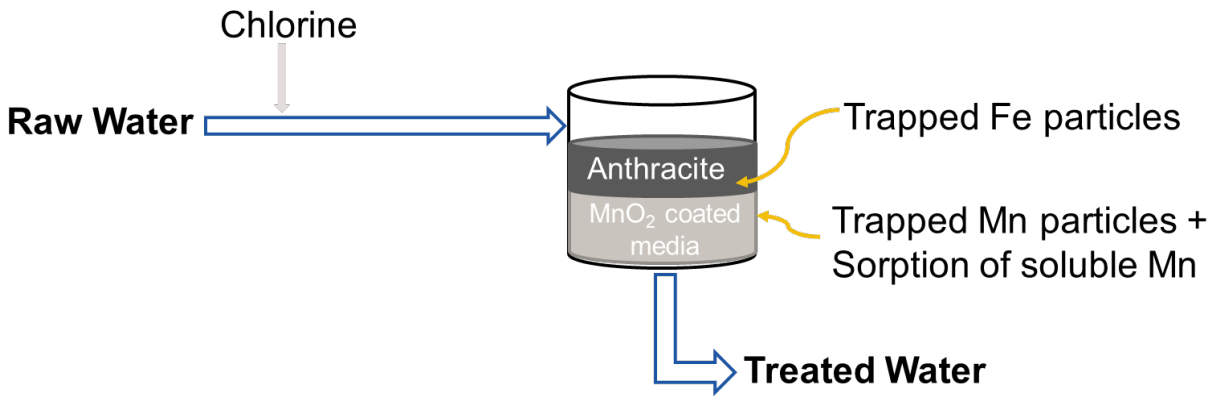

Figure 5.1. Treatment of dissolved manganese via pre-oxidation and filtration.

Start-up and routine operation are similar across the three media types. Beds are pre-conditioned to establish an active oxidized surface. During service, an oxidizing condition is maintained upstream of the filters to sustain catalytic activity. Filters are backwashed based on headloss or run time to remove accumulated oxides and restore capacity. Specific setpoints (chlorine residual targets, loading rates, and backwash criteria) will be finalized during detailed design and commissioning with the media vendor and DDW.

5.1.3.1 Design Criteria for Iron/Manganese Treatment

Three different vendors were contacted for operating conditions and sizing, including backwashing at 350 gpm (Well #7) and 750 gpm (full system capacity). The three vendor's treatment parameters can be found in Tables 5.2 – 5.4. One of the primary differences between the different vendor configurations is the surface loading rate, which determines the number of vessels needed for treatment and significantly impacts the cost of the system. Operational control points include monitoring free-chlorine residual ahead of the filters, monitoring filtered iron and manganese, and using differential pressure to trigger backwash. Final setpoints (oxidant residual targets, surface loading rate, and backwash criteria) will be confirmed during design and commissioning with the media vendor and DDW.

The ATEC proposal included a pyrolusite media operated at a surface loading rate of 6.96 gpm/ft^2 for 350 gpm and up to 9.95 gpm/ft^2 at 750 gpm (Table 5-2). As a result of the higher surface loading rate, fewer vessels are needed to support the flow. The higher loading rate was proposed by ATEC based on the results of a pilot they completed at PAPMWC in 2021 (Appendix A- Pilot Study). The 2021 pilot applied pre-chlorination and pyrolusite media and was run over two days with Well #7 water. The objectives were to verify manganese and iron removal at practical surface loadings, quantify oxidant demand, and observe filter run behavior under local pH and background water quality. The surface loading rate was 9.95 gpm/ft^2 and the chlorine dose was on average 3.15 mg/L. The treated iron and manganese were below 0.005 mg/L and 0.03 mg/L, respectively. The results from this pilot validated that a surface loading rate of up to 9.95 gpm/ft^2 could be applied. However, this higher range would need to be approved by DDW before being implemented.

Table 5-2. Design parameters for ATEC iron/manganese treatment.

Parameter	unit	Well #7 (350 gpm)	Full-system capacity (750 gpm)
Oxidant	-	Pre-chlorination	Pre-chlorination
Diameter of Vessels	inches	48	48
Number of vessels	-	4	6
Media Depth	inches	42	42
Media Volume	cubic feet	176	264
Media Type	-	Pyrolusite	Pyrolusite
Empty Bed Contact Time	minutes	3.8	2.6
Surface Loading Rate	gpm/ft^2	6.96	9.95
Backwash Frequency	days	1	1
Backwash Flow Rate	gpm	251	251
Backwashing Loading Rate	gpm/ft^2	20	20
Backwash Duration	minutes	30	30
Backwash Volume	gallons	7,540	7,540

Yardney proposed chlorine pre-oxidation followed by filtration using a manganese oxide coated silica sand (

Table 5-3). Chlorine feed is applied immediately upstream of the filters, with standard control points at the filter inlet and outlet to verify performance across both flow conditions. Relative to ATEC, lower surface loading rates were proposed by Yardney, as they have not piloted this water. As a result, the configuration required larger and more vessels than the ATEC proposal.

Table 5-3. Design parameters for Yardney iron/manganese treatment.

Parameter	unit	Well #7 (350 gpm)	Full-system capacity (750 gpm)
Oxidant	-	Pre-chlorination	Pre-chlorination
Diameter of Vessels	inches	54	54
Number of vessels	-	8	10
Media Type	-	Manganese dioxide coated silica sand	Manganese dioxide coated silica sand
Surface Loading Rate	gpm/ft^2	5.90	4.72
Backwash Frequency	days	10	10

Parameter	unit	Well #7 (350 gpm)	Full-system capacity (750 gpm)
Backwash Flow Rate	gpm	238.5	238.5
Backwash Duration	minutes	38	38
Backwash Volume	gallons	9,250	9,250

The third vendor, Chart, also proposed a chlorine pre-oxidation followed by manganese-dioxide filtration system using manganese dioxide coated silica sand (

Table 5-4). By using larger-diameter vessels, the design maintains a conservative surface loading of 5.2 gpm/ft² while minimizing the number of filters. This relatively low loading rate reflects the fact that Chart has not piloted this source water. Chlorine is applied immediately upstream of the filters; standard control points at the filter inlet and outlet are used to verify oxidation and capture performance across both flows.

Table 5-4. Design parameters for Chart iron/manganese treatment.

Parameter	unit	Well #7 (350 gpm)	Full-system capacity (750 gpm)
Oxidant	-	Pre-chlorination	Pre-chlorination
Diameter of Vessels	inches	84	84
Number of vessels	-	2	4
Media Volume	cubic feet	304 ADGS+; 152 anthracite	608 ADGS+; 304 anthracite
Media Type	-	Manganese dioxide coated silica sand (ADGS+) with anthracite cap	Manganese dioxide coated silica sand (ADGS+) with anthracite cap
Surface Loading Rate	gpm/ft^2	5.2	5.2
Backwash Frequency	days	10.7	10.7
Backwashing Loading Rate	gpm/ft^2	12	12
Backwash Flow Rate	gpm	465	465
Backwash Duration	minutes	20	20
Backwash Volume	gallons	9,300	9,300

Cost estimates from all three vendors, ATEC, Yardney, and Chart, were obtained for the two operating scenarios (Table 5-5). Each quote reflects the same process train of chlorine pre-oxidation followed by filtration and covers vendor-supplied equipment only. The cost differences are driven primarily by the number of filter vessels needed to meet the surface loading rate, as discussed above, with the highest surface loading rate provided by ATEC based on their piloting results. Given the range of different costs provided by the vendors, an average of the three was used as the estimate for capital costs.

Table 5-5. Equipment costs from three vendors for Well #7 treatment or full-system flow.

Vendor	Equipment Cost			
	Well #7 (350 gpm)	**Equipment List**	**Full-system flow (750 gpm)**	**Equipment List**
ATEC	$145,000	Vessels (4), media	$212,500	Vessels (6); media
	$75,000	PLC controls	$75,000	PLC controls
	$20,000	Process Controls	$40,000	Process Controls
	$8,500	Chlorine storage and level sensor	$17,000	Chlorine storage and level sensor
	$14,000	Chlorine dosing pumps	$28,000	Chlorine dosing pumps
	$262,500	**ATEC Total**	**$372,500**	**ATEC Total**
Yardney	$348,000	Vessels (8), valving, PLC controls; media	$437,110	Vessels (10), PLC controls, media
	$8,500	Chlorine storage and level sensor	$17,000	Chlorine storage and level sensor
	$14,000	Chlorine dosing pumps	$28,000	Chlorine dosing pumps
	$370,500	**Yardney Total**	**$482,110**	**Yardney Total**
Chart Industries	$339,000	Vessels (2), Chlorine dosing, PLC controls, monitoring equipment, media	$640,000	Vessels (2), Chlorine dosing, PLC controls, media
	$339,000	**Chart Total**	**$640,000**	**Chart Total**
	$324,000	Average of three vendors	**$498,203**	Average of three vendors

In addition to the capital costs associated with the process equipment, operations and maintenance (O&M) costs are shown in Table 5-6. The costs include the addition of chlorine for pre-treatment, replacement of iron/manganese media, and additional sampling needs. The total O&M cost will include the disposal of backwash waste (as described in Section 5.1.4). The average chlorine demand observed during the pilot test conducted by ATEC was 1.84 mg/L. Assuming a residual of > 0.1 mg/L needs to be applied during treatment, the initial dose was assumed to be 2.0 mg/L. Depending on the residual leaving the treatment process, the chlorination costs ahead of distribution may decrease. The iron/manganese media cost per year was based on an anticipated lifetime of approximately 10 years for the media.

Table 5-6. O&M Costs Associated with Treatment

Category	Unit	Well #7 (350 gpm)	Full-system flow (750 gpm)
Chlorine Dose	mg/L	2.0	2.0
Chlorine Usage*	gallons/month	267	571

Category	Unit	Well #7 (350 gpm)	Full-system flow (750 gpm)
Pre-chlorination cost	gallons/year	3,200	6,858
	$/gallon	1.53	1.53
	$/year	$4,897	$10,492
Media Replacement	Media replacement cost**	$134,000	$166,910
	$/year	$13,400	$16,690
Additional chlorine, iron, and manganese testing	$/year	$2,500	$2,500

*Assumes chlorine solution of 12.5%. **Provided in quote from Yardney.

5.1.4 Backwash Water Management

Backwash water management for this project would follow standard practice and incorporate the City of East Palo Alto's discharge constraints. Two approaches were evaluated:

- direct discharge to the sanitary sewer at a controlled rate, and
- a backwash recycle system with hauled disposal of solids

There are two considerations for the selection of a backwash disposal system. The first is the total allowable flow by the City of East Palo Alto sanitary sewer at PAPMWC and the second is the acceptable water quality for the backwash water. The allowable sanitary sewer discharge rate for the City of East Palo Alto is 62.5 gpm under all conditions or 125 gpm in dry weather and the water must have manganese < 1 mg/L. The range of backwashing discharge from the three vendors, 238.5 – 465 gpm, is above the capacity of the sewer even in dry weather. As a result, PAPMWC would need a collection/equalization tank. In addition, the acceptable manganese levels would be exceeded in the backwash water with an estimated manganese concentration > 4 mg/L. This estimated manganese value was calculated assuming an influent level of 0.060 mg/L with 90% removal of manganese and a backwash frequency of once per day up to once per 10 days.

As a result of these two limitations, a backwash recycle system is required for treatment (Table 5-7). The backwash recycle system involves the addition of a collection tank with a cone bottom that allows the solids to settle out, a sludge tank for storage of the settled sludge, and pumps to recycle approximately 10% of the flow back to the head of the system. The capital cost for the backwash system was averaged between the two vendors (Table 5-7). The settled solids from the sludge tank can then sent for disposal. For the purpose of this evaluation, it was assumed that the settled solids would be classified as non-hazardous waste. However, additional testing would need to be completed to determine if the low levels of uranium (max of 1.0 pCi/L in all wells) and radium-228 (max of 1.94 pCi/L) detected in Wells #5, #6, or #7 accumulate in the sludge. The volume of material to be transported was assumed to be less than half the volume of the sludge management tank(s). The volume used in the cost estimate evaluation is listed below.

Table 5-7. Backwash recycle system parameters and disposal costs.

		Well #7 (350 gpm)		Full-system flow (750 gpm)	
Parameter	**unit**	**Chart**	**Yardney**	**Chart**	**Yardney**
Backwash Tank Volume	gallons	6,500	10,000	6,500	10,000
Number of Backwash Tanks	-	2	1	4	2
Backwash Sludge Tank	gallons	5,500	5,500	5,500	10,000
Number of Sludge Tanks	-	1	1	2	1
Equipment Cost	**-**	**$131,000**	**$150,000**	**$262,000**	**$227,000**
Average of two vendors		**$140,500**		**$244,500**	
Volume of Sludge for Disposal	gallons	2,000	2,000	4,000	4,000
Disposal Frequency	days	60	60	60	60
Non-hazardous Waste Disposal Cost*	$1.50/gallon	$3,000	$3,000	$6,000	$6,000
	Delivery fee	$700	$700	$700	$700
	Total per disposal	$3,700	$3,700	$6,700	$6,700
	Cost per year	**$22,200**	**$22,200**	**$40,200**	**$40,200**

*Estimates provided by Clean Harbors. Non-hazardous Cost of $1.50/gallon and delivery fee of $700. Hazardous cost of $2.00/gallon and delivery fee of $6,500.

The operation of the treatment system would require additional training for the PAPMWC staff and additional on-site testing to ensure the process is operated properly. The addition of this process would not impact the classification of PAPWMC as “treatment that alters the physical or chemical characteristics of water” only adds 3 points to the system total (Title 22 §64413.1), which is not enough to move them above T1 Classification. As a result, the operators currently on staff at PAPMWC would be able to operate the system with their current certifications.

5.1.5 Hydraulic Calculations

Apart from the disposal of backwash water, another consideration for the implementation of iron/manganese treatment is the capacity of the existing pumps to overcome the headloss associated with the treatment system. If the capacity of the pumps is lower than is needed, there could be a loss in production which would impact the total flow produced by the system. In that case, if flow requirements previously described are not met, an upgrade of the pumps or addition of a booster pump station would be needed to support treatment.

It was conservatively assumed that the pumps cannot provide additional head to maintain the current production rate with the additional pressure loss through the treatment system. Therefore, the assessment of whether the existing pumps can overcome the headloss introduced by the treatment system was based on calculating if the adjusted production rate would still satisfy the MDD. Using hydraulic data for the different media types presented in Section 5.1.3 and professional engineering judgement, the total pressure drop across the treatment system was estimated to be 15 psi at terminal state, including major and minor losses associated with piping and considering the differences among the vendor proposals presented previously. An additional pressure drop of 15 psi, or about 35 ft, was added to the total dynamic head (TDH) associated with each pump's current pumping capacity and the sum was assumed to be the TDH required to overcome the losses associated with the treatment system. Following the curve for each well pump, the new production rate associated with the required TDH was determined. Naturally, an increased TDH will result in a lower production rate.

Table 5-8 summarizes the data and resulting production rate for each well pump. The current pumping capacity is repeated from Table 2-1 for clarity. However, it should be noted that through conversations with PAPMWC staff, although Well 7's current pumping capacity is 350 gpm, the staff throttles the discharge valve to limit the flow to 300 gpm. This means the discharge valve is partially closed to restrict flow, so even though the pump can deliver 350 gpm, the system limits the actual discharge to 300 gpm. As shown, the sum of the pumps' adjusted production rates is greater than the MDD of 593,000 gallons by almost 40%. In addition, this sum does not include the capacity provided by the addition of a new well.

Table 5-8. Hydraulic considerations for Iron/Manganese Treatment.

Item	Well #5	Well #6	Well #7
Current pumping rate (gpm)	77	260	300*
Current TDH (ft)	325	210	206
Estimated treatment losses (ft)		35	
Required TDH (ft)	360	245	241
Adjusted Production Rate (gpm)	55	232	280
Total Daily Production (gallons)		816,480	

*Well 7's current pumping capacity is 350 gpm, but based on discussions with PAPMWC staff, the staff throttles a valve to limit the discharge to 300 gpm.

The preliminary hydraulic analysis described indicates that the existing well pumps will be able to support the addition of a treatment system and still be able to meet the MDD. If this alternative is selected, it is recommended that a more detailed analysis be completed in future phases of design to confirm this preliminary conclusion. The losses associated with the treatment system should be refined with the vendors as more design details are determined. Additionally, it is recommended that modeling software is used to develop a whole system pump curve to verify the capability and capacity of the well pumps during detailed design.

5.1.6 Impact of Treatment on Distribution System

Following the implementation of treatment for Well #7 or the full capacity of the system, the distribution system will be impacted by the lower levels of iron and manganese in the treated water. Lower levels of iron and manganese in the treated water may alter the equilibrium chemistry in the distribution system and may cause short-term sloughing of existing scales as a new equilibrium level is established. Adverse effects can be mitigated by unidirectional flushing.

Manganese in the distribution network can accumulate even at low finished-water levels. Deposits form on pipe walls and in dead-end or low-velocity zones and show up at the tap as dirty-water complaints or laundry staining. As deposits build, they reduce hydraulic capacity and increase headloss. Manganese also supports biofilm growth, which can destabilize deposits and make discoloration events more frequent. In systems with lead components, manganese can interfere with the formation of stable lead scale, increasing the risk of lead release. Accumulated oxides can also later oxidize trace inorganics.

Release events are tied to changes in water chemistry and hydraulics. Higher water temperature accelerates oxidation and biofilm activity. Shifts in pH and alkalinity change manganese speciation and the tendency to form or dissolve oxides, and oxidation-reduction potential governs whether manganese remains soluble or converts to particulate form. Hydraulic disturbances such as sudden velocity changes, flow reversals, and pressure transients dislodge sediments and biofilms. Typical triggers include main breaks, firefighting flows, flushing, repairs, and seasonal demand patterns.

Pipe material influences how deposits form and release. In PVC systems, manganese readily incorporates into corrosion and biofilm scales, and those scales tend to release more easily under hydraulic stress. The combination of susceptible surfaces and intermittent transients can lead to recurring aesthetic complaints unless deposits are proactively managed.

Figure 5.2 below illustrates how soluble manganese enters the distribution system, accumulates on pipe walls through sorption, precipitation, and sedimentation, and later releases as particles due to destabilization, dissolution, desorption, and resuspension. The figure also highlights the role of corrosion scale, biofilm, and settled material as reservoirs that feed release events to the customer tap.

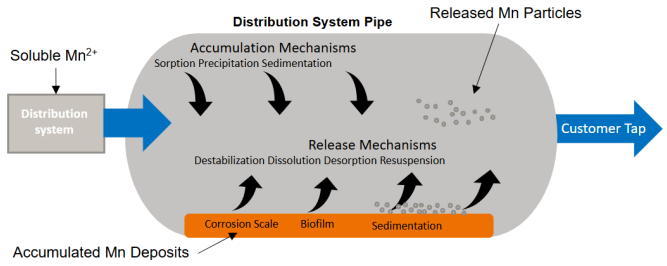

Figure 5.2 Pathways for Mn Buildup and Particle Release from Pipe Scale

A practical management framework follows three steps. First, evaluate existing conditions by characterizing source and treated water, documenting deposit prevalence and properties, reviewing customer complaints and maintenance records, and identifying high-risk areas. Second, address existing manganese deposits using targeted flushing for mobile material, pigging for adherent deposits, selective pipe replacement where warranted, and stabilization of water chemistry to improve quality and reduce corrosivity. Third, reduce future accumulation and release by implementing the selected treatment upgrades, establishing a monitoring program, maintaining a routine cleaning program, and controlling disinfection conditions so that distribution-system chemistry remains stable.

To address the potential iron and manganese release following the installation of treatment would include first evaluating the deposit and their prevalence within the distribution system. Given the customer complaints documented in Section 4.4, it is likely that there are significant deposits within the distribution system. To address the release of these deposits, targeted flushing to mobilize and removal material would be recommended for PAPMWC. If significant iron and manganese deposit releases continue, pigging may be necessary for larger main pipes.

5.1.7 Environmental Impacts

This alternative involves constructing new treatment equipment and the construction of a new well, Well #3R. For treatment, this would require changing the flow of the existing piping from the wells and to the water storage tanks. The new well would similarly need a connection to treatment or to the storage tanks. An environmental impact assessment must be conducted to evaluate the potential effects on air quality, noise levels, biological resources, and water quality during construction. The trenching and installation of new water distribution infrastructure may disturb soil and vegetation, necessitating erosion control measures.

A California Environmental Quality Act (CEQA) analysis will be required for the installation of treatment and may be required for the new well. Under this assessment, the construction and long-term project impacts would be assessed. The initial study assessment under CEQA would determine the type of report that would be necessary, i.e., a Negative Declaration indicating no significant environmental impacts, a Mitigated Negative Declaration showing that the impact can be mitigated, or an Environmental Impact Report when there is potential for adverse effects beyond thresholds. It is likely that the installation of the treatment will require a Mitigated Negative Declaration, but following review it may need an Environmental Impact Report. It is believed that the new well will not require additional CEQA approval following PAPMWC's communication with the City of East Palo Alto. The costs associated with these assessments can be found under Planning, Engineering, Legal, and Administrative costs.

5.1.8 Land Requirements

There is space at the existing PAPMWC site for both the new treatment and Well #3R. To size the footprint of the entire system including the treatment skid, service clearances and access, small ancillary pads (electrical/controls and chlorine feed), and backwash-recycle tanks, we compared what the three vendors proposed and determined that Palo Alto conservatively needs 45 ft × 70 ft in land requirements for the largest configuration while keeping room for operations and maintenance. Figure 5.3 below shows

the approximate pad location as well as the location of Well #3R; however, final siting would be completed during the design.

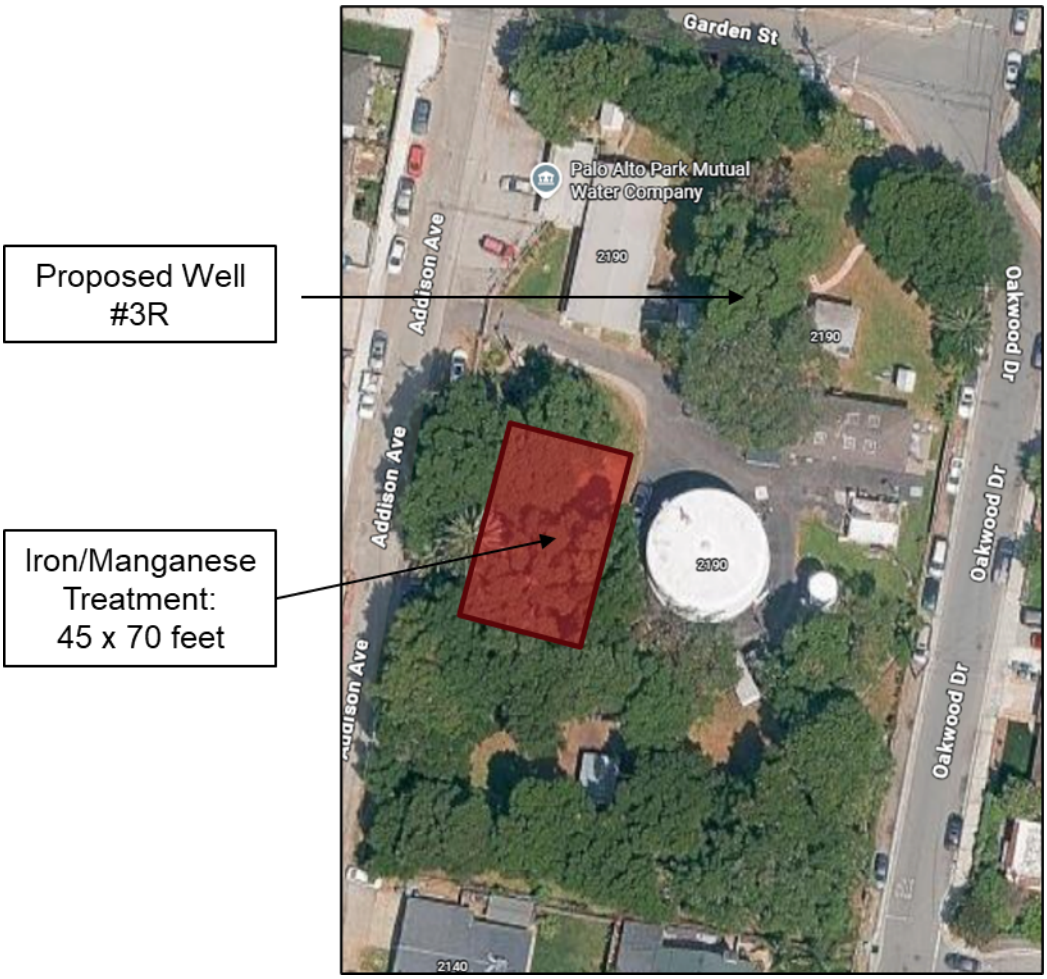

Figure 5.3. Proposed iron/manganese treatment location at PAPMWC.

The anticipated sizing would vary depending on the final sizing of the treatment system, e.g., Well #7 only or full-system capacity. The 350 gpm pad sizing was based on the three vendor equipment sizes with a total of 70 x 20 ft including the iron/manganese treatment (10 x 10 ft), chlorine dosing (4 x 6 ft), and the backwash recycle system (25 x 10 ft). The 750 gpm pad sizing was similarly based on the three vendor equipment sizing with a total of 70 x 40 ft including the iron/manganese treatment (15 x 10 ft), chlorine dosing (10 x 10 ft), and backwash recycle system (45 x 15 ft).

5.1.9 Construction and Site Considerations

Based on the vendor proposals for access and small ancillary pads, a planning footprint of approximately 45 ft × 70 ft is sufficient to accommodate the treatment skid, chemical feed, and backwash-recycle tanks. Entry/egress and internal mobility are not disrupted, remaining the same as current site use. Final dimensions would be refined during design.

Site/Construction Considerations include:

- Reinforced concrete pad with positive drainage; anchors coordinated with vendor frames.
- All-weather access and working clearances around equipment.
- Structure for chemical feed, electrical, and control equipment.
- Power/controls and chemical storage with secondary containment and eyewash.
- Provisions for recycle-tank piping and truck access for hauled residuals.
- Standard best management practice for dust, noise, and stormwater; permits and DDW plan review during design.

5.1.10 Cost Estimate

The cost estimate for this alternative includes both the new well and treatment infrastructure costs as well as the construction capital costs, planning, engineering, legal and administrative costs. The cost estimate was generated for either the flow of Well #7 and the full-system capacity. The full-system capacity would include the existing well flow, i.e., Well #5, #6, and #7, or the flow from the future well, Well #7 and Well #3R. For both options, the final capital treatment cost was generated using an average of the three vendors for both the iron and manganese treatment and the backwash recycle system. The final O&M costs included chlorine dosing, additional iron/manganese monitoring, and sludge disposal.

Table 5-9. Capital and O&M for Alternative 1

Category	Item	Well #7 (350 gpm)	Full-system Flow (750 gpm)
		Cost	Cost
Treatment Capital Costs	Iron/Manganese Treatment	$324,000	$498,203
	Backwash Recycle	$140,500	$244,500
	Well #3R	$308,750	$308,750
	Treatment Capital Total	**$773,250**	**$1,0541,453**
Construction Capital Costs	Structural and Architectural (20% of Treatment Capital)	$154,650	$210,291
	Installation (20% of Treatment Capital)	$154,650	$210,291
	Electrical and I&C (5% of Treatment Capital)	$38,663	$52,573
	General Site Civil (15% of Treatment Capital)	$115,988	$157,718
	Subtotal	**$1,237,200**	**$1,682,325**
	Overhead and Profit (10% of Subtotal)	$108,255	$147,203
	Contingency (20% of Subtotal)	$270,638	$368,009

Category	Item	Well #7 (350 gpm)	Full-system Flow (750 gpm)
		Cost	Cost
	Total Construction Capital Costs	**$1,609,000**	**$2,188,000**
Planning, Engineering, Legal, and Administrative Costs	Planning, Engineering, Legal, and Administrative (15% of Total Construction Capital Costs)	$241,254	$328,054
	Construction Administration (10%)	$160,836	$218,702
	Total Costs (Rounded)	**$2,011,000**	**$2,734,000**
Annual O&M	Chlorine Dosing	$4,897	$10,492
	Media Replacement	$13,400	$16,691
	Additional Monitoring	$2,500	$2,500
	Sludge Disposal	$22,200	$40,200
Annual O&M (Rounded)		**$43,000**	**$70,000**

The future flow of the system would be based on the capacity provided by Well #7 (treatment adjusted of 280 gpm) and Well #3R (300 gpm), which would provide sufficient capacity (835,200 gallons over 24-hours) to meet the MDD. The water quality for proposed Well #3R is unknown, but likely to contain manganese below the SMCL based on the existing data from Wells #5 and #6. The decision between providing treatment for Well #7 only versus the full flow would be based on the water quality in Well #3R.

As noted in Section 4.1.3, if this alternative is selected, the condition of Well #7 should be further investigated by a downhole video log and casing thickness survey and/or to conduct a vertical flow and water quality profile of the well. The downhole video log and casing thickness survey would provide a better understanding of the longevity of Well #7 ahead of investing significant capital in its treatment. The vertical flow and water quality profile of the well would help PAPMWC understand if there are portions of the well contributing significantly to the elevated manganese levels and allow them to understand if a particular zone(s) of the well could be modified (with a liner or other means) to improve water quality.

Currently, PAPMWC does not have individual meters on their connections, but they would need to install them by 2032 to comply with CA SB No. 552 (2021). This cost estimate does not include the cost of adding meters because all alternatives would need to bear the cost of this change. To understand the impact of treatment and meter costs on PAPMWC customer rates, a Capital Improvement Plan would need to be developed alongside an evaluation of the total O&M costs for PAPMWC. The Capital Improvement Plan would include information on the useful life of each piece of infrastructure that PAPMWC owns. With this information, a new rate could be set.

5.1.11 Advantages and Disadvantages

Apart from the cost, the advantages and disadvantages of Alternative 1 are shown below in Table 5-10. Under this alternative, PAPMWC would retain their independence as a utility and would be able to provide

drinking water that meets both the water quality and capacity regulations. The approach would require additional training for staff and operators on how to run the new iron/manganese treatment system and would require additional sampling to monitor the system. In addition, this would not resolve the on-going customer service issues identified in the listening sessions.

Table 5-10. Advantages and disadvantages of Alternative 1.

Advantages	Disadvantages
• Treatment would ensure that PAPMWC customers are served with water quality that meets all MCLs and SMCLs • New asset in Well #3R with high capacity for production • During the listening sessions (Section 4.4), some members of the community shared that they perceive PAPMCW as a community asset and they are proud to have local mutual water company which has been operating in East Palo Alto since 1924	• On-going O&M costs beyond what is currently required for the system which may lead to a rate increase for customers. A Capital Improvement Plan is needed to establish rates. • Has the potential to increase costs for PAPMWC residents • Additional staff time needed to operate the treatment system and collection additional samples to monitor the treatment system • Significant investment in Well #7 which may itself have additional infrastructure needs • During listening sessions (see Section 4.4), some members of the community expressed frustration with customer service provided by PAPMWC. Treatment would not address those concerns

5.2 ALTERNATIVE 2A- PHYSICAL CONSOLIDATION

5.2.1 Description

Alternative 2A evaluates the feasibility of physical consolidation with the City of East Palo Alto. Under Alternative 2A, PAPMWC would be subsumed by the City of East Palo Alto, which operates the municipal water service. The City of East Palo Alto would assume ownership and management of the water system, including maintenance of all infrastructure, and all management including billing and customer service. Managerial consolidation was not considered as an option because of the need for additional water capacity to meet PAPMWC's MDD and MDD plus fire flow (MDD + FF) scenarios.

The City of East Palo Alto purchases most of its potable water from the San Francisco Public Utilities Commission (SFPUC) Regional Water System in accordance with the Water Supply Agreement between the City of East Palo Alto and County of San Francsico and Wholesale Customers. The City of East Palo Alto receives 2.09 million gallons per day as per their Individual Supply Guarantee contracted with SFPUC. Additionally, the City of East Palo Alto owns and operates one groundwater well. In 2018, the City of East Palo Alto completed construction of an iron and manganese treatment facility at this well to enable it to be used as a potable water source. Since completion, the well has only used intermittently but

may operate regularly in the future. The City of East Palo Alto is considering drilling an additional well to also serve as a standby source.

As shown in Figure 2.2, a small portion of PAPMWC lies outside of the City of East Palo Alto and within the City of Menlo Park. For the City of East Palo Alto to service those customers with drinking water services, an external services agreement would be required. An external services agreement is a LAFCo process that enables public service providers to extend services to areas outside of their sphere of influence or jurisdictional boundary.

To evaluate the feasibility of Alternative 2A, which is physical consolidation, it is assumed that the wells at PAPMWC would be decommissioned and destroyed. This assumption was made due to the age and condition of Well #5 and #6 (Section 4.2) and the water quality issues associated with Well #7 (Section 2.1.2). As a result, these assets are assumed to have no value for the City of East Palo Alto. In the event where the MWC takes steps to dissolve as a corporation and surrenders its domestic water supply permit by an act of its members, the disposition of the assets of the MWC, including any durable goods, equipment, land owned by the MWC, and storage tanks would need to be coordinated appropriately. The process for doing this, and the potential values associated with these assets, were not evaluated by this study.

The cost of decommissioning is provided below in Section 5.2.7.

Two cost estimates were developed to support physical consolidation between the City of East Palo Alto and PAPMWC's:

1. Connection between distribution systems: two connection points would be built to connect the City of East Palo Alto distribution system with the existing distribution system of PAPMWC. These connection points are assumed to require booster pumps to serve the distribution system for PAPMWC. Two connections are needed to meet the minimum required distribution system pressure during a MDD plus fire flow scenario. One intertie point was selected based on the existing connection between the two systems at Poplar Avenue and Green Street and the other location was selected based on the location on the other side of the highway and proximity to the City of East Palo Alto distribution system at Garden Street and Holland Street.

2. Connection via a pipeline that would supply the existing PAPMWC tank. The pipeline was placed at the closest supply point between the City of East Palo Alto and PAPMWC's tank.

Under this alternative, additional analyses would need to be completed to support consolidation, regardless of the engineering approach including: City of East Palo Alto capacity review, further development and calibration of the water model, a distribution system water quality study, and an affordability study.

The City of East Palo Alto would need to identify a source to provide the additional water capacity needed to service new customers in the PAPMWC area. A planning study would need to be undertaken. Currently, the City of East Palo Alto receives its supply from the SFPUC, which guarantees 2.09 million gallons per day under the City of East Palo Alto's Individual Supply Guarantee (ISG). This existing ISG may not be sufficient to accommodate new customers, depending on future development in East Palo

Alto or potential drought conditions (WRF 4703, 2021). The City of East Palo Alto would evaluate how much additional water capacity is required. If additional water capacity is needed, the City of East Palo Alto may be able to purchase additional water supply from SFPUC through a water transfer agreement with another wholesaler. Such an agreement would transfer a specified portion of the wholesaler's ISG to the City of East Palo Alto and SFPUC would deliver the transferred water through existing infrastructure. Any such transfer would need to be coordinated and approved by the City of East Palo Alto, the respective agency, SFPUC, and the Bay Area Water Supply and Conservation Agency (BAWSCA). Administrative updates related to these amendments, such as revising existing contracts and updating SFPUC service area maps, would also need to be completed by the responsible parties and may result in additional costs. However, at this stage these costs are unknown and are not included in this Feasibility Study.

A preliminary hydraulic model was created in WaterGEMS to determine if the City of East Palo Alto distribution system could provide the PAPMWD MDD + FF demands and if booster pumps would be needed at the points of connections between the two distribution systems The preliminary model needs to be calibrated and confirmed by both systems. In addition, the model would need to be updated to reflect how the connected systems would be operated.

In the distribution system study, an evaluation of the impact SFPUC water would have on the distribution of system of PAPMWC would be undertaken. Given that a new water source would be introduced under this alternative, a study evaluating the risk of the release of lead, copper, iron and manganese (Section 5.1.6) would need to be completed. Currently, the City of East Palo Alto applies no corrosion control to their water and has not experienced Action Level exceedances for lead or copper. They have similar piping to what is present in PAPMWC with the system served primarily by cast iron. As a result, this Feasibility Study assumes that the new water source from the City of East Palo Alto is able to be utilized in the existing distribution system with minimal changes. However, it is possible that the distribution system study would find that additional corrosion control or distribution system upgrades may be necessary. The cost of those potential upgrades are not included in this Feasibility Study.

The impact of SFPUC water on affordability was not evaluated in this Feasibility Study. The listening sessions found that customers in the PAPMWC service area were rate sensitive, and an increase in rates may make water unaffordable for many customers. The current rates are difficult to compare as PAPMWC rates are based on residence size and the City of East Palo Alto rates are based off usage and size of meter (PAPMWC, 2025; City of East Palo Alto, 2025). In this work, no rate analysis was completed, and it is unknown how the City of East Palo Alto rates would change following consolidation.

Although the feasibility of retaining PAPMWC's existing wells as a backup or standby source was not evaluated in this Feasibility Study, the redundancy that a new well, e.g., Well #3R, may provide could yield increased resiliency. The cost of developing the new well was estimated in Section 5.1.2. The cost of rehabilitating the existing wells was not evaluated, as the wells are assumed to have exceeded their useful life or would require treatment to be used. The feasibility of blending groundwater, e.g., Well #3R of treated Well #7, with surface water purchased from SFPUC was not evaluated. This would require additional distribution system analysis for corrosion and the potential to release iron/manganese. The City

of East Palo Alto indicated that they currently do not do any corrosion control, but the scale developed at PAPMWC and the piping within the system may be different enough to warrant concern.

Beyond the studies needed to address infrastructure and water quality concerns, there are additional representation considerations that would need to be evaluated before this alternative could move ahead. The residents who live within the City of Menlo Park (six service connections) but who are served by PAPMWC would not be represented in the City of East Palo Alto's governance. This is not unusual in San Mateo County, and LAFCo identified potential solutions, including the establishment of an Advisory Group, or other.

Alternatively, it is possible that those in the City of Menlo Park (six service connections) could consolidate those customers that reside within their service area. This would be a separate consolidation process than the consolidation of PAPMWC and the City of East Palo Alto, but it is similarly expected that in this scenario the City of Menlo Park would assume ownership and management of the water system within the City's boundaries, including maintenance of all infrastructure, and all management including billing and customer service. In this scenario, the City of Menlo Park would be responsible for ensuring sufficient water supply to service these additional customers.

Note that in either scenario, a representation change would occur wherein residents who are served water by a municipal agency are represented by that agency. Currently, homeowners who may or may not live in the area are considered stakeholders in the mutual water company, and have voting power, whereas residents who are not homeowners do not.

Lastly, the City of East Palo Alto may choose to establish an assessment area for the area previously served by PAPMWC. This would enable the City of East Palo Alto to charge relevant fees to support the consolidation process or address any deferred maintenance of PAPMWC assets pursuant to Proposition 218.

5.2.2 Distribution System Connection Design Criteria

To meet the demand from PAPMWC, one option is to connect the City of East Palo Alto distribution system directly to the PAPMWC distribution system. The City of East Palo Alto currently operates their system with a pressure of 60 psi entering the system and a lower pressure of 54 psi when it reaches the ends of the distribution network. PAPMWC currently operates its system at a pressure of 65 psi.

The proposed infrastructure includes the replacement of the existing intertie located at the intersection of Green Street and Poplar Avenue, construction of a new physical connection at an agreed upon location with the City of East Palo Alto, and construction of a booster pump station at each intertie location. For this study and for modeling purposes we assumed the second intertie location could be near the intersection of Garden Street and Holland Street. A WaterGEMS model was created for PAPMWC since there was no water model of their distribution system. Figure 5.4 shows the PAPMWC distribution system model. The two proposed points of connection (POCs) between the two distribution systems are circled in the figure.



Figure 5.4. Distribution system POC locations.

Table 5-11 shows the pipe material and the associated Hazen-Willams (H-W) coefficient of friction (C-factor) assumed for that existing pipe material within the model.

Table 5-11. Modeled Pipe Material Friction Factors.

Pipe Material	H-W C-Factor
CI	80
DI	120
HDPE	150
PVC	150

The existing intertie consists of three 6-inch gate valves, a meter and vault, a flow control valve and vault, bollards, and associated piping as shown in Figure 5.5.

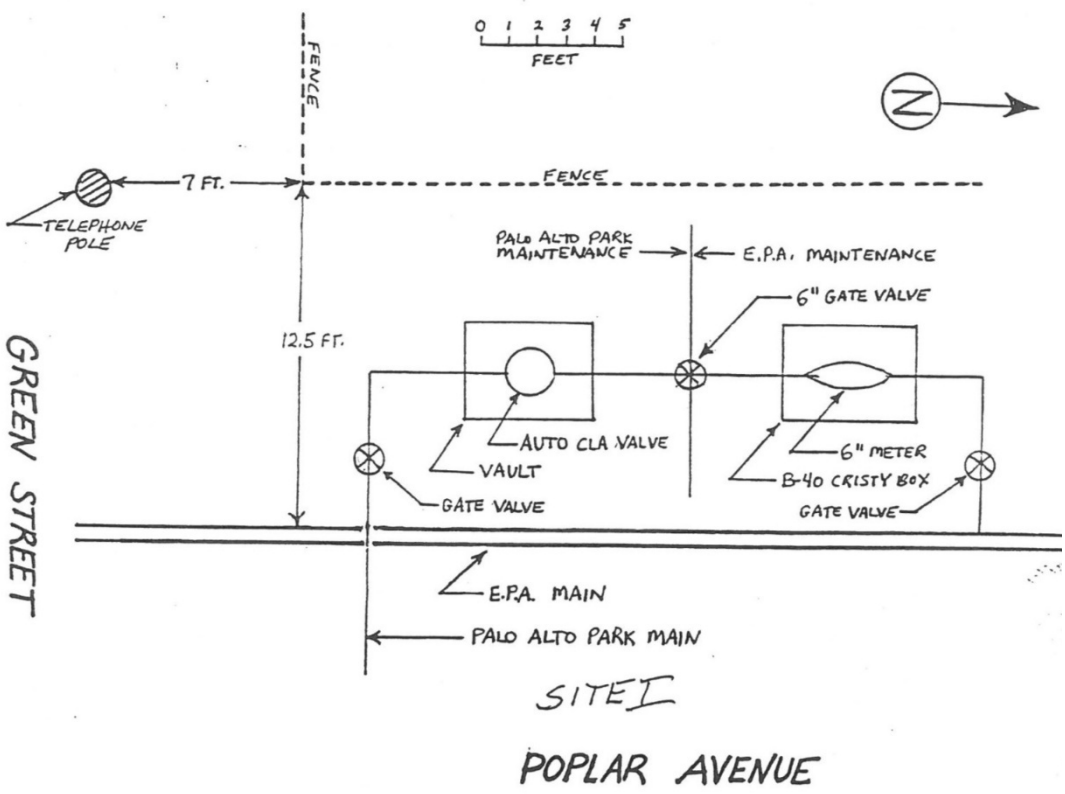

Figure 5.5. Existing intertie between the City of East Palo Alto and PAPMWC.

Historically, the existing intertie between PAPMWC and the City of East Palo Alto was used as an emergency water source for the PAPMWC system. When pressures were extremely low in the PAPMWC system, the East Palo Also system could provide temporary water. To meet PAPMWC's required distribution pressure and flow (including the MDD and fire flow), the City of East Palo Alto must provide a total flow of 1,612 gpm (412 gpm for MDD and 1200 gpm for 2 hours for fire flow). Although this Feasibility Study is focused on meeting the MDD, the fire flow was included here as it would be necessary for the system to meet all regulations.

Multiple scenarios were analyzed in the model to better determine if both POCs and if booster pumps are needed to meet the MDD+ FF requirements:

1. Existing MDD
2. Existing MDD +FF
3. MDD1- Holland Street at Garden Street POC with booster pump
4. MDD1 + FF1- Holland Street at Garden Street POC with booster pump
5. MDD2 Green Street at Poplar Avenue POC with booster pump
6. MDD2 + FF2- Green Street at Poplar Avenue POC with booster pump
7. MDD3- Both POCs without booster pumps
8. MDD3 + FF3- Both POCs without booster pumps
9. MDD4- Both POCs with booster pumps
10. MDD4+ FF4- Both POCs with booster pumps

Based on the model results shown in Table 5-12 and included in Appendix B, and for redundancy purposes, it is recommended to have two points of connection with booster pump stations to meet the required MDD +FF demands and pressure. It is the only model scenario that meets the MDD + FF flow and pressure requirements.

Table 5-12. Model results

Model Scenario	Minimum Pressure (psi)	Maximum Pressure (psi)	Minimum Available Fire Flow (gpm)	Required Booster Pump
Existing MDD	63	70	NA	NA
Existing MDD + FF	20	NA	1,076	NA
MDD1- Holland Street at Garden Street POC with booster pump	69	77	NA	1,612 gpm at 38 ft
MDD1 + FF1- Holland Street at Garden Street POC with booster pump	20	NA	1,014	1,612 gpm at 38 ft
MDD2- Green Street at Poplar Avenue POC with booster pump	70	76	NA	1,612 gpm at 36 ft
MDD2 + FF2- Green Street at Poplar Avenue POC with booster pump	20	NA	1,009	1,612 gpm at 36 ft
MDD3- Both POCs without booster pumps	49	56	NA	NA
MDD3 + FF3- Both POCs without booster pumps	20	NA	956	NA
MDD4- Both POCs with booster pumps	71	78	NA	1,612 gpm at 38 ft and 1,612 gpm at 36 ft
MDD4+ FF4- Both POCs with booster pumps	20	NA	1,230	1,612 gpm at 38 ft and 1,612 gpm at 36 ft

To calculate the pump horsepower the following equation is used:

$$BHP = \frac{Q * TDH}{3960 * E} * SF = \frac{1{,}612 * 38}{3960 * 0.75} * 1.15 = 23.7 = 25\ HP$$

- BHP = break horsepower (HP)
- Q = flow (gpm)
- TDH = total dynamic head (ft)
- E = pump efficiency (75%)
- SF = motor service factor (1.15)

With these parameters, each pump station will consist of two approximately 25-horsepower (HP) dual in-line booster pumps in a secure enclosure to increase the City of East Palo Alto's discharge pressure prior to entering the PAPMWC system. The discharge pressure of the pumps would be approximately 80 psi.

A trailer-mounted diesel emergency generator is recommended to provide standby power for the booster pump stations. This approach offers increased mobility and permitting flexibility, as trailer-mounted units are typically easier to permit through the Air Pollution Control District (APCD) than permanent installations and can be stored at PAPMWC's system site rather than permanently at each booster pump station. The use of a portable generator is more cost effective than installing permanent generators at multiple locations and is appropriate given the low likelihood of simultaneous outages at both booster pump stations. The generator would have a 200 KW, 3-Phase (480/277-Volt), 60 Hz, and 1800 RPM capacity. It would have a 700-gallon diesel exhaust fluid tank (representing 27-hours of run time at 75% load factor) and would be sound attenuated (74 dBA at 23 feet) and weather protective. In addition to purchasing, rental options for trailer-mounted standby generators are available, providing operational flexibility and reducing upfront capital costs. The generator would be transported to the affected booster pump station during a power outage and temporarily connected to the electrical panel, with routine annual maintenance required that is generally less stringent than for permanent standby generators.

Shown below is an example layout of the proposed booster pump stations (plan and elevation) (Figure 5.6 and Figure 5.7). The layout consists of dual mounted booster pumps and motors, electrical panel, pump control panel, piping, valving, pump pads, and building structure.

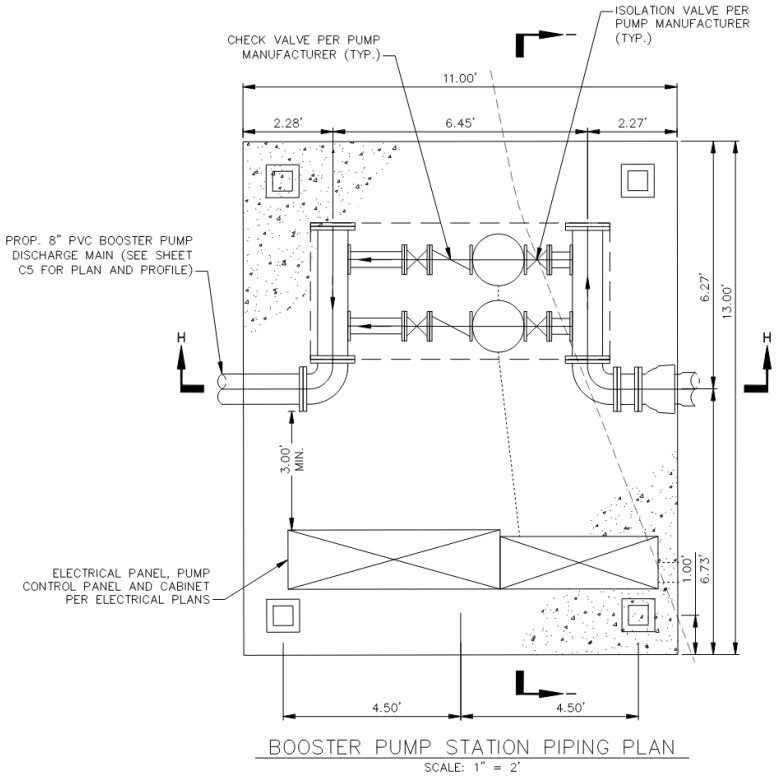

Figure 5.6. Example plan view for the POC booster pump station.

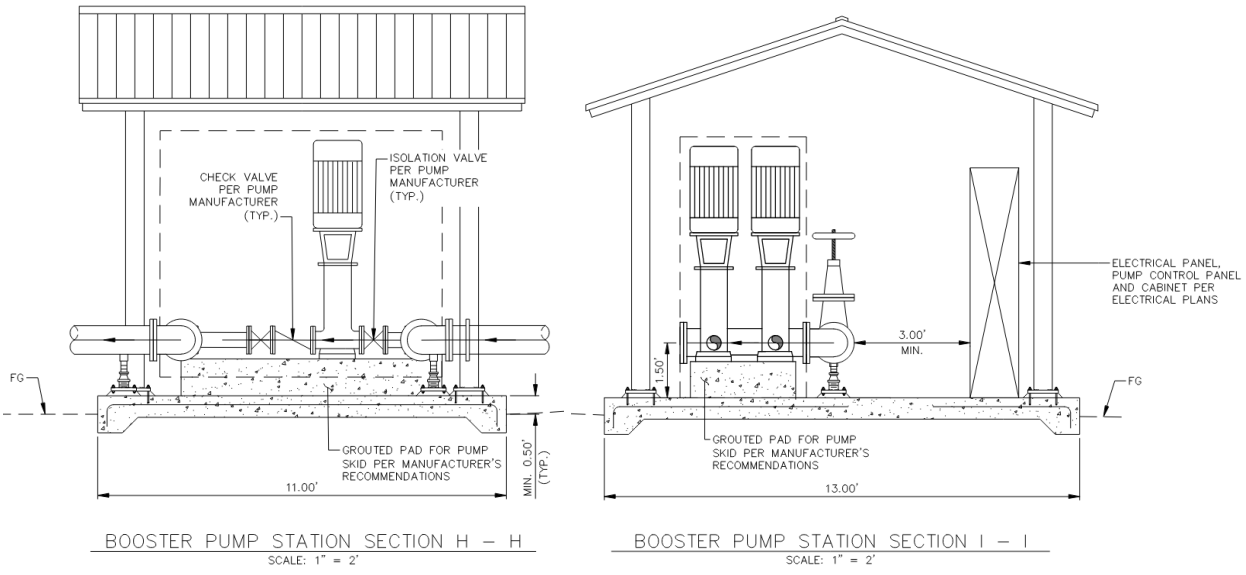

Figure 5.7. Example section for the POC booster pump station.

The civil, structural, mechanical, electrical, and instrumentation and control components and assumptions used in the OPCC for the installation of one new intertie and booster pump station are shown in Table 5-13 below. See Appendix C for the Class 5 Opinion of Probable Cost.

Table 5-13. POCs and booster pump components.

POC & Booster Pump Components		
Discipline	**Item**	**Assumption**
Civil	Demolition of Existing Facilities	Includes pipe removal, utility valve removal, meter pit removal, pavement removal, concrete gutter removal, and disposal
	Excavation, Backfill, & Compaction	Include pipe trench & pump building excavation, backfill and compaction
	New Intertie Connection	Includes 6" AWWA C151 pipe, 6" ultrasonic meter & meter vault, 6" flow control valve & valve vault, 6" gate valve & valve stems,
	Install Bollards	Includes 4" steel pipe, concrete filled
	Road Repair	Includes asphalt concrete pavement & concrete curb and gutter repair.
Structural	Pump Building	Includes footing, walls, and roof
	Pump Slab	Includes 6" thick, 4'x6' slab
Mechanical	Booster Pumps	Includes 50 HP booster pump, associated piping, pipe supports, valving, combination air-valves, and pressure reducing valves.
Electrical	Electrical Service & Meter	Includes electrical cables, electrical panels, service meter, and electrical cabinet
	Emergency Trailer Mounted Standby Generator	Include 200KW trailer mounted generator- rental
Instrumentation & Control	Radio Communications	Includes pump control panel and cabinet
	Variable Frequency Drive	

5.2.3 Pipeline to Tank Design Criteria

In this approach, a pipeline would be constructed to connect the City of East Palo Alto's distribution system to the PAPMWC storage tanks. The existing booster pumps at PAPMWC would then be used to serve the PAPMWC distribution network.

The proposed infrastructure would tie in from Holland Street and Menalto Avenue where the City of East Palo Alto has a 6-inch pipeline. The pipeline would connect to the PAPMWC storage tank at a newly

constructed connection. The City of East Palo Alto's distribution system would be connected via a meter and vault, a flow control valve and vault, and associated piping. The pipeline distance would be approximately 1,200 feet. Similar to the direct connection to the distribution system, roadway restoration will be required following construction. The pipeline components are described in Table 5-14 below. See Appendix D for the Class 5 Opinion of Probable Cost.

Table 5-14. Pipeline components.

Pipeline Components		
Discipline	**Item**	**Assumption**
Civil	Excavation, Backfill, & Compaction	Include pipe trench & pump building excavation, backfill and compaction
	New Intertie Connection	Includes 8" AWWA C151 pipe, 8" ultrasonic meter & meter vault, 8" flow control valve & valve vault, 8" gate valve & valve stems,
	Install Bollards	Includes 4" steel pipe, concrete filled
	Road Repair	Includes asphalt concrete pavement & concrete curb and gutter repair.

Note: 8-inch AWWA C151 pipe has a pressure class rating of 350 psi.

5.2.4 Environmental Impacts

This alternative involves physical consolidation by either constructing new points of connection between two distribution systems or building a new pipeline to the PAPMWC existing tank to provide water to the PAPMWC system. The addition of new piping would require disruption to paved and unpaved areas and affect local traffic. A CEQA review would need to be completed for the project. Under this assessment, the construction and long-term project impacts would be assessed. The initial study assessment under CEQA would determine the type of report needed. Given that the City of East Palo Alto is considered "Not At-Risk" system under the SAFER Dashboard, it is assumed that the physical consolidation may need to complete a Mitigated Negative Declaration, but it may also result in the need for an Environmental Impact Report. The cost of this report is estimated below.

5.2.5 Land Requirements

The land required for this alternative will house each booster pump station at the two POC. It is assumed that each POC and booster pump is to be constructed within the existing right-of-way. No land would need to be acquired for the pipeline as there would be no above ground component.

5.2.6 Construction and Site Considerations

The physical connections to the distribution system and pipeline to the tank options would have similar construction and site considerations. The site of the first POC would repair the existing intertie and add a booster pump. The site for the second POC would be selected based on the final calibrated hydraulic

modeling results, which would allow for the most efficient distribution of water from the City of East Palo Alto.

Based on the two proposed connection sites, a planning footprint of approximately 10 ft × 10 ft is sufficient at each site for the booster pumps. Final dimensions will be refined during design.

The pipeline construction would require less space but may be more disruptive as the pipeline would be constructed along Garden Street to connect to Menalto Avenue and Holland Street to the City of East Palo Alto's existing pipeline. The exact path would be determined during design.

Site/construction considerations include:

- Reinforced concrete meter box
- All-weather access and working clearances around equipment.
- Standard best management practice for dust, noise, and stormwater; permits and DDW plan review during design.

5.2.7 Cost Estimate

The cost estimate under this alternative includes the infrastructure, construction, and planning, engineering, legal, and administrative costs. The studies (discussed in Section 5.2.1) will enable the siting of the second intertie, affordability, and the water quality and capacity issues to be resolved for consolidation. The intertie estimate is shown in Table 5-13 and the pipeline connection is shown in Table 5-14. Details of the construction package can be found in Appendix C. The backup generator cost is assumed to be $435,990 based on a quote from Peterson Power Systems (Cat). Given the high cost of the generator, this cost was excluded from Table 5-15 and a rental option should be pursued.

Table 5-15. Cost Estimate for Alternative 2A (Option 1) – POCs with Booster Pumps

Category	Item	Cost
Infrastructure Capital Costs	POCs and Booster Pumps	$356,800
	Pump Buildings and Concrete Slabs	$110,000
	Electrical Service and Meter	$50,000
	Instrumentation and Control	$30,000
	Decommissioning of Wells (3)	$90,000
Construction Capital Costs	**Subtotal**	**$636,800**
	Overhead and Profit (10% of Subtotal)	$63,680
	Contingency (20% of Subtotal)	$159,200
	Total Construction Capital Costs	**$828,000**
Planning, Engineering, Legal, and Administrative Costs	Planning, Engineering, Legal, and Administrative (15% of Total Construction Capital Costs)	$124,176
	Construction Administration (10%)	$12,418

	Total Cost of Infrastructure (Rounded)	**$965,000**
Additional Studies Required	City of East Palo Alto Capacity Review	$50,000
	Distribution System Water Quality Study	$50,000
	Hydraulic Model Calibration	$50,000
	Affordability Study	$50,000
	Total Cost (Rounded)	**$1,165,000**

Table 5-16. Cost Estimate for Alternative 2A (Option 2) – Pipeline to Tank

Category	Item	Cost
Infrastructure Capital Costs	Pipeline to Tank	$710,100
	Decommissioning of Wells (3)	$90,000
Construction Capital Costs	**Subtotal**	**$800,100**
	Overhead and Profit (10% of Subtotal)	$80,010
	Contingency (20% of Subtotal)	$160,020
	Total Construction Capital Costs	**$1,040,130**
Planning, Engineering, Legal, and Administrative Costs	Planning, Engineering, Legal, and Administrative (15% of Total Construction Capital Costs)	$156,020
	Construction Administration (10%)	$15,602
	Total Cost of Infrastructure (Rounded)	**$1,212,000**
Additional Studies Required	City of East Palo Alto Capacity Review	$50,000
	Distribution System Water Quality Study	$50,000
	Hydraulic Model Calibration	$50,000
	Affordability Study	$50,000
	Total Cost (Rounded)	**$1,412,000**

Additional costs that may be incurred under this alternative that were not included in the cost estimate but will need to be determined if this alternative is selected. These costs include:

- Rental cost for backup generator
- Potential value of existing PAPMWC assets
- Administrative costs associated with SFPUC water source
    - Administrative updates related to the City of East Palo Alto receiving SFPUC water, such as revising existing contracts, developing external services agreements, etc., would need to be completed by the responsible parties and may result in additional costs for those parties.
    - The portion of PAPMWC in the City of East Palo Alto is likely already on the SFPUC service area map for East Palo Alto, but the area served by Menlo Park is not. Therefore, a service area map update would likely be required.

- Cost of certain governance process changes (Prop 218, other)

Meter costs were excluded from the cost assessment as discussed under Alternative 1.

5.2.8 Advantages and Disadvantages

Under this approach, PAPMWC would be subsumed by the City of East Palo Alto, the municipal water service provider. This would resolve the capacity issue for PAPMWC and likely provide economies of scale for management and treatment. One of the main disadvantages of this approach is the number of unknowns that still need to be resolved before moving forward with this alternative. Of these unknowns, the ability of the City of East Palo Alto to source sufficient supplies from SFPUC to provide for PAPMWC customers is a primary question that needs to be resolved.

Table 5-17. Advantages and Disadvantages of Alternative 2A.

Advantages	Disadvantages
• Consolidation may improve economies of scale and support effective and efficient utility management. • City of East Palo Alto is considered a "Not At-Risk" water system under the SAFER dashboard. • Consolidation would ensure that PAPMWC customers are served with high quality water services. • Consolidation may support transparency in customer services, particularly related to billing, as water services would be managed by a public agency with a strong track record of positive customer service. • The City of East Palo Alto is interested in exploring this option. The City of East Palo Alto perceives it's role as a municipal agency to provide equal water services to all its residents.	• Ensuring water supply capacity from SFPUC is sufficient to serve additional customers may be difficult • Has the potential to increase costs for PAPMWC residents • PAPMWC assets may incur deferred maintenance costs for the City of East Palo Alto. The impacts of these costs may be mitigated by the formation of an assessment area, as an interim or long-term solution. • Residents in PAPMWC service area would be almost entirely reliant upon imported water. • Menlo Park residents in the PAPMWC service area may not have a mechanism to be represented in decisions about their water services, as City of East Palo Alto is governed by the City Council of the City of East Palo Alto. Note that this is not unusual in San Mateo County as many areas are served public services via an external service agreement. Some of these areas have developed advisory bodies or other mechanisms to ensure representation. • Community members may not trust tap water due to extraneous factors. Thus, treatment may not improve the communities willingness to utilize tap water. See Section 6.

5.3 ALTERNATIVE 2B INTERIE OR INTERCONNECTION

5.3.1 Description

Alternative 2B evaluates the feasibility of an intertie or interconnection with the City of East Palo Alto which does not include physical consolidation. Under Alternative 2B, PAPMWC would purchase water from the City of East Palo Alto. The water would be transferred to PAPMWC via two interties or a new pipeline. PAPMWC would continue to operate the system, maintain all infrastructure, and manage fiscal matters, including billing and customer service.

As described in Alternative 2A, the City of East Palo Alto purchases most of its potable water from the SFPUC Regional Water System (2.09 MGD) with some capacity available to them from the Gloria Way Well.

In order to evaluate the feasibility of Alternative 2B, the same assumptions as 2A were made:

- The existing wells owned and operated by PAPMWC would be decommissioned and destroyed.
- Options for connection via two interties to feed the distribution system directly or a pipeline to the storage tank.
    - The two interties would be built to connect the City of East Palo Alto's water system directly with the existing distribution system of Palo Alto Park Mutual Water Company.
    - The pipeline would feed the existing storage tank and water would subsequently be distributed via the existing PAPMWC booster pumps.
- City of East Palo Alto would identify a source to provide the additional water capacity needed to service new customers in PAPMWC.

Additional studies would be needed prior to an agreement including siting of the second intertie via approved and calibrated hydraulic modeling, affordability of the new source, the water quality impact on the PAPMWC distribution network and the available capacity from SFPUC to supply the City of East Palo Alto.

To understand the impact of these changes, including meter costs, on PAPMWC customer rates, a Capital Improvement Plan would need to be developed alongside an evaluation of the total O&M costs for PAPMWC. The Capital Improvement Plan would include information on the useful life of each piece of infrastructure that PAPMWC owns. With this information, a new rate could be set. Again, as with Alternative 2A, the following are considerations that were not analyzed as part of this feasibility study, but which should be if this option is pursued:

- The impact of new SFPUC water on affordability.
- The feasibility of retaining PAPMWC's existing wells as a backup or standby source was not evaluated as these wells are assumed to have exceeded their useful life or would require treatment to be used. The redundancy provided by a new well, e.g., Well #3R, could yield increased resiliency.
- During listening sessions (see section 4.4), some members of the community expressed frustration with customer service provided by PAPMWC. A master meter consolidation would not

address those concerns. Addressing customer service concerns is outside of the scope of this feasibility study but should be considered as part of any solution (see Section 6).

5.3.2 Intertie or Interconnection Design Criteria

The intertie configuration or pipeline design criteria described in Section 5.2.2 and 5.2.3 apply to this alternative.

5.3.3 Environmental Impacts

Similar to Alternative 2A, this alternative involves constructing two new interties or a new pipeline.

5.3.4 Land Requirements

The same land requirements exist as in Alternative 2A, outlined in Section 5.2.5.

5.3.5 Construction and Site Considerations

The same considerations would be undertaken as in Alternative 2A, outlined in Section 5.2.6.

5.3.6 Cost Estimate

The cost estimate under this alternative includes the construction of new interties and decommissioning of the existing wells. In addition, there are several studies that need to be completed to assess the impact of the new water source on the operation of the existing City of East Palo Alto system and on the PAPMWC distribution system (outlined in Section 5.2.7). The total costs, summarized from Table 5-15 and Table 5-16 are shown in Table 5-18.

Table 5-18. Cost Estimate for Alternative 2B- Interties or Interconnections.

Item	Unit	Cost
Total Intertie Cost from Alternative 2A- Option 1 (Rounded)		**$1,165,000**
Total Pipeline Cost from Alternative 2A- Option 2 (Rounded)		**$1,412,000**

Additional costs that may be incurred under this alternative that were not included in the cost estimate but will need to be determined if this alternative is selected. These costs include:

- Administrative costs associated with SFPUC water source
    - Administrative updates related to the City of East Palo Alto receiving SFPUC water, such as revising existing contracts, would need to be completed by the responsible parties and may result in additional costs for those parties.
    - The portion of PAPMWC in the City of East Palo Alto is likely already on the SFPUC service area map for East Palo Alto, but the area served by Menlo Park is not. Therefore, a service area map update would likely be required.

As was discussed under Alternative 1 and 2A, the cost of adding meters will be incurred by the new system. However, this cost was not included here as it would be present regardless of the outcome of this evaluation.

5.3.7 Advantages and Disadvantages

Under this approach, PAPMWC would remain as an independent entity and buy water from the City of East Palo Alto. This would resolve the capacity issue for PAPMWC but would not provide the economies of scale for management and treatment. Similar to Alternative 2A, there remain many unknowns that must be resolved. However, there are fewer barriers to overcome compared to Alternative 2A as the governance issue is eliminated.

One of the main disadvantages of this approach is the question of additional capacity from the City of East Palo Alto.

Table 5-19. Advantages and Disadvantages of Alternative 2B- Interties or Interconnections.

Advantages	Disadvantages
• The intertie or interconnection would ensure that residents of Palo Alto Park are provided water that meets all regulatory requirements and drinking water standards. • The intertie or interconnection is anticipated to require significantly less time to implement as compared to a physical consolidation. • The intertie or interconnection could, if desired, be pursued as an interim step prior to pursuing physical consolidation. • During the listening sessions, some members of the community shared that they perceive PAPMCW as a community asset and they are proud to have local mutual water company which has been operating in East Palo Alto since 1924.	• Ensuring water supply capacity from SFPUC is sufficient to serve additional customers may be difficult • Has the potential to increase costs. A Capital Improvement Plan is needed to establish rates. • May face significant political challenges that could increase costs, decrease community trust in the project, and/or delay timelines. • Residents in the PAPMWC service area would be almost entirely reliant upon imported water, in lieu of locally sourced groundwater. • During listening sessions (see Section 4.4), some members of the community expressed frustration with customer service provided by PAPMWC. The intertie or interconnection would not address those concerns. • Community members may not trust tap water due to extraneous factors. Thus, a consolidation may not improve the community's willingness to utilize tap water.

6.0 REVENUE SUFFICIENCY ANALYSIS

The Revenue Sufficiency Analysis (RSA) evaluates the long-term financial impacts of the water supply alternatives considered in this Feasibility Study and identifies the rate revenues necessary to support ongoing operations, debt obligations, capital improvements, and reserve funding. Using a 10-year financial planning model the analysis assesses the financial sustainability of each alternative by projecting future costs and required water rate revenue adjustments corresponding to each of the alternatives.

6.1 OBJECTIVES

The primary objectives of this Analysis are to:

I. Develop a multi-year financial management plan that provides for the alternative scenarios' operation and capital funding needs;
    a. Alternative 1 – Treatment and New Well at PAPMWC
        i. Assumes Well #7 is partially funded with existing loan proceeds and partially bond funded
        ii. Assumes the full-system capacity is partially funded with existing loan proceeds and partially bond funded
    b. Alternative 2B – Intertie or Interconnection
        i. Assumes the Point of Connection (POC) with Booster Pumps is partially funded with existing PAPMWC loan proceeds and partially bond funded
        ii. Assumes the Pipeline to Tank is partially funded with existing PAPMWC loan proceeds and partially bond funded or cash funded

II. Identify future rate revenue adjustments based on a Revenue Sufficiency Analysis (RSA) that will provide adequate revenues to meet ongoing financial requirements under each of the alternatives considered.

6.2 ANALYSIS METHODOLOGY

This Analysis provides an RSA for Alternatives 1 and 2B, including scenarios for each alternative. It does not provide a full rate study for any alternative and it does not suggest any changes to PAPMWC's current rate structure. It also does not evaluate Alternative 2A as the analysis of Alternative 2A would require negotiations with the City of East Palo Alto that are premature at this time.

6.2.1 Financial Revenue Sufficiency Analysis

The Analysis began with development of a ten-year financial management plan that was used to determine the level of annual rate revenue required to cover projected annual operating expenses, outstanding debt service, and developing adequate operating and capital reserves.

The Analysis was conducted using the revenue sufficiency and financial planning module of Stantec's Financial Analysis and Management System (FAMS) modeling system for each of the scenarios

considered. Stantec routinely uses FAMS as the foundation for revenue sufficiency analyses. Using FAMS, a ten-year financial management plan was developed for each alternative, including projected annual revenue requirements and corresponding annual water rate adjustments.

6.3 FINANCIAL PLAN

This section presents the financial management plans and corresponding plan of water rate adjustments developed in the RSA. The first sections include a description of the source data and assumptions input into the FAMS financial model and reflected in the RSA. **Appendix E through Appendix I** includes detailed schedules supporting the financial plan discussed for each alternative scenario. Based on the data and assumptions, the RSA determines the overall percentage rate increases needed to maintain sufficient revenues for each of the Alternatives and scenarios analyzed.

6.3.1 Data & Assumptions

PAPMWC operates on a July 1 – June 30 fiscal year (FY) calendar. PAPMWC staff provided historical financial information associated with operation of the water system, along with budget data for FY 2024 - 25 (July 1, 2024 - June 30, 2025) and an adopted budget for FY 2025-26 (July 1, 2025 - June 30, 2026). Operating and capital reserve target assumptions were established and adjusted at Stantec's suggestion and described in this section of the report.

6.3.2 Beginning Fund Balance

The ending cash balances for FY 2024-25 were provided by staff to establish the FY 2025-26 beginning balances in the rate revenue analysis model.

6.3.3 Rate Revenues

Rate Revenue is the revenue generated from customers for water service. PAPMWC's current rate revenue is received in the form of a uniform fixed charge per account holder, currently $97 per month.[1] Rate revenue in the financial plan in this Analysis is based on:

- FY 2025-26 budgeted rate revenues for PAPMWC of $932,700
- Beginning in FY 2026-27, uncollected revenue is forecasted at 1.5% of total rate revenue to account for estimated anticipated unpaid bills.

Budgeted and projected revenues are listed in detail in Schedule 2 of **Appendix E through Appendix I**.

6.3.4 Non-Rate Revenues

In addition to rate revenue, PAPMWC receives a limited amount of non-rate revenue related to miscellaneous service fees and interest revenue on investments. The PAPMWC projections of all non-rate revenues of about $32,000 were based on FY 2025-26 budgeted revenues with the exception of

[1] For every 2,500 square feet of lot size, accounts are charged an additional $2 per month.

PAPMWC's interest income (see Section 6.3.4.1 below). Budgeted and projected non-rate revenues are listed in detail in Schedule 2 of **Appendix E through Appendix I**.

6.3.4.1 Interest Earnings on Invested Funds

PAPMWC has been tracking interest earnings generated by investments and reserve accounts established by the system. The current annual interest revenue is approximately $35,000. However, the annual amount may change as the reserve accounts are used.

6.3.5 Existing Loan Debt Payments

PAPMWC has existing debt payment requirements from one outstanding loan from the Small Business Administration (SBA), an agency of the U.S. Government. The annual debt payment is $80,568 and the remaining total balance for the loan, as of June 2026 per the repayment schedule is $1,425,634.94. The initial amount for the loan was $1,545,200 in October 2021, and the loan will be repaid in full in 2050. According to PAPMWC staff, the SBA loan was initially obtained to fund an iron/manganese treatment facility and approximately $1,200,000 remains. However, Well 3 failed before the design of the Fe/Mn treatment facility was initiated and as a result the loan has been redirected towards the replacement/rehabilitation of Well 3.

6.3.6 Expenses

Total expenses for FY 2025-26 are estimated to be $876,000. Future operating expenses are projected based upon budgeted expenditures for FY 2025-26 and adjusted for inflation using cost escalation factors, shown in Table 6-1 below. Under Alternative 2B, it is assumed that PAPMWC will no longer cover chlorination-related costs and will benefit from other cost efficiencies of an intertie connection. At the time of this Analysis, additional cost efficiencies were not identified as they will depend on decisions made following project selection. Budgeted and projected operating expenses are listed in detail in Schedule 3 of **Appendix E through Appendix I**.

6.3.7 Cost Escalation

Annual cost escalation factors for the various types of expenses were developed based upon a review of historical inflation trends, published inflation forecasts, and industry experience. Fuel and utility costs are assumed to increase at above-normal rates in the near term, from FY 2027 through FY 2029, to reflect recent upward price trends. Table 6-1 summarizes the cost escalation factors used to project assumed increases across expense categories. Categories not specifically identified are escalated by the default inflation factor.

Table 6-1. O&M Cost Escalation Factors

Category	FY 2027 - 2029	FY 2030 - 2036
Salaries & Wages	3.0%	3.0%
Employee Benefits	2.0%	2.0%
Repair & Maintenance	2.0%	2.0%

Fuel, Utilities, Chemicals	6.0%	3.0%
Default Inflation Factor	2.5%	2.5%

6.3.8 Reserve Targets

Cash reserves for utilities are balances retained for specific cash flow needs. The target for reserves is a critical component when developing a multi-year financial plan; utilities rely on the reserves for financial stability, credit rating agencies evaluate utilities in part on their adherence to formally adopted reserve targets, and lending agencies require utilities to maintain specific debt service reserves for outstanding loans. The process described below supported the RSA.

The RSA model for PAPMWC reflects Stantec's following recommendations:

Operations & Maintenance Reserve – The model sets a recommended minimum balance equal to 90-days throughout the projection period. This level of operating reserve helps to maintain a continuity of service in the event of short-term changes in cash flow or sudden unexpected increases in operating costs. Because this reserve target is set relative to each water system's operating budget, the target will change as the expenses change. PAPMWC's FY 2025-26 budget for O&M expenses totals about $876,000, resulting in a target Operating Reserve balance of approximately **$219,000**.

Capital Reserve – PAPMWC reported that its Board of Directors has not adopted a formal capital improvement program. PAPMWC does have reserves set aside for two projects, the potential intertie or interconnection with the City of East Palo Alto and repairs for the pump station. However, it is prudent to begin setting aside some level of a yearly capital reserve in case there is a need to repair or replace minor infrastructure components that have not been identified. Hence, the financial model additionally sets an annual capital reserve target equal to $10,000 a year over ten years, beginning in FY 2027-28.

6.3.9 Borrowing Terms

The financial model is capable of developing a capital funding plan based on the dynamics of each financial scenario. This allows the model to calculate future borrowing and can incorporate debt service on future borrowing based on projected borrowing terms. One form of borrowing was considered as part of this analysis – revenue bonds – and the following debt financing assumptions reflect bond financing. Actual debt service will vary depending on the availability of financing and the specifics of the loan or bond financing available at the time.

Debt service for future revenue bonds was calculated based on borrowing needs each year, and the following assumed borrowing terms:

- Amortization Period: 30 Years
- Interest Rate: 5.0%
- Cost of Issuance: 2.0%
- Debt Service Reserve: 1-year of debt service

6.3.10 Scenario Analysis

Based on the data and assumptions described above, multiple scenarios were developed to understand the water rate impacts associated with funding each project. The rate increases were calculated by the model as "just-in-time" rate increases to meet the revenue needs in each year based on the various dynamics of each scenario. Recommended rate adjustments were developed to meet annual revenue requirements while maintaining financial stability. This analysis assumes that approximately $1,200,000 of the SBA loan is available to be used for all of the following scenarios.

All capital and O&M cost assumptions are derived from Section 5.1.10 for Alternative 1, see Table 5-9. Alternative 2B total costs for the projects for both Option 1 and 2 are derived from Table 5-15 and Table 5-16 outlined in Section 5.2.7.

6.3.11 Alternative 1 – Scenario 1: Partial Bond Financing for Well #7

As described in Section 5.1.10, the total construction cost for only Well #7 is $2,011,00. This analysis estimates that the project will be completed in FY 2027-28. The annual O&M costs for the Well is about $43,000. Under this scenario PAPMWC would need to borrow an additional $861,330 to fund the project. This results in an annual new debt service of about $61,200 per year, in addition to the existing SBA Loan repayment. Table 6-2 presents the recommended rate revenue adjustments for only the Well #7 Project.

Table 6-2. Recommended Water Rate Revenue Increase for the Well #7 Project

Rate Revenue Adjustment Date	Rate Revenue Adjustment
July 1, 2027	20.0%
July 1, 2028 – July 1, 2036	2.5% Annually

6.3.12 Alternative 1 - Scenario 2: Partial Bond Financing for the Full-System Capacity

As described in Section 5.1.10, the total construction cost for the Full-System Capacity is $2,734,000 and estimated to be completed in FY 2027-28. The annual O&M costs for the Well is estimated at $70,000 under this scenario. The gallons per minute size of the Full-System is more than double the size of Well #7, resulting in the overall system and annual treatment costs to be higher. Under this scenario PAPMWC would need to borrow an additional $1,606,000 to fund the project. This results in annual new debt service of about $114,200 per year, in addition to the current annual SBA Loan repayment. Table 6-3 presents the recommended rate revenue adjustments for the Full-System Capacity Project.

Table 6-3. Recommended Water Rate Revenue Increase for the Full-System Capacity Project

Rate Revenue Adjustment Date	Rate Revenue Adjustment
July 1, 2027	30.0%
July 1, 2028 – July 1, 2036	2.5% Annually

6.3.13 Alternative 2B (Option 1) - Scenario 1: Partial Bond Financing for the Point of Connection with Booster Pump

As described in Section 5.2.7, the total infrastructure cost for the first option – POCs with Booster Pump is $1,165,000 and estimated to be completed in FY 2027-28. The cost of purchasing water from the City of East Palo Alto will need to be negotiated between systems, but for the purposes of this Analysis it was assumed that the maximum cost of purchase water is $1,200,000 based on East Palo Alto's current water rates.[2] Under this scenario PAPMWC would not need to borrow any additional amount to fund the project because of the remaining funds available from the SBA loan and a $200,000 reserve that PAPMWC set aside only for this alternative. Table 6-4 presents the recommended revenue adjustments under this scenario for Alternative 2B. Rates will need to be increased by a significant amount due to the significant cost of purchasing water that this Analysis assumes. The rate revenue adjustment percentage may be lower if the negotiated price to purchase water is lower than $1.2 million.

Table 6-4. Recommended Water Rate Revenue Increase for the POCs with Booster Pump

Rate Revenue Adjustment Date	Rate Revenue Adjustment
July 1, 2027	143.0%
July 1, 2028 – July 1, 2036	2.5% Annually

6.3.14 Alternative 2B (Option 2) - Scenario 2: Partial Bond Financing for the Pipeline to Tank

As described in Section 5.2.7, the total infrastructure cost for the second option – Pipeline to Tank is $1,412,000 and estimated to be completed in FY 2027-28. The cost of purchasing water from the City of East Palo Alto will need to be negotiated between systems, but for the purposes of this Analysis it was assumed that the maximum cost of purchase water is $1,200,000 based on East Palo Alto's current water rates. Under this scenario PAPMWC would need to borrow an additional $44,400 to fund the project. This results in annual new debt service of about $3,200 per year, in addition to the annual SBA Loan

[2] Rates posted as of March 1, 2025 as found on the East Palo Alto's Website, operated by Veolia Water. https://www.eastpaloaltowater.com/pages/customer-service/rates/. Website referenced on July 15, 2026.

repayment. Table 6-5 presents the recommended revenue adjustments under this scenario for Alternative 2B. Similar to Scenario 2 Option 1 above, rates will need to be increased significantly because of the cost to purchase water from the City of East Palo Alto.

Table 6-5. Recommended Water Rate Revenue Increase for the Pipeline to Tank

Rate Revenue Adjustment Date	Rate Revenue Adjustment
July 1, 2027	143.0%
July 1, 2028 – July 1, 2036	2.5% Annually

6.3.14.1 Alternative 2B (Option 2) – Scenario 2B: Revenue Funding for the Pipeline to Tank

A sub-analysis was completed under this scenario, due to the unlikeliness that PAPMWC would obtain a $44,400 bond. This sub-analysis assumes that the system will use the remaining available balance of the SBA Loan, the cash reserve set aside for this Alternative, and cash fund the remainder of the infrastructure costs. Table 6-6 shows the recommended rate revenue under this sub-analysis.

Table 6-6. Recommended Water Rate Revenue Increase for the Pipeline to Tank (Cash Funded)

Rate Revenue Adjustment Date	Rate Revenue Adjustment
July 1, 2027	147.0%
July 1, 2028 – July 1, 2036	2.5% Annually

6.3.15 Water Bill Affordability

Customer affordability was evaluated by measuring the typical monthly bill as a percentage of Median Household Income (MHI). A full rate study was not completed, so the MHI was estimated based on PAPMWC's current rates and overall rate increases indicated by the RSA. For the purposes of this Analysis, the system-wide average residential bill assumes a monthly water usage of 6 hundred cubic feet (HCF), consistent with the monthly amount assumed by the State Water Board for its SAFER affordability calculations. Table 6-7 shows the water bill affordability calculations using the State Water Board assumptions.

Table 6-7. PAPMWC Affordability Data (Based on FY 2027-28 Rate Revenue Adjustment)

	Alternative 1 - Scenario 1	Alternative 1 - Scenario 2	Alternative 2B - Scenario 1 & 2	Alternative 2B - Scenario 2B
Monthly Total Water Bill (based on 6 HCF)	$121	$131	$245	$249
State PAPMWC MHI	$96,378	$96,378	$96,378	$96,378
% MHI	1.51%	1.63%	3.05%	3.10%
Stantec Estimated PAPMWC MHI	$50,000	$50,000	$50,000	$50,000
% MHI	2.90%	3.14%	5.88%	5.98%

PAPMWC currently has a MHI of $96,378 based on data generated by the Division of Drinking Water (DDW) and published to the SAFER Dashboard. For Alternative 1 – Scenario 1- The financial burden place on residential customer was evaluated based on the recommended future rate increases, yielding a monthly bill for a residential customer with a 5,000 sq. feet home of $121. This bill was then multiplied by 12 to reflect annual billing of $1,452, resulting in approximately 1.51%. The same methodology was applied to the other three scenarios to calculate the percentage MHI. According to the State Water Board's Water System Financial Capacity & Community Affordability Dashboard, a percentage MHI below 1.5% is not considered a financial burden to customers, percentages that are between 1.5% and 2.5% are considered a medium burden, and anything above 2.5% is a high burden.

The Analysis also considered the possibility that the MHI published by DDW for PAPMWC overstates the income level of the community. A small part of Palo Alto Park is located near Menlo Park and Palo Alto, which are substantially more affluent, although Palo Alto Park itself is not. Accordingly, an additional affordability evaluation was performed using an assumed MHI of $50,000 for comparison purposes. At this lower MHI, all evaluated scenarios exceed 2.50% of MHI and would be considered a high financial burden.

7.0 ALTERNATIVES COMPARISON

PAPMWC will need to evaluate the proposed alternatives and determine next steps. A summary of the advantages and disadvantages is presented in Table 7-1 and the costs are shown in Table 7-2. Two costs are presented under Alternative 1 including treatment for Well #7 and treatment for the full-system flow. The choice between these two alternatives would be determined based on the water quality of the proposed Well #3R. Similarly, Alternative 2A and 2B each have two infrastructure costs, one for two POCs/interties and one for a pipeline to connect to the PAPMWC storage tanks.

Table 7-1. Summary of Alternatives.

	Alternative 1 - Treatment and New Well	Alternative 2A - Physical Consolidation	Alternative 2B - Interties or Interconnections
New Construction	Manganese Treatment; New Well	Two POCs to connect water from City of East Palo Alto	Two Interties to connect water from City of East Palo Alto
Impact on Distribution System	Limited, but system would likely require flushing post-treatment	Study Required: Potential for release of iron, manganese, lead and/or copper due to switch in water quality	Study Required: Potential for release of iron, manganese, lead and/or copper due to switch in water quality
O&M Needs	New treatment would require operator time, additional testing, and sludge disposal	O&M would become the responsibility of City of East Palo Alto	O&M of the distribution system would remain with PAPMWC
Primary Advantage	Allow PAPMWC to remain independent and provide water that meets both the MCLs and SMCLs	Consolidation may improve economies of scale and support effective and efficient utility management.	Allow PAPMWC to remain as an entity and provide water that meets both the MCLs and SMCLs
Key Considerations	Significant investment in Well #7 which may itself have additional infrastructure needs	Unknown if City of East Palo Alto has capacity from SFPUC to supply PAPMWC	Unknown if City of East Palo Alto has capacity from SFPUC to supply PAPMWC
Community Impact	Would not resolve billing and customer service concerns	Consolidation may not improve the communities willingness to utilize tap water	Would not resolve billing and customer service concerns; Consolidation may not improve the communities willingness to utilize tap water

Table 7-2. Anticipated Cost of Alternatives.

	Alternative 1 - Treatment and New Well	Alternative 2A - Physical Consolidation	Alternative 2B - Interties or Interconnections
Cost	**$2,011,000 (Well #7 + Well #3R)** **$2,734,000 (Full-System Treatment + Well #3R)**	**$1,165,000 (Two POCs)** **$1,412,000 (Pipeline)**	**$1,165,000 (Two Interties)** **$1,412,000 (Pipeline)**
Annual O&M Costs	**$43,000 (Well #7)** **$70,000 (Full-System Treatment)**	Assumed to be equivalent to City of East Palo Alto water rates. Note – water rates are expected to be updated due to costs associated with consolidation.	Assumed to be equivalent to PAPMWC water rates. Note – water rates are expected to be updated due to costs associated with consolidation.
Customer Cost Impact	Estimated increase of 20% (Well #7) or 30% (Full-System Capacity)	Alternative was not analyzed at this time	Estimated increase of 143% (POCs and Pipeline) or 147% (Cash funded Pipeline)
Additional Costs Not Included	-	Potential value of existing PAPMWC assets; Cost of obtaining additional source capacity through SFPUC	Cost of obtaining additional source capacity through SFPUC
Additional Information Required for Rate Assessment	Capital Improvement Plan, PAPMWC system operation and maintenance costs	Rate increase implemented by City of East Palo Alto to cover SFPUC capacity increase and interconnection of systems	Capital Improvement Plan, PAPMWC system operation and maintenance costs

7.1 RECOMMENDATIONS FOR COMMUNITY OUTREACH AND EDUCATION

For any of the alternatives, additional community outreach and education is recommended. During the listening sessions, interviewees suggested that any successful alternative would need to be paired with community engagement, as well as trust building efforts between the community and water system(s) involved.

Some methods of enhanced community outreach and education are included below for consideration. These methods were identified by interviewees during listening sessions.

1. Conduct a community outreach campaign to increase awareness of tap water quality:
   a. Work with a local NGO or community partner to implement a community outreach campaign to increase residents' awareness of tap water quality in their area. Campaign topics may include information regarding tap water regulations, local tap water quality, and state and local resources available to residents to better understand their tap water.
2. Support hybrid public meetings
   a. If Alternative 1 or 2B is pursued, host all PAPMWC board and member meetings via a hybrid platform to enable active participation both virtually and in person. This would increase opportunities for residents to engage directly with PAPMWC leadership.
3. Implement online bill pay and customer service phone line
   a. If Alternative 1 or 2B is pursued, implement online billing and online bill pay options. This would enable customers to review their bills online, track the status of their payments, and pay online.
   b. If Alternative 1 or 2B is pursued, implement a customer service phone line that streamlines submission of customer requests with a response time goal of 48 hours.
4. Develop additional outreach methods in case of emergency, such as a text-blast or similar.
   a. If Alternative 1 or 2B is pursued, work to obtain additional direct communication channels with customers, including a service to send text blast messaging to customers who elect to join the service. The text blasts would alert customers to service notices or emergencies.
5. Conduct a community outreach campaign regarding Alternative 2A- physical consolidation benefits and potential impacts.

8.0 References

American Water Works Association (AWWA), 2015. Iron and Manganese Removal Handbook, Second Edition. Denver, CO.

California State Water Resources Control Board, Division of Drinking Water. (n.d.). Secondary maximum contaminant levels (Title 22, §64449).

County of San Mateo, 2018. San Mateo Plain Groundwater Basin Assessment. Prepared by EKI Environment and Water, Todd Groundwater, and Hydrofocus,

Dobbin, K.B., Pierce, G., McBride, J., 2025. Recent Trends in Water System Consolidation: Lessons from California. Journal AWWA, 117 (5), 10-17.

East Palo Alto Water, 2025. Rates and Fees. https://www.eastpaloaltowater.com/pages/customer-service/rates/. Accessed: 12/19/2025.

Palo Alto Park Mutual Water Company (PAPMWC), 2025. Rate Structure. https://www.papmwc.org/water-rates. Accessed: 12/19/2025.

Safe and Affordable Funding for Equity and Resilience (SAFER) Dashboard. 2025 Drinking Water Needs Assessment. https://www.waterboards.ca.gov/drinking_water/certlic/drinkingwater/saferdashboard.html. Accessed 12/19/2025.

California Senate Bill (CA SB) No. 552. Hertzberg. Drought planning: small water suppliers: nontransient noncommunity water systems. California Legislature, Assembly (2021).

Water Research Foundation (WRF) 4703, 2021. Long Term Vulnerability Assessment and Adaptation Plan for the San Francisco Public Utilities Commission Water Enterprise - Phase I. Prepared by Casey Brown, Francois Baptiste, Alexa Bruce, Hassaan Khan, Khanh Nguyen, Don Park, David Rheinheimer, Umit Taner, and Sungwook Wi.

APPENDICES

Appendix A PAPMWC PILOT STUDY

ATEC
SYSTEMS ASSOCIATES

DATE: May 17, 2021

TO: Niambi Lincoln, General Manager
Palo Alto Park Mutual Water Co.
2190 Addison Ave.
East Palo Alto, CA. 94303-1434

FROM: Cullen J. Wilder, P.E.[1]

SUBJECT: Summary of Pilot Testing, East Palo Alto Park Mutual Water System, Well 7

On May 5, 2021, we pilot tested Well 7 belonging to the East Palo Alto Park Mutual Water System. The purpose of the pilot test was to determine the efficacy of the ATEC system in removing manganese from the water produced by this well and to identify the optimal ATEC filtration equipment for treatment that will reliably remove this secondary contaminant to less than its Secondary Maximum Contamination Level (SMCL) set by the USEPA of 0.05 mg/L.

The treatment system is to have a capacity of 750 gpm.

The pilot filter system is designed to simulate actual operation of an ATEC filter system on a small scale in terms of retention, media depth, flow per cubic foot of media, flow per square foot of media (loading rate) and so forth. During the pilot testing the pilot trailer's field lab was used to determine chlorine, iron, manganese, hydrogen sulfide (H_2S) and ammonia concentrations in the raw and finished water.

Excellent pilot test results were attained for well 7. Based on these results, an ATEC filter system comprised of (6) 48-inch filters with 60-inch sidewalls filled with 42-inches of Pyrolox ™Advantage media is recommended. The system would be delivered on two skids, with piping, manifolds, valves. underdrain and underdrain support factory installed. Preliminary plans for the recommended system are given in this report.

The remainder of the report discusses the pilot testing and the recommended system. This report is meant to summarize and document the results of the pilot testing and the basis for the recommended systems. This pilot test report should be helpful in preparing a Technical report that might be required by the State of California Division of Drinking Water but is not meant to satisfy their requirements.

General Description of the ATEC Iron, Manganese and Arsenic Removal Process

ATEC Systems uses pyrolusite based media for its high-rate arsenic, iron, and manganese removal systems. The iron is oxidized to its insoluble state and filtered while the manganese is adsorbed on the surface of the media where it is secured and oxidized in place. Chlorine is injected immediately upstream of the filters. The chlorine is used to oxidize the iron and to maintain the filter bed in an oxidized state, not to oxidize and precipitate the manganese as is the case with most other treatment systems.

[1] Registered in CA and WA

In this pilot test, chlorine was introduced to the influent ahead of four 6-inch diameter filter columns with 60-inch filter sidewalls. The filters are manifolded together at the inlet and outlet and filled with 42-inches of Pyrolox Advantage Filter Media. The pilot test characteristics are given in the Appendix.

Pilot testing results for the wells are tabulated in Tables 1 and 2 and shown graphically in Figures 1, 2, and 3 of this report.

Pilot Test Results

A total of 12 samples were taken on a half-hourly basis until the end of the test.

The average loading rate was 9.56 gpm/sf.

Raw water manganese concentrations were consistent and averaged 0.060 mg/L, 120 % of the SMCL of 0.050 mg/L.

In three tests ammonia ranged from 0.150 mg/L to 0.170 mg/L, averaging 0.160 mg/L.

Chlorine dosage varied little, averaging 3.15 mg/L. Treated water chlorine concentration averaged 1.31 mg/L. The average chlorine demand was 1.84 mg/L.

Manganese removal was excellent. Finish water manganese concentrations were essentially below the detection limit, averaging just one percent of the SMCL of 0.050 mg/L.

In two of the three tests of the finish water, ammonia concentrations were below the detection limit. In a third test ammonia was reduced about 80 percent from 0.160 mg/L to 0.030 mg/L. In other ATEC systems, we have found that the removal of ammonia takes time for completion and that its concentration diminishes or disappears with time in storage or the distribution system.

In two samples, there was a loss of silica across the media. Over time a loss of silica across the media can decrease the treatment efficacy. In a proprietary process, ATEC has found that a small dose of permanganate can prevent this.

We recommend that silica be tested once a month to determine if there has been any loss across the media and if so, a permanganate feed system should be provided. The design engineer may wish to provide space for this system in his design.

We understand that the well will pump either into the system at about 80 psi or into an onsite reservoir at a much lower pressure. Because the treatment system typically takes 20-30 psi to regulate the backwash, the design engineer should include a means that pressure in the design if filtering to the reservoir.

Recommended System

At the treatment objective of 750 gpm capacity, the recommended system of (6) 48-inch diameter filters would have a loading rate of 10.2 gpm/sf during production and 12.2 gpm/sf during the 3 minutes of backwash when one filter was out of service.

Summary

Based on ATEC's experience with previous systems with similar water, we recommend that backwash should be set initially at 24 hours. The system should be observed for 6 to 8 weeks to determine whether this interval should be adjusted.

Preliminary drawings for this system are included in this report.

Summary of the Recommended Filter System

Parameter	Value
Production Rate	750 gpm
Loading Rate	10.2 gpm/sf
Backwash Rate	14 gpm/sf
Backwash Flow	175 gpm
Backwash Duration	5-minutes per filter
Backwash Frequency	24 hours of production
Backwash Amount	5,250 gallons
Production Between Backwash Cycles	1,080,000 gallons
Backwash as a Percentage of Production	0.50 %

Please contact me if you have any questions or need further information.

Yours truly,

Cullen Wilder

Cullen J. Wilder, P.E. (CA, WA)
Vice President
ATEC Systems Associates, Inc.
916-742-5542 (direct)

Table 1
Summary of Pilot Study Test Conditions
East Palo Alto Park Mutual Water System, Well 7
May 5, 2021

Date	Sample Number	Time	Meter Reading (Gallons)	Average Flow (gpm)	Loading Rate (gpm/ft^2)	Loading Rate (gpm/ft^3)	Media Contact Time (Minutes)	Cl_2 Dose (mg/L)	$KMnO_4$ (mg/L) as Mn	Temp °C
5/5	Start	8:30	-	7.60	9.68	2.76	2.71	3.10	ND	25.0
	1	9:00	237.1	7.90	10.06	2.88	2.60	2.98	ND	25.0
	2	9:30	481.4	8.14	10.37	2.96	2.52	2.89	ND	25.0
	3	10:00	709.4	7.60	9.68	2.76	2.71	3.10	ND	25.0
	4	10:30	934.2	7.49	9.54	2.73	2.74	3.14	ND	25.0
	5	11:00	1,162.8	7.62	9.70	2.77	2.70	3.09	ND	25.0
	6	11:30	1,366.1	6.78	8.63	2.47	3.03	3.48	ND	25.0
	7	12:00	1,591.8	7.52	9.58	2.74	2.73	3.13	ND	25.0
	8	12:30	1,777.7	6.20	7.89	2.25	3.32	3.80	0.210	25.0
	9	13:00	2,012.0	7.81	9.94	2.84	2.63	3.02	0.197	25.0
	10	13:30	2,239.5	7.58	9.66	2.76	2.71	3.11	0.204	25.0
	11	14:00	2,476.3	7.89	10.05	2.87	2.60	2.98	0.186	25.0
	Total or Average		**2,476.30**	7.51	9.56	2.73	2.75	3.15	0.199	25.0

NA, indicates Not Applicable for this test
Not Dosed, (ND) indicating the period of the test
Not Tested, (NT) indicating no value entered because there was no sample to test
Media contact time = Empty bed contact time

750 gpm, 80-85 psi (if going to system)
Used 42" Pyrolox Advantage Filter Media
Sodium Hypochlorite titrated @ 4462.2
BW start and end of the test
Well shut off for power tests on and off from 9:50 - 10:15
Started $KMnO_4$ @ 12:30 because of silica tests

Table 2
Summary of Pilot Test Results
East Palo Alto Park Mutual Water System, Well 7
May 5, 2021

	Source Water							Product Water							
Sample Number	pH (Units)	Fe (mg/L)	Mn (mg/L)	H_2S (mg//L)	Ammonia (mg//L)	Silica (mg/L)	PSI	pH (Units)	Cl_2 (F) (mg/L)	Cl_2 (T) (mg/L)	Fe (mg/L)	Mn (mg/L)	H_2S (mg//L)	Ammonia (mg//L)	Silica (mg/L)	PSI
Start	**8.25**	0.07	0.067				18	**8.26**	**1.38**	**1.56**	0.03	0.004				18
1	**8.23**	0.05	0.058			13.60	18	**8.20**	**1.07**	**1.22**	-	0.002			10.50	18
2	**8.21**	0.06	0.060		0.160		18	**8.18**	**0.66**	**0.88**	-	-		0.030		18
3	**NT**	0.06	0.054	-			16	**NT**	**1.09**	**1.34**	-	-	-			16
4	**NT**	0.06	0.055	-		21.90	16	**NT**	**1.21**	**1.51**	-	-	-		15.20	16
5	**8.19**	0.05	0.059				16	**8.16**	**1.07**	**1.47**	-	-				16
6	**8.25**	0.06	0.060				16	**8.19**	**0.33**	**1.54**	-	-				16
7	**8.30**	0.06	0.063		0.150	5.40	16	**8.10**	**1.05**	**1.20**	-	-		-	21.00	14
8	**8.18**	0.06	0.060				16	**8.15**	**1.11**	**1.39**	0.02	-				15
9	**8.20**	0.06	0.070				5	**8.18**	**1.20**	**1.40**	0.01	-				0
10	**8.23**	0.06	0.068		0.170		5	**8.19**	**1.04**	**1.12**	-	-		-		0
11	**8.21**	0.06	0.051				16	**8.15**	**0.98**	**1.03**	-	-				14
Total or Average	**8.23**	**0.06**	**0.060**	**-**	**0.160**	**13.63**	**15**	**8.18**	**1.02**	**1.31**	**0.01**	**0.001**	**-**	**0.010**	**15.57**	13
Average as Percent of MCL		***19.7%***	***519.3%***								***1.67%***	***1.00%***				
Average Removal Rate											***91.5%***	***99.81%***				

Non Detect, indicating the absence of a metal or chemical at or above the method detection limit is shown as "-" and calculated in the total or average as zero.

Raw manganese values include raw manganese and $KMnO_4$ dose (as Mn)

Figure 1
Pilot Test Results
Chlorine Dosage and Free Residual Concentrations
East Palo Alto Park Mutual Water System, Wells 7
May 5, 2021

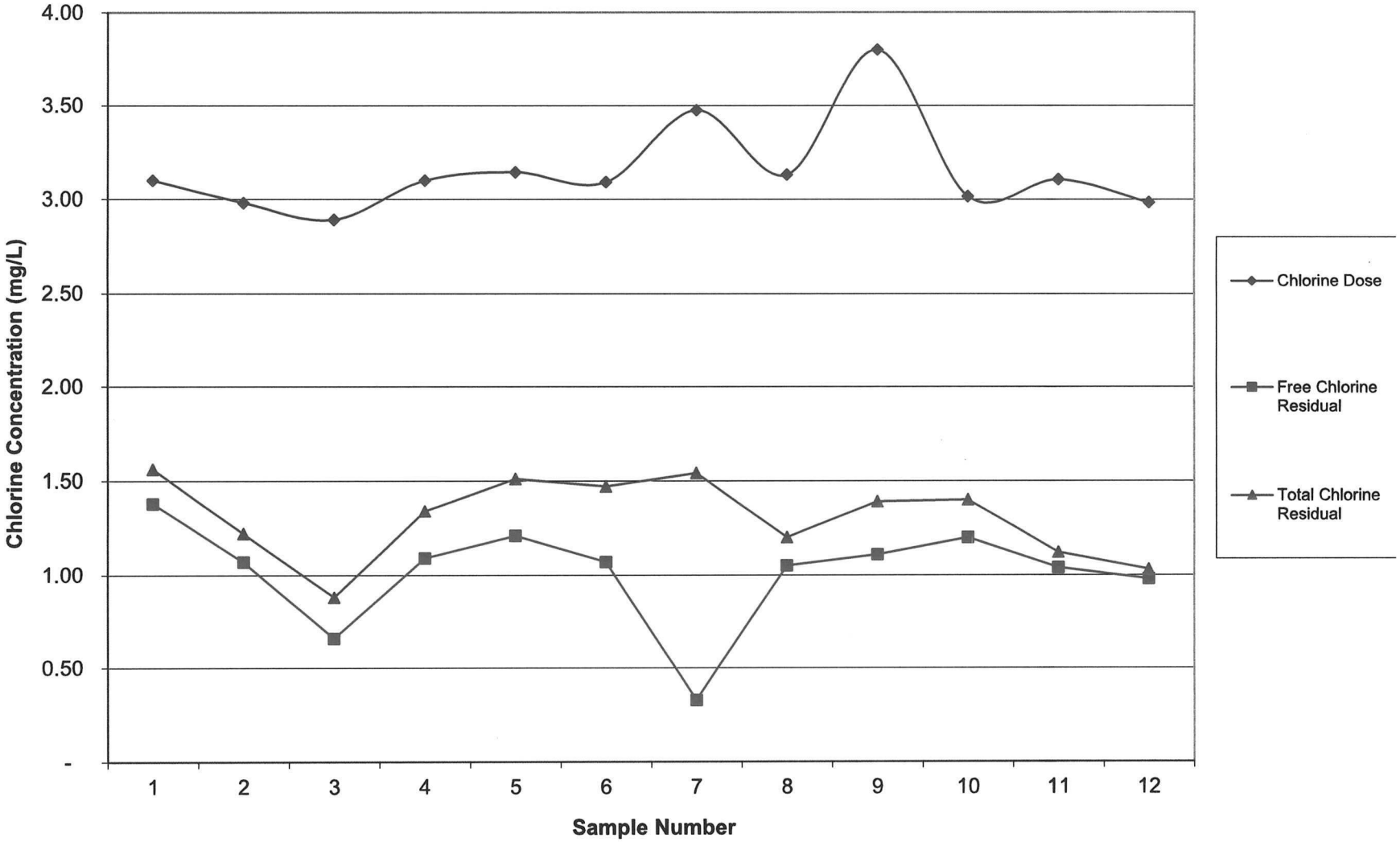

Figure 2
Pilot Test Results
Manganese Removal Using Pyrolox Advantage Filter Media
East Palo Alto Park Mutual Water System, Well 7
May 5, 2021

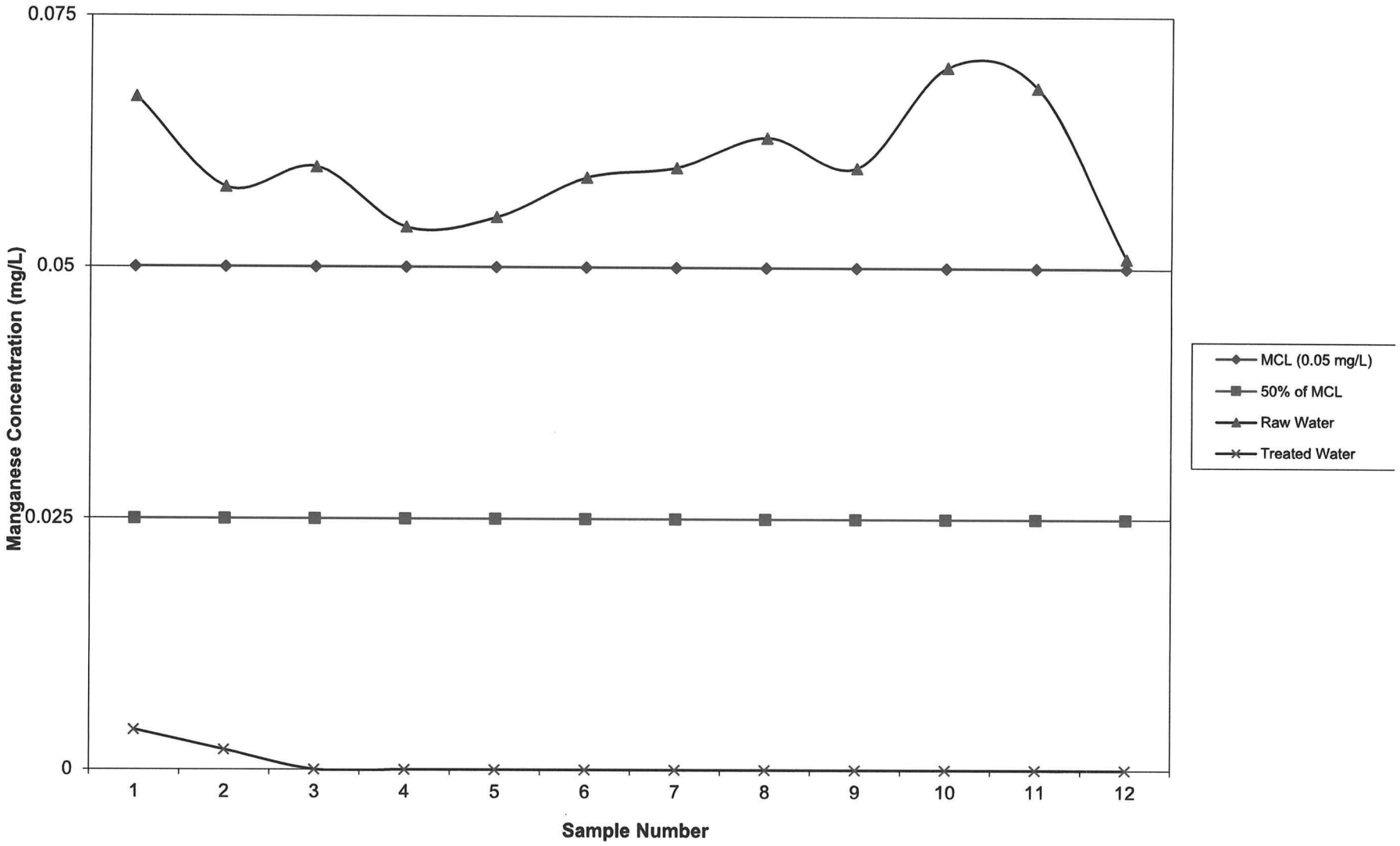

Figure 3
Pilot Test Results
Iron Removal Using ATEC Pyrolox Advantage Filter Media
East Palo Alto Park Mutual Water System, Well 7
May 5, 2021

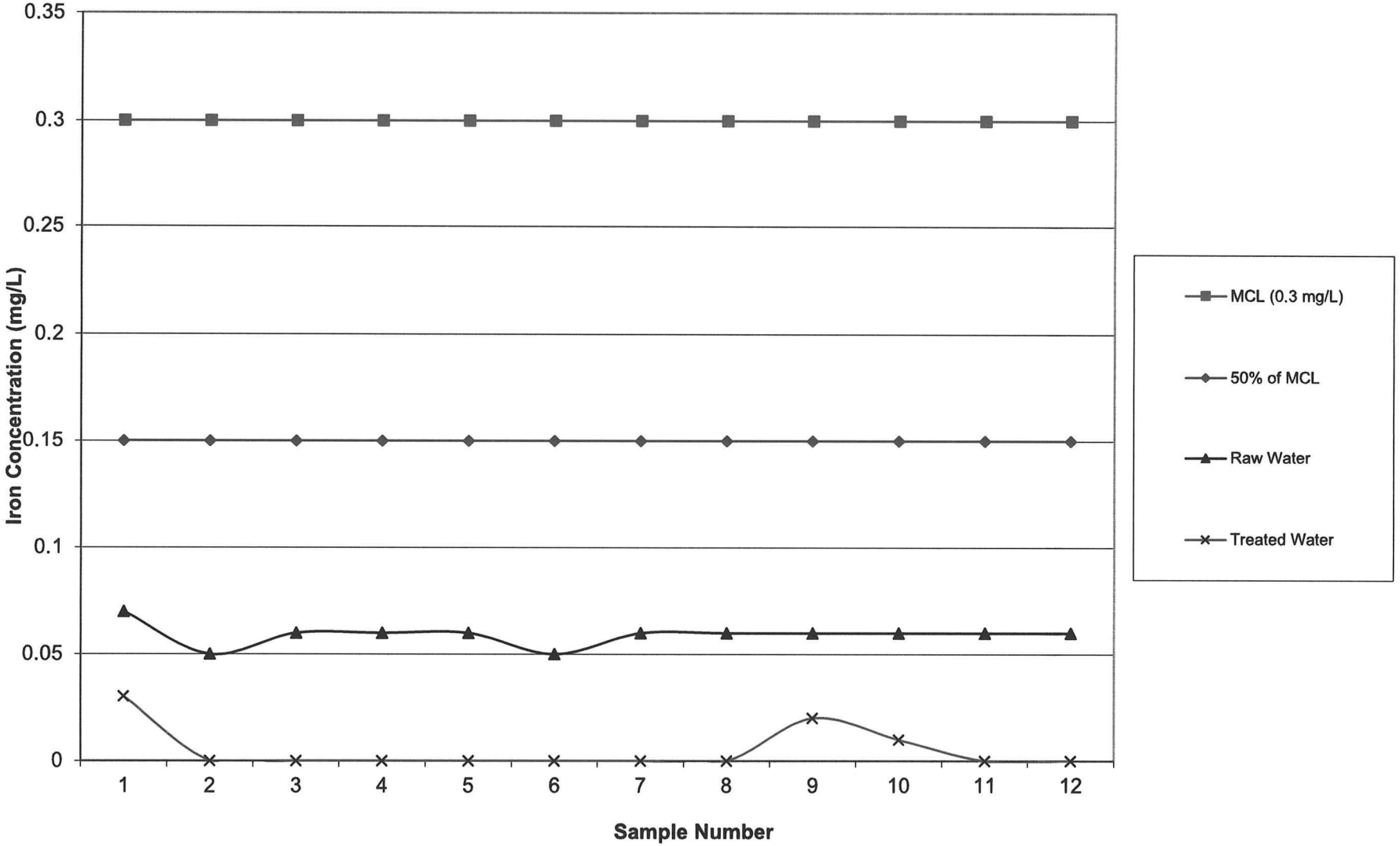

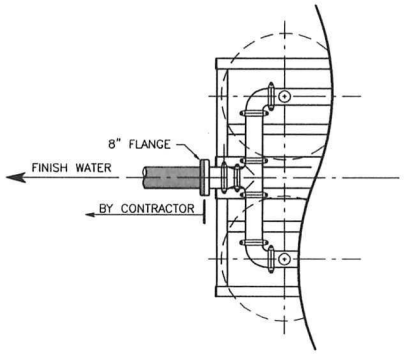

LEFT SIDE, FILTERS REMOVED

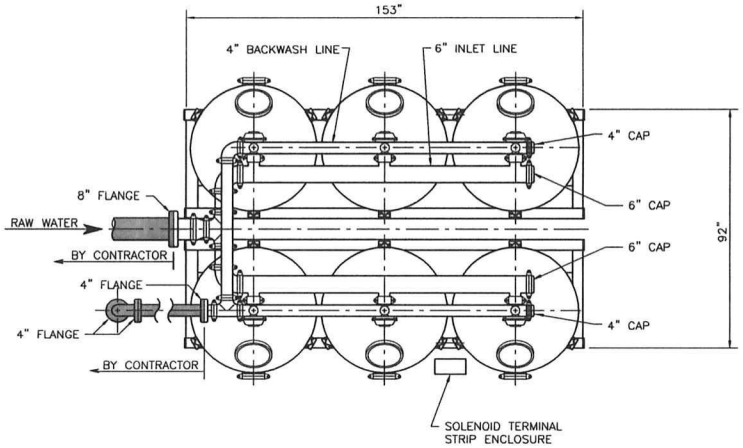

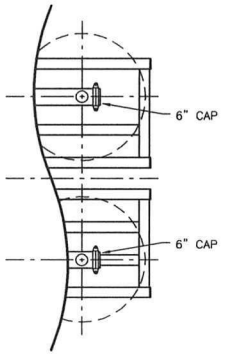

RIGHT SIDE, FILTERS REMOVED

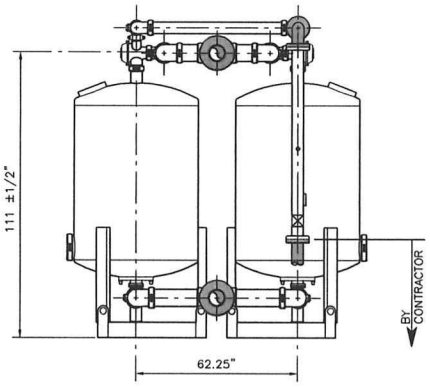

LEFT ELEVATION

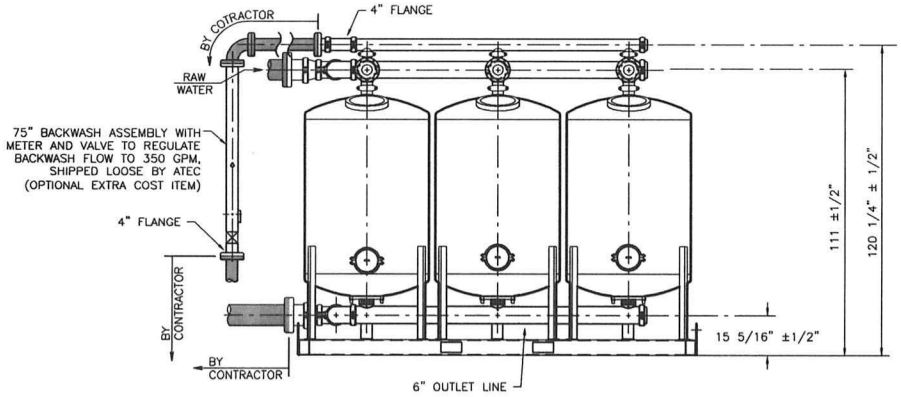

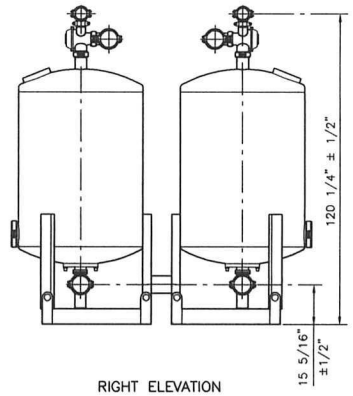

RIGHT ELEVATION

NOTES:

[A] THE SIX (6) FILTER SYSTEM IS DELIVERED ON (2) FILTER SKID.

[B] AIR RELIEF/VACUUM RELIEF VALVE WILL BE SUPPLIED FOR INSTALL ON 2" COUPLING ON INLET LINE.

[C] SHADED PIPING BY CONTRACTOR.

[D] FILTER PIPING CONNECTIONS WILL BE PROVIDED TO SUIT FIELD CONDITIONS.

ATEC SYSTEMS ASSOCIATES
P.O. BOX 10329
BAINBRIDGE ISLAND, WASHINGTON 98110-0329
PHONE: (360 414-9223

DESIGN BY:	.
DRAWN BY:	.
CHECKED BY:	.
APR'D BY:	.

NO.	DATE		BY	APVD

0 2 4
SCALE IN FEET
NOTE: CHECK SCALE
SCALEABLE IN 22x34 - 1/2" = 1'-0"
SCALEABLE IN 11x17 - 1/4" = 1'-0"

EAST PALO ALTO PARK MUTUALWATER SYSTEM
WELL 7
MANGANESE TREATMENT SYSTEM

FILTER DETAILS

SHEET NO. 1 of 2
DWG. NO.
DATE: 5-12-2021
F.I.E: East Palo Alto Park Mutual

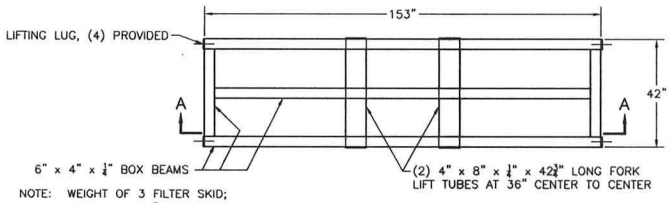

NOTE: WEIGHT OF 3 FILTER SKID;
EMPTY 11,400#
WITH MEDIA AND WATER 36,000#

3 FILTER SKID
(2 REQUIRED)

0 3 4

SCALE IN FEET
NOTE: CHECK SCALE
SCALEABLE IN 22x34 - 1/2" = 1'-0"
SCALEABLE IN 11x17 - 1/4" = 1'-0"

BILL OF MATERIAL			
ITEM	QTY	PART NO.	DESCRIPTION
1	1	PFS-CPL03	4" GROOVED COUPLING, CAST IRON W/ BOLTS & GASKET
2	3	PFS-CPL04	6" GROOVED COUPLING, CAST IRON W/ BOLTS & GASKET
3	1	PFS-CAP08	8" GROOVED END CAP
4	1	PFS-CPL08	8" GROOVED COUPLING, CAST IRON W/ BOLTS & NUTS
5	1	PFS-HHP11	11"x15" HAND HOLE PLATE
6	1	PFS-HHG11	11"x15" HAND HOLE GASKET
7	1	PFS-HHGS11	11"x15" HAND HOLE BOLT SET
8	1	PFS-HHCR11	11"x15" HAND HOLE HOLD DOWN CRAB
9	1	V-BF4	4"x4"x4" SERIES 350 BERMAD BACKWASH VALVE
10	1	UA SS48	UNDER-DRAIN ASSEMBLY 316L SS W/ SCH 80 PVC CAP COMPLETE

NOTE: QUANTITIES FOR ONE (1) TANK

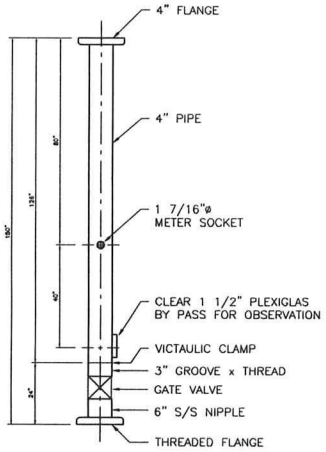

STANDARD BACKWASH ASSEMBLY
(OPTIONAL EXTRA COST ITEM)

SCALE: 1" = 1'-0"

0 1 2

SCALE IN FEET
NOTE: CHECK SCALE
SCALEABLE IN 22x34 - 1" = 1'-0"
SCALEABLE IN 11x17 - 1/2" = 1'-0"

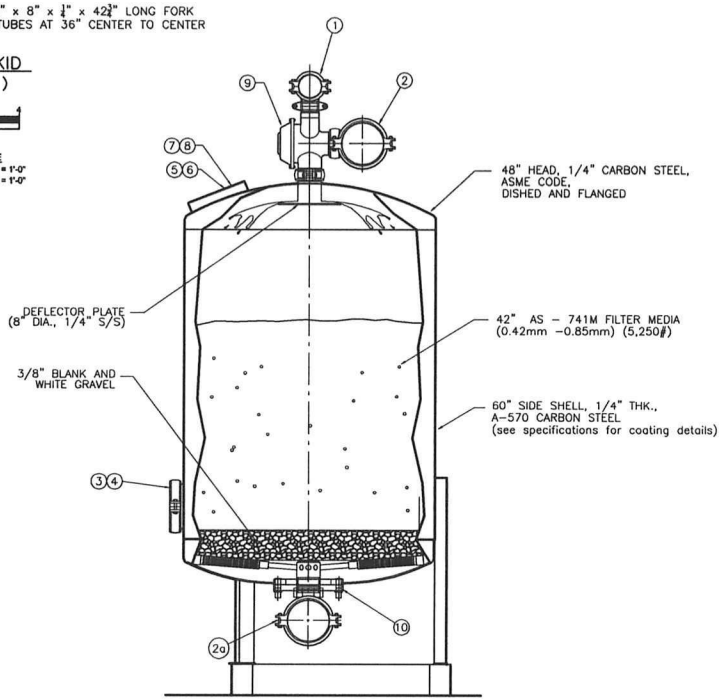

TANK SECTION
SCALE 1" = 1'-0"

0 1 2

SCALE IN FEET
NOTE: CHECK SCALE
SCALEABLE IN 22x34 - 1" = 1'-0"
SCALEABLE IN 11x17 - 1/2" = 1'-0"

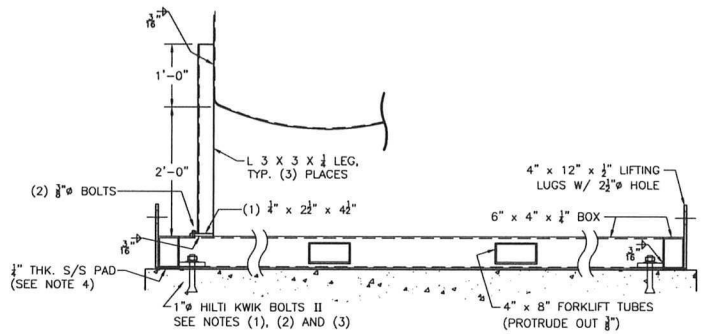

SECTION A–A
SCALE 1" = 1'-0"

0 1 2

SCALE IN FEET
NOTE: CHECK SCALE
SCALEABLE IN 22x34 - 1" = 1'-0"
SCALEABLE IN 11x17 - 1/2" = 1'-0"

FILTER/SYSTEM INFORMATION	
ITEM	
CAPACITY	. GPM
Fe	mg/L
mN	mg/L
COLOR	
BACKWASH	350 GPM
.	
.	
.	

NOTES:

[A] DESIGN OF FOUNDATION AND ANCHORAGE WILL BE BY A CALIFORNIA P.E., PROVIDED WITH THE SUBMITTALS

ATEC SYSTEMS ASSOCIATES
P.O. BOX 10329
BAINBRIDGE ISLAND, WASHINGTON 98110-0329
PHONE: (360) 414-9223

DESIGN BY: .
DRAWN BY: .
CHECKED BY: .
APR'D BY: .

NO.	DATE		BY	APVD

SCALE
AS NOTED

EAST PALO ALTO PARK MUTUALWATER SYSTEM
WELL 7
MANGANESE TREATMENT SYSTEM

FILTER DETAILS

SHEET NO. 2 of 2
DWG. NO.
DATE: 5-12-2021
FILE: East Palo Alto Park Mutual

APPENDIX

ATEC
SYSTEMS ASSOCIATES

Table 1

Physical Characteristics of Pilot Filter Set and Media
ATEC Iron and Manganese Removal System

Pilot Filters[1]			
Sidewall Height (inches)			48 to 60
Overall Height (inches)			62 to 74
Diameter (inches)			6
Filter Surface Area (each) ($ft.^2$)			0.1964
Total Filter Surface Area (ft^2)			0.7854
Underdrain			Stainless Steel Wedgewire, 0.01" slots
Media Support			¾" minus crushed granite, 4"
Source Water Connections			¾" Standard Hose
Recommended Pressure	Minimum/Maximum	Working	20/90 psi
Filter Media[2]			
Depth in Filters (inches)			36 to 48
Volume in Filters (ft^3)			2.36 to 3.15
Approximate Weight in Filters (lbs.)			285
Weight (lbs./ft^3)			120.5
Physical Size (mm)			0.32 –to-0.85
Maximum Removal Capacity			
Iron Removal (mg/L)			10
Manganese Removal (mg/L)			10
Hydrogen Sulfide Removal (mg/L)			5
Non-Adsorptive Removal (microns)			>20

Chemical Dosing Equipment[3]

Stenner Peristaltic Solution Metering Pumps (up to 17.0 gpd @ 100 psi)
LMI Solution Metering Pumps (various capacities)

Other Equipment

Chlorine Analyzer, Hach CL 17 or ProMinent D2C
Flow Meters, Sea Metrics, Inc., FT-420
Data Logger, Endress + Hauser, Mini-Logger
Automatic Samplers, ISCO, Inc.

1/ The pilot filter plant consists of four, 6" filter columns connected by common manifolds for influent, effluent and backwash water. Each filter is controlled by a three-way ball valve. The system is set up to closely mimic a full-scale filter system in terms of media depth, application rates in terms of both area (gpm/ft^2 of filter area) and volume (gpm/ft^3 of media), and backwash characteristics to the extent possible. Source water is metered using a totalizing flow meter. Pressure is measured on the influent and effluent manifold to determine headloss. Chemical injection points are located as close to the filter as possible to simulate actual operation. In cases where extended contact time is desired before the source water enters the filters, a pipe section of pre-determined volume is placed between the chemical injection points and the filters to provide accurate contact time measurement. Sidewall height is variable to a maximum of 60" without modification, allowing a maximum media bed depth of 48".

2/ AS-721M and AS-741M Filter Media, 0.85 to 2.36mm and 0.42mm to 0.85mm, respectively, are both granular manganese dioxide media, derived from naturally occurring pyrolusite, and are certified to ANSI/NSF Standard 61.

3/ Solution metering pumps are available for the injection of up to three chemicals, if needed. Normally, the only chemical injected is chlorine. And in the case of arsenic, ferric chloride. There are, however, provisions for special circumstances, such as pH adjustment for corrosion control or the treatment of water at fish hatcheries that do not permit chlorine.

Table 2 Analytical Equipment

The following analytical equipment is normally carried on our pilot trailers.

Spectrophotometer, Model DR/2800, Hach Co., Loveland, CO
Digital Titrator, Hach Co., Loveland, CO
pH Meter, Model 266, Orion Co., Boston, MA
Stir Plate, Hach Co., Loveland, CO
0.45-Micron Filter, Nalgene

Glassware—beakers, flasks, columns, sample cells, 10 and 25 ml

Although not normally carried in each trailer, a turbidity meter is available.

Reagents for the following field tests:

Spectrophotometer

Free Chlorine, DPD, Method 8021 and 10059 (300 tests)
Total Chlorine, DPD, Method 8167 or 10060 (300 tests)

Iron, FerroZine Method, Method 8147 (500 tests)
Iron, Total, FerroVer Method, Method 8008 (300 tests)

Manganese, Low Range, PAN Method, Method 8149 (500 tests)

Nitrogen, Ammonia, Salicylate Method, Method 8155 (100 tests)

Sulfide, Methylene Blue Method, Method 8131 (100 tests)

Silica, Molybdate Method, Method 8282 (100 tests)

Digital Titrator

Alkalinity, Phenolphthalein and Total Method, Method 8203 (100 tests)
Hardness, Phenolphthalein and Total Method, Method 8203 (100 tests)
Total Chlorine, Iodometric Method, Method 8209 (100 tests)

Field tests not listed above may be available. Please note that we send all tests for arsenic and other contaminants that require digestion or distillation to a commercial laboratory.

Figure 1

ATEC Iron and Manganese Removal Pilot Plant

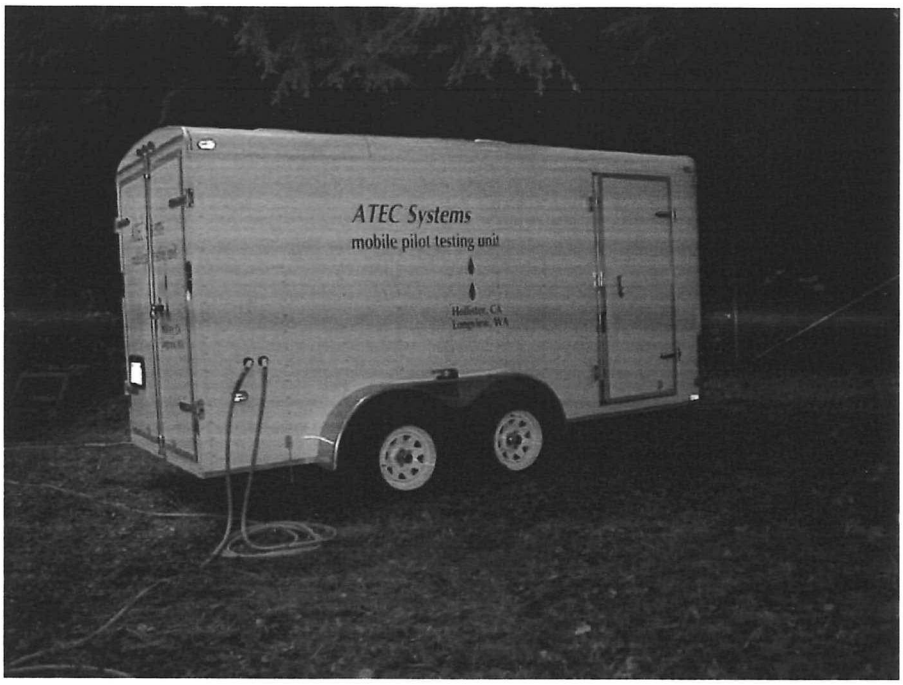

The exterior of ATEC Systems' pilot trailer is shown above. The source and product water connections are shown entering and exiting the trailer. Inside dimensions are 14' x 6' x6½'.

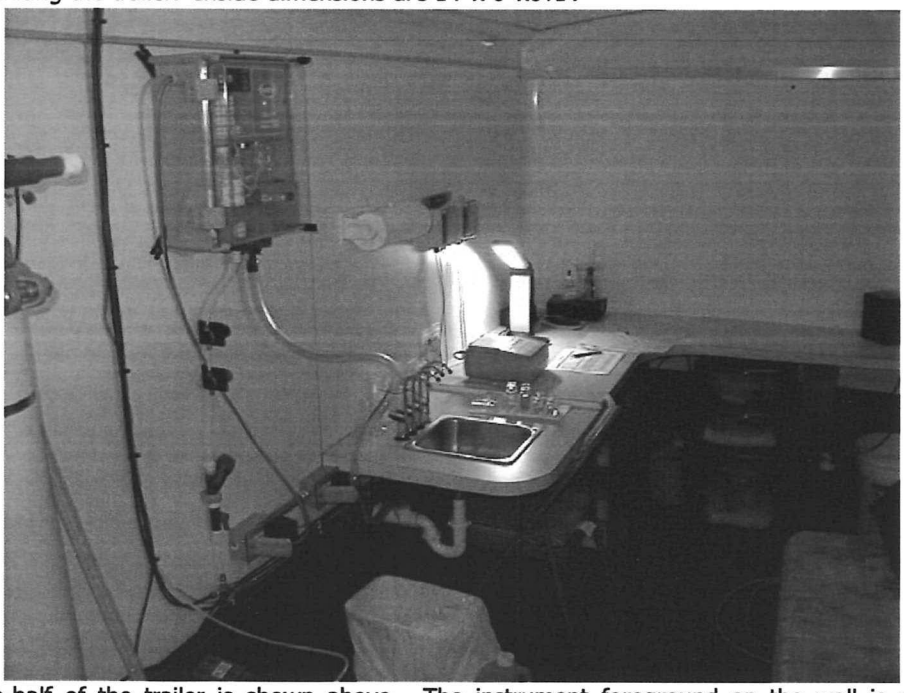

The front one-half of the trailer is shown above. The instrument foreground on the wall is an in-line chlorine analyzer. The smaller boxes on the wall above the light are electronic flow meters used to monitor cumulative as well as instantaneous flow for each treatment train in the pilot plant.



Picture above shows the interior of the pilot plant trailer from the rear. The sample outlets and the analytical equipment are on the desk in the front of the trailer.

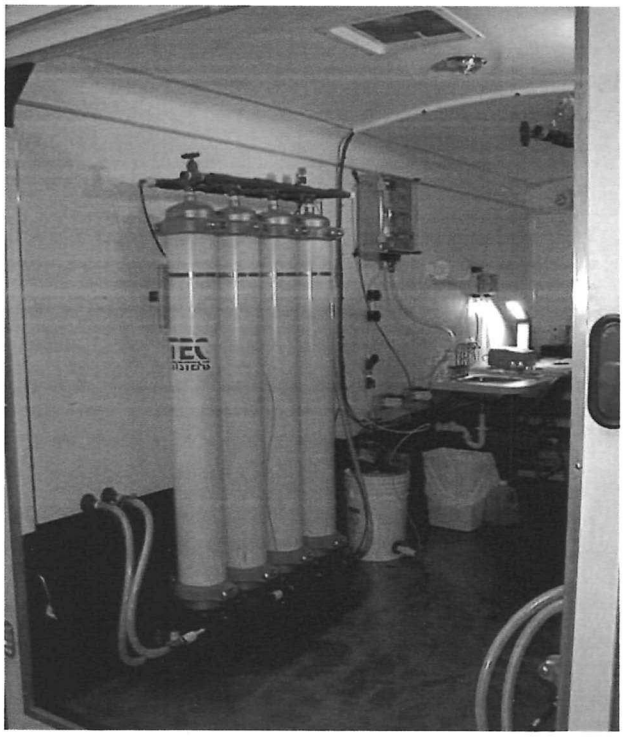

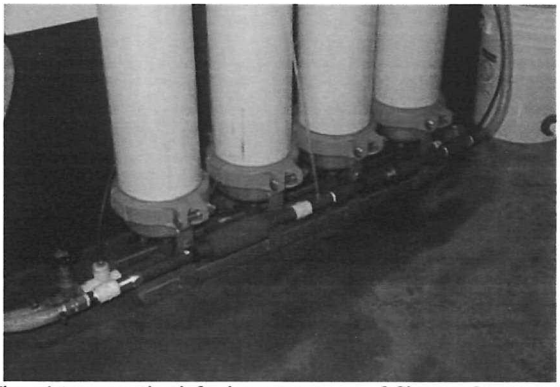

The picture on the left shows one set of filters. Source water enters through the hose inlet in the wall, passes through a flow meter, past a chlorine injection point, through an in-line static mixer, into the inlet manifold, down through the filter media. Product water is discharged through the wall. The pail holding the sodium hypochlorite solution can be seen to the right of the filter vessels and the in-line chlorine analyzer is on the wall above the NaOCl container. The sample ports and analytical equipment is forward of the chlorine analyzer. A second container of Ferric Chloride solution and feed pump is provided for pilot testing for arsenic removal.

Table 3
SUMMARY OF SITE AND INITIAL DATA REQUIREMENTS

1. Power, 115 VAC for injection equipment and lighting
2. Source water, minimum 10 gpm @ 30 psig (ATEC will supply pump if necessary).
3. Disposal of water and backwash effluent[1]

Data Needed from Utility

1. Comprehensive Water System Plan (relevant sections)
2. Inorganic test results (most recent)

[1] Any necessary permits are the responsibility of the client

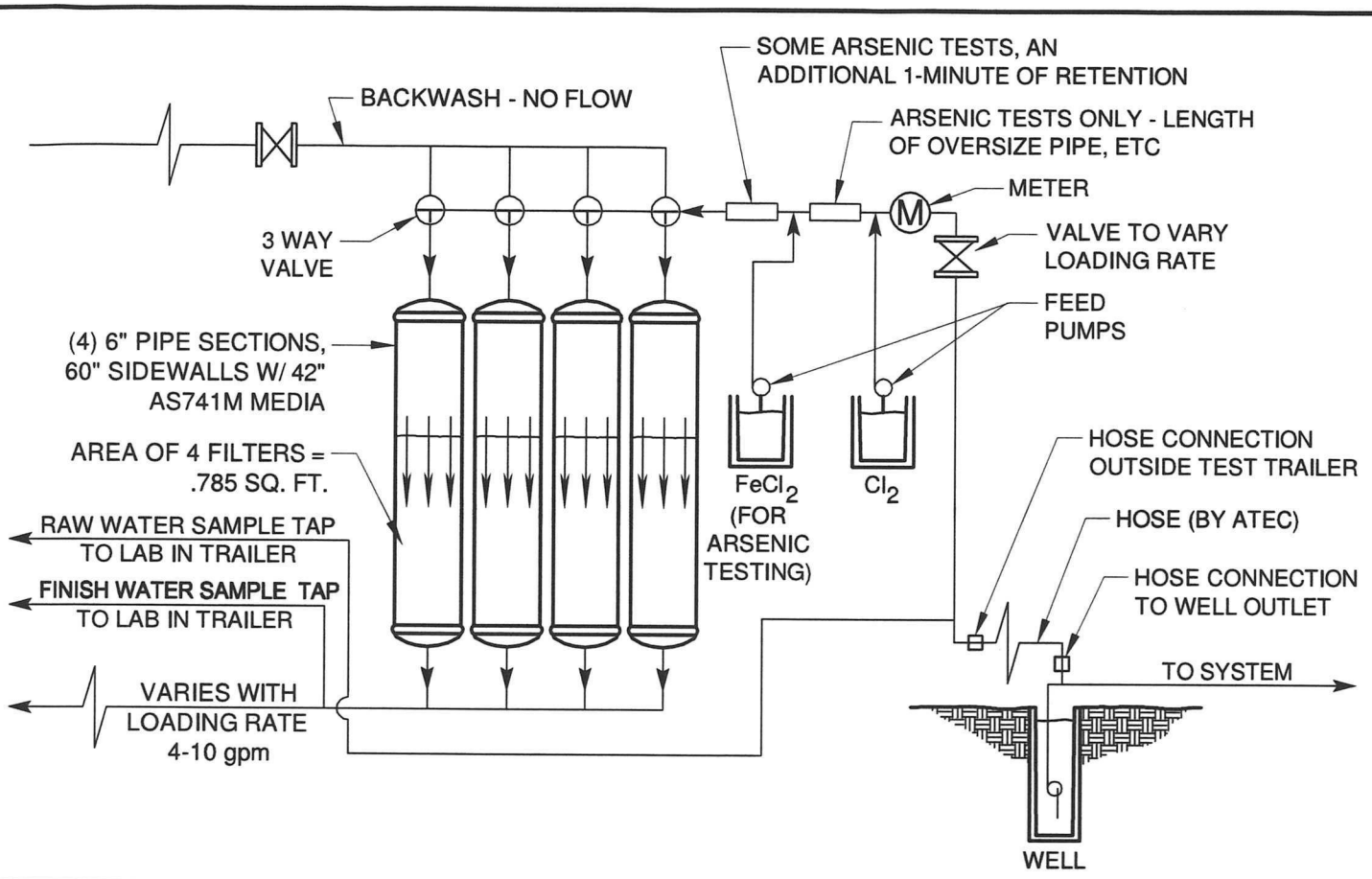

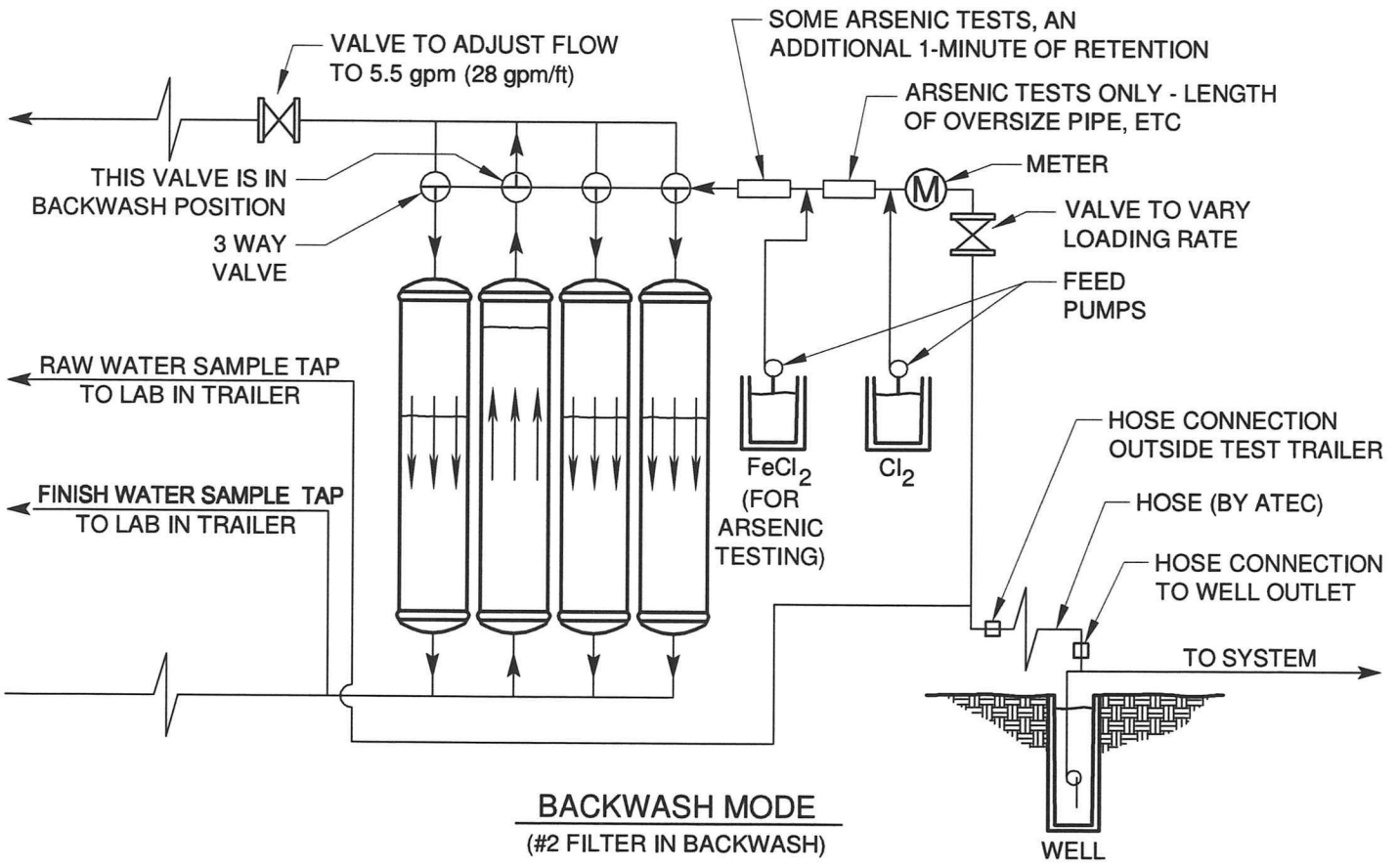

BACKWASH MODE
(#2 FILTER IN BACKWASH)

ATEC SYSTEMS ASSOCIATES
P.O. BOX 10239
BAINBRIDGE ISLAND, WASHINGTON 98110-0329
PHONE: (360) 414-9223 FAX: (360) 397-0375

EXHIBIT 1 PILOT TESTING EQUIPMENT SCHEMATIC

SHEET NO.	1 of 1
DWG. NO.	
DATE:	8-1-12
FILE:	Pilot Test Equip Schematic

Appendix B PAPMWC MODEL RESULTS

Palo Alto Parks Mututal Water Company

Existing System

MDD	412	gpm
FF	1200	gpm for 2 hrs
Node Max Elev	34	ft
Node Min Elev	17	ft

Pipe Material	HW C-Factor	Length (ft)
CI	80	15,565
DI	120	1,068
HDPE	150	3,689
PVC	150	10,766
Sum	-	**31,088**

Node Pressure (psi)	# of Demand Nodes				
	Existing MDD	Future MDD1 (Holland St Intertie Active)	Future MDD2 (Green St Intertie Active)	Future MDD3 (Both interties without Boosters)	Future MDD4 (Both interties with Boosters)
<= 50	0	0	0	20	0
50 - 70	136	21	14	116	0
70 - 80	0	115	122	0	136
> 80	0	0	0	0	0
Sum	**136**	**136**	**136**	**136**	**136**
Min Pressure (psi)	**63**	**69**	**70**	**49**	**71**
Max Pressure (psi)	**70**	**77**	**76**	**56**	**78**

Hydrant Available Fire Flow (gpm)	# of Hydrants				
	Existing MDD	Future FF1 (Holland St Intertie Active)	Future FF2 (Green St Intertie Active)	Future FF3 (Both interties without Boosters)	Future MDD4 (Both interties with Boosters)
<= 1000	0	0	0	1	0
1000 - 1200	2	3	2	2	0
1200 - 1500	17	28	47	9	1
> 1500	54	42	24	61	72
Sum	**73**	**73**	**73**	**73**	**73**
Min Available FF (gpm)	1,076	1,014	1,009	956	1,230

MDD + FF	1612	gpm

Existing well/booster pump		
Elevation	31	ft
Booster Pump Pressure	65	psi
Reservoir head	**181.15**	**ft**
minor loss at pump discharge	10	

The City of East Palo Alto currently operates their system with a pressure of 60 psi entering the system and a lower pressure of 54 psi when it reaches the ends of the distribution network.

Holland St Intertie				
Elevation	22	ft	**Booster pump**	
City of EPA Distribution Sys Pressure	54	psi	**Q**	1612 gpm
Reservoir head	**146.74**	**ft**	**TDH**	38 ft
minor loss at pump discharge	10			184.74 ft

Green St Intertie				
Elevation	26	ft	**Booster pump**	
City of EPA Distribution Sys Pressure	54	psi	**Q**	1612 gpm
Reservoir head	**150.74**	**ft**	**TDH**	36 ft
minor loss at pump discharge	10			186.74 ft

FF run		
Residual Pressure	20	psi
Velocity constraint	n/a	

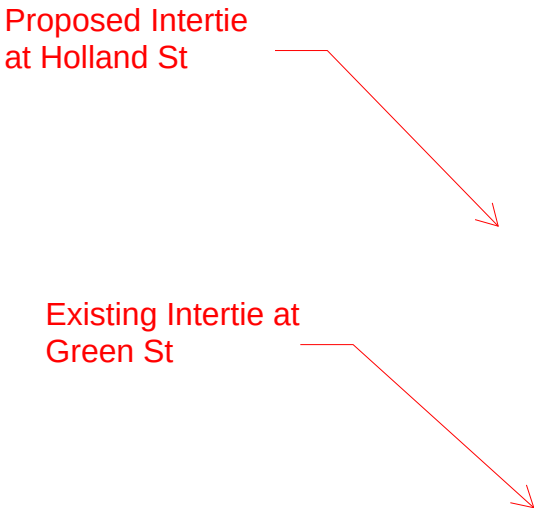
Proposed Intertie
at Holland St
Existing Intertie at
Green St

Material	HW C	Length(ft)
CI	80	15565
DI	120	1068
HDPE	150	3689
PVC	150	10766
Total	Total	31088

Total Pipe Length 31088

ID	Label	Start Node	Stop Node	Diameter (in)	Material	Hazen-Williams C	Minor Loss Coefficient (Local)	Flow (Absolute) (gpm)	Length (ft)	Headloss (ft)	Headloss Gradient (ft/ft)	Velocity (ft/s)
613	P-134(1)	R-5	PMP-1	8	DI	120	0	412	8	0.03	0.004	2.63
614	P-134(2)	PMP-1	J-51	8	DI	120	0	412	58	0.24	0.004	2.63
616	P-135(1)	R-4	PMP-2	8	DI	120	0	0	6	0	0	0
617	P-135(2)	PMP-2	J-80	8	DI	120	0	0	29	0	0	0
168	P-1	J-64	J-79	6	CI	80	0	4.96	147	0	0	0.06
172	P-2	J-79	J-80	6	CI	80	0	31.28	272	0.08	0	0.35
177	P-3	J-64	J-65	6	CI	80	0	4.96	47	0	0	0.06
182	P-4	J-99	J-100	6	PVC	150	0	4.96	145	0	0	0.06
189	P-5	J-81	J-99	6	CI	80	0	20.47	98	0.01	0	0.23
194	P-6	J-99	J-134	6	CI	80	0	15.51	179	0.01	0	0.18
195	P-7	J-134	J-133	6	PVC	150	0	0	53	0	0	0
198	P-8	J-137	J-130	6	PVC	150	0	30.83	285	0.03	0	0.35
202	P-9	J-124	J-131	6	CI	80	0	0	56	0	0	0
206	P-10	J-95	J-102	6	PVC	150	0	9.05	207	0	0	0.1
207	P-11	J-102	J-124	6	CI	80	0	14.01	276	0.02	0	0.16
211	P-12	J-82	J-66	6	PVC	150	0	23.84	108	0.01	0	0.27
213	P-13	J-66	J-67	6	PVC	150	0	23.84	258	0.01	0	0.27
217	P-14	J-67	J-26	6	CI	80	0	8.69	383	0.01	0	0.1
221	P-15	J-67	J-55	6	PVC	150	0	24.06	122	0.01	0	0.27
225	P-16	J-17	J-18	6	CI	80	0	4.96	160	0	0	0.06
235	P-17	J-132	J-83	6	CI	80	0	31.28	246	0.07	0	0.35
236	P-18	J-83	J-47	6	CI	80	0	14.42	252	0.02	0	0.16
238	P-19	J-83	J-114	6	CI	80	0	8.61	578	0.02	0	0.1
240	P-20	J-124	J-125	6	DI	120	0	22.8	237	0.02	0	0.26
245	P-21	J-132	J-126	6	PVC	150	0	28.96	230	0.02	0	0.33
249	P-22	J-118	J-84	6	CI	80	0	65.38	218	0.25	0.001	0.74
259	P-23	J-85	J-68	6	CI	80	0	87.25	224	0.44	0.002	0.99
265	P-24	J-86	J-69	6	CI	80	0	70.19	247	0.33	0.001	0.8
270	P-25	J-48	J-68	6	CI	80	0	146.84	254	1.33	0.005	1.67
277	P-26	J-70	J-33	6	PVC	150	0	15.22	260	0.01	0	0.17
282	P-27	J-10	J-9	6	HDPE	150	0	4.96	109	0	0	0.06
286	P-28	J-27	J-49	6	PVC	150	0	8.18	215	0	0	0.09
289	P-29	J-19	J-10	6	PVC	150	0	11.6	226	0	0	0.13
292	P-30	J-49	J-116	6	PVC	150	0	12	133	0	0	0.14
294	P-31	J-116	J-104	6	PVC	150	0	12	138	0	0	0.14
295	P-32	J-104	J-115	6	PVC	150	0	24.25	225	0.01	0	0.28
297	P-33	J-27	J-34	6	CI	80	0	0.07	226	0	0	0
300	P-34	J-104	J-105	6	PVC	150	0	7.29	144	0	0	0.08
313	P-35	J-35	J-36	6	PVC	150	0	24.1	209	0.01	0	0.27
319	P-36	J-106	J-96	6	PVC	150	0	2.06	265	0	0	0.02
321	P-37	J-96	J-50	6	PVC	150	0	2.58	346	0	0	0.03
322	P-38	J-57	J-106	6	HDPE	150	0	11.47	413	0.01	0	0.13
326	P-39	J-2	J-4	6	HDPE	150	0	110.31	272	0.26	0.001	1.25
327	P-40	J-4	J-6	6	HDPE	150	0	114.53	230	0.24	0.001	1.3
328	P-41	J-6	J-11	6	CI	80	0	85.35	264	0.51	0.002	0.97
329	P-42	J-11	J-20	6	CI	80	0	69.64	215	0.28	0.001	0.79
344	P-47	J-98	J-101	6	PVC	150	0	21.35	77	0	0	0.24

ID	Label	Start Node	Stop Node	Diameter (in)	Material	Hazen-Williams C	Minor Loss Coefficient (Local)	Flow (Absolute) (gpm)	Length (ft)	Headloss (ft)	Headloss Gradient (ft/ft)	Velocity (ft/s)
346	P-48	J-113	J-136	6	PVC	150	0	25.25	258	0.02	0	0.29
347	P-49	J-136	J-137	6	PVC	150	0	25.25	21	0	0	0.29
349	P-50	J-82	J-58	6	PVC	150	0	4.96	175	0	0	0.06
351	P-51	J-102	J-120	6	CI	80	0	0	50	0	0	0
353	P-52	J-80	J-87	6	CI	80	0	44.22	117	0.07	0.001	0.5
354	P-53	J-87	J-81	6	CI	80	0	44.22	50	0.03	0.001	0.5
356	P-54	J-69	J-63	6	CI	80	0	125.07	63	0.25	0.004	1.42
357	P-55	J-63	J-56	6	CI	80	0	125.07	220	0.85	0.004	1.42
359	P-56	J-103	J-90	6	CI	80	0	72.46	236	0.33	0.001	0.82
360	P-57	J-90	J-86	6	CI	80	0	72.46	39	0.06	0.001	0.82
362	P-58	J-125	J-108	6	CI	80	0	62.49	262	0.28	0.001	0.71
363	P-59	J-108	J-103	6	CI	80	0	62.49	27	0.03	0.001	0.71
365	P-60	J-114	J-123	6	CI	80	0	27.44	229	0.05	0	0.31
366	P-61	J-123	J-125	6	CI	80	0	27.44	30	0.01	0	0.31
369	P-62	J-111	J-114	6	CI	80	0	13.87	38	0	0	0.16
371	P-63	J-67	J-75	6	CI	80	0	13.87	30	0	0	0.16
372	P-64	J-75	J-111	6	CI	80	0	13.87	211	0.01	0	0.16
374	P-65	J-55	J-54	6	PVC	150	0	12.89	38	0	0	0.15
377	P-66	J-26	J-25	6	CI	80	0	3.72	30	0	0	0.04
378	P-67	J-25	J-17	6	CI	80	0	3.72	243	0	0	0.04
381	P-68	J-97	J-103	6	CI	80	0	5.01	273	0	0	0.06
383	P-69	J-83	J-78	6	PVC	150	0	20.5	38	0	0	0.23
386	P-70	J-47	J-45	6	PVC	150	0	12.43	37	0	0	0.14
389	P-71	J-126	J-122	6	CI	80	0	28.96	103	0.03	0	0.33
390	P-72	J-122	J-118	6	CI	80	0	28.96	47	0.01	0	0.33
392	P-73	J-84	J-88	6	CI	80	0	79.41	209	0.35	0.002	0.9
393	P-74	J-88	J-85	6	CI	80	0	79.41	35	0.06	0.002	0.9
396	P-75	J-3	J-2	6	HDPE	150	0	115.27	40	0.04	0.001	1.31
398	P-76	J-119	J-117	6	DI	120	0	45.72	42	0.01	0	0.52
399	P-77	J-117	J-115	6	DI	120	0	45.72	278	0.08	0	0.52
401	P-78	J-33	J-22	6	PVC	150	0	22.68	148	0.01	0	0.26
402	P-79	J-22	J-19	6	PVC	150	0	22.68	34	0	0	0.26
404	P-80	J-34	J-44	6	PVC	150	0	10.89	34	0	0	0.12
405	P-81	J-44	J-105	6	PVC	150	0	10.89	347	0	0	0.12
407	P-82	J-105	J-107	6	PVC	150	0	8.56	35	0	0	0.1
408	P-83	J-107	J-106	6	PVC	150	0	8.56	191	0	0	0.1
410	P-84	J-50	J-40	6	CI	80	0	9.03	282	0.01	0	0.1
411	P-85	J-40	J-37	6	CI	80	0	9.03	25	0	0	0.1
413	P-86	J-36	J-46	6	CI	80	0	11.42	379	0.02	0	0.13
414	P-87	J-46	J-50	6	CI	80	0	11.42	28	0	0	0.13
416	P-88	J-20	J-31	6	CI	80	0	40.49	247	0.12	0	0.46
417	P-89	J-31	J-36	6	CI	80	0	40.49	20	0.01	0	0.46
419	P-90	J-101	J-112	6	PVC	150	0	16.38	219	0.01	0	0.19
420	P-91	J-112	J-113	6	PVC	150	0	11.42	221	0	0	0.13
422	P-92	J-79	J-91	6	PVC	150	0	21.35	63	0	0	0.24
423	P-93	J-91	J-98	6	PVC	150	0	21.35	286	0.01	0	0.24
425	P-94	J-113	J-109	6	PVC	150	0	18.79	101	0	0	0.21
426	P-95	J-109	J-81	6	PVC	150	0	18.79	331	0.01	0	0.21
428	P-96	J-137	J-135	6	PVC	150	0	10.54	260	0	0	0.12
429	P-97	J-135	J-134	6	PVC	150	0	10.54	158	0	0	0.12
431	P-98	J-130	J-127	6	PVC	150	0	3.82	298	0	0	0.04
432	P-99	J-127	J-124	6	PVC	150	0	3.82	33	0	0	0.04
434	P-100	J-130	J-128	6	PVC	150	0	29.69	21	0	0	0.34
435	P-101	J-128	J-95	6	PVC	150	0	29.69	214	0.02	0	0.34
437	P-102	J-95	J-93	6	PVC	150	0	33.77	39	0	0	0.38

ID	Label	Start Node	Stop Node	Diameter (in)	Material	Hazen-Williams C	Minor Loss Coefficient (Local)	Flow (Absolute) (gpm)	Length (ft)	Headloss (ft)	Headloss Gradient (ft/ft)	Velocity (ft/s)
438	P-103	J-93	J-82	6	PVC	150	0	33.77	139	0.01	0	0.38
440	P-104	J-80	J-76	6	CI	80	0	80.46	203	0.35	0.002	0.91
441	P-105	J-76	J-69	6	CI	80	0	80.46	318	0.55	0.002	0.91
443	P-106	J-17	J-23	6	CI	80	0	6.2	38	0	0	0.07
444	P-107	J-23	J-55	6	CI	80	0	6.2	314	0	0	0.07
446	P-108	J-56	J-53	6	HDPE	150	0	130.03	30	0.04	0.001	1.48
449	P-109	J-53	J-51	6	HDPE	150	0	130.03	308	0.4	0.001	1.48
450	P-110	J-51	J-48	6	HDPE	150	0	281.97	14	0.08	0.005	3.2
452	P-111	J-69	J-71	6	CI	80	0	30.55	360	0.1	0	0.35
453	P-112	J-71	J-68	6	CI	80	0	30.55	113	0.03	0	0.35
455	P-113	J-85	J-89	6	CI	80	0	12.2	231	0.01	0	0.14
456	P-114	J-89	J-86	6	CI	80	0	7.24	346	0.01	0	0.08
458	P-115	J-84	J-92	6	CI	80	0	4.92	164	0	0	0.06
459	P-116	J-92	J-97	6	CI	80	0	0.05	261	0	0	0
461	P-117	J-125	J-129	6	PVC	150	0	7.28	372	0	0	0.08
462	P-118	J-129	J-132	6	PVC	150	0	7.28	96	0	0	0.08
464	P-119	J-54	J-52	6	PVC	150	0	12.89	346	0.01	0	0.15
465	P-120	J-52	J-47	6	PVC	150	0	7.93	196	0	0	0.09
467	P-121	J-5	J-14	6	CI	80	0	4.96	182	0	0	0.06
468	P-122	J-14	J-47	6	CI	80	0	4.96	346	0	0	0.06
470	P-123	J-78	J-73	6	PVC	150	0	20.5	315	0.01	0	0.23
471	P-124	J-73	J-70	6	PVC	150	0	20.5	102	0	0	0.23
473	P-125	J-45	J-41	6	PVC	150	0	12.43	303	0.01	0	0.14
474	P-126	J-41	J-33	6	PVC	150	0	12.43	121	0	0	0.14
476	P-127	J-10	J-16	6	CI	80	0	1.68	213	0	0	0.02
477	P-128	J-16	J-27	6	CI	80	0	3.29	214	0	0	0.04
479	P-129	J-49	J-29	6	PVC	150	0	1.15	198	0	0	0.01
480	P-130	J-29	J-19	6	PVC	150	0	6.11	208	0	0	0.07
482	P-131	J-70	J-94	6	PVC	150	0	0.31	235	0	0	0
483	P-132	J-94	J-115	6	PVC	150	0	4.65	245	0	0	0.05
485	P-133	J-118	J-121	6	DI	120	0	31.46	103	0.01	0	0.36
486	P-134	J-121	J-119	6	DI	120	0	31.46	307	0.04	0	0.36
488	P-135	J-84	J-77	6	CI	80	0	4.15	39	0	0	0.05
491	P-136	J-77	J-62	6	CI	80	0	4.15	247	0	0	0.05
494	P-137	J-85	J-60	6	CI	80	0	9.32	271	0.01	0	0.11
497	P-138	J-68	J-59	6	CI	80	0	24.08	138	0.03	0	0.27
500	P-139	J-59	J-30	6	CI	80	0	19.11	356	0.04	0	0.22
503	P-140	J-30	J-15	6	CI	80	0	14.15	321	0.02	0	0.16
506	P-141	J-15	J-7	6	CI	80	0	9.19	229	0.01	0	0.1
507	P-142	J-7	J-4	6	CI	80	0	9.19	41	0	0	0.1
510	P-143	J-8	J-3	6	HDPE	150	0	115.27	218	0.23	0.001	1.31
513	P-144	J-21	J-8	6	HDPE	150	0	120.23	246	0.28	0.001	1.36
515	P-145	J-48	J-32	6	HDPE	150	0	130.16	181	0.24	0.001	1.48
516	P-146	J-32	J-21	6	HDPE	150	0	125.2	315	0.38	0.001	1.42
518	P-147	J-60	J-28	6	CI	80	0	14.29	386	0.03	0	0.16
521	P-148	J-28	J-13	6	CI	80	0	19.25	305	0.04	0	0.22
522	P-149	J-13	J-6	6	CI	80	0	24.21	205	0.04	0	0.27
524	P-150	J-62	J-42	6	CI	80	0	0.82	361	0	0	0.01
527	P-151	J-42	J-24	6	CI	80	0	5.78	336	0	0	0.07
530	P-152	J-24	J-12	6	CI	80	0	10.75	230	0.01	0	0.12
531	P-153	J-12	J-11	6	CI	80	0	10.75	30	0	0	0.12
533	P-154	J-119	J-74	6	HDPE	150	0	19.22	414	0.02	0	0.22
534	P-155	J-74	J-20	6	HDPE	150	0	24.19	487	0.03	0	0.27
536	P-156	J-115	J-110	6	PVC	150	0	11.85	53	0	0	0.13
539	P-157	J-57	J-43	6	PVC	150	0	4.58	200	0	0	0.05

ID	Label	Start Node	Stop Node	Diameter (in)	Material	Hazen-Williams C	Minor Loss Coefficient (Local)	Flow (Absolute) (gpm)	Length (ft)	Headloss (ft)	Headloss Gradient (ft/ft)	Velocity (ft/s)
540	P-158	J-43	J-35	6	PVC	150	0	4.58	48	0	0	0.05
542	P-159	J-35	J-61	6	HDPE	150	0	14.56	180	0	0	0.17
543	P-160	J-61	J-96	6	HDPE	150	0	9.6	232	0	0	0.11
545	P-161	J-110	J-72	6	PVC	150	0	11.85	263	0	0	0.13
546	P-162	J-72	J-57	6	PVC	150	0	11.85	80	0	0	0.13
548	P-163	J-34	J-38	6	CI	80	0	5.86	293	0	0	0.07
551	P-164	J-38	J-39	6	CI	80	0	0.89	360	0	0	0.01
552	P-165	J-39	J-37	6	CI	80	0	4.07	249	0	0	0.05

MDD	411.68
max elev	34
min elev	17

ID	Label	Is Active?	Elevation (ft)	Demand (gpm)	Pressure (psi)	Hydraulic Grade (ft)	Pressure (Minimum) (psi)	Pressure (Maximum) (psi)
166	J-64	TRUE	25	0	68	183.3	68	68
167	J-79	TRUE	26	4.96	68	183.3	68	68
169	J-133	TRUE	33	0	65	183.26	65	65
171	J-80	TRUE	26	4.96	68	183.38	68	68
174	J-4	TRUE	18	4.96	72	184.31	72	72
176	J-65	TRUE	25	4.96	68	183.3	68	68
178	J-99	TRUE	28	0	67	183.28	67	67
181	J-100	TRUE	28	4.96	67	183.28	67	67
183	J-101	TRUE	28	4.96	67	183.28	67	67
185	J-113	TRUE	29	4.96	67	183.27	67	67
187	J-81	TRUE	26	4.96	68	183.29	68	68
191	J-137	TRUE	34	4.96	65	183.26	65	65
193	J-134	TRUE	33	4.96	65	183.26	65	65
197	J-130	TRUE	32	4.96	65	183.23	65	65
199	J-124	TRUE	31	4.96	66	183.23	66	66
201	J-131	TRUE	32	0	65	183.23	65	65
203	J-95	TRUE	27	4.96	68	183.21	68	68
205	J-102	TRUE	28	4.96	67	183.21	67	67
208	J-82	TRUE	26	4.96	68	183.19	68	68
210	J-66	TRUE	25	0	68	183.19	68	68
212	J-67	TRUE	25	4.96	68	183.17	68	68
214	J-33	TRUE	22	4.96	70	183.15	70	70
216	J-26	TRUE	21	4.96	70	183.16	70	70
218	J-17	TRUE	20	4.96	71	183.16	71	71
220	J-55	TRUE	24	4.96	69	183.16	69	69
224	J-18	TRUE	20	4.96	71	183.16	71	71
226	J-132	TRUE	32	4.96	65	183.25	65	65
228	J-47	TRUE	23	4.96	69	183.16	69	69
232	J-5	TRUE	18	4.96	71	183.15	71	71
234	J-83	TRUE	26	4.96	68	183.17	68	68
237	J-114	TRUE	29	4.96	67	183.19	67	67
239	J-125	TRUE	31	4.96	66	183.25	66	66
244	J-126	TRUE	31	0	66	183.27	66	66
246	J-118	TRUE	30	4.96	66	183.3	66	66
248	J-84	TRUE	26	4.96	68	183.56	68	68
250	J-103	TRUE	28	4.96	67	183.56	67	67
252	J-85	TRUE	26	4.96	68	183.97	68	68

ID	Label	Is Active?	Elevation (ft)	Demand (gpm)	Pressure (psi)	Hydraulic Grade (ft)	Pressure (Minimum) (psi)	Pressure (Maximum) (psi)
254	J-86	TRUE	26	4.96	68	183.95	68	68
256	J-68	TRUE	25	4.96	69	184.41	69	69
262	J-69	TRUE	25	4.96	69	184.28	69	69
266	J-56	TRUE	24	4.96	70	185.38	70	70
268	J-48	TRUE	23	4.96	70	185.74	70	70
271	J-119	TRUE	30	4.96	66	183.25	66	66
273	J-70	TRUE	25	4.96	68	183.15	68	68
275	J-115	TRUE	29	4.96	67	183.16	67	67
278	J-9	TRUE	19	4.96	71	183.14	71	71
280	J-10	TRUE	19	4.96	71	183.14	71	71
283	J-27	TRUE	21	4.96	70	183.14	70	70
285	J-49	TRUE	23	4.96	69	183.14	69	69
287	J-19	TRUE	20	4.96	71	183.14	71	71
291	J-116	TRUE	29	0	67	183.14	67	67
293	J-104	TRUE	28	4.96	67	183.14	67	67
296	J-34	TRUE	22	4.96	70	183.14	70	70
298	J-105	TRUE	28	4.96	67	183.14	67	67
302	J-20	TRUE	20	4.96	71	183.29	71	71
304	J-11	TRUE	19	4.96	71	183.57	71	71
306	J-6	TRUE	18	4.96	72	184.08	72	72
308	J-57	TRUE	24	4.96	69	183.15	69	69
310	J-35	TRUE	22	4.96	70	183.15	70	70
312	J-36	TRUE	22	4.96	70	183.16	70	70
314	J-37	TRUE	22	4.96	70	183.13	70	70
316	J-106	TRUE	28	4.96	67	183.14	67	67
318	J-96	TRUE	27	4.96	68	183.14	68	68
320	J-50	TRUE	23	4.96	69	183.14	69	69
324	J-2	TRUE	17	4.96	73	184.57	73	73
342	J-98	TRUE	27.64	0	67	183.29	67	67
345	J-136	TRUE	33.62	0	65	183.26	65	65
348	J-58	TRUE	24	4.96	69	183.19	69	69
350	J-120	TRUE	30	0	66	183.21	66	66
352	J-87	TRUE	26	0	68	183.32	68	68
355	J-63	TRUE	24.78	0	69	184.52	69	69
358	J-90	TRUE	26.28	0	68	183.89	68	68
361	J-108	TRUE	28.28	0	67	183.53	67	67
364	J-123	TRUE	30.77	0	66	183.24	66	66
367	J-111	TRUE	28.45	0	67	183.19	67	67
370	J-75	TRUE	25.42	0	68	183.17	68	68
373	J-54	TRUE	23.93	0	69	183.16	69	69
376	J-25	TRUE	20.89	0	70	183.16	70	70

ID	Label	Is Active?	Elevation (ft)	Demand (gpm)	Pressure (psi)	Hydraulic Grade (ft)	Pressure (Minimum) (psi)	Pressure (Maximum) (psi)
379	J-97	TRUE	27.22	4.96	68	183.56	68	68
382	J-78	TRUE	25.92	0	68	183.17	68	68
385	J-45	TRUE	22.92	0	69	183.16	69	69
388	J-122	TRUE	30.31	0	66	183.29	66	66
391	J-88	TRUE	26	0	68	183.91	68	68
394	J-3	TRUE	18	0	72	184.62	72	72
397	J-117	TRUE	29.87	0	66	183.23	66	66
400	J-22	TRUE	20.38	0	70	183.14	70	70
403	J-44	TRUE	22.54	0	69	183.14	69	69
406	J-107	TRUE	28	0	67	183.14	67	67
409	J-40	TRUE	22.08	0	70	183.13	70	70
412	J-46	TRUE	22.93	0	69	183.14	69	69
415	J-31	TRUE	21.85	0	70	183.17	70	70
418	J-112	TRUE	28.5	4.96	67	183.28	67	67
421	J-91	TRUE	26.3	0	68	183.3	68	68
424	J-109	TRUE	28.3	0	67	183.28	67	67
427	J-135	TRUE	33.38	0	65	183.26	65	65
430	J-127	TRUE	31.1	0	66	183.23	66	66
433	J-128	TRUE	31.55	0	66	183.23	66	66
436	J-93	TRUE	26.78	0	68	183.21	68	68
439	J-76	TRUE	25.61	0	68	183.73	68	68
442	J-23	TRUE	20.43	0	70	183.16	70	70
445	J-53	TRUE	23.92	0	70	185.42	70	70
448	J-51	TRUE	23.04	0	70	185.82	70	70
451	J-71	TRUE	25	0	69	184.38	69	69
454	J-89	TRUE	26	4.96	68	183.95	68	68
457	J-92	TRUE	26.47	4.96	68	183.56	68	68
460	J-129	TRUE	31.79	0	66	183.25	66	66
463	J-52	TRUE	23.34	4.96	69	183.16	69	69
466	J-14	TRUE	19.73	0	71	183.15	71	71
469	J-73	TRUE	25.22	0	68	183.16	68	68
472	J-41	TRUE	22.26	0	70	183.15	70	70
475	J-16	TRUE	20	4.96	71	183.14	71	71
478	J-29	TRUE	21.54	4.96	70	183.14	70	70
481	J-94	TRUE	26.96	4.96	68	183.15	68	68
484	J-121	TRUE	30	0	66	183.29	66	66
487	J-77	TRUE	25.78	0	68	183.56	68	68
490	J-62	TRUE	24.39	4.96	69	183.56	69	69
493	J-60	TRUE	24.14	4.96	69	183.98	69	69
496	J-59	TRUE	24.11	4.96	69	184.39	69	69
499	J-30	TRUE	21.81	4.96	70	184.34	70	70

ID	Label	Is Active?	Elevation (ft)	Demand (gpm)	Pressure (psi)	Hydraulic Grade (ft)	Pressure (Minimum) (psi)	Pressure (Maximum) (psi)
502	J-15	TRUE	19.74	4.96	71	184.32	71	71
505	J-7	TRUE	18.27	0	72	184.31	72	72
508	J-8	TRUE	18.55	4.96	72	184.84	72	72
511	J-21	TRUE	20.02	4.96	71	185.12	71	71
514	J-32	TRUE	21.91	4.96	71	185.5	71	71
517	J-28	TRUE	21.5	4.96	70	184	70	70
520	J-13	TRUE	19.4	4.96	71	184.04	71	71
523	J-42	TRUE	22.36	4.96	70	183.56	70	70
526	J-24	TRUE	20.46	4.96	71	183.56	71	71
529	J-12	TRUE	19.17	0	71	183.57	71	71
532	J-74	TRUE	25.41	4.96	68	183.26	68	68
535	J-110	TRUE	28.33	0	67	183.15	67	67
538	J-43	TRUE	22.39	0	70	183.15	70	70
541	J-61	TRUE	24.19	4.96	69	183.15	69	69
544	J-72	TRUE	25.01	0	68	183.15	68	68
547	J-38	TRUE	22	4.96	70	183.13	70	70
550	J-39	TRUE	22	4.96	70	183.13	70	70

Existing MDD

total demand	411.68
Pressure	
<= 50	0
50 - 70	136
70 - 80	0
> 80	0
	136
	136

0	50
50	70
70	80
80	200

Highest minimum Pressure 70

Lowest Minimum Pressure 63

ID	Label	Is Active?	Elevation (ft)	Demand (gpm)	Pressure (psi)	Hydraulic Grade (ft)	Pressure (Minimum) (psi)	Pressure (Maximum) (psi)
166	J-64	TRUE	25	0	67	179.22	67	67
167	J-79	TRUE	26	4.96	66	179.23	66	66
169	J-133	TRUE	33	0	63	179.24	63	63
171	J-80	TRUE	26	4.96	66	179.23	66	66
174	J-4	TRUE	18	4.96	70	179.22	70	70
176	J-65	TRUE	25	4.96	67	179.22	67	67
178	J-99	TRUE	28	0	65	179.23	65	65
181	J-100	TRUE	28	4.96	65	179.23	65	65
183	J-101	TRUE	28	4.96	65	179.23	65	65
185	J-113	TRUE	29	4.96	65	179.23	65	65
187	J-81	TRUE	26	4.96	66	179.23	66	66
191	J-137	TRUE	34	4.96	63	179.25	63	63
193	J-134	TRUE	33	4.96	63	179.24	63	63
197	J-130	TRUE	32	4.96	64	179.31	64	64
199	J-124	TRUE	31	4.96	64	179.35	64	64
201	J-131	TRUE	32	0	64	179.35	64	64
203	J-95	TRUE	27	4.96	66	179.31	66	66
205	J-102	TRUE	28	4.96	65	179.31	65	65
208	J-82	TRUE	26	4.96	66	179.31	66	66
210	J-66	TRUE	25	0	67	179.31	67	67
212	J-67	TRUE	25	4.96	67	179.32	67	67
214	J-33	TRUE	22	4.96	68	179.31	68	68
216	J-26	TRUE	21	4.96	68	179.31	68	68
218	J-17	TRUE	20	4.96	69	179.31	69	69
220	J-55	TRUE	24	4.96	67	179.32	67	67
224	J-18	TRUE	20	4.96	69	179.31	69	69
226	J-132	TRUE	32	4.96	64	180.06	64	64
228	J-47	TRUE	23	4.96	68	179.32	68	68
232	J-5	TRUE	18	4.96	70	179.32	70	70
234	J-83	TRUE	26	4.96	66	179.42	66	66
237	J-114	TRUE	29	4.96	65	179.41	65	65
239	J-125	TRUE	31	4.96	64	179.47	64	64
244	J-126	TRUE	31	0	65	180.94	65	65
246	J-118	TRUE	30	4.96	65	179.8	65	65
248	J-84	TRUE	26	4.96	66	179.39	66	66

ID	Label	Is Active?	Elevation (ft)	Demand (gpm)	Pressure (psi)	Hydraulic Grade (ft)	Pressure (Minimum) (psi)	Pressure (Maximum) (psi)
250	J-103	TRUE	28	4.96	65	179.37	65	65
252	J-85	TRUE	26	4.96	66	179.27	66	66
254	J-86	TRUE	26	4.96	66	179.27	66	66
256	J-68	TRUE	25	4.96	67	179.23	67	67
262	J-69	TRUE	25	4.96	67	179.23	67	67
266	J-56	TRUE	24	4.96	67	179.22	67	67
268	J-48	TRUE	23	4.96	68	179.22	68	68
271	J-119	TRUE	30	4.96	65	179.4	65	65
273	J-70	TRUE	25	4.96	67	179.33	67	67
275	J-115	TRUE	29	4.96	65	179.31	65	65
278	J-9	TRUE	19	4.96	69	179.29	69	69
280	J-10	TRUE	19	4.96	69	179.29	69	69
283	J-27	TRUE	21	4.96	68	179.29	68	68
285	J-49	TRUE	23	4.96	68	179.29	68	68
287	J-19	TRUE	20	4.96	69	179.29	69	69
291	J-116	TRUE	29	0	65	179.29	65	65
293	J-104	TRUE	28	4.96	65	179.29	65	65
296	J-34	TRUE	22	4.96	68	179.28	68	68
298	J-105	TRUE	28	4.96	65	179.29	65	65
302	J-20	TRUE	20	4.96	69	179.29	69	69
304	J-11	TRUE	19	4.96	69	179.27	69	69
306	J-6	TRUE	18	4.96	70	179.23	70	70
308	J-57	TRUE	24	4.96	67	179.29	67	67
310	J-35	TRUE	22	4.96	68	179.28	68	68
312	J-36	TRUE	22	4.96	68	179.28	68	68
314	J-37	TRUE	22	4.96	68	179.27	68	68
316	J-106	TRUE	28	4.96	65	179.28	65	65
318	J-96	TRUE	27	4.96	66	179.28	66	66
320	J-50	TRUE	23	4.96	68	179.28	68	68
324	J-2	TRUE	17	4.96	70	179.22	70	70
342	J-98	TRUE	27.64	0	66	179.23	66	66
345	J-136	TRUE	33.62	0	63	179.25	63	63
348	J-58	TRUE	24	4.96	67	179.31	67	67
350	J-120	TRUE	30	0	65	179.31	65	65
352	J-87	TRUE	26	0	66	179.23	66	66
355	J-63	TRUE	24.78	0	67	179.23	67	67
358	J-90	TRUE	26.28	0	66	179.28	66	66
361	J-108	TRUE	28.28	0	65	179.37	65	65
364	J-123	TRUE	30.77	0	64	179.46	64	64
367	J-111	TRUE	28.45	0	65	179.39	65	65
370	J-75	TRUE	25.42	0	67	179.33	67	67
373	J-54	TRUE	23.93	0	67	179.32	67	67
376	J-25	TRUE	20.89	0	69	179.31	69	69
379	J-97	TRUE	27.22	4.96	66	179.37	66	66

ID	Label	Is Active?	Elevation (ft)	Demand (gpm)	Pressure (psi)	Hydraulic Grade (ft)	Pressure (Minimum) (psi)	Pressure (Maximum) (psi)
382	J-78	TRUE	25.92	0	66	179.42	66	66
385	J-45	TRUE	22.92	0	68	179.32	68	68
388	J-122	TRUE	30.31	0	65	180.16	65	65
391	J-88	TRUE	26	0	66	179.28	66	66
394	J-3	TRUE	18	0	70	179.22	70	70
397	J-117	TRUE	29.87	0	65	179.39	65	65
400	J-22	TRUE	20.38	0	69	179.3	69	69
403	J-44	TRUE	22.54	0	68	179.28	68	68
406	J-107	TRUE	28	0	65	179.29	65	65
409	J-40	TRUE	22.08	0	68	179.28	68	68
412	J-46	TRUE	22.93	0	68	179.28	68	68
415	J-31	TRUE	21.85	0	68	179.28	68	68
418	J-112	TRUE	28.5	4.96	65	179.23	65	65
421	J-91	TRUE	26.3	0	66	179.23	66	66
424	J-109	TRUE	28.3	0	65	179.23	65	65
427	J-135	TRUE	33.38	0	63	179.24	63	63
430	J-127	TRUE	31.1	0	64	179.34	64	64
433	J-128	TRUE	31.55	0	64	179.31	64	64
436	J-93	TRUE	26.78	0	66	179.31	66	66
439	J-76	TRUE	25.61	0	66	179.23	66	66
442	J-23	TRUE	20.43	0	69	179.31	69	69
445	J-53	TRUE	23.92	0	67	179.22	67	67
448	J-51	TRUE	23.04	0	68	179.22	68	68
451	J-71	TRUE	25	0	67	179.23	67	67
454	J-89	TRUE	26	4.96	66	179.27	66	66
457	J-92	TRUE	26.47	4.96	66	179.38	66	66
460	J-129	TRUE	31.79	0	64	179.93	64	64
463	J-52	TRUE	23.34	4.96	67	179.32	67	67
466	J-14	TRUE	19.73	0	69	179.32	69	69
469	J-73	TRUE	25.22	0	67	179.35	67	67
472	J-41	TRUE	22.26	0	68	179.32	68	68
475	J-16	TRUE	20	4.96	69	179.29	69	69
478	J-29	TRUE	21.54	4.96	68	179.29	68	68
481	J-94	TRUE	26.96	4.96	66	179.32	66	66
484	J-121	TRUE	30	0	65	179.7	65	65
487	J-77	TRUE	25.78	0	66	179.38	66	66
490	J-62	TRUE	24.39	4.96	67	179.34	67	67
493	J-60	TRUE	24.14	4.96	67	179.24	67	67
496	J-59	TRUE	24.11	4.96	67	179.22	67	67
499	J-30	TRUE	21.81	4.96	68	179.22	68	68
502	J-15	TRUE	19.74	4.96	69	179.22	69	69
505	J-7	TRUE	18.27	0	70	179.22	70	70
508	J-8	TRUE	18.55	4.96	70	179.22	70	70
511	J-21	TRUE	20.02	4.96	69	179.22	69	69

ID	Label	Is Active?	Elevation (ft)	Demand (gpm)	Pressure (psi)	Hydraulic Grade (ft)	Pressure (Minimum) (psi)	Pressure (Maximum) (psi)
514	J-32	TRUE	21.91	4.96	68	179.22	68	68
517	J-28	TRUE	21.5	4.96	68	179.23	68	68
520	J-13	TRUE	19.4	4.96	69	179.23	69	69
523	J-42	TRUE	22.36	4.96	68	179.3	68	68
526	J-24	TRUE	20.46	4.96	69	179.28	69	69
529	J-12	TRUE	19.17	0	69	179.27	69	69
532	J-74	TRUE	25.41	4.96	67	179.35	67	67
535	J-110	TRUE	28.33	0	65	179.31	65	65
538	J-43	TRUE	22.39	0	68	179.28	68	68
541	J-61	TRUE	24.19	4.96	67	179.28	67	67
544	J-72	TRUE	25.01	0	67	179.29	67	67
547	J-38	TRUE	22	4.96	68	179.28	68	68
550	J-39	TRUE	22	4.96	68	179.27	68	68

Exist Well/Booster Pumps

Nodes highlighted in red - FF failed

Existing Fire Flow

1076.11

Available FF	
<= 1000	0
1000 - 1200	2
1200 - 1500	17
> 1500	54
Total	73

0	1000
1000	1200
1200	1500
1500	3500

136

63	(N/A)
71	Passed
2	Residual Pressure Failed

ID	Label	Is Active?	Elevation (ft)	Demand (gpm)	Pressure (psi)	Hydraulic Grade (ft)	Fire Flow (Available) (gpm)	Fire Flow Status	Pressure (Minimum) (psi)	Pressure (Maximum) (psi)
166	J-64	TRUE	25	0	67	179.22	(N/A)	(N/A)	67	67
167	J-79	TRUE	26	4.96	66	179.23	(N/A)	(N/A)	66	66
169	J-133	TRUE	33	0	63	179.24	1,415.42	Passed	63	63
171	J-80	TRUE	26	4.96	66	179.23	(N/A)	(N/A)	66	66
174	J-4	TRUE	18	4.96	70	179.22	(N/A)	(N/A)	70	70
176	J-65	TRUE	25	4.96	67	179.22	1,076.11	Residual Pressure Failed	67	67
178	J-99	TRUE	28	0	65	179.23	(N/A)	(N/A)	65	65
181	J-100	TRUE	28	4.96	65	179.23	(N/A)	(N/A)	65	65
183	J-101	TRUE	28	4.96	65	179.23	(N/A)	(N/A)	65	65
185	J-113	TRUE	29	4.96	65	179.23	(N/A)	(N/A)	65	65
187	J-81	TRUE	26	4.96	66	179.23	(N/A)	(N/A)	66	66
191	J-137	TRUE	34	4.96	63	179.25	(N/A)	(N/A)	63	63
193	J-134	TRUE	33	4.96	63	179.24	(N/A)	(N/A)	63	63
197	J-130	TRUE	32	4.96	64	179.31	(N/A)	(N/A)	64	64
199	J-124	TRUE	31	4.96	64	179.35	(N/A)	(N/A)	64	64
201	J-131	TRUE	32	0	64	179.35	(N/A)	(N/A)	64	64
203	J-95	TRUE	27	4.96	66	179.31	(N/A)	(N/A)	66	66
205	J-102	TRUE	28	4.96	65	179.31	(N/A)	(N/A)	65	65
208	J-82	TRUE	26	4.96	66	179.31	(N/A)	(N/A)	66	66
210	J-66	TRUE	25	0	67	179.31	(N/A)	(N/A)	67	67
212	J-67	TRUE	25	4.96	67	179.32	(N/A)	(N/A)	67	67
214	J-33	TRUE	22	4.96	68	179.31	(N/A)	(N/A)	68	68
216	J-26	TRUE	21	4.96	68	179.31	(N/A)	(N/A)	68	68
218	J-17	TRUE	20	4.96	69	179.31	(N/A)	(N/A)	69	69
220	J-55	TRUE	24	4.96	67	179.32	(N/A)	(N/A)	67	67
224	J-18	TRUE	20	4.96	69	179.31	(N/A)	(N/A)	69	69
226	J-132	TRUE	32	4.96	64	180.06	(N/A)	(N/A)	64	64
228	J-47	TRUE	23	4.96	68	179.32	(N/A)	(N/A)	68	68
232	J-5	TRUE	18	4.96	70	179.32	(N/A)	(N/A)	70	70
234	J-83	TRUE	26	4.96	66	179.42	(N/A)	(N/A)	66	66
237	J-114	TRUE	29	4.96	65	179.41	(N/A)	(N/A)	65	65
239	J-125	TRUE	31	4.96	64	179.47	(N/A)	(N/A)	64	64
244	J-126	TRUE	31	0	65	180.94	(N/A)	(N/A)	65	65
246	J-118	TRUE	30	4.96	65	179.8	(N/A)	(N/A)	65	65
248	J-84	TRUE	26	4.96	66	179.39	(N/A)	(N/A)	66	66
250	J-103	TRUE	28	4.96	65	179.37	(N/A)	(N/A)	65	65
252	J-85	TRUE	26	4.96	66	179.27	(N/A)	(N/A)	66	66
254	J-86	TRUE	26	4.96	66	179.27	(N/A)	(N/A)	66	66
256	J-68	TRUE	25	4.96	67	179.23	(N/A)	(N/A)	67	67
262	J-69	TRUE	25	4.96	67	179.23	(N/A)	(N/A)	67	67
266	J-56	TRUE	24	4.96	67	179.22	(N/A)	(N/A)	67	67

ID	Label	Is Active?	Elevation (ft)	Demand (gpm)	Pressure (psi)	Hydraulic Grade (ft)	Fire Flow (Available) (gpm)	Fire Flow Status	Pressure (Minimum) (psi)	Pressure (Maximum) (psi)
268	J-48	TRUE	23	4.96	68	179.22	(N/A)	(N/A)	68	68
271	J-119	TRUE	30	4.96	65	179.4	(N/A)	(N/A)	65	65
273	J-70	TRUE	25	4.96	67	179.33	(N/A)	(N/A)	67	67
275	J-115	TRUE	29	4.96	65	179.31	(N/A)	(N/A)	65	65
278	J-9	TRUE	19	4.96	69	179.29	(N/A)	(N/A)	69	69
280	J-10	TRUE	19	4.96	69	179.29	(N/A)	(N/A)	69	69
283	J-27	TRUE	21	4.96	68	179.29	(N/A)	(N/A)	68	68
285	J-49	TRUE	23	4.96	68	179.29	(N/A)	(N/A)	68	68
287	J-19	TRUE	20	4.96	69	179.29	(N/A)	(N/A)	69	69
291	J-116	TRUE	29	0	65	179.29	(N/A)	(N/A)	65	65
293	J-104	TRUE	28	4.96	65	179.29	(N/A)	(N/A)	65	65
296	J-34	TRUE	22	4.96	68	179.28	(N/A)	(N/A)	68	68
298	J-105	TRUE	28	4.96	65	179.29	(N/A)	(N/A)	65	65
302	J-20	TRUE	20	4.96	69	179.29	(N/A)	(N/A)	69	69
304	J-11	TRUE	19	4.96	69	179.27	(N/A)	(N/A)	69	69
306	J-6	TRUE	18	4.96	70	179.23	(N/A)	(N/A)	70	70
308	J-57	TRUE	24	4.96	67	179.29	(N/A)	(N/A)	67	67
310	J-35	TRUE	22	4.96	68	179.28	(N/A)	(N/A)	68	68
312	J-36	TRUE	22	4.96	68	179.28	(N/A)	(N/A)	68	68
314	J-37	TRUE	22	4.96	68	179.27	(N/A)	(N/A)	68	68
316	J-106	TRUE	28	4.96	65	179.28	(N/A)	(N/A)	65	65
318	J-96	TRUE	27	4.96	66	179.28	(N/A)	(N/A)	66	66
320	J-50	TRUE	23	4.96	68	179.28	(N/A)	(N/A)	68	68
324	J-2	TRUE	17	4.96	70	179.22	(N/A)	(N/A)	70	70
342	J-98	TRUE	27.64	0	66	179.23	1,431.80	Passed	66	66
345	J-136	TRUE	33.62	0	63	179.25	1,638.17	Passed	63	63
348	J-58	TRUE	24	4.96	67	179.31	1,654.23	Passed	67	67
350	J-120	TRUE	30	0	65	179.31	1,549.66	Passed	65	65
352	J-87	TRUE	26	0	66	179.23	1,573.16	Passed	66	66
355	J-63	TRUE	24.78	0	67	179.23	1,703.20	Passed	67	67
358	J-90	TRUE	26.28	0	66	179.28	1,758.61	Passed	66	66
361	J-108	TRUE	28.28	0	65	179.37	1,831.49	Passed	65	65
364	J-123	TRUE	30.77	0	64	179.46	2,047.10	Passed	64	64
367	J-111	TRUE	28.45	0	65	179.39	1,866.59	Passed	65	65
370	J-75	TRUE	25.42	0	67	179.33	1,944.15	Passed	67	67
373	J-54	TRUE	23.93	0	67	179.32	1,969.21	Passed	67	67
376	J-25	TRUE	20.89	0	69	179.31	1,448.48	Passed	69	69
379	J-97	TRUE	27.22	4.96	66	179.37	1,571.99	Passed	66	66
382	J-78	TRUE	25.92	0	66	179.42	2,135.85	Passed	66	66
385	J-45	TRUE	22.92	0	68	179.32	2,052.59	Passed	68	68
388	J-122	TRUE	30.31	0	65	180.16	2,429.56	Passed	65	65
391	J-88	TRUE	26	0	66	179.28	1,830.70	Passed	66	66
394	J-3	TRUE	18	0	70	179.22	1,667.90	Passed	70	70
397	J-117	TRUE	29.87	0	65	179.39	1,998.58	Passed	65	65
400	J-22	TRUE	20.38	0	69	179.3	2,036.98	Passed	69	69
403	J-44	TRUE	22.54	0	68	179.28	1,856.62	Passed	68	68
406	J-107	TRUE	28	0	65	179.29	1,939.19	Passed	65	65
409	J-40	TRUE	22.08	0	68	179.28	1,421.49	Passed	68	68
412	J-46	TRUE	22.93	0	68	179.28	1,741.69	Passed	68	68
415	J-31	TRUE	21.85	0	68	179.28	1,901.92	Passed	68	68
418	J-112	TRUE	28.5	4.96	65	179.23	1,497.83	Passed	65	65
421	J-91	TRUE	26.3	0	66	179.23	1,416.59	Passed	66	66

ID	Label	Is Active?	Elevation (ft)	Demand (gpm)	Pressure (psi)	Hydraulic Grade (ft)	Fire Flow (Available) (gpm)	Fire Flow Status	Pressure (Minimum) (psi)	Pressure (Maximum) (psi)
424	J-109	TRUE	28.3	0	65	179.23	1,584.56	Passed	65	65
427	J-135	TRUE	33.38	0	63	179.24	1,502.10	Passed	63	63
430	J-127	TRUE	31.1	0	64	179.34	1,908.62	Passed	64	64
433	J-128	TRUE	31.55	0	64	179.31	1,871.11	Passed	64	64
436	J-93	TRUE	26.78	0	66	179.31	1,928.12	Passed	66	66
439	J-76	TRUE	25.61	0	66	179.23	1,555.24	Passed	66	66
442	J-23	TRUE	20.43	0	69	179.31	1,484.09	Passed	69	69
445	J-53	TRUE	23.92	0	67	179.22	1,615.99	Passed	67	67
448	J-51	TRUE	23.04	0	68	179.22	1,697.43	Passed	68	68
451	J-71	TRUE	25	0	67	179.23	1,626.00	Passed	67	67
454	J-89	TRUE	26	4.96	66	179.27	1,572.58	Passed	66	66
457	J-92	TRUE	26.47	4.96	66	179.38	1,663.12	Passed	66	66
460	J-129	TRUE	31.79	0	64	179.93	2,316.99	Passed	64	64
463	J-52	TRUE	23.34	4.96	67	179.32	1,972.46	Passed	67	67
466	J-14	TRUE	19.73	0	69	179.32	1,091.54	Residual Pressure Failed	69	69
469	J-73	TRUE	25.22	0	67	179.35	2,054.80	Passed	67	67
472	J-41	TRUE	22.26	0	68	179.32	2,050.01	Passed	68	68
475	J-16	TRUE	20	4.96	69	179.29	1,682.98	Passed	69	69
478	J-29	TRUE	21.54	4.96	68	179.29	1,943.29	Passed	68	68
481	J-94	TRUE	26.96	4.96	66	179.32	1,978.19	Passed	66	66
484	J-121	TRUE	30	0	65	179.7	2,125.54	Passed	65	65
487	J-77	TRUE	25.78	0	66	179.38	1,859.64	Passed	66	66
490	J-62	TRUE	24.39	4.96	67	179.34	1,476.39	Passed	67	67
493	J-60	TRUE	24.14	4.96	67	179.24	1,429.37	Passed	67	67
496	J-59	TRUE	24.11	4.96	67	179.22	1,516.54	Passed	67	67
499	J-30	TRUE	21.81	4.96	68	179.22	1,351.91	Passed	68	68
502	J-15	TRUE	19.74	4.96	69	179.22	1,426.30	Passed	69	69
505	J-7	TRUE	18.27	0	70	179.22	1,677.24	Passed	70	70
508	J-8	TRUE	18.55	4.96	70	179.22	1,633.75	Passed	70	70
511	J-21	TRUE	20.02	4.96	69	179.22	1,618.79	Passed	69	69
514	J-32	TRUE	21.91	4.96	68	179.22	1,649.66	Passed	68	68
517	J-28	TRUE	21.5	4.96	68	179.23	1,355.93	Passed	68	68
520	J-13	TRUE	19.4	4.96	69	179.23	1,488.34	Passed	69	69
523	J-42	TRUE	22.36	4.96	68	179.3	1,376.60	Passed	68	68
526	J-24	TRUE	20.46	4.96	69	179.28	1,487.41	Passed	69	69
529	J-12	TRUE	19.17	0	69	179.27	1,792.35	Passed	69	69
532	J-74	TRUE	25.41	4.96	67	179.35	1,865.92	Passed	67	67
535	J-110	TRUE	28.33	0	65	179.31	1,995.08	Passed	65	65
538	J-43	TRUE	22.39	0	68	179.28	1,947.45	Passed	68	68
541	J-61	TRUE	24.19	4.96	67	179.28	1,864.07	Passed	67	67
544	J-72	TRUE	25.01	0	67	179.29	1,943.65	Passed	67	67
547	J-38	TRUE	22	4.96	68	179.28	1,427.03	Passed	68	68
550	J-39	TRUE	22	4.96	68	179.27	1,344.38	Passed	68	68

Future MDD1 (Holland St Intertie Active)

total demand	411.68
Pressure	
<= 50	0
50 - 70	21
70 - 80	115
> 80	0
	136

0	50
50	70
70	80
80	200

ID	Label	Is Active?	Elevation (ft)	Demand (gpm)	Pressure (psi)	Hydraulic Grade (ft)	Pressure (Minimum) (psi)	Pressure (Maximum) (psi)
166	J-64	TRUE	25	0	73	192.72	73	73
167	J-79	TRUE	26	4.96	72	192.72	72	72
169	J-133	TRUE	33	0	69	192.68	69	69
171	J-80	TRUE	26	4.96	72	192.8	72	72
174	J-4	TRUE	18	4.96	76	193.73	76	76
176	J-65	TRUE	25	4.96	73	192.72	73	73
178	J-99	TRUE	28	0	71	192.7	71	71
181	J-100	TRUE	28	4.96	71	192.69	71	71
183	J-101	TRUE	28	4.96	71	192.7	71	71
185	J-113	TRUE	29	4.96	71	192.69	71	71
187	J-81	TRUE	26	4.96	72	192.71	72	72
191	J-137	TRUE	34	4.96	69	192.68	69	69
193	J-134	TRUE	33	4.96	69	192.68	69	69
197	J-130	TRUE	32	4.96	70	192.65	70	70
199	J-124	TRUE	31	4.96	70	192.65	70	70
201	J-131	TRUE	32	0	70	192.65	70	70
203	J-95	TRUE	27	4.96	72	192.63	72	72
205	J-102	TRUE	28	4.96	71	192.63	71	71
208	J-82	TRUE	26	4.96	72	192.61	72	72
210	J-66	TRUE	25	0	73	192.6	73	73
212	J-67	TRUE	25	4.96	73	192.59	73	73
214	J-33	TRUE	22	4.96	74	192.57	74	74
216	J-26	TRUE	21	4.96	74	192.58	74	74
218	J-17	TRUE	20	4.96	75	192.58	75	75
220	J-55	TRUE	24	4.96	73	192.58	73	73
224	J-18	TRUE	20	4.96	75	192.58	75	75
226	J-132	TRUE	32	4.96	70	192.67	70	70
228	J-47	TRUE	23	4.96	73	192.57	73	73
232	J-5	TRUE	18	4.96	76	192.57	76	76
234	J-83	TRUE	26	4.96	72	192.59	72	72
237	J-114	TRUE	29	4.96	71	192.61	71	71
239	J-125	TRUE	31	4.96	70	192.67	70	70

ID	Label	Is Active?	Elevation (ft)	Demand (gpm)	Pressure (psi)	Hydraulic Grade (ft)	Pressure (Minimum) (psi)	Pressure (Maximum) (psi)
244	J-126	TRUE	31	0	70	192.68	70	70
246	J-118	TRUE	30	4.96	70	192.72	70	70
248	J-84	TRUE	26	4.96	72	192.98	72	72
250	J-103	TRUE	28	4.96	71	192.98	71	71
252	J-85	TRUE	26	4.96	72	193.39	72	72
254	J-86	TRUE	26	4.96	72	193.37	72	72
256	J-68	TRUE	25	4.96	73	193.83	73	73
262	J-69	TRUE	25	4.96	73	193.7	73	73
266	J-56	TRUE	24	4.96	74	194.8	74	74
268	J-48	TRUE	23	4.96	74	195.16	74	74
271	J-119	TRUE	30	4.96	70	192.67	70	70
273	J-70	TRUE	25	4.96	73	192.57	73	73
275	J-115	TRUE	29	4.96	71	192.57	71	71
278	J-9	TRUE	19	4.96	75	192.55	75	75
280	J-10	TRUE	19	4.96	75	192.55	75	75
283	J-27	TRUE	21	4.96	74	192.56	74	74
285	J-49	TRUE	23	4.96	73	192.56	73	73
287	J-19	TRUE	20	4.96	75	192.56	75	75
291	J-116	TRUE	29	0	71	192.56	71	71
293	J-104	TRUE	28	4.96	71	192.56	71	71
296	J-34	TRUE	22	4.96	74	192.56	74	74
298	J-105	TRUE	28	4.96	71	192.56	71	71
302	J-20	TRUE	20	4.96	75	192.71	75	75
304	J-11	TRUE	19	4.96	75	192.99	75	75
306	J-6	TRUE	18	4.96	76	193.5	76	76
308	J-57	TRUE	24	4.96	73	192.57	73	73
310	J-35	TRUE	22	4.96	74	192.57	74	74
312	J-36	TRUE	22	4.96	74	192.58	74	74
314	J-37	TRUE	22	4.96	74	192.55	74	74
316	J-106	TRUE	28	4.96	71	192.56	71	71
318	J-96	TRUE	27	4.96	72	192.56	72	72
320	J-50	TRUE	23	4.96	73	192.56	73	73
324	J-2	TRUE	17	4.96	77	193.99	77	77
342	J-98	TRUE	27.64	0	71	192.71	71	71
345	J-136	TRUE	33.62	0	69	192.68	69	69
348	J-58	TRUE	24	4.96	73	192.61	73	73
350	J-120	TRUE	30	0	70	192.63	70	70
352	J-87	TRUE	26	0	72	192.74	72	72
355	J-63	TRUE	24.78	0	73	193.94	73	73
358	J-90	TRUE	26.28	0	72	193.31	72	72
361	J-108	TRUE	28.28	0	71	192.95	71	71

ID	Label	Is Active?	Elevation (ft)	Demand (gpm)	Pressure (psi)	Hydraulic Grade (ft)	Pressure (Minimum) (psi)	Pressure (Maximum) (psi)
364	J-123	TRUE	30.77	0	70	192.66	70	70
367	J-111	TRUE	28.45	0	71	192.61	71	71
370	J-75	TRUE	25.42	0	72	192.59	72	72
373	J-54	TRUE	23.93	0	73	192.58	73	73
376	J-25	TRUE	20.89	0	74	192.58	74	74
379	J-97	TRUE	27.22	4.96	72	192.98	72	72
382	J-78	TRUE	25.92	0	72	192.59	72	72
385	J-45	TRUE	22.92	0	73	192.57	73	73
388	J-122	TRUE	30.31	0	70	192.71	70	70
391	J-88	TRUE	26	0	72	193.33	72	72
394	J-3	TRUE	18	0	76	194.03	76	76
397	J-117	TRUE	29.87	0	70	192.65	70	70
400	J-22	TRUE	20.38	0	74	192.56	74	74
403	J-44	TRUE	22.54	0	74	192.56	74	74
406	J-107	TRUE	28	0	71	192.56	71	71
409	J-40	TRUE	22.08	0	74	192.55	74	74
412	J-46	TRUE	22.93	0	73	192.56	73	73
415	J-31	TRUE	21.85	0	74	192.59	74	74
418	J-112	TRUE	28.5	4.96	71	192.7	71	71
421	J-91	TRUE	26.3	0	72	192.72	72	72
424	J-109	TRUE	28.3	0	71	192.7	71	71
427	J-135	TRUE	33.38	0	69	192.68	69	69
430	J-127	TRUE	31.1	0	70	192.65	70	70
433	J-128	TRUE	31.55	0	70	192.65	70	70
436	J-93	TRUE	26.78	0	72	192.63	72	72
439	J-76	TRUE	25.61	0	72	193.15	72	72
442	J-23	TRUE	20.43	0	74	192.58	74	74
445	J-53	TRUE	23.92	0	74	194.83	74	74
448	J-51	TRUE	23.04	0	75	195.24	75	75
451	J-71	TRUE	25	0	73	193.8	73	73
454	J-89	TRUE	26	4.96	72	193.37	72	72
457	J-92	TRUE	26.47	4.96	72	192.98	72	72
460	J-129	TRUE	31.79	0	70	192.67	70	70
463	J-52	TRUE	23.34	4.96	73	192.58	73	73
466	J-14	TRUE	19.73	0	75	192.57	75	75
469	J-73	TRUE	25.22	0	72	192.58	72	72
472	J-41	TRUE	22.26	0	74	192.57	74	74
475	J-16	TRUE	20	4.96	75	192.55	75	75
478	J-29	TRUE	21.54	4.96	74	192.56	74	74
481	J-94	TRUE	26.96	4.96	72	192.57	72	72
484	J-121	TRUE	30	0	70	192.71	70	70

ID	Label	Is Active?	Elevation (ft)	Demand (gpm)	Pressure (psi)	Hydraulic Grade (ft)	Pressure (Minimum) (psi)	Pressure (Maximum) (psi)
487	J-77	TRUE	25.78	0	72	192.98	72	72
490	J-62	TRUE	24.39	4.96	73	192.98	73	73
493	J-60	TRUE	24.14	4.96	73	193.39	73	73
496	J-59	TRUE	24.11	4.96	73	193.81	73	73
499	J-30	TRUE	21.81	4.96	74	193.76	74	74
502	J-15	TRUE	19.74	4.96	75	193.74	75	75
505	J-7	TRUE	18.27	0	76	193.73	76	76
508	J-8	TRUE	18.55	4.96	76	194.26	76	76
511	J-21	TRUE	20.02	4.96	76	194.54	76	76
514	J-32	TRUE	21.91	4.96	75	194.92	75	75
517	J-28	TRUE	21.5	4.96	74	193.42	74	74
520	J-13	TRUE	19.4	4.96	75	193.46	75	75
523	J-42	TRUE	22.36	4.96	74	192.98	74	74
526	J-24	TRUE	20.46	4.96	75	192.98	75	75
529	J-12	TRUE	19.17	0	75	192.99	75	75
532	J-74	TRUE	25.41	4.96	72	192.68	72	72
535	J-110	TRUE	28.33	0	71	192.57	71	71
538	J-43	TRUE	22.39	0	74	192.57	74	74
541	J-61	TRUE	24.19	4.96	73	192.56	73	73
544	J-72	TRUE	25.01	0	72	192.57	72	72
547	J-38	TRUE	22	4.96	74	192.55	74	74
550	J-39	TRUE	22	4.96	74	192.55	74	74

FF1 - Holland St
Intertie active

Nodes highlighted
in red - FF failed

Proposed Intertie
at Holland St

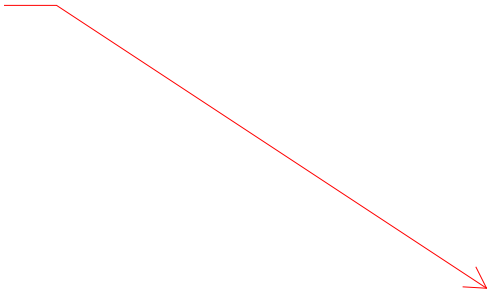

Future FF1 (Holland St Intertie Active)

1013.88

Available FF	
<= 1000	0
1000 - 120	3
1200 - 150	28
> 1500	42
Total	73

0	1000	
1000	1200	
1200	1500	
1500	3500	

	136	
	63	(N/A)
	70	Passed
	3	Residual Pressure Failed

136

ID	Label	Is Active?	Elevation (ft)	Demand (gpm)	Pressure (psi)	Hydraulic Grade (ft)	Fire Flow (Needed) (gpm)	Fire Flow (Available) (gpm)	Fire Flow Status	Pressure (Minimum) (psi)	Pressure (Maximum) (psi)
166	J-64	TRUE	25	0	73	192.72	1,200.00	(N/A)	(N/A)	73	73
167	J-79	TRUE	26	4.96	72	192.72	1,200.00	(N/A)	(N/A)	72	72
171	J-80	TRUE	26	4.96	72	192.8	1,200.00	(N/A)	(N/A)	72	72
174	J-4	TRUE	18	4.96	76	193.73	1,200.00	(N/A)	(N/A)	76	76
178	J-99	TRUE	28	0	71	192.7	1,200.00	(N/A)	(N/A)	71	71
181	J-100	TRUE	28	4.96	71	192.69	1,200.00	(N/A)	(N/A)	71	71
183	J-101	TRUE	28	4.96	71	192.7	1,200.00	(N/A)	(N/A)	71	71
185	J-113	TRUE	29	4.96	71	192.69	1,200.00	(N/A)	(N/A)	71	71
187	J-81	TRUE	26	4.96	72	192.71	1,200.00	(N/A)	(N/A)	72	72
191	J-137	TRUE	34	4.96	69	192.68	1,200.00	(N/A)	(N/A)	69	69
193	J-134	TRUE	33	4.96	69	192.68	1,200.00	(N/A)	(N/A)	69	69
197	J-130	TRUE	32	4.96	70	192.65	1,200.00	(N/A)	(N/A)	70	70
199	J-124	TRUE	31	4.96	70	192.65	1,200.00	(N/A)	(N/A)	70	70
201	J-131	TRUE	32	0	70	192.65	1,200.00	(N/A)	(N/A)	70	70
203	J-95	TRUE	27	4.96	72	192.63	1,200.00	(N/A)	(N/A)	72	72
205	J-102	TRUE	28	4.96	71	192.63	1,200.00	(N/A)	(N/A)	71	71
208	J-82	TRUE	26	4.96	72	192.61	1,200.00	(N/A)	(N/A)	72	72
210	J-66	TRUE	25	0	73	192.6	1,200.00	(N/A)	(N/A)	73	73
212	J-67	TRUE	25	4.96	73	192.59	1,200.00	(N/A)	(N/A)	73	73
214	J-33	TRUE	22	4.96	74	192.57	1,200.00	(N/A)	(N/A)	74	74
216	J-26	TRUE	21	4.96	74	192.58	1,200.00	(N/A)	(N/A)	74	74
218	J-17	TRUE	20	4.96	75	192.58	1,200.00	(N/A)	(N/A)	75	75
220	J-55	TRUE	24	4.96	73	192.58	1,200.00	(N/A)	(N/A)	73	73
224	J-18	TRUE	20	4.96	75	192.58	1,200.00	(N/A)	(N/A)	75	75
226	J-132	TRUE	32	4.96	70	192.67	1,200.00	(N/A)	(N/A)	70	70
228	J-47	TRUE	23	4.96	73	192.57	1,200.00	(N/A)	(N/A)	73	73
232	J-5	TRUE	18	4.96	76	192.57	1,200.00	(N/A)	(N/A)	76	76
234	J-83	TRUE	26	4.96	72	192.59	1,200.00	(N/A)	(N/A)	72	72
237	J-114	TRUE	29	4.96	71	192.61	1,200.00	(N/A)	(N/A)	71	71
239	J-125	TRUE	31	4.96	70	192.67	1,200.00	(N/A)	(N/A)	70	70
244	J-126	TRUE	31	0	70	192.68	1,200.00	(N/A)	(N/A)	70	70
246	J-118	TRUE	30	4.96	70	192.72	1,200.00	(N/A)	(N/A)	70	70
248	J-84	TRUE	26	4.96	72	192.98	1,200.00	(N/A)	(N/A)	72	72
250	J-103	TRUE	28	4.96	71	192.98	1,200.00	(N/A)	(N/A)	71	71
252	J-85	TRUE	26	4.96	72	193.39	1,200.00	(N/A)	(N/A)	72	72
254	J-86	TRUE	26	4.96	72	193.37	1,200.00	(N/A)	(N/A)	72	72
256	J-68	TRUE	25	4.96	73	193.83	1,200.00	(N/A)	(N/A)	73	73
262	J-69	TRUE	25	4.96	73	193.7	1,200.00	(N/A)	(N/A)	73	73
266	J-56	TRUE	24	4.96	74	194.8	1,200.00	(N/A)	(N/A)	74	74
268	J-48	TRUE	23	4.96	74	195.16	1,200.00	(N/A)	(N/A)	74	74
271	J-119	TRUE	30	4.96	70	192.67	1,200.00	(N/A)	(N/A)	70	70
273	J-70	TRUE	25	4.96	73	192.57	1,200.00	(N/A)	(N/A)	73	73
275	J-115	TRUE	29	4.96	71	192.57	1,200.00	(N/A)	(N/A)	71	71
278	J-9	TRUE	19	4.96	75	192.55	1,200.00	(N/A)	(N/A)	75	75
280	J-10	TRUE	19	4.96	75	192.55	1,200.00	(N/A)	(N/A)	75	75
283	J-27	TRUE	21	4.96	74	192.56	1,200.00	(N/A)	(N/A)	74	74

ID	Label	Is Active?	Elevation (ft)	Demand (gpm)	Pressure (psi)	Hydraulic Grade (ft)	Fire Flow (Needed) (gpm)	Fire Flow (Available) (gpm)	Fire Flow Status	Pressure (Minimum) (psi)	Pressure (Maximum) (psi)
285	J-49	TRUE	23	4.96	73	192.56	1,200.00	(N/A)	(N/A)	73	73
287	J-19	TRUE	20	4.96	75	192.56	1,200.00	(N/A)	(N/A)	75	75
291	J-116	TRUE	29	0	71	192.56	1,200.00	(N/A)	(N/A)	71	71
293	J-104	TRUE	28	4.96	71	192.56	1,200.00	(N/A)	(N/A)	71	71
296	J-34	TRUE	22	4.96	74	192.56	1,200.00	(N/A)	(N/A)	74	74
298	J-105	TRUE	28	4.96	71	192.56	1,200.00	(N/A)	(N/A)	71	71
302	J-20	TRUE	20	4.96	75	192.71	1,200.00	(N/A)	(N/A)	75	75
304	J-11	TRUE	19	4.96	75	192.99	1,200.00	(N/A)	(N/A)	75	75
306	J-6	TRUE	18	4.96	76	193.5	1,200.00	(N/A)	(N/A)	76	76
308	J-57	TRUE	24	4.96	73	192.57	1,200.00	(N/A)	(N/A)	73	73
310	J-35	TRUE	22	4.96	74	192.57	1,200.00	(N/A)	(N/A)	74	74
312	J-36	TRUE	22	4.96	74	192.58	1,200.00	(N/A)	(N/A)	74	74
314	J-37	TRUE	22	4.96	74	192.55	1,200.00	(N/A)	(N/A)	74	74
316	J-106	TRUE	28	4.96	71	192.56	1,200.00	(N/A)	(N/A)	71	71
318	J-96	TRUE	27	4.96	72	192.56	1,200.00	(N/A)	(N/A)	72	72
320	J-50	TRUE	23	4.96	73	192.56	1,200.00	(N/A)	(N/A)	73	73
324	J-2	TRUE	17	4.96	77	193.99	1,200.00	(N/A)	(N/A)	77	77
169	J-133	TRUE	33	0	69	192.68	1,200.00	1,297.45	Passed	69	69
342	J-98	TRUE	27.64	0	71	192.71	1,200.00	1,326.96	Passed	71	71
345	J-136	TRUE	33.62	0	69	192.68	1,200.00	1,440.61	Passed	69	69
348	J-58	TRUE	24	4.96	73	192.61	1,200.00	1,399.48	Passed	73	73
350	J-120	TRUE	30	0	70	192.63	1,200.00	1,338.04	Passed	70	70
352	J-87	TRUE	26	0	72	192.74	1,200.00	1,430.64	Passed	72	72
355	J-63	TRUE	24.78	0	73	193.94	1,200.00	1,925.80	Passed	73	73
358	J-90	TRUE	26.28	0	72	193.31	1,200.00	1,684.43	Passed	72	72
361	J-108	TRUE	28.28	0	71	192.95	1,200.00	1,598.67	Passed	71	71
364	J-123	TRUE	30.77	0	70	192.66	1,200.00	1,553.35	Passed	70	70
367	J-111	TRUE	28.45	0	71	192.61	1,200.00	1,471.22	Passed	71	71
370	J-75	TRUE	25.42	0	72	192.59	1,200.00	1,523.16	Passed	72	72
373	J-54	TRUE	23.93	0	73	192.58	1,200.00	1,536.07	Passed	73	73
376	J-25	TRUE	20.89	0	74	192.58	1,200.00	1,264.83	Passed	74	74
379	J-97	TRUE	27.22	4.96	72	192.98	1,200.00	1,433.73	Passed	72	72
382	J-78	TRUE	25.92	0	72	192.59	1,200.00	1,571.81	Passed	72	72
385	J-45	TRUE	22.92	0	73	192.57	1,200.00	1,563.51	Passed	73	73
388	J-122	TRUE	30.31	0	70	192.71	1,200.00	1,546.56	Passed	70	70
391	J-88	TRUE	26	0	72	193.33	1,200.00	1,771.51	Passed	72	72
394	J-3	TRUE	18	0	76	194.03	1,200.00	1,937.95	Passed	76	76
397	J-117	TRUE	29.87	0	70	192.65	1,200.00	1,536.57	Passed	70	70
400	J-22	TRUE	20.38	0	74	192.56	1,200.00	1,570.59	Passed	74	74
403	J-44	TRUE	22.54	0	74	192.56	1,200.00	1,486.62	Passed	74	74
406	J-107	TRUE	28	0	71	192.56	1,200.00	1,512.90	Passed	71	71
409	J-40	TRUE	22.08	0	74	192.55	1,200.00	1,246.81	Passed	74	74
412	J-46	TRUE	22.93	0	73	192.56	1,200.00	1,433.02	Passed	73	73
415	J-31	TRUE	21.85	0	74	192.59	1,200.00	1,526.17	Passed	74	74
418	J-112	TRUE	28.5	4.96	71	192.7	1,200.00	1,370.74	Passed	71	71
421	J-91	TRUE	26.3	0	72	192.72	1,200.00	1,318.63	Passed	72	72
424	J-109	TRUE	28.3	0	71	192.7	1,200.00	1,427.38	Passed	71	71
427	J-135	TRUE	33.38	0	69	192.68	1,200.00	1,355.78	Passed	69	69
430	J-127	TRUE	31.1	0	70	192.65	1,200.00	1,529.01	Passed	70	70
433	J-128	TRUE	31.55	0	70	192.65	1,200.00	1,527.84	Passed	70	70
436	J-93	TRUE	26.78	0	72	192.63	1,200.00	1,547.46	Passed	72	72
439	J-76	TRUE	25.61	0	72	193.15	1,200.00	1,491.08	Passed	72	72
442	J-23	TRUE	20.43	0	74	192.58	1,200.00	1,287.24	Passed	74	74
445	J-53	TRUE	23.92	0	74	194.83	1,200.00	2,188.42	Passed	74	74
448	J-51	TRUE	23.04	0	75	195.24	1,200.00	2,805.99	Passed	75	75
451	J-71	TRUE	25	0	73	193.8	1,200.00	1,795.54	Passed	73	73

ID	Label	Is Active?	Elevation (ft)	Demand (gpm)	Pressure (psi)	Hydraulic Grade (ft)	Fire Flow (Needed) (gpm)	Fire Flow (Available) (gpm)	Fire Flow Status	Pressure (Minimum) (psi)	Pressure (Maximum) (psi)
454	J-89	TRUE	26	4.96	72	193.37	1,200.00	1,566.92	Passed	72	72
457	J-92	TRUE	26.47	4.96	72	192.98	1,200.00	1,492.85	Passed	72	72
460	J-129	TRUE	31.79	0	70	192.67	1,200.00	1,539.77	Passed	70	70
463	J-52	TRUE	23.34	4.96	73	192.58	1,200.00	1,531.38	Passed	73	73
469	J-73	TRUE	25.22	0	72	192.58	1,200.00	1,555.05	Passed	72	72
472	J-41	TRUE	22.26	0	74	192.57	1,200.00	1,566.32	Passed	74	74
475	J-16	TRUE	20	4.96	75	192.55	1,200.00	1,398.55	Passed	75	75
478	J-29	TRUE	21.54	4.96	74	192.56	1,200.00	1,526.40	Passed	74	74
481	J-94	TRUE	26.96	4.96	72	192.57	1,200.00	1,526.01	Passed	72	72
484	J-121	TRUE	30	0	70	192.71	1,200.00	1,548.62	Passed	70	70
487	J-77	TRUE	25.78	0	72	192.98	1,200.00	1,618.70	Passed	72	72
490	J-62	TRUE	24.39	4.96	73	192.98	1,200.00	1,368.41	Passed	73	73
493	J-60	TRUE	24.14	4.96	73	193.39	1,200.00	1,463.39	Passed	73	73
496	J-59	TRUE	24.11	4.96	73	193.81	1,200.00	1,685.52	Passed	73	73
499	J-30	TRUE	21.81	4.96	74	193.76	1,200.00	1,479.16	Passed	74	74
502	J-15	TRUE	19.74	4.96	75	193.74	1,200.00	1,558.62	Passed	75	75
505	J-7	TRUE	18.27	0	76	193.73	1,200.00	1,837.56	Passed	76	76
508	J-8	TRUE	18.55	4.96	76	194.26	1,200.00	1,970.77	Passed	76	76
511	J-21	TRUE	20.02	4.96	76	194.54	1,200.00	2,052.93	Passed	76	76
514	J-32	TRUE	21.91	4.96	75	194.92	1,200.00	2,315.11	Passed	75	75
517	J-28	TRUE	21.5	4.96	74	193.42	1,200.00	1,400.57	Passed	74	74
520	J-13	TRUE	19.4	4.96	75	193.46	1,200.00	1,542.62	Passed	75	75
523	J-42	TRUE	22.36	4.96	74	192.98	1,200.00	1,300.32	Passed	74	74
526	J-24	TRUE	20.46	4.96	75	192.98	1,200.00	1,394.18	Passed	75	75
529	J-12	TRUE	19.17	0	75	192.99	1,200.00	1,630.84	Passed	75	75
532	J-74	TRUE	25.41	4.96	72	192.68	1,200.00	1,510.05	Passed	72	72
535	J-110	TRUE	28.33	0	71	192.57	1,200.00	1,537.04	Passed	71	71
538	J-43	TRUE	22.39	0	74	192.57	1,200.00	1,537.72	Passed	74	74
541	J-61	TRUE	24.19	4.96	73	192.56	1,200.00	1,492.76	Passed	73	73
544	J-72	TRUE	25.01	0	72	192.57	1,200.00	1,525.89	Passed	72	72
547	J-38	TRUE	22	4.96	74	192.55	1,200.00	1,249.09	Passed	74	74
176	J-65	TRUE	25	4.96	73	192.72	1,200.00	1,049.57	Residual Pressure Failed	73	73
466	J-14	TRUE	19.73	0	75	192.57	1,200.00	1,013.88	Residual Pressure Failed	75	75
550	J-39	TRUE	22	4.96	74	192.55	1,200.00	1,196.03	Residual Pressure Failed	74	74

Future MDD2 (Green St Intertie Active)

total demand	411.68
Pressure	
<= 50	0
50 - 70	14
70 - 80	122
> 80	0
	136

0	50
50	70
70	80
80	200

ID	Label	Is Active?	Elevation (ft)	Demand (gpm)	Pressure (psi)	Hydraulic Grade (ft)	Pressure (Minimum) (psi)	Pressure (Maximum) (psi)
166	J-64	TRUE	25	0	74	196.07	74	74
167	J-79	TRUE	26	4.96	74	196.07	74	74
169	J-133	TRUE	33	0	70	195.3	70	70
171	J-80	TRUE	26	4.96	74	196.74	74	74
174	J-4	TRUE	18	4.96	76	193.5	76	76
176	J-65	TRUE	25	4.96	74	196.07	74	74
178	J-99	TRUE	28	0	73	195.58	73	73
181	J-100	TRUE	28	4.96	73	195.58	73	73
183	J-101	TRUE	28	4.96	73	195.8	73	73
185	J-113	TRUE	29	4.96	72	195.56	72	72
187	J-81	TRUE	26	4.96	73	195.75	73	73
191	J-137	TRUE	34	4.96	70	195.12	70	70
193	J-134	TRUE	33	4.96	70	195.3	70	70
197	J-130	TRUE	32	4.96	70	194.21	70	70
199	J-124	TRUE	31	4.96	71	193.97	71	71
201	J-131	TRUE	32	0	70	193.97	70	70
203	J-95	TRUE	27	4.96	72	193.98	72	72
205	J-102	TRUE	28	4.96	72	193.98	72	72
208	J-82	TRUE	26	4.96	73	193.86	73	73
210	J-66	TRUE	25	0	73	193.8	73	73
212	J-67	TRUE	25	4.96	73	193.66	73	73
214	J-33	TRUE	22	4.96	74	193.45	74	74
216	J-26	TRUE	21	4.96	75	193.63	75	75
218	J-17	TRUE	20	4.96	75	193.62	75	75
220	J-55	TRUE	24	4.96	73	193.62	73	73
224	J-18	TRUE	20	4.96	75	193.62	75	75
226	J-132	TRUE	32	4.96	70	193.56	70	70
228	J-47	TRUE	23	4.96	74	193.51	74	74
232	J-5	TRUE	18	4.96	76	193.51	76	76
234	J-83	TRUE	26	4.96	72	193.52	72	72
237	J-114	TRUE	29	4.96	71	193.65	71	71
239	J-125	TRUE	31	4.96	70	193.69	70	70

ID	Label	Is Active?	Elevation (ft)	Demand (gpm)	Pressure (psi)	Hydraulic Grade (ft)	Pressure (Minimum) (psi)	Pressure (Maximum) (psi)
244	J-126	TRUE	31	0	70	193.55	70	70
246	J-118	TRUE	30	4.96	71	193.51	71	71
248	J-84	TRUE	26	4.96	72	193.53	72	72
250	J-103	TRUE	28	4.96	72	193.66	72	72
252	J-85	TRUE	26	4.96	72	193.56	72	72
254	J-86	TRUE	26	4.96	73	193.69	73	73
256	J-68	TRUE	25	4.96	73	193.59	73	73
262	J-69	TRUE	25	4.96	73	193.87	73	73
266	J-56	TRUE	24	4.96	73	193.66	73	73
268	J-48	TRUE	23	4.96	74	193.59	74	74
271	J-119	TRUE	30	4.96	71	193.44	71	71
273	J-70	TRUE	25	4.96	73	193.45	73	73
275	J-115	TRUE	29	4.96	71	193.42	71	71
278	J-9	TRUE	19	4.96	75	193.41	75	75
280	J-10	TRUE	19	4.96	75	193.41	75	75
283	J-27	TRUE	21	4.96	75	193.41	75	75
285	J-49	TRUE	23	4.96	74	193.41	74	74
287	J-19	TRUE	20	4.96	75	193.42	75	75
291	J-116	TRUE	29	0	71	193.41	71	71
293	J-104	TRUE	28	4.96	72	193.41	72	72
296	J-34	TRUE	22	4.96	74	193.4	74	74
298	J-105	TRUE	28	4.96	72	193.4	72	72
302	J-20	TRUE	20	4.96	75	193.43	75	75
304	J-11	TRUE	19	4.96	75	193.46	75	75
306	J-6	TRUE	18	4.96	76	193.49	76	76
308	J-57	TRUE	24	4.96	73	193.4	73	73
310	J-35	TRUE	22	4.96	74	193.4	74	74
312	J-36	TRUE	22	4.96	74	193.4	74	74
314	J-37	TRUE	22	4.96	74	193.39	74	74
316	J-106	TRUE	28	4.96	72	193.4	72	72
318	J-96	TRUE	27	4.96	72	193.4	72	72
320	J-50	TRUE	23	4.96	74	193.4	74	74
324	J-2	TRUE	17	4.96	76	193.51	76	76
342	J-98	TRUE	27.64	0	73	195.85	73	73
345	J-136	TRUE	33.62	0	70	195.15	70	70
348	J-58	TRUE	24	4.96	73	193.86	73	73
350	J-120	TRUE	30	0	71	193.98	71	71
352	J-87	TRUE	26	0	74	196.04	74	74
355	J-63	TRUE	24.78	0	73	193.82	73	73
358	J-90	TRUE	26.28	0	72	193.68	72	72
361	J-108	TRUE	28.28	0	72	193.66	72	72

ID	Label	Is Active?	Elevation (ft)	Demand (gpm)	Pressure (psi)	Hydraulic Grade (ft)	Pressure (Minimum) (psi)	Pressure (Maximum) (psi)
364	J-123	TRUE	30.77	0	70	193.68	70	70
367	J-111	TRUE	28.45	0	71	193.65	71	71
370	J-75	TRUE	25.42	0	73	193.65	73	73
373	J-54	TRUE	23.93	0	73	193.62	73	73
376	J-25	TRUE	20.89	0	75	193.63	75	75
379	J-97	TRUE	27.22	4.96	72	193.59	72	72
382	J-78	TRUE	25.92	0	73	193.51	73	73
385	J-45	TRUE	22.92	0	74	193.51	74	74
388	J-122	TRUE	30.31	0	71	193.52	71	71
391	J-88	TRUE	26	0	72	193.56	72	72
394	J-3	TRUE	18	0	76	193.51	76	76
397	J-117	TRUE	29.87	0	71	193.44	71	71
400	J-22	TRUE	20.38	0	75	193.42	75	75
403	J-44	TRUE	22.54	0	74	193.4	74	74
406	J-107	TRUE	28	0	72	193.4	72	72
409	J-40	TRUE	22.08	0	74	193.39	74	74
412	J-46	TRUE	22.93	0	74	193.4	74	74
415	J-31	TRUE	21.85	0	74	193.41	74	74
418	J-112	TRUE	28.5	4.96	72	195.67	72	72
421	J-91	TRUE	26.3	0	73	196.03	73	73
424	J-109	TRUE	28.3	0	72	195.61	72	72
427	J-135	TRUE	33.38	0	70	195.23	70	70
430	J-127	TRUE	31.1	0	70	193.99	70	70
433	J-128	TRUE	31.55	0	70	194.19	70	70
436	J-93	TRUE	26.78	0	72	193.95	72	72
439	J-76	TRUE	25.61	0	74	195.62	74	74
442	J-23	TRUE	20.43	0	75	193.62	75	75
445	J-53	TRUE	23.92	0	73	193.66	73	73
448	J-51	TRUE	23.04	0	74	193.6	74	74
451	J-71	TRUE	25	0	73	193.66	73	73
454	J-89	TRUE	26	4.96	73	193.6	73	73
457	J-92	TRUE	26.47	4.96	72	193.55	72	72
460	J-129	TRUE	31.79	0	70	193.59	70	70
463	J-52	TRUE	23.34	4.96	74	193.54	74	74
466	J-14	TRUE	19.73	0	75	193.51	75	75
469	J-73	TRUE	25.22	0	73	193.46	73	73
472	J-41	TRUE	22.26	0	74	193.46	74	74
475	J-16	TRUE	20	4.96	75	193.41	75	75
478	J-29	TRUE	21.54	4.96	74	193.41	74	74
481	J-94	TRUE	26.96	4.96	72	193.43	72	72
484	J-121	TRUE	30	0	71	193.5	71	71

ID	Label	Is Active?	Elevation (ft)	Demand (gpm)	Pressure (psi)	Hydraulic Grade (ft)	Pressure (Minimum) (psi)	Pressure (Maximum) (psi)
487	J-77	TRUE	25.78	0	73	193.53	73	73
490	J-62	TRUE	24.39	4.96	73	193.5	73	73
493	J-60	TRUE	24.14	4.96	73	193.53	73	73
496	J-59	TRUE	24.11	4.96	73	193.57	73	73
499	J-30	TRUE	21.81	4.96	74	193.53	74	74
502	J-15	TRUE	19.74	4.96	75	193.51	75	75
505	J-7	TRUE	18.27	0	76	193.5	76	76
508	J-8	TRUE	18.55	4.96	76	193.52	76	76
511	J-21	TRUE	20.02	4.96	75	193.54	75	75
514	J-32	TRUE	21.91	4.96	74	193.57	74	74
517	J-28	TRUE	21.5	4.96	74	193.5	74	74
520	J-13	TRUE	19.4	4.96	75	193.49	75	75
523	J-42	TRUE	22.36	4.96	74	193.47	74	74
526	J-24	TRUE	20.46	4.96	75	193.46	75	75
529	J-12	TRUE	19.17	0	75	193.46	75	75
532	J-74	TRUE	25.41	4.96	73	193.44	73	73
535	J-110	TRUE	28.33	0	71	193.42	71	71
538	J-43	TRUE	22.39	0	74	193.4	74	74
541	J-61	TRUE	24.19	4.96	73	193.4	73	73
544	J-72	TRUE	25.01	0	73	193.41	73	73
547	J-38	TRUE	22	4.96	74	193.39	74	74
550	J-39	TRUE	22	4.96	74	193.39	74	74

FF2 - Green St Intertie
active

Nodes highlighted
in red - FF failed

Existing Intertie at
Green St

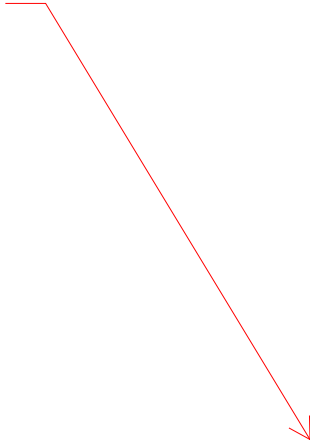

Future FF2 (Green St Intertie Active)

1008.71

Available FF

<= 1000	0
1000 - 1200	2
1200 - 1500	47
> 1500	24
total	73

0	1000	
1000	1200	
1200	1500	
1500	3500	

136	
63	(N/A)
71	Passed
2	Residual Pressure Failed

ID	Label	Is Active?	Elevation (ft)	Demand (gpm)	Pressure (psi)	Hydraulic Grade (ft)	Fire Flow (Available) (gpm)	Fire Flow Status	Pressure (Minimum) (psi)	Pressure (Maximum) (psi)
166	J-64	TRUE	25	0	74	196.07	(N/A)	(N/A)	74	74
167	J-79	TRUE	26	4.96	74	196.07	(N/A)	(N/A)	74	74
169	J-133	TRUE	33	0	70	195.3	1,682.72	Passed	70	70
171	J-80	TRUE	26	4.96	74	196.74	(N/A)	(N/A)	74	74
174	J-4	TRUE	18	4.96	76	193.5	(N/A)	(N/A)	76	76
176	J-65	TRUE	25	4.96	74	196.07	1,327.45	Passed	74	74
178	J-99	TRUE	28	0	73	195.58	(N/A)	(N/A)	73	73
181	J-100	TRUE	28	4.96	73	195.58	(N/A)	(N/A)	73	73
183	J-101	TRUE	28	4.96	73	195.8	(N/A)	(N/A)	73	73
185	J-113	TRUE	29	4.96	72	195.56	(N/A)	(N/A)	72	72
187	J-81	TRUE	26	4.96	73	195.75	(N/A)	(N/A)	73	73
191	J-137	TRUE	34	4.96	70	195.12	(N/A)	(N/A)	70	70
193	J-134	TRUE	33	4.96	70	195.3	(N/A)	(N/A)	70	70
197	J-130	TRUE	32	4.96	70	194.21	(N/A)	(N/A)	70	70
199	J-124	TRUE	31	4.96	71	193.97	(N/A)	(N/A)	71	71
201	J-131	TRUE	32	0	70	193.97	(N/A)	(N/A)	70	70
203	J-95	TRUE	27	4.96	72	193.98	(N/A)	(N/A)	72	72
205	J-102	TRUE	28	4.96	72	193.98	(N/A)	(N/A)	72	72
208	J-82	TRUE	26	4.96	73	193.86	(N/A)	(N/A)	73	73
210	J-66	TRUE	25	0	73	193.8	(N/A)	(N/A)	73	73
212	J-67	TRUE	25	4.96	73	193.66	(N/A)	(N/A)	73	73
214	J-33	TRUE	22	4.96	74	193.45	(N/A)	(N/A)	74	74
216	J-26	TRUE	21	4.96	75	193.63	(N/A)	(N/A)	75	75
218	J-17	TRUE	20	4.96	75	193.62	(N/A)	(N/A)	75	75
220	J-55	TRUE	24	4.96	73	193.62	(N/A)	(N/A)	73	73
224	J-18	TRUE	20	4.96	75	193.62	(N/A)	(N/A)	75	75
226	J-132	TRUE	32	4.96	70	193.56	(N/A)	(N/A)	70	70
228	J-47	TRUE	23	4.96	74	193.51	(N/A)	(N/A)	74	74
232	J-5	TRUE	18	4.96	76	193.51	(N/A)	(N/A)	76	76
234	J-83	TRUE	26	4.96	72	193.52	(N/A)	(N/A)	72	72
237	J-114	TRUE	29	4.96	71	193.65	(N/A)	(N/A)	71	71
239	J-125	TRUE	31	4.96	70	193.69	(N/A)	(N/A)	70	70
244	J-126	TRUE	31	0	70	193.55	(N/A)	(N/A)	70	70
246	J-118	TRUE	30	4.96	71	193.51	(N/A)	(N/A)	71	71
248	J-84	TRUE	26	4.96	72	193.53	(N/A)	(N/A)	72	72
250	J-103	TRUE	28	4.96	72	193.66	(N/A)	(N/A)	72	72
252	J-85	TRUE	26	4.96	72	193.56	(N/A)	(N/A)	72	72
254	J-86	TRUE	26	4.96	73	193.69	(N/A)	(N/A)	73	73
256	J-68	TRUE	25	4.96	73	193.59	(N/A)	(N/A)	73	73
262	J-69	TRUE	25	4.96	73	193.87	(N/A)	(N/A)	73	73
266	J-56	TRUE	24	4.96	73	193.66	(N/A)	(N/A)	73	73
268	J-48	TRUE	23	4.96	74	193.59	(N/A)	(N/A)	74	74

ID	Label	Is Active?	Elevation (ft)	Demand (gpm)	Pressure (psi)	Hydraulic Grade (ft)	Fire Flow (Available) (gpm)	Fire Flow Status	Pressure (Minimum) (psi)	Pressure (Maximum) (psi)
271	J-119	TRUE	30	4.96	71	193.44	(N/A)	(N/A)	71	71
273	J-70	TRUE	25	4.96	73	193.45	(N/A)	(N/A)	73	73
275	J-115	TRUE	29	4.96	71	193.42	(N/A)	(N/A)	71	71
278	J-9	TRUE	19	4.96	75	193.41	(N/A)	(N/A)	75	75
280	J-10	TRUE	19	4.96	75	193.41	(N/A)	(N/A)	75	75
283	J-27	TRUE	21	4.96	75	193.41	(N/A)	(N/A)	75	75
285	J-49	TRUE	23	4.96	74	193.41	(N/A)	(N/A)	74	74
287	J-19	TRUE	20	4.96	75	193.42	(N/A)	(N/A)	75	75
291	J-116	TRUE	29	0	71	193.41	(N/A)	(N/A)	71	71
293	J-104	TRUE	28	4.96	72	193.41	(N/A)	(N/A)	72	72
296	J-34	TRUE	22	4.96	74	193.4	(N/A)	(N/A)	74	74
298	J-105	TRUE	28	4.96	72	193.4	(N/A)	(N/A)	72	72
302	J-20	TRUE	20	4.96	75	193.43	(N/A)	(N/A)	75	75
304	J-11	TRUE	19	4.96	75	193.46	(N/A)	(N/A)	75	75
306	J-6	TRUE	18	4.96	76	193.49	(N/A)	(N/A)	76	76
308	J-57	TRUE	24	4.96	73	193.4	(N/A)	(N/A)	73	73
310	J-35	TRUE	22	4.96	74	193.4	(N/A)	(N/A)	74	74
312	J-36	TRUE	22	4.96	74	193.4	(N/A)	(N/A)	74	74
314	J-37	TRUE	22	4.96	74	193.39	(N/A)	(N/A)	74	74
316	J-106	TRUE	28	4.96	72	193.4	(N/A)	(N/A)	72	72
318	J-96	TRUE	27	4.96	72	193.4	(N/A)	(N/A)	72	72
320	J-50	TRUE	23	4.96	74	193.4	(N/A)	(N/A)	74	74
324	J-2	TRUE	17	4.96	76	193.51	(N/A)	(N/A)	76	76
342	J-98	TRUE	27.64	0	73	195.85	1,912.55	Passed	73	73
345	J-136	TRUE	33.62	0	70	195.15	1,905.13	Passed	70	70
348	J-58	TRUE	24	4.96	73	193.86	1,454.83	Passed	73	73
350	J-120	TRUE	30	0	71	193.98	1,413.09	Passed	71	71
352	J-87	TRUE	26	0	74	196.04	2,221.33	Passed	74	74
355	J-63	TRUE	24.78	0	73	193.82	1,525.39	Passed	73	73
358	J-90	TRUE	26.28	0	72	193.68	1,487.60	Passed	72	72
361	J-108	TRUE	28.28	0	72	193.66	1,480.87	Passed	72	72
364	J-123	TRUE	30.77	0	70	193.68	1,553.37	Passed	70	70
367	J-111	TRUE	28.45	0	71	193.65	1,475.85	Passed	71	71
370	J-75	TRUE	25.42	0	73	193.65	1,545.66	Passed	73	73
373	J-54	TRUE	23.93	0	73	193.62	1,551.93	Passed	73	73
376	J-25	TRUE	20.89	0	75	193.63	1,279.42	Passed	75	75
379	J-97	TRUE	27.22	4.96	72	193.59	1,337.78	Passed	72	72
382	J-78	TRUE	25.92	0	73	193.51	1,538.85	Passed	73	73
385	J-45	TRUE	22.92	0	74	193.51	1,541.30	Passed	74	74
388	J-122	TRUE	30.31	0	71	193.52	1,471.77	Passed	71	71
391	J-88	TRUE	26	0	72	193.56	1,503.53	Passed	72	72
394	J-3	TRUE	18	0	76	193.51	1,444.29	Passed	76	76
397	J-117	TRUE	29.87	0	71	193.44	1,458.50	Passed	71	71
400	J-22	TRUE	20.38	0	75	193.42	1,520.63	Passed	75	75
403	J-44	TRUE	22.54	0	74	193.4	1,433.88	Passed	74	74
406	J-107	TRUE	28	0	72	193.4	1,452.72	Passed	72	72
409	J-40	TRUE	22.08	0	74	193.39	1,211.79	Passed	74	74
412	J-46	TRUE	22.93	0	74	193.4	1,379.54	Passed	74	74
415	J-31	TRUE	21.85	0	74	193.41	1,456.01	Passed	74	74
418	J-112	TRUE	28.5	4.96	72	195.67	1,956.65	Passed	72	72
421	J-91	TRUE	26.3	0	73	196.03	1,934.82	Passed	73	73
424	J-109	TRUE	28.3	0	72	195.61	2,023.77	Passed	72	72

ID	Label	Is Active?	Elevation (ft)	Demand (gpm)	Pressure (psi)	Hydraulic Grade (ft)	Fire Flow (Available) (gpm)	Fire Flow Status	Pressure (Minimum) (psi)	Pressure (Maximum) (psi)
427	J-135	TRUE	33.38	0	70	195.23	1,784.04	Passed	70	70
430	J-127	TRUE	31.1	0	70	193.99	1,630.91	Passed	70	70
433	J-128	TRUE	31.55	0	70	194.19	1,696.71	Passed	70	70
436	J-93	TRUE	26.78	0	72	193.95	1,646.75	Passed	72	72
439	J-76	TRUE	25.61	0	74	195.62	1,872.77	Passed	74	74
442	J-23	TRUE	20.43	0	75	193.62	1,301.63	Passed	75	75
445	J-53	TRUE	23.92	0	73	193.66	1,443.96	Passed	73	73
448	J-51	TRUE	23.04	0	74	193.6	1,484.59	Passed	74	74
451	J-71	TRUE	25	0	73	193.66	1,444.60	Passed	73	73
454	J-89	TRUE	26	4.96	73	193.6	1,379.99	Passed	73	73
457	J-92	TRUE	26.47	4.96	72	193.55	1,380.63	Passed	72	72
460	J-129	TRUE	31.79	0	70	193.59	1,511.02	Passed	70	70
463	J-52	TRUE	23.34	4.96	74	193.54	1,526.24	Passed	74	74
466	J-14	TRUE	19.73	0	75	193.51	1,008.71	Residual Pressure Failed	75	75
469	J-73	TRUE	25.22	0	73	193.46	1,512.79	Passed	73	73
472	J-41	TRUE	22.26	0	74	193.46	1,528.17	Passed	74	74
475	J-16	TRUE	20	4.96	75	193.41	1,359.89	Passed	75	75
478	J-29	TRUE	21.54	4.96	74	193.41	1,476.48	Passed	74	74
481	J-94	TRUE	26.96	4.96	72	193.43	1,474.55	Passed	72	72
484	J-121	TRUE	30	0	71	193.5	1,463.96	Passed	71	71
487	J-77	TRUE	25.78	0	73	193.53	1,464.91	Passed	73	73
490	J-62	TRUE	24.39	4.96	73	193.5	1,268.67	Passed	73	73
493	J-60	TRUE	24.14	4.96	73	193.53	1,278.67	Passed	73	73
496	J-59	TRUE	24.11	4.96	73	193.57	1,353.70	Passed	73	73
499	J-30	TRUE	21.81	4.96	74	193.53	1,238.50	Passed	74	74
502	J-15	TRUE	19.74	4.96	75	193.51	1,286.74	Passed	75	75
505	J-7	TRUE	18.27	0	76	193.5	1,441.28	Passed	76	76
508	J-8	TRUE	18.55	4.96	76	193.52	1,428.75	Passed	76	76
511	J-21	TRUE	20.02	4.96	75	193.54	1,424.25	Passed	75	75
514	J-32	TRUE	21.91	4.96	74	193.57	1,449.97	Passed	74	74
517	J-28	TRUE	21.5	4.96	74	193.5	1,228.88	Passed	74	74
520	J-13	TRUE	19.4	4.96	75	193.49	1,315.20	Passed	75	75
523	J-42	TRUE	22.36	4.96	74	193.47	1,209.99	Passed	74	74
526	J-24	TRUE	20.46	4.96	75	193.46	1,279.54	Passed	75	75
529	J-12	TRUE	19.17	0	75	193.46	1,447.27	Passed	75	75
532	J-74	TRUE	25.41	4.96	73	193.44	1,428.47	Passed	73	73
535	J-110	TRUE	28.33	0	71	193.42	1,474.03	Passed	71	71
538	J-43	TRUE	22.39	0	74	193.4	1,472.93	Passed	74	74
541	J-61	TRUE	24.19	4.96	73	193.4	1,431.96	Passed	73	73
544	J-72	TRUE	25.01	0	73	193.41	1,463.16	Passed	73	73
547	J-38	TRUE	22	4.96	74	193.39	1,215.37	Passed	74	74
550	J-39	TRUE	22	4.96	74	193.39	1,165.64	Residual Pressure Failed	74	74

Future MDD3 (Both interties without Boosters)

total demand	411.68
Pressure	
<= 50	20
50 - 70	116
70 - 80	0
> 80	0
total	136

0	50
50	70
70	80
80	200

Minimum Pressure 49

ID	Label	Is Active?	Elevation (ft)	Demand (gpm)	Pressure (psi)	Hydraulic Grade (ft)	Pressure (Minimum) (psi)	Pressure (Maximum) (psi)
166	J-64	TRUE	25	0	54	148.97	54	54
167	J-79	TRUE	26	4.96	53	148.97	53	53
169	J-133	TRUE	33	0	50	148.25	50	50
171	J-80	TRUE	26	4.96	53	149.6	53	53
174	J-4	TRUE	18	4.96	56	146.62	56	56
176	J-65	TRUE	25	4.96	54	148.97	54	54
178	J-99	TRUE	28	0	52	148.51	52	52
181	J-100	TRUE	28	4.96	52	148.51	52	52
183	J-101	TRUE	28	4.96	52	148.72	52	52
185	J-113	TRUE	29	4.96	52	148.5	52	52
187	J-81	TRUE	26	4.96	53	148.67	53	53
191	J-137	TRUE	34	4.96	49	148.09	49	49
193	J-134	TRUE	33	4.96	50	148.25	50	50
197	J-130	TRUE	32	4.96	50	147.25	50	50
199	J-124	TRUE	31	4.96	50	147.02	50	50
201	J-131	TRUE	32	0	50	147.02	50	50
203	J-95	TRUE	27	4.96	52	147.04	52	52
205	J-102	TRUE	28	4.96	51	147.03	51	51
208	J-82	TRUE	26	4.96	52	146.92	52	52
210	J-66	TRUE	25	0	53	146.87	53	53
212	J-67	TRUE	25	4.96	53	146.73	53	53
214	J-33	TRUE	22	4.96	54	146.54	54	54
216	J-26	TRUE	21	4.96	54	146.71	54	54
218	J-17	TRUE	20	4.96	55	146.7	55	55
220	J-55	TRUE	24	4.96	53	146.7	53	53
224	J-18	TRUE	20	4.96	55	146.7	55	55
226	J-132	TRUE	32	4.96	50	146.65	50	50
228	J-47	TRUE	23	4.96	53	146.6	53	53
232	J-5	TRUE	18	4.96	56	146.6	56	56
234	J-83	TRUE	26	4.96	52	146.6	52	52
237	J-114	TRUE	29	4.96	51	146.73	51	51
239	J-125	TRUE	31	4.96	50	146.77	50	50

ID	Label	Is Active?	Elevation (ft)	Demand (gpm)	Pressure (psi)	Hydraulic Grade (ft)	Pressure (Minimum) (psi)	Pressure (Maximum) (psi)
244	J-126	TRUE	31	0	50	146.64	50	50
246	J-118	TRUE	30	4.96	50	146.61	50	50
248	J-84	TRUE	26	4.96	52	146.63	52	52
250	J-103	TRUE	28	4.96	51	146.75	51	51
252	J-85	TRUE	26	4.96	52	146.68	52	52
254	J-86	TRUE	26	4.96	52	146.79	52	52
256	J-68	TRUE	25	4.96	53	146.72	53	53
262	J-69	TRUE	25	4.96	53	146.97	53	53
266	J-56	TRUE	24	4.96	53	146.79	53	53
268	J-48	TRUE	23	4.96	54	146.73	54	54
271	J-119	TRUE	30	4.96	50	146.54	50	50
273	J-70	TRUE	25	4.96	53	146.54	53	53
275	J-115	TRUE	29	4.96	51	146.51	51	51
278	J-9	TRUE	19	4.96	55	146.51	55	55
280	J-10	TRUE	19	4.96	55	146.51	55	55
283	J-27	TRUE	21	4.96	54	146.5	54	54
285	J-49	TRUE	23	4.96	53	146.5	53	53
287	J-19	TRUE	20	4.96	55	146.51	55	55
291	J-116	TRUE	29	0	51	146.5	51	51
293	J-104	TRUE	28	4.96	51	146.5	51	51
296	J-34	TRUE	22	4.96	54	146.5	54	54
298	J-105	TRUE	28	4.96	51	146.5	51	51
302	J-20	TRUE	20	4.96	55	146.53	55	55
304	J-11	TRUE	19	4.96	55	146.57	55	55
306	J-6	TRUE	18	4.96	56	146.61	56	56
308	J-57	TRUE	24	4.96	53	146.5	53	53
310	J-35	TRUE	22	4.96	54	146.5	54	54
312	J-36	TRUE	22	4.96	54	146.5	54	54
314	J-37	TRUE	22	4.96	54	146.49	54	54
316	J-106	TRUE	28	4.96	51	146.5	51	51
318	J-96	TRUE	27	4.96	52	146.5	52	52
320	J-50	TRUE	23	4.96	53	146.5	53	53
324	J-2	TRUE	17	4.96	56	146.63	56	56
342	J-98	TRUE	27.64	0	52	148.77	52	52
345	J-136	TRUE	33.62	0	50	148.12	50	50
348	J-58	TRUE	24	4.96	53	146.92	53	53
350	J-120	TRUE	30	0	51	147.03	51	51
352	J-87	TRUE	26	0	53	148.95	53	53
355	J-63	TRUE	24.78	0	53	146.93	53	53
358	J-90	TRUE	26.28	0	52	146.78	52	52
361	J-108	TRUE	28.28	0	51	146.75	51	51

ID	Label	Is Active?	Elevation (ft)	Demand (gpm)	Pressure (psi)	Hydraulic Grade (ft)	Pressure (Minimum) (psi)	Pressure (Maximum) (psi)
364	J-123	TRUE	30.77	0	50	146.76	50	50
367	J-111	TRUE	28.45	0	51	146.73	51	51
370	J-75	TRUE	25.42	0	52	146.73	52	52
373	J-54	TRUE	23.93	0	53	146.7	53	53
376	J-25	TRUE	20.89	0	54	146.71	54	54
379	J-97	TRUE	27.22	4.96	52	146.69	52	52
382	J-78	TRUE	25.92	0	52	146.6	52	52
385	J-45	TRUE	22.92	0	54	146.6	54	54
388	J-122	TRUE	30.31	0	50	146.62	50	50
391	J-88	TRUE	26	0	52	146.67	52	52
394	J-3	TRUE	18	0	56	146.64	56	56
397	J-117	TRUE	29.87	0	50	146.54	50	50
400	J-22	TRUE	20.38	0	55	146.52	55	55
403	J-44	TRUE	22.54	0	54	146.5	54	54
406	J-107	TRUE	28	0	51	146.5	51	51
409	J-40	TRUE	22.08	0	54	146.49	54	54
412	J-46	TRUE	22.93	0	53	146.5	53	53
415	J-31	TRUE	21.85	0	54	146.5	54	54
418	J-112	TRUE	28.5	4.96	52	148.6	52	52
421	J-91	TRUE	26.3	0	53	148.93	53	53
424	J-109	TRUE	28.3	0	52	148.54	52	52
427	J-135	TRUE	33.38	0	50	148.19	50	50
430	J-127	TRUE	31.1	0	50	147.05	50	50
433	J-128	TRUE	31.55	0	50	147.23	50	50
436	J-93	TRUE	26.78	0	52	147.01	52	52
439	J-76	TRUE	25.61	0	53	148.58	53	53
442	J-23	TRUE	20.43	0	55	146.7	55	55
445	J-53	TRUE	23.92	0	53	146.79	53	53
448	J-51	TRUE	23.04	0	54	146.74	54	54
451	J-71	TRUE	25	0	53	146.78	53	53
454	J-89	TRUE	26	4.96	52	146.71	52	52
457	J-92	TRUE	26.47	4.96	52	146.65	52	52
460	J-129	TRUE	31.79	0	50	146.68	50	50
463	J-52	TRUE	23.34	4.96	53	146.63	53	53
466	J-14	TRUE	19.73	0	55	146.6	55	55
469	J-73	TRUE	25.22	0	52	146.56	52	52
472	J-41	TRUE	22.26	0	54	146.56	54	54
475	J-16	TRUE	20	4.96	55	146.5	55	55
478	J-29	TRUE	21.54	4.96	54	146.51	54	54
481	J-94	TRUE	26.96	4.96	52	146.52	52	52
484	J-121	TRUE	30	0	50	146.59	50	50

ID	Label	Is Active?	Elevation (ft)	Demand (gpm)	Pressure (psi)	Hydraulic Grade (ft)	Pressure (Minimum) (psi)	Pressure (Maximum) (psi)
487	J-77	TRUE	25.78	0	52	146.63	52	52
490	J-62	TRUE	24.39	4.96	53	146.6	53	53
493	J-60	TRUE	24.14	4.96	53	146.64	53	53
496	J-59	TRUE	24.11	4.96	53	146.7	53	53
499	J-30	TRUE	21.81	4.96	54	146.65	54	54
502	J-15	TRUE	19.74	4.96	55	146.63	55	55
505	J-7	TRUE	18.27	0	56	146.63	56	56
508	J-8	TRUE	18.55	4.96	55	146.65	55	55
511	J-21	TRUE	20.02	4.96	55	146.67	55	55
514	J-32	TRUE	21.91	4.96	54	146.71	54	54
517	J-28	TRUE	21.5	4.96	54	146.62	54	54
520	J-13	TRUE	19.4	4.96	55	146.61	55	55
523	J-42	TRUE	22.36	4.96	54	146.58	54	54
526	J-24	TRUE	20.46	4.96	55	146.57	55	55
529	J-12	TRUE	19.17	0	55	146.57	55	55
532	J-74	TRUE	25.41	4.96	52	146.54	52	52
535	J-110	TRUE	28.33	0	51	146.51	51	51
538	J-43	TRUE	22.39	0	54	146.5	54	54
541	J-61	TRUE	24.19	4.96	53	146.5	53	53
544	J-72	TRUE	25.01	0	53	146.5	53	53
547	J-38	TRUE	22	4.96	54	146.49	54	54
550	J-39	TRUE	22	4.96	54	146.49	54	54

FF3 - Both Interties
active without pumps

Nodes highlighted
in red - FF failed

Future FF3 (Both interties without Boosters)

955.74

Available FF	
<= 1000	1
1000 - 1200	2
1200 - 1500	9
> 1500	61
Total	73

0	1000
1000	1200
1200	1500
1500	3500

136	
63	(N/A)
70	Passed
3	Residual Pressure Failed

ID	Label	Is Active?	Elevation (ft)	Demand (gpm)	Pressure (psi)	Hydraulic Grade (ft)	Fire Flow (Available) (gpm)	Fire Flow Status	Pressure (Minimum) (psi)	Pressure (Maximum) (psi)
166	J-64	TRUE	25	0	54	148.97	(N/A)	(N/A)	54	54
167	J-79	TRUE	26	4.96	53	148.97	(N/A)	(N/A)	53	53
169	J-133	TRUE	33	0	50	148.25	1,764.91	Passed	50	50
171	J-80	TRUE	26	4.96	53	149.6	(N/A)	(N/A)	53	53
174	J-4	TRUE	18	4.96	56	146.62	(N/A)	(N/A)	56	56
176	J-65	TRUE	25	4.96	54	148.97	1,181.48	Residual Pressure Failed	54	54
178	J-99	TRUE	28	0	52	148.51	(N/A)	(N/A)	52	52
181	J-100	TRUE	28	4.96	52	148.51	(N/A)	(N/A)	52	52
183	J-101	TRUE	28	4.96	52	148.72	(N/A)	(N/A)	52	52
185	J-113	TRUE	29	4.96	52	148.5	(N/A)	(N/A)	52	52
187	J-81	TRUE	26	4.96	53	148.67	(N/A)	(N/A)	53	53
191	J-137	TRUE	34	4.96	49	148.09	(N/A)	(N/A)	49	49
193	J-134	TRUE	33	4.96	50	148.25	(N/A)	(N/A)	50	50
197	J-130	TRUE	32	4.96	50	147.25	(N/A)	(N/A)	50	50
199	J-124	TRUE	31	4.96	50	147.02	(N/A)	(N/A)	50	50
201	J-131	TRUE	32	0	50	147.02	(N/A)	(N/A)	50	50
203	J-95	TRUE	27	4.96	52	147.04	(N/A)	(N/A)	52	52
205	J-102	TRUE	28	4.96	51	147.03	(N/A)	(N/A)	51	51
208	J-82	TRUE	26	4.96	52	146.92	(N/A)	(N/A)	52	52
210	J-66	TRUE	25	0	53	146.87	(N/A)	(N/A)	53	53
212	J-67	TRUE	25	4.96	53	146.73	(N/A)	(N/A)	53	53
214	J-33	TRUE	22	4.96	54	146.54	(N/A)	(N/A)	54	54
216	J-26	TRUE	21	4.96	54	146.71	(N/A)	(N/A)	54	54
218	J-17	TRUE	20	4.96	55	146.7	(N/A)	(N/A)	55	55
220	J-55	TRUE	24	4.96	53	146.7	(N/A)	(N/A)	53	53
224	J-18	TRUE	20	4.96	55	146.7	(N/A)	(N/A)	55	55
226	J-132	TRUE	32	4.96	50	146.65	(N/A)	(N/A)	50	50
228	J-47	TRUE	23	4.96	53	146.6	(N/A)	(N/A)	53	53
232	J-5	TRUE	18	4.96	56	146.6	(N/A)	(N/A)	56	56
234	J-83	TRUE	26	4.96	52	146.6	(N/A)	(N/A)	52	52
237	J-114	TRUE	29	4.96	51	146.73	(N/A)	(N/A)	51	51
239	J-125	TRUE	31	4.96	50	146.77	(N/A)	(N/A)	50	50
244	J-126	TRUE	31	0	50	146.64	(N/A)	(N/A)	50	50
246	J-118	TRUE	30	4.96	50	146.61	(N/A)	(N/A)	50	50
248	J-84	TRUE	26	4.96	52	146.63	(N/A)	(N/A)	52	52
250	J-103	TRUE	28	4.96	51	146.75	(N/A)	(N/A)	51	51
252	J-85	TRUE	26	4.96	52	146.68	(N/A)	(N/A)	52	52
254	J-86	TRUE	26	4.96	52	146.79	(N/A)	(N/A)	52	52
256	J-68	TRUE	25	4.96	53	146.72	(N/A)	(N/A)	53	53
262	J-69	TRUE	25	4.96	53	146.97	(N/A)	(N/A)	53	53
266	J-56	TRUE	24	4.96	53	146.79	(N/A)	(N/A)	53	53

ID	Label	Is Active?	Elevation (ft)	Demand (gpm)	Pressure (psi)	Hydraulic Grade (ft)	Fire Flow (Available) (gpm)	Fire Flow Status	Pressure (Minimum) (psi)	Pressure (Maximum) (psi)
268	J-48	TRUE	23	4.96	54	146.73	(N/A)	(N/A)	54	54
271	J-119	TRUE	30	4.96	50	146.54	(N/A)	(N/A)	50	50
273	J-70	TRUE	25	4.96	53	146.54	(N/A)	(N/A)	53	53
275	J-115	TRUE	29	4.96	51	146.51	(N/A)	(N/A)	51	51
278	J-9	TRUE	19	4.96	55	146.51	(N/A)	(N/A)	55	55
280	J-10	TRUE	19	4.96	55	146.51	(N/A)	(N/A)	55	55
283	J-27	TRUE	21	4.96	54	146.5	(N/A)	(N/A)	54	54
285	J-49	TRUE	23	4.96	53	146.5	(N/A)	(N/A)	53	53
287	J-19	TRUE	20	4.96	55	146.51	(N/A)	(N/A)	55	55
291	J-116	TRUE	29	0	51	146.5	(N/A)	(N/A)	51	51
293	J-104	TRUE	28	4.96	51	146.5	(N/A)	(N/A)	51	51
296	J-34	TRUE	22	4.96	54	146.5	(N/A)	(N/A)	54	54
298	J-105	TRUE	28	4.96	51	146.5	(N/A)	(N/A)	51	51
302	J-20	TRUE	20	4.96	55	146.53	(N/A)	(N/A)	55	55
304	J-11	TRUE	19	4.96	55	146.57	(N/A)	(N/A)	55	55
306	J-6	TRUE	18	4.96	56	146.61	(N/A)	(N/A)	56	56
308	J-57	TRUE	24	4.96	53	146.5	(N/A)	(N/A)	53	53
310	J-35	TRUE	22	4.96	54	146.5	(N/A)	(N/A)	54	54
312	J-36	TRUE	22	4.96	54	146.5	(N/A)	(N/A)	54	54
314	J-37	TRUE	22	4.96	54	146.49	(N/A)	(N/A)	54	54
316	J-106	TRUE	28	4.96	51	146.5	(N/A)	(N/A)	51	51
318	J-96	TRUE	27	4.96	52	146.5	(N/A)	(N/A)	52	52
320	J-50	TRUE	23	4.96	53	146.5	(N/A)	(N/A)	53	53
324	J-2	TRUE	17	4.96	56	146.63	(N/A)	(N/A)	56	56
342	J-98	TRUE	27.64	0	52	148.77	2,036.08	Passed	52	52
345	J-136	TRUE	33.62	0	50	148.12	2,376.27	Passed	50	50
348	J-58	TRUE	24	4.96	53	146.92	1,639.90	Passed	53	53
350	J-120	TRUE	30	0	51	147.03	1,548.44	Passed	51	51
352	J-87	TRUE	26	0	53	148.95	2,713.47	Passed	53	53
355	J-63	TRUE	24.78	0	53	146.93	2,529.05	Passed	53	53
358	J-90	TRUE	26.28	0	52	146.78	2,106.66	Passed	52	52
361	J-108	TRUE	28.28	0	51	146.75	1,979.78	Passed	51	51
364	J-123	TRUE	30.77	0	50	146.76	2,054.16	Passed	50	50
367	J-111	TRUE	28.45	0	51	146.73	1,791.43	Passed	51	51
370	J-75	TRUE	25.42	0	52	146.73	1,931.04	Passed	52	52
373	J-54	TRUE	23.93	0	53	146.7	1,950.52	Passed	53	53
376	J-25	TRUE	20.89	0	54	146.71	1,335.27	Passed	54	54
379	J-97	TRUE	27.22	4.96	52	146.69	1,576.56	Passed	52	52
382	J-78	TRUE	25.92	0	52	146.6	2,023.44	Passed	52	52
385	J-45	TRUE	22.92	0	54	146.6	1,984.66	Passed	54	54
388	J-122	TRUE	30.31	0	50	146.62	1,918.62	Passed	50	50
391	J-88	TRUE	26	0	52	146.67	2,281.61	Passed	52	52
394	J-3	TRUE	18	0	56	146.64	2,215.34	Passed	56	56
397	J-117	TRUE	29.87	0	50	146.54	1,884.93	Passed	50	50
400	J-22	TRUE	20.38	0	55	146.52	1,951.26	Passed	55	55
403	J-44	TRUE	22.54	0	54	146.5	1,738.67	Passed	54	54
406	J-107	TRUE	28	0	51	146.5	1,829.69	Passed	51	51
409	J-40	TRUE	22.08	0	54	146.49	1,271.78	Passed	54	54
412	J-46	TRUE	22.93	0	53	146.5	1,612.86	Passed	53	53
415	J-31	TRUE	21.85	0	54	146.5	1,813.90	Passed	54	54
418	J-112	TRUE	28.5	4.96	52	148.6	2,189.34	Passed	52	52
421	J-91	TRUE	26.3	0	53	148.93	2,032.13	Passed	53	53
424	J-109	TRUE	28.3	0	52	148.54	2,411.14	Passed	52	52

ID	Label	Is Active?	Elevation (ft)	Demand (gpm)	Pressure (psi)	Hydraulic Grade (ft)	Fire Flow (Available) (gpm)	Fire Flow Status	Pressure (Minimum) (psi)	Pressure (Maximum) (psi)
427	J-135	TRUE	33.38	0	50	148.19	1,990.82	Passed	50	50
430	J-127	TRUE	31.1	0	50	147.05	2,120.31	Passed	50	50
433	J-128	TRUE	31.55	0	50	147.23	2,239.85	Passed	50	50
436	J-93	TRUE	26.78	0	52	147.01	2,127.65	Passed	52	52
439	J-76	TRUE	25.61	0	53	148.58	2,249.65	Passed	53	53
442	J-23	TRUE	20.43	0	55	146.7	1,373.93	Passed	55	55
445	J-53	TRUE	23.92	0	53	146.79	2,642.65	Passed	53	53
448	J-51	TRUE	23.04	0	54	146.74	3,499.99	Passed	54	54
451	J-71	TRUE	25	0	53	146.78	2,170.70	Passed	53	53
454	J-89	TRUE	26	4.96	52	146.71	1,775.17	Passed	52	52
457	J-92	TRUE	26.47	4.96	52	146.65	1,693.31	Passed	52	52
460	J-129	TRUE	31.79	0	50	146.68	1,978.78	Passed	50	50
463	J-52	TRUE	23.34	4.96	53	146.63	1,911.65	Passed	53	53
466	J-14	TRUE	19.73	0	55	146.6	955.74	Residual Pressure Failed	55	55
469	J-73	TRUE	25.22	0	52	146.56	1,952.73	Passed	52	52
472	J-41	TRUE	22.26	0	54	146.56	1,968.06	Passed	54	54
475	J-16	TRUE	20	4.96	55	146.5	1,545.04	Passed	55	55
478	J-29	TRUE	21.54	4.96	54	146.51	1,837.52	Passed	54	54
481	J-94	TRUE	26.96	4.96	52	146.52	1,868.46	Passed	52	52
484	J-121	TRUE	30	0	50	146.59	1,908.96	Passed	50	50
487	J-77	TRUE	25.78	0	52	146.63	1,971.19	Passed	52	52
490	J-62	TRUE	24.39	4.96	53	146.6	1,432.54	Passed	53	53
493	J-60	TRUE	24.14	4.96	53	146.64	1,531.14	Passed	53	53
496	J-59	TRUE	24.11	4.96	53	146.7	1,856.05	Passed	53	53
499	J-30	TRUE	21.81	4.96	54	146.65	1,492.18	Passed	54	54
502	J-15	TRUE	19.74	4.96	55	146.63	1,605.12	Passed	55	55
505	J-7	TRUE	18.27	0	56	146.63	2,113.13	Passed	56	56
508	J-8	TRUE	18.55	4.96	55	146.65	2,219.03	Passed	55	55
511	J-21	TRUE	20.02	4.96	55	146.67	2,323.93	Passed	55	55
514	J-32	TRUE	21.91	4.96	54	146.71	2,842.85	Passed	54	54
517	J-28	TRUE	21.5	4.96	54	146.62	1,417.23	Passed	54	54
520	J-13	TRUE	19.4	4.96	55	146.61	1,631.13	Passed	55	55
523	J-42	TRUE	22.36	4.96	54	146.58	1,315.86	Passed	54	54
526	J-24	TRUE	20.46	4.96	55	146.57	1,461.01	Passed	55	55
529	J-12	TRUE	19.17	0	55	146.57	1,913.39	Passed	55	55
532	J-74	TRUE	25.41	4.96	52	146.54	1,775.99	Passed	52	52
535	J-110	TRUE	28.33	0	51	146.51	1,897.03	Passed	51	51
538	J-43	TRUE	22.39	0	54	146.5	1,854.26	Passed	54	54
541	J-61	TRUE	24.19	4.96	53	146.5	1,752.53	Passed	53	53
544	J-72	TRUE	25.01	0	53	146.5	1,841.98	Passed	53	53
547	J-38	TRUE	22	4.96	54	146.49	1,276.54	Passed	54	54
550	J-39	TRUE	22	4.96	54	146.49	1,193.65	Residual Pressure Failed	54	54

Future MDD4 (Both interties with Boosters)

total demand	411.68
Pressure	
<= 50	0
50 - 70	0
70 - 80	136
> 80	0
	136

0	50	
50	70	
70	80	
80	200	
Minimum Pressure		71
Maximum Pressure		78

ID	Label	Is Active?	Elevation (ft)	Demand (gpm)	Pressure (psi)	Hydraulic Grade (ft)	Pressure (Minimum) (psi)	Pressure (Maximum) (psi)
324	J-2	TRUE	17	4.96	78	196.81	78	78
394	J-3	TRUE	18	0	77	196.82	77	77
174	J-4	TRUE	18	4.96	77	196.76	77	77
306	J-6	TRUE	18	4.96	77	196.7	77	77
505	J-7	TRUE	18.27	0	77	196.76	77	77
232	J-5	TRUE	18	4.96	77	196.43	77	77
508	J-8	TRUE	18.55	4.96	77	196.87	77	77
304	J-11	TRUE	19	4.96	77	196.55	77	77
280	J-10	TRUE	19	4.96	77	196.38	77	77
278	J-9	TRUE	19	4.96	77	196.38	77	77
529	J-12	TRUE	19.17	0	77	196.55	77	77
520	J-13	TRUE	19.4	4.96	77	196.7	77	77
502	J-15	TRUE	19.74	4.96	77	196.78	77	77
511	J-21	TRUE	20.02	4.96	77	196.93	77	77
466	J-14	TRUE	19.73	0	76	196.43	76	76
218	J-17	TRUE	20	4.96	76	196.49	76	76
224	J-18	TRUE	20	4.96	76	196.49	76	76
302	J-20	TRUE	20	4.96	76	196.44	76	76
287	J-19	TRUE	20	4.96	76	196.38	76	76
475	J-16	TRUE	20	4.96	76	196.38	76	76
526	J-24	TRUE	20.46	4.96	76	196.55	76	76
442	J-23	TRUE	20.43	0	76	196.49	76	76
400	J-22	TRUE	20.38	0	76	196.39	76	76
376	J-25	TRUE	20.89	0	76	196.49	76	76
216	J-26	TRUE	21	4.96	76	196.49	76	76
283	J-27	TRUE	21	4.96	76	196.38	76	76
517	J-28	TRUE	21.5	4.96	76	196.7	76	76
514	J-32	TRUE	21.91	4.96	76	197.03	76	76
499	J-30	TRUE	21.81	4.96	76	196.81	76	76
478	J-29	TRUE	21.54	4.96	76	196.38	76	76
415	J-31	TRUE	21.85	0	76	196.39	76	76
214	J-33	TRUE	22	4.96	75	196.4	75	75
312	J-36	TRUE	22	4.96	75	196.38	75	75
310	J-35	TRUE	22	4.96	75	196.38	75	75
296	J-34	TRUE	22	4.96	75	196.37	75	75
314	J-37	TRUE	22	4.96	75	196.37	75	75
547	J-38	TRUE	22	4.96	75	196.37	75	75

ID	Label	Is Active?	Elevation (ft)	Demand (gpm)	Pressure (psi)	Hydraulic Grade (ft)	Pressure (Minimum) (psi)	Pressure (Maximum) (psi)
550	J-39	TRUE	22	4.96	75	196.37	75	75
409	J-40	TRUE	22.08	0	75	196.37	75	75
523	J-42	TRUE	22.36	4.96	75	196.55	75	75
472	J-41	TRUE	22.26	0	75	196.41	75	75
268	J-48	TRUE	23	4.96	75	197.1	75	75
448	J-51	TRUE	23.04	0	75	197.11	75	75
538	J-43	TRUE	22.39	0	75	196.38	75	75
403	J-44	TRUE	22.54	0	75	196.37	75	75
385	J-45	TRUE	22.92	0	75	196.43	75	75
412	J-46	TRUE	22.93	0	75	196.38	75	75
228	J-47	TRUE	23	4.96	75	196.44	75	75
285	J-49	TRUE	23	4.96	75	196.38	75	75
320	J-50	TRUE	23	4.96	75	196.37	75	75
445	J-53	TRUE	23.92	0	75	197.09	75	75
463	J-52	TRUE	23.34	4.96	75	196.45	75	75
266	J-56	TRUE	24	4.96	75	197.09	75	75
496	J-59	TRUE	24.11	4.96	75	196.87	75	75
348	J-58	TRUE	24	4.96	75	196.6	75	75
493	J-60	TRUE	24.14	4.96	75	196.71	75	75
166	J-64	TRUE	25	0	75	197.57	75	75
176	J-65	TRUE	25	4.96	75	197.57	75	75
373	J-54	TRUE	23.93	0	75	196.49	75	75
220	J-55	TRUE	24	4.96	75	196.49	75	75
308	J-57	TRUE	24	4.96	75	196.38	75	75
355	J-63	TRUE	24.78	0	75	197.06	75	75
541	J-61	TRUE	24.19	4.96	74	196.38	74	74
490	J-62	TRUE	24.39	4.96	74	196.56	74	74
262	J-69	TRUE	25	4.96	74	197.05	74	74
439	J-76	TRUE	25.61	0	74	197.58	74	74
451	J-71	TRUE	25	0	74	196.94	74	74
171	J-80	TRUE	26	4.96	74	197.92	74	74
256	J-68	TRUE	25	4.96	74	196.9	74	74
352	J-87	TRUE	26	0	74	197.58	74	74
167	J-79	TRUE	26	4.96	74	197.57	74	74
210	J-66	TRUE	25	0	74	196.57	74	74
212	J-67	TRUE	25	4.96	74	196.51	74	74
187	J-81	TRUE	26	4.96	74	197.43	74	74
273	J-70	TRUE	25	4.96	74	196.4	74	74
544	J-72	TRUE	25.01	0	74	196.38	74	74
421	J-91	TRUE	26.3	0	74	197.55	74	74
469	J-73	TRUE	25.22	0	74	196.41	74	74
370	J-75	TRUE	25.42	0	74	196.51	74	74
532	J-74	TRUE	25.41	4.96	74	196.44	74	74
487	J-77	TRUE	25.78	0	74	196.58	74	74
254	J-86	TRUE	26	4.96	74	196.77	74	74
454	J-89	TRUE	26	4.96	74	196.74	74	74

ID	Label	Is Active?	Elevation (ft)	Demand (gpm)	Pressure (psi)	Hydraulic Grade (ft)	Pressure (Minimum) (psi)	Pressure (Maximum) (psi)
252	J-85	TRUE	26	4.96	74	196.73	74	74
391	J-88	TRUE	26	0	74	196.71	74	74
208	J-82	TRUE	26	4.96	74	196.6	74	74
248	J-84	TRUE	26	4.96	74	196.58	74	74
382	J-78	TRUE	25.92	0	74	196.44	74	74
358	J-90	TRUE	26.28	0	74	196.75	74	74
234	J-83	TRUE	26	4.96	74	196.45	74	74
457	J-92	TRUE	26.47	4.96	74	196.58	74	74
436	J-93	TRUE	26.78	0	73	196.64	73	73
342	J-98	TRUE	27.64	0	73	197.47	73	73
203	J-95	TRUE	27	4.96	73	196.66	73	73
183	J-101	TRUE	28	4.96	73	197.44	73	73
481	J-94	TRUE	26.96	4.96	73	196.4	73	73
318	J-96	TRUE	27	4.96	73	196.38	73	73
379	J-97	TRUE	27.22	4.96	73	196.59	73	73
178	J-99	TRUE	28	0	73	197.34	73	73
181	J-100	TRUE	28	4.96	73	197.34	73	73
424	J-109	TRUE	28.3	0	73	197.36	73	73
418	J-112	TRUE	28.5	4.96	73	197.38	73	73
205	J-102	TRUE	28	4.96	73	196.66	73	73
250	J-103	TRUE	28	4.96	73	196.62	73	73
293	J-104	TRUE	28	4.96	73	196.38	73	73
316	J-106	TRUE	28	4.96	73	196.38	73	73
406	J-107	TRUE	28	0	73	196.38	73	73
298	J-105	TRUE	28	4.96	73	196.38	73	73
185	J-113	TRUE	29	4.96	73	197.34	73	73
361	J-108	TRUE	28.28	0	73	196.61	73	73
535	J-110	TRUE	28.33	0	73	196.39	73	73
367	J-111	TRUE	28.45	0	73	196.51	73	73
237	J-114	TRUE	29	4.96	72	196.51	72	72
275	J-115	TRUE	29	4.96	72	196.39	72	72
291	J-116	TRUE	29	0	72	196.38	72	72
350	J-120	TRUE	30	0	72	196.66	72	72
397	J-117	TRUE	29.87	0	72	196.43	72	72
246	J-118	TRUE	30	4.96	72	196.51	72	72
484	J-121	TRUE	30	0	72	196.49	72	72
271	J-119	TRUE	30	4.96	72	196.44	72	72
388	J-122	TRUE	30.31	0	72	196.51	72	72
364	J-123	TRUE	30.77	0	72	196.57	72	72
199	J-124	TRUE	31	4.96	72	196.66	72	72
239	J-125	TRUE	31	4.96	72	196.58	72	72
430	J-127	TRUE	31.1	0	72	196.67	72	72
244	J-126	TRUE	31	0	72	196.51	72	72
433	J-128	TRUE	31.55	0	71	196.75	71	71
197	J-130	TRUE	32	4.96	71	196.75	71	71
460	J-129	TRUE	31.79	0	71	196.52	71	71

ID	Label	Is Active?	Elevation (ft)	Demand (gpm)	Pressure (psi)	Hydraulic Grade (ft)	Pressure (Minimum) (psi)	Pressure (Maximum) (psi)
201	J-131	TRUE	32	0	71	196.66	71	71
226	J-132	TRUE	32	4.96	71	196.51	71	71
169	J-133	TRUE	33	0	71	197.22	71	71
193	J-134	TRUE	33	4.96	71	197.22	71	71
427	J-135	TRUE	33.38	0	71	197.19	71	71
345	J-136	TRUE	33.62	0	71	197.16	71	71
191	J-137	TRUE	34	4.96	71	197.14	71	71

FF4 - Both interties active with pumps

Nodes highlighted in red - FF failed

Proposed Intertie at Holland St

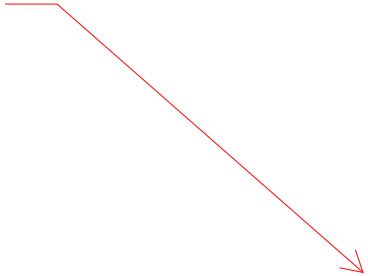

Existing Intertie at Green St

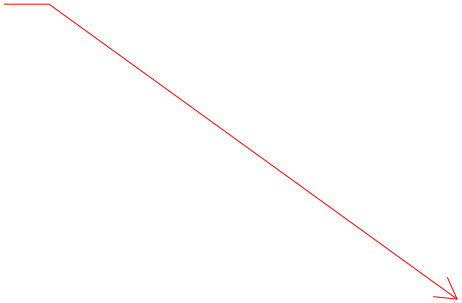

Future FF4 (Both interties with Boosters)

Available FF	1230.19
<= 1000	0
1000 - 1200	0
1200 - 1500	1
> 1500	72

0	1000
1000	1200
1200	1500
1500	3500

136	
63	(N/A)
73	Passed
	Residual Pressure
0	Failed

ID	Label	Is Active?	Elevation (ft)	Demand (gpm)	Pressure (psi)	Hydraulic Grade (ft)	Fire Flow (Needed) (gpm)	Fire Flow (Available) (gpm)	Fire Flow Status	Pressure (Minimum) (psi)	Pressure (Maximum) (psi)
324	J-2	TRUE	17	4.96	78	196.81	0.00	(N/A)	(N/A)	78	78
394	J-3	TRUE	18	0	77	196.82	0.00	2,715.30	Passed	77	77
174	J-4	TRUE	18	4.96	77	196.76	0.00	(N/A)	(N/A)	77	77
306	J-6	TRUE	18	4.96	77	196.7	0.00	(N/A)	(N/A)	77	77
505	J-7	TRUE	18.27	0	77	196.76	0.00	2,608.82	Passed	77	77
232	J-5	TRUE	18	4.96	77	196.43	0.00	(N/A)	(N/A)	77	77
508	J-8	TRUE	18.55	4.96	77	196.87	0.00	2,718.05	Passed	77	77
304	J-11	TRUE	19	4.96	77	196.55	0.00	(N/A)	(N/A)	77	77
280	J-10	TRUE	19	4.96	77	196.38	0.00	(N/A)	(N/A)	77	77
278	J-9	TRUE	19	4.96	77	196.38	0.00	(N/A)	(N/A)	77	77
529	J-12	TRUE	19.17	0	77	196.55	0.00	2,398.46	Passed	77	77
520	J-13	TRUE	19.4	4.96	77	196.7	0.00	2,057.70	Passed	77	77
502	J-15	TRUE	19.74	4.96	77	196.78	0.00	2,024.37	Passed	77	77
511	J-21	TRUE	20.02	4.96	77	196.93	0.00	2,836.99	Passed	77	77
466	J-14	TRUE	19.73	0	76	196.43	0.00	1,230.19	Passed	76	76
218	J-17	TRUE	20	4.96	76	196.49	0.00	(N/A)	(N/A)	76	76
224	J-18	TRUE	20	4.96	76	196.49	0.00	(N/A)	(N/A)	76	76
302	J-20	TRUE	20	4.96	76	196.44	0.00	(N/A)	(N/A)	76	76
287	J-19	TRUE	20	4.96	76	196.38	0.00	(N/A)	(N/A)	76	76
475	J-16	TRUE	20	4.96	76	196.38	0.00	1,970.18	Passed	76	76
526	J-24	TRUE	20.46	4.96	76	196.55	0.00	1,862.07	Passed	76	76
442	J-23	TRUE	20.43	0	76	196.49	0.00	1,756.78	Passed	76	76
400	J-22	TRUE	20.38	0	76	196.39	0.00	2,461.09	Passed	76	76
376	J-25	TRUE	20.89	0	76	196.49	0.00	1,710.56	Passed	76	76
216	J-26	TRUE	21	4.96	76	196.49	0.00	(N/A)	(N/A)	76	76
283	J-27	TRUE	21	4.96	76	196.38	0.00	(N/A)	(N/A)	76	76
517	J-28	TRUE	21.5	4.96	76	196.7	0.00	1,808.53	Passed	76	76
514	J-32	TRUE	21.91	4.96	76	197.03	0.00	3,383.04	Passed	76	76
499	J-30	TRUE	21.81	4.96	76	196.81	0.00	1,897.56	Passed	76	76
478	J-29	TRUE	21.54	4.96	76	196.38	0.00	2,332.82	Passed	76	76
415	J-31	TRUE	21.85	0	76	196.39	0.00	2,305.26	Passed	76	76
214	J-33	TRUE	22	4.96	75	196.4	0.00	(N/A)	(N/A)	75	75
312	J-36	TRUE	22	4.96	75	196.38	0.00	(N/A)	(N/A)	75	75
310	J-35	TRUE	22	4.96	75	196.38	0.00	(N/A)	(N/A)	75	75
296	J-34	TRUE	22	4.96	75	196.37	0.00	(N/A)	(N/A)	75	75
314	J-37	TRUE	22	4.96	75	196.37	0.00	(N/A)	(N/A)	75	75
547	J-38	TRUE	22	4.96	75	196.37	0.00	1,646.48	Passed	75	75
550	J-39	TRUE	22	4.96	75	196.37	0.00	1,542.69	Passed	75	75
409	J-40	TRUE	22.08	0	75	196.37	0.00	1,640.86	Passed	75	75
523	J-42	TRUE	22.36	4.96	75	196.55	0.00	1,691.35	Passed	75	75
472	J-41	TRUE	22.26	0	75	196.41	0.00	2,490.00	Passed	75	75
268	J-48	TRUE	23	4.96	75	197.1	0.00	(N/A)	(N/A)	75	75
448	J-51	TRUE	23.04	0	75	197.11	0.00	3,499.99	Passed	75	75
538	J-43	TRUE	22.39	0	75	196.38	0.00	2,357.88	Passed	75	75
403	J-44	TRUE	22.54	0	75	196.37	0.00	2,219.98	Passed	75	75
385	J-45	TRUE	22.92	0	75	196.43	0.00	2,512.11	Passed	75	75

ID	Label	Is Active?	Elevation (ft)	Demand (gpm)	Pressure (psi)	Hydraulic Grade (ft)	Fire Flow (Needed) (gpm)	Fire Flow (Available) (gpm)	Fire Flow Status	Pressure (Minimum) (psi)	Pressure (Maximum) (psi)
412	J-46	TRUE	22.93	0	75	196.38	0.00	2,068.84	Passed	75	75
228	J-47	TRUE	23	4.96	75	196.44	0.00	(N/A)	(N/A)	75	75
285	J-49	TRUE	23	4.96	75	196.38	0.00	(N/A)	(N/A)	75	75
320	J-50	TRUE	23	4.96	75	196.37	0.00	(N/A)	(N/A)	75	75
445	J-53	TRUE	23.92	0	75	197.09	0.00	3,189.58	Passed	75	75
463	J-52	TRUE	23.34	4.96	75	196.45	0.00	2,426.83	Passed	75	75
266	J-56	TRUE	24	4.96	75	197.09	0.00	(N/A)	(N/A)	75	75
496	J-59	TRUE	24.11	4.96	75	196.87	0.00	2,342.07	Passed	75	75
348	J-58	TRUE	24	4.96	75	196.6	0.00	2,097.85	Passed	75	75
493	J-60	TRUE	24.14	4.96	75	196.71	0.00	1,960.38	Passed	75	75
166	J-64	TRUE	25	0	75	197.57	0.00	(N/A)	(N/A)	75	75
176	J-65	TRUE	25	4.96	75	197.57	0.00	1,515.16	Passed	75	75
373	J-54	TRUE	23.93	0	75	196.49	0.00	2,475.21	Passed	75	75
220	J-55	TRUE	24	4.96	75	196.49	0.00	(N/A)	(N/A)	75	75
308	J-57	TRUE	24	4.96	75	196.38	0.00	(N/A)	(N/A)	75	75
355	J-63	TRUE	24.78	0	75	197.06	0.00	3,100.04	Passed	75	75
541	J-61	TRUE	24.19	4.96	74	196.38	0.00	2,245.95	Passed	74	74
490	J-62	TRUE	24.39	4.96	74	196.56	0.00	1,845.49	Passed	74	74
262	J-69	TRUE	25	4.96	74	197.05	0.00	(N/A)	(N/A)	74	74
439	J-76	TRUE	25.61	0	74	197.58	0.00	2,783.58	Passed	74	74
451	J-71	TRUE	25	0	74	196.94	0.00	2,709.31	Passed	74	74
171	J-80	TRUE	26	4.96	74	197.92	0.00	(N/A)	(N/A)	74	74
256	J-68	TRUE	25	4.96	74	196.9	0.00	(N/A)	(N/A)	74	74
352	J-87	TRUE	26	0	74	197.58	0.00	3,276.58	Passed	74	74
167	J-79	TRUE	26	4.96	74	197.57	0.00	(N/A)	(N/A)	74	74
210	J-66	TRUE	25	0	74	196.57	0.00	(N/A)	(N/A)	74	74
212	J-67	TRUE	25	4.96	74	196.51	0.00	(N/A)	(N/A)	74	74
187	J-81	TRUE	26	4.96	74	197.43	0.00	(N/A)	(N/A)	74	74
273	J-70	TRUE	25	4.96	74	196.4	0.00	(N/A)	(N/A)	74	74
544	J-72	TRUE	25.01	0	74	196.38	0.00	2,358.71	Passed	74	74
421	J-91	TRUE	26.3	0	74	197.55	0.00	2,532.90	Passed	74	74
469	J-73	TRUE	25.22	0	74	196.41	0.00	2,490.00	Passed	74	74
370	J-75	TRUE	25.42	0	74	196.51	0.00	2,460.10	Passed	74	74
532	J-74	TRUE	25.41	4.96	74	196.44	0.00	2,277.54	Passed	74	74
487	J-77	TRUE	25.78	0	74	196.58	0.00	2,505.06	Passed	74	74
254	J-86	TRUE	26	4.96	74	196.77	0.00	(N/A)	(N/A)	74	74
454	J-89	TRUE	26	4.96	74	196.74	0.00	2,264.91	Passed	74	74
252	J-85	TRUE	26	4.96	74	196.73	0.00	(N/A)	(N/A)	74	74
391	J-88	TRUE	26	0	74	196.71	0.00	2,855.65	Passed	74	74
208	J-82	TRUE	26	4.96	74	196.6	0.00	(N/A)	(N/A)	74	74
248	J-84	TRUE	26	4.96	74	196.58	0.00	(N/A)	(N/A)	74	74
382	J-78	TRUE	25.92	0	74	196.44	0.00	2,576.43	Passed	74	74
358	J-90	TRUE	26.28	0	74	196.75	0.00	2,656.40	Passed	74	74
234	J-83	TRUE	26	4.96	74	196.45	0.00	(N/A)	(N/A)	74	74
457	J-92	TRUE	26.47	4.96	74	196.58	0.00	2,175.77	Passed	74	74
436	J-93	TRUE	26.78	0	73	196.64	0.00	2,693.99	Passed	73	73
342	J-98	TRUE	27.64	0	73	197.47	0.00	2,551.54	Passed	73	73
203	J-95	TRUE	27	4.96	73	196.66	0.00	(N/A)	(N/A)	73	73
183	J-101	TRUE	28	4.96	73	197.44	0.00	(N/A)	(N/A)	73	73
481	J-94	TRUE	26.96	4.96	73	196.4	0.00	2,401.88	Passed	73	73
318	J-96	TRUE	27	4.96	73	196.38	0.00	(N/A)	(N/A)	73	73
379	J-97	TRUE	27.22	4.96	73	196.59	0.00	2,036.47	Passed	73	73
178	J-99	TRUE	28	0	73	197.34	0.00	(N/A)	(N/A)	73	73
181	J-100	TRUE	28	4.96	73	197.34	0.00	(N/A)	(N/A)	73	73
424	J-109	TRUE	28.3	0	73	197.36	0.00	2,988.91	Passed	73	73
418	J-112	TRUE	28.5	4.96	73	197.38	0.00	2,737.36	Passed	73	73
205	J-102	TRUE	28	4.96	73	196.66	0.00	(N/A)	(N/A)	73	73
250	J-103	TRUE	28	4.96	73	196.62	0.00	(N/A)	(N/A)	73	73

ID	Label	Is Active?	Elevation (ft)	Demand (gpm)	Pressure (psi)	Hydraulic Grade (ft)	Fire Flow (Needed) (gpm)	Fire Flow (Available) (gpm)	Fire Flow Status	Pressure (Minimum) (psi)	Pressure (Maximum) (psi)
293	J-104	TRUE	28	4.96	73	196.38	0.00	(N/A)	(N/A)	73	73
316	J-106	TRUE	28	4.96	73	196.38	0.00	(N/A)	(N/A)	73	73
406	J-107	TRUE	28	0	73	196.38	0.00	2,363.96	Passed	73	73
298	J-105	TRUE	28	4.96	73	196.38	0.00	(N/A)	(N/A)	73	73
185	J-113	TRUE	29	4.96	73	197.34	0.00	(N/A)	(N/A)	73	73
361	J-108	TRUE	28.28	0	73	196.61	0.00	2,528.59	Passed	73	73
535	J-110	TRUE	28.33	0	73	196.39	0.00	2,446.55	Passed	73	73
367	J-111	TRUE	28.45	0	73	196.51	0.00	2,311.12	Passed	73	73
237	J-114	TRUE	29	4.96	72	196.51	0.00	(N/A)	(N/A)	72	72
275	J-115	TRUE	29	4.96	72	196.39	0.00	(N/A)	(N/A)	72	72
291	J-116	TRUE	29	0	72	196.38	0.00	(N/A)	(N/A)	72	72
350	J-120	TRUE	30	0	72	196.66	0.00	2,015.94	Passed	72	72
397	J-117	TRUE	29.87	0	72	196.43	0.00	2,438.89	Passed	72	72
246	J-118	TRUE	30	4.96	72	196.51	0.00	(N/A)	(N/A)	72	72
484	J-121	TRUE	30	0	72	196.49	0.00	2,465.00	Passed	72	72
271	J-119	TRUE	30	4.96	72	196.44	0.00	(N/A)	(N/A)	72	72
388	J-122	TRUE	30.31	0	72	196.51	0.00	2,477.71	Passed	72	72
364	J-123	TRUE	30.77	0	72	196.57	0.00	2,639.85	Passed	72	72
199	J-124	TRUE	31	4.96	72	196.66	0.00	(N/A)	(N/A)	72	72
239	J-125	TRUE	31	4.96	72	196.58	0.00	(N/A)	(N/A)	72	72
430	J-127	TRUE	31.1	0	72	196.67	0.00	2,714.26	Passed	72	72
244	J-126	TRUE	31	0	72	196.51	0.00	(N/A)	(N/A)	72	72
433	J-128	TRUE	31.55	0	71	196.75	0.00	2,851.36	Passed	71	71
197	J-130	TRUE	32	4.96	71	196.75	0.00	(N/A)	(N/A)	71	71
460	J-129	TRUE	31.79	0	71	196.52	0.00	2,560.08	Passed	71	71
201	J-131	TRUE	32	0	71	196.66	0.00	(N/A)	(N/A)	71	71
226	J-132	TRUE	32	4.96	71	196.51	0.00	(N/A)	(N/A)	71	71
169	J-133	TRUE	33	0	71	197.22	0.00	2,279.55	Passed	71	71
193	J-134	TRUE	33	4.96	71	197.22	0.00	(N/A)	(N/A)	71	71
427	J-135	TRUE	33.38	0	71	197.19	0.00	2,551.47	Passed	71	71
345	J-136	TRUE	33.62	0	71	197.16	0.00	2,997.21	Passed	71	71
191	J-137	TRUE	34	4.96	71	197.14	0.00	(N/A)	(N/A)	71	71

Appendix C PROBABLE OPINION OF COST FOR ALTERNATIVES 2A AND 2B (OPTION 1)– POCS WITH PUMPS

Stantec

ENGINEERS OPINION OF CONSTRUCTION COST

Alternative 2A and 2B *(Option 1)- POC*/Intertie *with Booster Pump*

Project: PALO ALTO PARK FEASIBILITY STUDY
Location : CITY OF EAST PALO ALTO AND MENLO PARK

Date: 6/7/2026
Checked: 6/7/2026

By: J. DORIO
BY: C. POYTRESS

ITEM NO.		UNIT	APPROX. QUANTITY	UNIT PRICE	AMMOUNT	ASSUMPTION REFERENCE	NOTES
1	MOBILIZATION & DEMOBILIZATION	LS	2	$ 5,000	$10,000	Assumed Allocation	
2	HYDROSTATIC TESTING & DISINFECTION	LS	2	$ 2,000	$4,000	Assumed Allocation	
3	EROSION CONTROL	LS	2	$ 2,000	$4,000	Assumed Allocation	
4	CONSTRUCTION WATER SUPPLY	DAYS	21	$ 200	$4,200	Assumed Allocation	
5	DEMO EXISTING FACILITIES	LS	1	$ 17,000	$17,000	Stantec Market Research	
6	TRENCH EXCAVATION, BACKFILL, AND COMPACTION	LF	50	$ 448	$22,400	Stantec Market Research	
7	FURNISH AND INSTALL METER & VAULT	LS	2	$ 16,700	$33,400	Stantec Market Research	
8	FURNISH AND INSTALL VALVE VAULT	LS	2	$ 11,500	$23,000	Stantec Market Research	
9	FURNISH AND INSTALL 6" GATE VALVE	EA	6	$ 2,661	$16,000	Stantec Market Research	
10	FURNISH AND INSTALL 6" PIPE (AWWA C151)	LF	60	$ 188	$11,300	Stantec Market Research	
11	FURNISH AND INSTALL BOLLARDS	EA	8	$ 285	$2,300	Stantec Market Research	
12	ROAD REPAIR	LF	60	$ 153	$9,200	Stantec Market Research	
13	FURNISH AND INSTALL BOOSTER PUMP	LS	2	$ 100,000.00	$200,000	Stantec Market Research	
14	PUMP BUILDING AND CONCRETE SLAB	LS	2	$ 55,000.00	$110,000	Stantec Market Research	
15	ELECTRICAL SERVICE & METER	LS	2	$ 25,000.00	$50,000	Stantec Market Research	
16	INSTRUMENTATION & CONTROL	LS	2	$ 15,000.00	$30,000	Stantec Market Research	
17	TRAILER MOUNTED EMERGENCY STANDBY GENERATOR	LS	2	$ -	$0	Stantec Market Research	

OPINION OF PROBABLE CONSTRUCTION COST: $356,800

NOTES		
1		All costs reported above are present value.
2		The expected accuracy range for this opinion of probable constrcution cost is -10% to +25% in accordance with AACE Class 4 standards.

Appendix D PROBABLE OPINION OF COST FOR ALTERNATIVES 2A AND 2B (OPTION 2) – PIPELINE TO TANK

Stantec

ENGINEERS OPINION OF CONSTRUCTION COST
Alternative 2A and 2B *(Option 2)- Pipeline to Tank*

Project: PALO ALTO PARK FEASIBILITY STUDY
Location : CITY OF EAST PALO ALTO

Date: 6/7/2026
Checked: 6/7/2026

By: J. DORIO
BY: C. POYTRESS

ITEM NO.		UNIT	APPROX. QUANTITY	UNIT PRICE	AMMOUNT	ASSUMPTION REFERENCE	NOTES
1	MOBILIZATION & DEMOBILIZATION	LS	2	$ 5,000	$10,000	Assumed Allocation	
2	HYDROSTATIC TESTING & DISINFECTION	LS	2	$ 2,000	$4,000	Assumed Allocation	
3	EROSION CONTROL	LS	2	$ 2,000	$4,000	Assumed Allocation	
4	CONSTRUCTION WATER SUPPLY	DAYS	21	$ 200	$4,200	Assumed Allocation	
5	DEMO EXISTING FACILITIES	LS	1	$ 17,000	$17,000	Stantec Market Research	
6	TRENCH EXCAVATION, BACKFILL, AND COMPACTION	LF	1,200	$ 214	$256,800	Stantec Market Research	
7	FURNISH AND INSTALL METER & VAULT	LS	2	$ 16,700	$33,400	Stantec Market Research	
8	FURNISH AND INSTALL VALVE VAULT	LS	2	$ 11,500	$23,000	Stantec Market Research	
9	FURNISH AND INSTALL 8" GATE VALVE	EA	6	$ 2,661	$16,000	Stantec Market Research	
10	FURNISH AND INSTALL 8" PIPE (AWWA C151)	LF	1,200	$ 171	$205,000	Stantec Market Research	
11	FURNISH AND INSTALL BOLLARDS	EA	8	$ 285	$2,300	Stantec Market Research	
12	ROAD REPAIR	LF	1,200	$ 112	$134,400	Stantec Market Research	

OPINION OF PROBABLE CONSTRUCTION COST: $710,100

NOTES		
1		All costs reported above are present value.
2		The expected accuracy range for this opinion of probable constrcution cost is -10% to +25% in accordance with AACE Class 4 standards.

Appendix E ALTERNATIVE 1 – FINANCIAL ANALYSIS FOR WELL #7

Schedule 1 – Assumptions

Schedule 2 – Budgeted and Projected Cash Inflows

Schedule 3 - Budgeted and Projected Cash Outflows

Schedule 4 – Capital Improvement Plan

Schedule 5 – Debt Repayment Projections

Schedule 6 – Funding Summary

Schedule 7 – Cash Flow Pro Forma

Assumptions

Schedule 1

	FY 2026	FY 2027	FY 2028	FY 2029	FY 2030	FY 2031	FY 2032	FY 2033	FY 2034	FY 2035	FY 2036
Rate Increase Adoption Date	7/1/2025	7/1/2026	7/1/2027	7/1/2028	7/1/2029	7/1/2030	7/1/2031	7/1/2032	7/1/2033	7/1/2034	7/1/2035
Annual Growth											
Water											
Ending # of ACCTS	692	692	692	692	692	692	692	692	692	692	692
Capital Spending											
Annual Capital Budget (Future Year Dollars)	$ -	$ -	$ 2,071,330	$ -	$ -	$ -	$ -	$ -	$ -	$ -	$ -
Annual Percent Executed	100%	100%	100%	100%	100%	100%	100%	100%	100%	100%	100%
Operating Budget Reserve											
Target (Number of Months of Reserve)[1]	3	3	3	3	3	3	3	3	3	3	3
Operating Budget Execution Percentage[2]											
Personal Services	100%	100%	100%	100%	100%	100%	100%	100%	100%	100%	100%
Fixed Operations and Maintenance	100%	100%	100%	100%	100%	100%	100%	100%	100%	100%	100%
Variable Operations and Maintenance	100%	100%	100%	100%	100%	100%	100%	100%	100%	100%	100%

[1]Revenue Fund Operating Budget Reserve balance target assumes Restricted Reserves are not included.

[2]Execution percentages are applied to operating budget categories based on historical actuals compared to budgets.

Projection of Cash Inflows

Schedule 2

		FY 2026	FY 2027	FY 2028	FY 2029	FY 2030	FY 2031	FY 2032	FY 2033	FY 2034	FY 2035	FY 2036
	Assumed Rate Revenue Increases											
1	Assumed Water Rate Increase	0.00%	0.00%	20.00%	2.50%	2.50%	2.50%	2.50%	2.50%	2.50%	2.50%	2.50%
	Water Rate Revenue											
2	Usage Rate Revenue	$ 932,700	$ 932,700	$ 1,119,240	$ 1,147,221	$ 1,175,902	$ 1,205,299	$ 1,235,432	$ 1,266,317	$ 1,297,975	$ 1,330,425	$ 1,363,685
3	**Total Water Rate Revenue**	**$ 932,700**	**$ 932,700**	**$ 1,119,240**	**$ 1,147,221**	**$ 1,175,902**	**$ 1,205,299**	**$ 1,235,432**	**$ 1,266,317**	**$ 1,297,975**	**$ 1,330,425**	**$ 1,363,685**
	Other Operating Revenue											
4	Uncollected Revenue	$ -	$ (13,991)	$ (16,789)	$ (17,208)	$ (17,639)	$ (18,079)	$ (18,531)	$ (18,995)	$ (19,470)	$ (19,956)	$ (20,455)
5	**Total Other Operating Revenue**	**$ -**	**$ (13,991)**	**$ (16,789)**	**$ (17,208)**	**$ (17,639)**	**$ (18,079)**	**$ (18,531)**	**$ (18,995)**	**$ (19,470)**	**$ (19,956)**	**$ (20,455)**
	Non-Operating Revenue											
6	Fire	$ 1,020	$ 1,020	$ 1,020	$ 1,020	$ 1,020	$ 1,020	$ 1,020	$ 1,020	$ 1,020	$ 1,020	$ 1,020
7	Impact Fees	2,500	2,500	2,500	2,500	2,500	2,500	2,500	2,500	2,500	2,500	2,500
8	Customer Late Charges	25,649	25,649	25,649	25,649	25,649	25,649	25,649	25,649	25,649	25,649	25,649
9	Other Service Fees	2,000	2,000	2,000	2,000	2,000	2,000	2,000	2,000	2,000	2,000	2,000
10	Other Income	1,000	1,000	1,000	1,000	1,000	1,000	1,000	1,000	1,000	1,000	1,000
11	**Total Non-Operating Revenue**	**$ 32,169**	**$ 32,169**	**$ 32,169**	**$ 32,169**	**$ 32,169**	**$ 32,169**	**$ 32,169**	**$ 32,169**	**$ 32,169**	**$ 32,169**	**$ 32,169**
	Interest Income											
12	Unrestricted	$ 35,000	$ 35,000	$ 35,000	$ 35,000	$ 35,000	$ 35,000	$ 35,000	$ 35,000	$ 35,000	$ 35,000	$ 35,000
13	**Total Interest Income**	**$ 35,000**	**$ 35,000**	**$ 35,000**	**$ 35,000**	**$ 35,000**	**$ 35,000**	**$ 35,000**	**$ 35,000**	**$ 35,000**	**$ 35,000**	**$ 35,000**
14	**Total Cash Inflows**	**$ 999,869**	**$ 985,879**	**$ 1,169,620**	**$ 1,197,182**	**$ 1,225,432**	**$ 1,254,389**	**$ 1,284,069**	**$ 1,314,492**	**$ 1,345,675**	**$ 1,377,637**	**$ 1,410,399**

Projection of Cash Outflows

Schedule 3

		Escalation Factor	FY 2026	FY 2027	FY 2028	FY 2029	FY 2030	FY 2031	FY 2032	FY 2033	FY 2034	FY 2035	FY 2036
	Personal Services												
1	Salaries	Salaries & Wages	$ 364,274	$ 375,202	$ 386,458	$ 398,052	$ 409,994	$ 422,293	$ 434,962	$ 448,011	$ 461,451	$ 475,295	$ 489,554
2	Payroll Taxes	Default Inflation Factor	29,142	29,871	30,617	31,383	32,167	32,971	33,796	34,641	35,507	36,394	37,304
3	Medical Benefits	Employee Benefits	12,000	12,240	12,485	12,734	12,989	13,249	13,514	13,784	14,060	14,341	14,628
4	Worker's Comp.	Default Inflation Factor	21,856	22,402	22,962	23,537	24,125	24,728	25,346	25,980	26,629	27,295	27,978
5	**Total Personal Services**		**$ 427,272**	**$ 439,715**	**$ 452,523**	**$ 465,706**	**$ 479,275**	**$ 493,242**	**$ 507,618**	**$ 522,416**	**$ 537,647**	**$ 553,326**	**$ 569,463**
	Fixed O&M												
6	Infrastructure Repairs	Repair & Maintenance	$ 40,000	$ 40,800	$ 41,616	$ 42,448	$ 43,297	$ 44,163	$ 45,046	$ 45,947	$ 46,866	$ 47,804	$ 48,760
7	Maintenance Supplies	Default Inflation Factor	10,000	10,250	10,506	10,769	11,038	11,314	11,597	11,887	12,184	12,489	12,801
8	Water Samples & Reporting	Default Inflation Factor	16,000	16,400	16,810	17,230	17,661	18,103	18,555	19,019	19,494	19,982	20,481
9	Chloronation	Default Inflation Factor	10,000	10,250	10,506	10,769	11,038	11,314	11,597	11,887	12,184	12,489	12,801
10	Engineer & Professional Services	Default Inflation Factor	32,000	32,800	33,620	34,461	35,322	36,205	37,110	38,038	38,989	39,964	40,963
11	Office & General Supplies	Default Inflation Factor	7,000	7,175	7,354	7,538	7,727	7,920	8,118	8,321	8,529	8,742	8,961
12	Telephone System	Default Inflation Factor	22,700	23,268	23,849	24,445	25,057	25,683	26,325	26,983	27,658	28,349	29,058
13	Postage	Default Inflation Factor	12,000	12,300	12,608	12,923	13,246	13,577	13,916	14,264	14,621	14,986	15,361
14	Service Fees	Default Inflation Factor	5,600	5,740	5,884	6,031	6,181	6,336	6,494	6,657	6,823	6,994	7,168
15	Printing	Default Inflation Factor	500	513	525	538	552	566	580	594	609	624	640
16	Alarm System	Default Inflation Factor	1,600	1,640	1,681	1,723	1,766	1,810	1,856	1,902	1,949	1,998	2,048
17	Information Technology	Default Inflation Factor	5,600	5,740	5,884	6,031	6,181	6,336	6,494	6,657	6,823	6,994	7,168
18	Annual Meeting Expense	Default Inflation Factor	4,200	4,305	4,413	4,523	4,636	4,752	4,871	4,992	5,117	5,245	5,376
19	Conferences & Meetings	Default Inflation Factor	12,000	12,300	12,608	12,923	13,246	13,577	13,916	14,264	14,621	14,986	15,361
20	Professional Training & Certification	Default Inflation Factor	500	513	525	538	552	566	580	594	609	624	640
21	Insurance	Default Inflation Factor	16,000	16,400	16,810	17,230	17,661	18,103	18,555	19,019	19,494	19,982	20,481
22	Auto & Travel	Default Inflation Factor	3,500	3,588	3,677	3,769	3,863	3,960	4,059	4,160	4,264	4,371	4,480
23	Website Maintenance	Default Inflation Factor	3,500	3,588	3,677	3,769	3,863	3,960	4,059	4,160	4,264	4,371	4,480
24	Property Taxes	Default Inflation Factor	2,000	2,050	2,101	2,154	2,208	2,263	2,319	2,377	2,437	2,498	2,560
25	Taxes/License/Professional Dues	Default Inflation Factor	8,000	8,200	8,405	8,615	8,831	9,051	9,278	9,509	9,747	9,991	10,241
26	Professional Services	Default Inflation Factor	8,000	8,200	8,405	8,615	8,831	9,051	9,278	9,509	9,747	9,991	10,241
27	Legal	Default Inflation Factor	125,000	128,125	131,328	134,611	137,977	141,426	144,962	148,586	152,300	156,108	160,011
28	Accounting & Review	Default Inflation Factor	18,000	18,450	18,911	19,384	19,869	20,365	20,874	21,396	21,931	22,480	23,042
29	Grounds & Bldg Maintenance	Default Inflation Factor	10,000	10,250	10,506	10,769	11,038	11,314	11,597	11,887	12,184	12,489	12,801
30	Staff Appreciation	Default Inflation Factor	300	308	315	323	331	339	348	357	366	375	384
31	Annual O&M for Treatment and New Well	Default Inflation Factor	-	-	43,000	44,075	45,177	46,306	47,464	48,651	49,867	51,113	52,391
32	**Total Fixed O&M**		**$ 374,000**	**$ 383,150**	**$ 435,525**	**$ 446,205**	**$ 457,148**	**$ 468,360**	**$ 479,848**	**$ 491,619**	**$ 503,680**	**$ 516,037**	**$ 528,699**
	Variable O&M												
33	PG&E	Fuel, Utilities, Chemicals	$ 85,000	$ 90,100	$ 95,506	$ 101,236	$ 104,273	$ 107,402	$ 110,624	$ 113,942	$ 117,361	$ 120,882	$ 124,508

Projection of Cash Outflows **Schedule 3**

		Escalation Factor	FY 2026	FY 2027	FY 2028	FY 2029	FY 2030	FY 2031	FY 2032	FY 2033	FY 2034	FY 2035	FY 2036
34	**Total Variable O&M**		**$ 85,000**	**$ 90,100**	**$ 95,506**	**$ 101,236**	**$ 104,273**	**$ 107,402**	**$ 110,624**	**$ 113,942**	**$ 117,361**	**$ 120,882**	**$ 124,508**
	Total Expenses by Category												
35	Personal Services		$ 427,272	$ 439,715	$ 452,523	$ 465,706	$ 479,275	$ 493,242	$ 507,618	$ 522,416	$ 537,647	$ 553,326	$ 569,463
36	Fixed Operations & Maintenance		374,000	383,150	435,525	446,205	457,148	468,360	479,848	491,619	503,680	516,037	528,699
37	Variable Operations & Maintenance		85,000	90,100	95,506	101,236	104,273	107,402	110,624	113,942	117,361	120,882	124,508
38	**Total Expenses**		$ 886,272	$ 912,965	$ 983,554	$ 1,013,147	$ 1,040,696	$ 1,069,003	$ 1,098,090	$ 1,127,977	$ 1,158,688	$ 1,190,245	$ 1,222,671
	Expense Execustion Factors												
39	Personal Services		100%	100%	100%	100%	100%	100%	100%	100%	100%	100%	100%
40	Fixed Operations & Maintenance		100%	100%	100%	100%	100%	100%	100%	100%	100%	100%	100%
41	Variable Operations & Maintenance		100%	100%	100%	100%	100%	100%	100%	100%	100%	100%	100%
	Total Expenses at Execution												
42	Personal Services		$ 427,272	$ 439,715	$ 452,523	$ 465,706	$ 479,275	$ 493,242	$ 507,618	$ 522,416	$ 537,647	$ 553,326	$ 569,463
43	Fixed Operations & Maintenance		374,000	383,150	435,525	446,205	457,148	468,360	479,848	491,619	503,680	516,037	528,699
44	Variable Operations & Maintenance		85,000	90,100	95,506	101,236	104,273	107,402	110,624	113,942	117,361	120,882	124,508
45	**Total Expenses at Execution**		**$ 886,272**	**$ 912,965**	**$ 983,554**	**$ 1,013,147**	**$ 1,040,696**	**$ 1,069,003**	**$ 1,098,090**	**$ 1,127,977**	**$ 1,158,688**	**$ 1,190,245**	**$ 1,222,671**
	Transfers Out												
46	Capital Reserve		$ -	$ -	$ 10,000	$ 10,000	$ 10,000	$ 10,000	$ 10,000	$ 10,000	$ 10,000	$ 10,000	$ 10,000
47	**Total Transfers Out**		**$ -**	**$ -**	**$ 10,000**	**$ 10,000**	**$ 10,000**	**$ 10,000**	**$ 10,000**	**$ 10,000**	**$ 10,000**	**$ 10,000**	**$ 10,000**
	Debt Service												
48	Existing Debt		$ 80,568	$ 80,568	$ 80,568	$ 80,568	$ 80,568	$ 80,568	$ 80,568	$ 80,568	$ 80,568	$ 80,568	$ 80,568
49	New Debt		-	-	61,239	61,239	61,239	61,239	61,239	61,239	61,239	61,239	61,239
50	**Total Debt Service**		**$ 80,568**	**$ 80,568**	**$ 141,807**	**$ 141,807**	**$ 141,807**	**$ 141,807**	**$ 141,807**	**$ 141,807**	**$ 141,807**	**$ 141,807**	**$ 141,807**
51	**Total Cash Outflows**		**$ 966,840**	**$ 993,533**	**$ 1,135,361**	**$ 1,164,954**	**$ 1,192,503**	**$ 1,220,811**	**$ 1,249,897**	**$ 1,279,785**	**$ 1,310,495**	**$ 1,342,052**	**$ 1,374,478**

Capital Improvement Program **Schedule 4**

		FY 2026	FY 2027	FY 2028	FY 2029	FY 2030	FY 2031	FY 2032	FY 2033	FY 2034	FY 2035	FY 2036
1	Well #7	$ -	$ -	$ 2,011,000	$ -	$ -	$ -	$ -	$ -	$ -	$ -	$ -
2	**Total CIP Budget (in current dollars)**	**$ -**	**$ -**	**$ 2,011,000**	**$ -**	**$ -**	**$ -**	**$ -**	**$ -**	**$ -**	**$ -**	**$ -**
3	Cumulative Projected Cost Escalation[1]	0.0%	0.0%	3.0%	6.1%	9.3%	12.6%	15.9%	19.4%	23.0%	26.7%	30.5%
4	**Resulting CIP Funding Level**	**$ -**	**$ -**	**$ 2,071,330**	**$ -**	**$ -**	**$ -**	**$ -**	**$ -**	**$ -**	**$ -**	**$ -**
5	Annual CIP Execution Percentage	100%	100%	100%	100%	100%	100%	100%	100%	100%	100%	100%
6	**Final CIP Funding Level**	**$ -**	**$ -**	**$ 2,071,330**	**$ -**	**$ -**	**$ -**	**$ -**	**$ -**	**$ -**	**$ -**	**$ -**

[1] CIP Escalation factors are consistent with the Engineering News Record Construction Cost Index.

Debt Repayment Projections

Schedule 5

	FY 2026	FY 2027	FY 2028	FY 2029	FY 2030	FY 2031	FY 2032	FY 2033	FY 2034	FY 2035	FY 2036
Prior Loans											
SBA Loan	$ 80,568	$ 80,568	$ 80,568	$ 80,568	$ 80,568	$ 80,568	$ 80,568	$ 80,568	$ 80,568	$ 80,568	$ 80,568
New Debt	$ -	$ -	$ 61,239	$ 61,239	$ 61,239	$ 61,239	$ 61,239	$ 61,239	$ 61,239	$ 61,239	$ 61,239
Total Loan Repayment	**$ 80,568**	**$ 80,568**	**$ 141,807**	**$ 141,807**	**$ 141,807**	**$ 141,807**	**$ 141,807**	**$ 141,807**	**$ 141,807**	**$ 141,807**	**$ 141,807**

Funding Summary by Fund

Schedule 6

	FY 2026	FY 2027	FY 2028	FY 2029	FY 2030	FY 2031	FY 2032	FY 2033	FY 2034	FY 2035	FY 2036
Capital Reserve Fund											
Balance At Beginning Of Fiscal Year	$ -	$ -	$ 1,200,000	$ -	$ 10,000	$ 20,000	$ 30,000	$ 40,000	$ 50,000	$ 60,000	$ 70,000
Annual Revenues	-	1,200,000	10,000	10,000	10,000	10,000	10,000	10,000	10,000	10,000	10,000
Less: Annual Expenses	-	-	-	-	-	-	-	-	-	-	-
Less: Payment Of Debt Service	-	-	-	-	-	-	-	-	-	-	-
Subtotal	$ -	$ 1,200,000	$ 1,210,000	$ 10,000	$ 20,000	$ 30,000	$ 40,000	$ 50,000	$ 60,000	$ 70,000	$ 80,000
Less: Restricted Funds	-	-	-	-	-	-	-	-	-	-	-
Total Amount Available For Projects	$ -	$ 1,200,000	$ 1,210,000	$ 10,000	$ 20,000	$ 30,000	$ 40,000	$ 50,000	$ 60,000	$ 70,000	$ 80,000
Amount Paid For Projects	-	-	(1,210,000)	-	-	-	-	-	-	-	-
Subtotal	$ -	$ 1,200,000	$ -	$ 10,000	$ 20,000	$ 30,000	$ 40,000	$ 50,000	$ 60,000	$ 70,000	$ 80,000
Add Back: Restricted Funds	-	-	-	-	-	-	-	-	-	-	-
Plus: Interest Earnings	-	1,500	3,000	38	150	313	438	563	688	813	938
Less: Interest Allocated To Cash Flow	-	(1,500)	(3,000)	(38)	(150)	(313)	(438)	(563)	(688)	(813)	(938)
Balance At End Of Fiscal Year	**$ -**	**$ 1,200,000**	**$ -**	**$ 10,000**	**$ 20,000**	**$ 30,000**	**$ 40,000**	**$ 50,000**	**$ 60,000**	**$ 70,000**	**$ 80,000**
Revenue Fund											
Balance At Beginning Of Fiscal Year	$ 413,631	$ 446,660	$ 439,005	$ 473,265	$ 505,492	$ 538,421	$ 571,999	$ 606,171	$ 640,878	$ 676,057	$ 711,643
Net Cash Flow	33,029	(7,655)	34,260	32,228	32,929	33,578	34,172	34,707	35,180	35,586	35,921
Less: Cash-Funded Capital Projects	-	-	-	-	-	-	-	-	-	-	-
Less: Payment Of Loan	-	-	-	-	-	-	-	-	-	-	-
Subtotal	$ 446,660	$ 439,005	$ 473,265	$ 505,492	$ 538,421	$ 571,999	$ 606,171	$ 640,878	$ 676,057	$ 711,643	$ 747,564
Less: Restricted Funds	(221,568)	(228,241)	(245,888)	(253,287)	(260,174)	(267,251)	(274,522)	(281,994)	(289,672)	(297,561)	(305,668)
Total Amount Available For Projects	225,092	210,764	227,376	252,206	278,247	304,748	331,648	358,883	386,385	414,082	441,896
Amount Paid For Projects	-	-	-	-	-	-	-	-	-	-	-
Subtotal	$ 225,092	$ 210,764	$ 227,376	$ 252,206	$ 278,247	$ 304,748	$ 331,648	$ 358,883	$ 386,385	$ 414,082	$ 441,896
Add Back: Restricted Funds	221,568	228,241	245,888	253,287	260,174	267,251	274,522	281,994	289,672	297,561	305,668
Plus: Interest Earnings	1,075	1,107	2,281	3,670	5,220	6,940	7,364	7,794	8,231	8,673	9,120
Less: Interest Allocated To Cash Flow	(1,075)	(1,107)	(2,281)	(3,670)	(5,220)	(6,940)	(7,364)	(7,794)	(8,231)	(8,673)	(9,120)
Balance At End Of Fiscal Year	**$ 446,660**	**$ 439,005**	**$ 473,265**	**$ 505,492**	**$ 538,421**	**$ 571,999**	**$ 606,171**	**$ 640,878**	**$ 676,057**	**$ 711,643**	**$ 747,564**

Pro Forma **Schedule 7**

		FY 2026	FY 2027	FY 2028	FY 2029	FY 2030	FY 2031	FY 2032	FY 2033	FY 2034	FY 2035	FY 2036
	Operating Revenue											
1	Water Rate Revenue	$ 932,700	$ 932,700	$ 932,700	$ 1,119,240	$ 1,147,221	$ 1,175,902	$ 1,205,299	$ 1,235,432	$ 1,266,317	$ 1,297,975	$ 1,330,425
2	Subtotal	$ 932,700	$ 932,700	$ 932,700	$ 1,119,240	$ 1,147,221	$ 1,175,902	$ 1,205,299	$ 1,235,432	$ 1,266,317	$ 1,297,975	$ 1,330,425
3	*Weighted Average Rate Increase*	*0.00%*	*0.00%*	*20.00%*	*2.50%*	*2.50%*	*2.50%*	*2.50%*	*2.50%*	*2.50%*	*2.50%*	*2.50%*
4	Additional Rate Revenue From Rate Increase	-	-	186,540	27,981	28,681	29,398	30,132	30,886	31,658	32,449	33,261
5	Total Rate Revenue	$ 932,700	$ 932,700	$ 1,119,240	$ 1,147,221	$ 1,175,902	$ 1,205,299	$ 1,235,432	$ 1,266,317	$ 1,297,975	$ 1,330,425	$ 1,363,685
6	Plus: Other Operating Revenue	-	(13,991)	(16,789)	(17,208)	(17,639)	(18,079)	(18,531)	(18,995)	(19,470)	(19,956)	(20,455)
7	**Equals: Total Operating Revenue**	**$ 932,700**	**$ 918,710**	**$ 1,102,451**	**$ 1,130,013**	**$ 1,158,263**	**$ 1,187,220**	**$ 1,216,900**	**$ 1,247,323**	**$ 1,278,506**	**$ 1,310,468**	**$ 1,343,230**
	Less: Operating Expenses											
8	Personal Services	$ (427,272)	$ (439,715)	$ (452,523)	$ (465,706)	$ (479,275)	$ (493,242)	$ (507,618)	$ (522,416)	$ (537,647)	$ (553,326)	$ (569,463)
9	Variable Operations & Maintenance Costs	(85,000)	(90,100)	(95,506)	(101,236)	(104,273)	(107,402)	(110,624)	(113,942)	(117,361)	(120,882)	(124,508)
10	Operations & Maintenance Costs	(374,000)	(383,150)	(435,525)	(446,205)	(457,148)	(468,360)	(479,848)	(491,619)	(503,680)	(516,037)	(528,699)
11	**Equals: Net Operating Income**	**$ 46,428**	**$ 5,744**	**$ 118,898**	**$ 116,866**	**$ 117,567**	**$ 118,216**	**$ 118,810**	**$ 119,345**	**$ 119,818**	**$ 120,224**	**$ 120,559**
	Plus: Non-Operating Income/(Expense)											
12	Non-Operating Revenue	$ 32,169	$ 32,169	$ 32,169	$ 32,169	$ 32,169	$ 32,169	$ 32,169	$ 32,169	$ 32,169	$ 32,169	$ 32,169
13	Interest Income	35,000	35,000	35,000	35,000	35,000	35,000	35,000	35,000	35,000	35,000	35,000
14	**Equals: Net Income**	**$ 113,597**	**$ 72,913**	**$ 186,067**	**$ 184,035**	**$ 184,736**	**$ 185,385**	**$ 185,979**	**$ 186,514**	**$ 186,987**	**$ 187,393**	**$ 187,728**
	Less: Revenues Excluded From Coverage Test											
15	**Equals: Net Income Available For Debt Service**	**$ 113,597**	**$ 72,913**	**$ 186,067**	**$ 184,035**	**$ 184,736**	**$ 185,385**	**$ 185,979**	**$ 186,514**	**$ 186,987**	**$ 187,393**	**$ 187,728**
	Cash Flow Test											
25	Net Income Available for Loan Repayment	$ 113,597	$ 72,913	$ 186,067	$ 184,035	$ 184,736	$ 185,385	$ 185,979	$ 186,514	$ 186,987	$ 187,393	$ 187,728
26	Net Interfund Transfers (In - Out)	-	-	(10,000)	(10,000)	(10,000)	(10,000)	(10,000)	(10,000)	(10,000)	(10,000)	(10,000)
28	**Net Cash Flow**	**$ 33,029**	**$ (7,655)**	**$ 34,260**	**$ 32,228**	**$ 32,929**	**$ 33,578**	**$ 34,172**	**$ 34,707**	**$ 35,180**	**$ 35,586**	**$ 35,921**
	Unrestricted Reserve Fund Test											
29	Balance At Beginning Of Fiscal Year	$ 413,631	$ 446,660	$ 439,005	$ 473,265	$ 505,492	$ 538,421	$ 571,999	$ 606,171	$ 640,878	$ 676,057	$ 711,643
30	Cash Flow Surplus/(Deficit)	33,029	-	34,260	32,228	32,929	33,578	34,172	34,707	35,180	35,586	35,921
31	Reserve Fund Balance Used For Cash Flow Deficit	-	(7,655)	-	-	-	-	-	-	-	-	-
32	**Balance At End Of Fiscal Year**	**$ 446,660**	**$ 439,005**	**$ 473,265**	**$ 505,492**	**$ 538,421**	**$ 571,999**	**$ 606,171**	**$ 640,878**	**$ 676,057**	**$ 711,643**	**$ 747,564**
33	Minimum Working Capital Reserve Target	221,568	228,241	245,888	253,287	260,174	267,251	274,522	281,994	289,672	297,561	305,668
34	**Excess/(Deficiency) Of Working Capital To Target**	**$ 225,092**	**$ 210,764**	**$ 227,376**	**$ 252,206**	**$ 278,247**	**$ 304,748**	**$ 331,648**	**$ 358,883**	**$ 386,385**	**$ 414,082**	**$ 441,896**

Appendix F ALTERNATIVE 1 – FINANCIAL ANALYSIS FOR THE FULL-SYSTEM CAPACITY

Schedule 1 – Assumptions

Schedule 2 – Budgeted and Projected Cash Inflows

Schedule 3 - Budgeted and Projected Cash Outflows

Schedule 4 – Capital Improvement Plan

Schedule 5 – Debt Repayment Projections

Schedule 6 – Funding Summary

Schedule 7 – Cash Flow Pro Forma

Assumptions

Schedule 1

	FY 2026	FY 2027	FY 2028	FY 2029	FY 2030	FY 2031	FY 2032	FY 2033	FY 2034	FY 2035	FY 2036
Rate Increase Adoption Date	7/1/2025	7/1/2026	7/1/2027	7/1/2028	7/1/2029	7/1/2030	7/1/2031	7/1/2032	7/1/2033	7/1/2034	7/1/2035
Annual Growth											
Water											
Ending # of ACCTS	692	692	692	692	692	692	692	692	692	692	692
Capital Spending											
Annual Capital Budget (Future Year Dollars)	$ -	$ -	$ 2,816,020	$ -	$ -	$ -	$ -	$ -	$ -	$ -	$ -
Annual Percent Executed	100%	100%	100%	100%	100%	100%	100%	100%	100%	100%	100%
Operating Budget Reserve											
Target (Number of Months of Reserve)[1]	3	3	3	3	3	3	3	3	3	3	3
Operating Budget Execution Percentage[2]											
Personal Services	100%	100%	100%	100%	100%	100%	100%	100%	100%	100%	100%
Fixed Operations and Maintenance	100%	100%	100%	100%	100%	100%	100%	100%	100%	100%	100%
Variable Operations and Maintenance	100%	100%	100%	100%	100%	100%	100%	100%	100%	100%	100%

[1]Revenue Fund Operating Budget Reserve balance target assumes Restricted Reserves are not included.

[2]Execution percentages are applied to operating budget categories based on historical actuals compared to budgets.

Projection of Cash Inflows

Schedule 2

		FY 2026	FY 2027	FY 2028	FY 2029	FY 2030	FY 2031	FY 2032	FY 2033	FY 2034	FY 2035	FY 2036
	Assumed Rate Revenue Increases											
1	Assumed Water Rate Increase	0.00%	0.00%	30.00%	2.50%	2.50%	2.50%	2.50%	2.50%	2.50%	2.50%	2.50%
	Water Rate Revenue											
2	Usage Rate Revenue	$ 932,700	$ 932,700	$ 1,212,510	$ 1,242,823	$ 1,273,893	$ 1,305,741	$ 1,338,384	$ 1,371,844	$ 1,406,140	$ 1,441,293	$ 1,477,326
3	**Total Water Rate Revenue**	**$ 932,700**	**$ 932,700**	**$ 1,212,510**	**$ 1,242,823**	**$ 1,273,893**	**$ 1,305,741**	**$ 1,338,384**	**$ 1,371,844**	**$ 1,406,140**	**$ 1,441,293**	**$ 1,477,326**
	Other Operating Revenue											
4	Uncollected Revenue	$ -	$ (13,991)	$ (18,188)	$ (18,642)	$ (19,108)	$ (19,586)	$ (20,076)	$ (20,578)	$ (21,092)	$ (21,619)	$ (22,160)
5	**Total Other Operating Revenue**	**$ -**	**$ (13,991)**	**$ (18,188)**	**$ (18,642)**	**$ (19,108)**	**$ (19,586)**	**$ (20,076)**	**$ (20,578)**	**$ (21,092)**	**$ (21,619)**	**$ (22,160)**
	Non-Operating Revenue											
6	Fire	$ 1,020	$ 1,020	$ 1,020	$ 1,020	$ 1,020	$ 1,020	$ 1,020	$ 1,020	$ 1,020	$ 1,020	$ 1,020
7	Impact Fees	2,500	2,500	2,500	2,500	2,500	2,500	2,500	2,500	2,500	2,500	2,500
8	Customer Late Charges	25,649	25,649	25,649	25,649	25,649	25,649	25,649	25,649	25,649	25,649	25,649
9	Other Service Fees	2,000	2,000	2,000	2,000	2,000	2,000	2,000	2,000	2,000	2,000	2,000
10	Other Income	1,000	1,000	1,000	1,000	1,000	1,000	1,000	1,000	1,000	1,000	1,000
11	**Total Non-Operating Revenue**	**$ 32,169**	**$ 32,169**	**$ 32,169**	**$ 32,169**	**$ 32,169**	**$ 32,169**	**$ 32,169**	**$ 32,169**	**$ 32,169**	**$ 32,169**	**$ 32,169**
	Interest Income											
12	Unrestricted	$ 35,000	$ 35,000	$ 35,000	$ 35,000	$ 35,000	$ 35,000	$ 35,000	$ 35,000	$ 35,000	$ 35,000	$ 35,000
13	**Total Interest Income**	**$ 35,000**	**$ 35,000**	**$ 35,000**	**$ 35,000**	**$ 35,000**	**$ 35,000**	**$ 35,000**	**$ 35,000**	**$ 35,000**	**$ 35,000**	**$ 35,000**
14	**Total Cash Inflows**	**$ 999,869**	**$ 985,879**	**$ 1,261,491**	**$ 1,291,349**	**$ 1,321,954**	**$ 1,353,324**	**$ 1,385,477**	**$ 1,418,435**	**$ 1,452,217**	**$ 1,486,843**	**$ 1,522,335**

Projection of Cash Outflows

Schedule 3

		Escalation Factor	FY 2026	FY 2027	FY 2028	FY 2029	FY 2030	FY 2031	FY 2032	FY 2033	FY 2034	FY 2035	FY 2036
	Personal Services												
1	Salaries	Salaries & Wages	$ 364,274	$ 375,202	$ 386,458	$ 398,052	$ 409,994	$ 422,293	$ 434,962	$ 448,011	$ 461,451	$ 475,295	$ 489,554
2	Payroll Taxes	Default Inflation Factor	29,142	29,871	30,617	31,383	32,167	32,971	33,796	34,641	35,507	36,394	37,304
3	Medical Benefits	Employee Benefits	12,000	12,240	12,485	12,734	12,989	13,249	13,514	13,784	14,060	14,341	14,628
4	Worker's Comp.	Default Inflation Factor	21,856	22,402	22,962	23,537	24,125	24,728	25,346	25,980	26,629	27,295	27,978
5	**Total Personal Services**		**$ 427,272**	**$ 439,715**	**$ 452,523**	**$ 465,706**	**$ 479,275**	**$ 493,242**	**$ 507,618**	**$ 522,416**	**$ 537,647**	**$ 553,326**	**$ 569,463**
	Fixed O&M												
6	Infrastructure Repairs	Repair & Maintenance	$ 40,000	$ 40,800	$ 41,616	$ 42,448	$ 43,297	$ 44,163	$ 45,046	$ 45,947	$ 46,866	$ 47,804	$ 48,760
7	Maintenance Supplies	Default Inflation Factor	10,000	10,250	10,506	10,769	11,038	11,314	11,597	11,887	12,184	12,489	12,801
8	Water Samples & Reporting	Default Inflation Factor	16,000	16,400	16,810	17,230	17,661	18,103	18,555	19,019	19,494	19,982	20,481
9	Chloronation	Default Inflation Factor	10,000	10,250	10,506	10,769	11,038	11,314	11,597	11,887	12,184	12,489	12,801
10	Engineer & Professional Services	Default Inflation Factor	32,000	32,800	33,620	34,461	35,322	36,205	37,110	38,038	38,989	39,964	40,963
11	Office & General Supplies	Default Inflation Factor	7,000	7,175	7,354	7,538	7,727	7,920	8,118	8,321	8,529	8,742	8,961
12	Telephone System	Default Inflation Factor	22,700	23,268	23,849	24,445	25,057	25,683	26,325	26,983	27,658	28,349	29,058
13	Postage	Default Inflation Factor	12,000	12,300	12,608	12,923	13,246	13,577	13,916	14,264	14,621	14,986	15,361
14	Service Fees	Default Inflation Factor	5,600	5,740	5,884	6,031	6,181	6,336	6,494	6,657	6,823	6,994	7,168
15	Printing	Default Inflation Factor	500	513	525	538	552	566	580	594	609	624	640
16	Alarm System	Default Inflation Factor	1,600	1,640	1,681	1,723	1,766	1,810	1,856	1,902	1,949	1,998	2,048
17	Information Technology	Default Inflation Factor	5,600	5,740	5,884	6,031	6,181	6,336	6,494	6,657	6,823	6,994	7,168
18	Annual Meeting Expense	Default Inflation Factor	4,200	4,305	4,413	4,523	4,636	4,752	4,871	4,992	5,117	5,245	5,376
19	Conferences & Meetings	Default Inflation Factor	12,000	12,300	12,608	12,923	13,246	13,577	13,916	14,264	14,621	14,986	15,361
20	Professional Training & Certification	Default Inflation Factor	500	513	525	538	552	566	580	594	609	624	640
21	Insurance	Default Inflation Factor	16,000	16,400	16,810	17,230	17,661	18,103	18,555	19,019	19,494	19,982	20,481
22	Auto & Travel	Default Inflation Factor	3,500	3,588	3,677	3,769	3,863	3,960	4,059	4,160	4,264	4,371	4,480
23	Website Maintenance	Default Inflation Factor	3,500	3,588	3,677	3,769	3,863	3,960	4,059	4,160	4,264	4,371	4,480
24	Property Taxes	Default Inflation Factor	2,000	2,050	2,101	2,154	2,208	2,263	2,319	2,377	2,437	2,498	2,560
25	Taxes/License/Professional Dues	Default Inflation Factor	8,000	8,200	8,405	8,615	8,831	9,051	9,278	9,509	9,747	9,991	10,241
26	Professional Services	Default Inflation Factor	8,000	8,200	8,405	8,615	8,831	9,051	9,278	9,509	9,747	9,991	10,241
27	Legal	Default Inflation Factor	125,000	128,125	131,328	134,611	137,977	141,426	144,962	148,586	152,300	156,108	160,011
28	Accounting & Review	Default Inflation Factor	18,000	18,450	18,911	19,384	19,869	20,365	20,874	21,396	21,931	22,480	23,042
29	Grounds & Bldg Maintenance	Default Inflation Factor	10,000	10,250	10,506	10,769	11,038	11,314	11,597	11,887	12,184	12,489	12,801
30	Staff Appreciation	Default Inflation Factor	300	308	315	323	331	339	348	357	366	375	384
31	Annual O&M for Treatment and New Well	Default Inflation Factor	-	-	70,000	71,750	73,544	75,382	77,267	79,199	81,179	83,208	85,288
32	**Total Fixed O&M**		**$ 374,000**	**$ 383,150**	**$ 462,525**	**$ 473,880**	**$ 485,515**	**$ 497,436**	**$ 509,651**	**$ 522,167**	**$ 534,991**	**$ 548,132**	**$ 561,596**
	Variable O&M												
33	PG&E	Fuel, Utilities, Chemicals	$ 85,000	$ 90,100	$ 95,506	$ 101,236	$ 104,273	$ 107,402	$ 110,624	$ 113,942	$ 117,361	$ 120,882	$ 124,508

Projection of Cash Outflows **Schedule 3**

	Escalation Factor	FY 2026	FY 2027	FY 2028	FY 2029	FY 2030	FY 2031	FY 2032	FY 2033	FY 2034	FY 2035	FY 2036
34	**Total Variable O&M**	**$ 85,000**	**$ 90,100**	**$ 95,506**	**$ 101,236**	**$ 104,273**	**$ 107,402**	**$ 110,624**	**$ 113,942**	**$ 117,361**	**$ 120,882**	**$ 124,508**
	Total Expenses by Category											
35	Personal Services	$ 427,272	$ 439,715	$ 452,523	$ 465,706	$ 479,275	$ 493,242	$ 507,618	$ 522,416	$ 537,647	$ 553,326	$ 569,463
36	Fixed Operations & Maintenance	374,000	383,150	462,525	473,880	485,515	497,436	509,651	522,167	534,991	548,132	561,596
37	Variable Operations & Maintenance	85,000	90,100	95,506	101,236	104,273	107,402	110,624	113,942	117,361	120,882	124,508
38	**Total Expenses**	$ 886,272	$ 912,965	$ 1,010,554	$ 1,040,822	$ 1,069,063	$ 1,098,080	$ 1,127,893	$ 1,158,525	$ 1,190,000	$ 1,222,339	$ 1,255,568
	Expense Execustion Factors											
39	Personal Services	100%	100%	100%	100%	100%	100%	100%	100%	100%	100%	100%
40	Fixed Operations & Maintenance	100%	100%	100%	100%	100%	100%	100%	100%	100%	100%	100%
41	Variable Operations & Maintenance	100%	100%	100%	100%	100%	100%	100%	100%	100%	100%	100%
	Total Expenses at Execution											
42	Personal Services	$ 427,272	$ 439,715	$ 452,523	$ 465,706	$ 479,275	$ 493,242	$ 507,618	$ 522,416	$ 537,647	$ 553,326	$ 569,463
43	Fixed Operations & Maintenance	374,000	383,150	462,525	473,880	485,515	497,436	509,651	522,167	534,991	548,132	561,596
44	Variable Operations & Maintenance	85,000	90,100	95,506	101,236	104,273	107,402	110,624	113,942	117,361	120,882	124,508
45	**Total Expenses at Execution**	**$ 886,272**	**$ 912,965**	**$ 1,010,554**	**$ 1,040,822**	**$ 1,069,063**	**$ 1,098,080**	**$ 1,127,893**	**$ 1,158,525**	**$ 1,190,000**	**$ 1,222,339**	**$ 1,255,568**
	Transfers Out											
46	Capital Reserve	$ -	$ -	$ 10,000	$ 10,000	$ 10,000	$ 10,000	$ 10,000	$ 10,000	$ 10,000	$ 10,000	$ 10,000
47	**Total Transfers Out**	**$ -**	**$ -**	**$ 10,000**	**$ 10,000**	**$ 10,000**	**$ 10,000**	**$ 10,000**	**$ 10,000**	**$ 10,000**	**$ 10,000**	**$ 10,000**
	Debt Service											
48	Existing Debt	$ 80,568	$ 80,568	$ 80,568	$ 80,568	$ 80,568	$ 80,568	$ 80,568	$ 80,568	$ 80,568	$ 80,568	$ 80,568
49	New Debt	-	-	114,186	114,186	114,186	114,186	114,186	114,186	114,186	114,186	114,186
50	**Total Debt Service**	**$ 80,568**	**$ 80,568**	**$ 194,754**	**$ 194,754**	**$ 194,754**	**$ 194,754**	**$ 194,754**	**$ 194,754**	**$ 194,754**	**$ 194,754**	**$ 194,754**
51	**Total Cash Outflows**	**$ 966,840**	**$ 993,533**	**$ 1,215,307**	**$ 1,245,576**	**$ 1,273,817**	**$ 1,302,833**	**$ 1,332,646**	**$ 1,363,279**	**$ 1,394,753**	**$ 1,427,093**	**$ 1,460,321**

Capital Improvement Program **Schedule 4**

		FY 2026	FY 2027	FY 2028	FY 2029	FY 2030	FY 2031	FY 2032	FY 2033	FY 2034	FY 2035	FY 2036
1	Full-System Capacity	$ -	$ -	$ 2,734,000	$ -	$ -	$ -	$ -	$ -	$ -	$ -	$ -
2	**Total CIP Budget (in current dollars)**	**$ -**	**$ -**	**$ 2,734,000**	**$ -**	**$ -**	**$ -**	**$ -**	**$ -**	**$ -**	**$ -**	**$ -**
3	Cumulative Projected Cost Escalation[1]	0.0%	0.0%	3.0%	6.1%	9.3%	12.6%	15.9%	19.4%	23.0%	26.7%	30.5%
4	**Resulting CIP Funding Level**	**$ -**	**$ -**	**$ 2,816,020**	**$ -**	**$ -**	**$ -**	**$ -**	**$ -**	**$ -**	**$ -**	**$ -**
5	Annual CIP Execution Percentage	100%	100%	100%	100%	100%	100%	100%	100%	100%	100%	100%
6	**Final CIP Funding Level**	**$ -**	**$ -**	**$ 2,816,020**	**$ -**	**$ -**	**$ -**	**$ -**	**$ -**	**$ -**	**$ -**	**$ -**

[1] CIP Escalation factors are consistent with the Engineering News Record Construction Cost Index.

Debt Repayment Projections

Schedule 5

	FY 2026	FY 2027	FY 2028	FY 2029	FY 2030	FY 2031	FY 2032	FY 2033	FY 2034	FY 2035	FY 2036
Prior Loans											
SBA Loan	$ 80,568	$ 80,568	$ 80,568	$ 80,568	$ 80,568	$ 80,568	$ 80,568	$ 80,568	$ 80,568	$ 80,568	$ 80,568
New Debt	$ -	$ -	$ 114,186	$ 114,186	$ 114,186	$ 114,186	$ 114,186	$ 114,186	$ 114,186	$ 114,186	$ 114,186
Total Loan Repayment	**$ 80,568**	**$ 80,568**	**$ 194,754**	**$ 194,754**	**$ 194,754**	**$ 194,754**	**$ 194,754**	**$ 194,754**	**$ 194,754**	**$ 194,754**	**$ 194,754**

Funding Summary by Fund

Schedule 6

	FY 2026	FY 2027	FY 2028	FY 2029	FY 2030	FY 2031	FY 2032	FY 2033	FY 2034	FY 2035	FY 2036
Capital Reserve Fund											
Balance At Beginning Of Fiscal Year	$ -	$ -	$ 1,200,000	$ -	$ 10,000	$ 20,000	$ 30,000	$ 40,000	$ 50,000	$ 60,000	$ 70,000
Annual Revenues	-	1,200,000	10,000	10,000	10,000	10,000	10,000	10,000	10,000	10,000	10,000
Less: Annual Expenses	-	-	-	-	-	-	-	-	-	-	-
Less: Payment Of Debt Service	-	-	-	-	-	-	-	-	-	-	-
Subtotal	$ -	$ 1,200,000	$ 1,210,000	$ 10,000	$ 20,000	$ 30,000	$ 40,000	$ 50,000	$ 60,000	$ 70,000	$ 80,000
Less: Restricted Funds	-	-	-	-	-	-	-	-	-	-	-
Total Amount Available For Projects	$ -	$ 1,200,000	$ 1,210,000	$ 10,000	$ 20,000	$ 30,000	$ 40,000	$ 50,000	$ 60,000	$ 70,000	$ 80,000
Amount Paid For Projects	-	-	(1,210,000)	-	-	-	-	-	-	-	-
Subtotal	$ -	$ 1,200,000	$ -	$ 10,000	$ 20,000	$ 30,000	$ 40,000	$ 50,000	$ 60,000	$ 70,000	$ 80,000
Add Back: Restricted Funds	-	-	-	-	-	-	-	-	-	-	-
Plus: Interest Earnings	-	1,500	3,000	38	150	313	438	563	688	813	938
Less: Interest Allocated To Cash Flow	-	(1,500)	(3,000)	(38)	(150)	(313)	(438)	(563)	(688)	(813)	(938)
Balance At End Of Fiscal Year	**$ -**	**$ 1,200,000**	**$ -**	**$ 10,000**	**$ 20,000**	**$ 30,000**	**$ 40,000**	**$ 50,000**	**$ 60,000**	**$ 70,000**	**$ 80,000**
Revenue Fund											
Balance At Beginning Of Fiscal Year	$ 413,631	$ 446,660	$ 439,005	$ 485,190	$ 530,963	$ 579,101	$ 629,591	$ 682,422	$ 737,578	$ 795,042	$ 854,792
Net Cash Flow	33,029	(7,655)	46,184	45,774	48,137	50,490	52,831	55,156	57,464	59,750	62,014
Less: Cash-Funded Capital Projects	-	-	-	-	-	-	-	-	-	-	-
Less: Payment Of Loan	-	-	-	-	-	-	-	-	-	-	-
Subtotal	$ 446,660	$ 439,005	$ 485,190	$ 530,963	$ 579,101	$ 629,591	$ 682,422	$ 737,578	$ 795,042	$ 854,792	$ 916,806
Less: Restricted Funds	(221,568)	(228,241)	(252,638)	(260,205)	(267,266)	(274,520)	(281,973)	(289,631)	(297,500)	(305,585)	(313,892)
Total Amount Available For Projects	225,092	210,764	232,551	270,758	311,835	355,071	400,449	447,947	497,542	549,208	602,914
Amount Paid For Projects	-	-	-	-	-	-	-	-	-	-	-
Subtotal	$ 225,092	$ 210,764	$ 232,551	$ 270,758	$ 311,835	$ 355,071	$ 400,449	$ 447,947	$ 497,542	$ 549,208	$ 602,914
Add Back: Restricted Funds	221,568	228,241	252,638	260,205	267,266	274,520	281,973	289,631	297,500	305,585	313,892
Plus: Interest Earnings	1,075	1,107	2,310	3,811	5,550	7,554	8,200	8,875	9,579	10,311	11,072
Less: Interest Allocated To Cash Flow	(1,075)	(1,107)	(2,310)	(3,811)	(5,550)	(7,554)	(8,200)	(8,875)	(9,579)	(10,311)	(11,072)
Balance At End Of Fiscal Year	**$ 446,660**	**$ 439,005**	**$ 485,190**	**$ 530,963**	**$ 579,101**	**$ 629,591**	**$ 682,422**	**$ 737,578**	**$ 795,042**	**$ 854,792**	**$ 916,806**

Pro Forma **Schedule 7**

		FY 2026	FY 2027	FY 2028	FY 2029	FY 2030	FY 2031	FY 2032	FY 2033	FY 2034	FY 2035	FY 2036
	Operating Revenue											
1	Water Rate Revenue	$ 932,700	$ 932,700	$ 932,700	$ 1,212,510	$ 1,242,823	$ 1,273,893	$ 1,305,741	$ 1,338,384	$ 1,371,844	$ 1,406,140	$ 1,441,293
2	Subtotal	$ 932,700	$ 932,700	$ 932,700	$ 1,212,510	$ 1,242,823	$ 1,273,893	$ 1,305,741	$ 1,338,384	$ 1,371,844	$ 1,406,140	$ 1,441,293
3	*Weighted Average Rate Increase*	*0.00%*	*0.00%*	*30.00%*	*2.50%*	*2.50%*	*2.50%*	*2.50%*	*2.50%*	*2.50%*	*2.50%*	*2.50%*
4	Additional Rate Revenue From Rate Increase	-	-	279,810	30,313	31,071	31,847	32,644	33,460	34,296	35,153	36,032
5	Total Rate Revenue	$ 932,700	$ 932,700	$ 1,212,510	$ 1,242,823	$ 1,273,893	$ 1,305,741	$ 1,338,384	$ 1,371,844	$ 1,406,140	$ 1,441,293	$ 1,477,326
6	Plus: Other Operating Revenue	-	(13,991)	(18,188)	(18,642)	(19,108)	(19,586)	(20,076)	(20,578)	(21,092)	(21,619)	(22,160)
7	**Equals: Total Operating Revenue**	**$ 932,700**	**$ 918,710**	**$ 1,194,322**	**$ 1,224,180**	**$ 1,254,785**	**$ 1,286,155**	**$ 1,318,308**	**$ 1,351,266**	**$ 1,385,048**	**$ 1,419,674**	**$ 1,455,166**
	Less: Operating Expenses											
8	Personal Services	$ (427,272)	$ (439,715)	$ (452,523)	$ (465,706)	$ (479,275)	$ (493,242)	$ (507,618)	$ (522,416)	$ (537,647)	$ (553,326)	$ (569,463)
9	Variable Operations & Maintenance Costs	(85,000)	(90,100)	(95,506)	(101,236)	(104,273)	(107,402)	(110,624)	(113,942)	(117,361)	(120,882)	(124,508)
10	Operations & Maintenance Costs	(374,000)	(383,150)	(462,525)	(473,880)	(485,515)	(497,436)	(509,651)	(522,167)	(534,991)	(548,132)	(561,596)
11	**Equals: Net Operating Income**	**$ 46,428**	**$ 5,744**	**$ 183,769**	**$ 183,358**	**$ 185,722**	**$ 188,075**	**$ 190,416**	**$ 192,741**	**$ 195,048**	**$ 197,335**	**$ 199,598**
	Plus: Non-Operating Income/(Expense)											
12	Non-Operating Revenue	$ 32,169	$ 32,169	$ 32,169	$ 32,169	$ 32,169	$ 32,169	$ 32,169	$ 32,169	$ 32,169	$ 32,169	$ 32,169
13	Interest Income	35,000	35,000	35,000	35,000	35,000	35,000	35,000	35,000	35,000	35,000	35,000
14	**Equals: Net Income**	**$ 113,597**	**$ 72,913**	**$ 250,938**	**$ 250,527**	**$ 252,891**	**$ 255,244**	**$ 257,585**	**$ 259,910**	**$ 262,217**	**$ 264,504**	**$ 266,767**
15	**Equals: Net Income Available For Debt Service**	**$ 113,597**	**$ 72,913**	**$ 250,938**	**$ 250,527**	**$ 252,891**	**$ 255,244**	**$ 257,585**	**$ 259,910**	**$ 262,217**	**$ 264,504**	**$ 266,767**
	Cash Flow Test											
25	Net Income Available for Loan Repayment	$ 113,597	$ 72,913	$ 250,938	$ 250,527	$ 252,891	$ 255,244	$ 257,585	$ 259,910	$ 262,217	$ 264,504	$ 266,767
26	Net Interfund Transfers (In - Out)	-	-	(10,000)	(10,000)	(10,000)	(10,000)	(10,000)	(10,000)	(10,000)	(10,000)	(10,000)
28	**Net Cash Flow**	**$ 33,029**	**$ (7,655)**	**$ 46,184**	**$ 45,774**	**$ 48,137**	**$ 50,490**	**$ 52,831**	**$ 55,156**	**$ 57,464**	**$ 59,750**	**$ 62,014**
	Unrestricted Reserve Fund Test											
29	Balance At Beginning Of Fiscal Year	$ 413,631	$ 446,660	$ 439,005	$ 485,190	$ 530,963	$ 579,101	$ 629,591	$ 682,422	$ 737,578	$ 795,042	$ 854,792
30	Cash Flow Surplus/(Deficit)	33,029	-	46,184	45,774	48,137	50,490	52,831	55,156	57,464	59,750	62,014
31	Reserve Fund Balance Used For Cash Flow Deficit	-	(7,655)	-	-	-	-	-	-	-	-	-
32	**Balance At End Of Fiscal Year**	**$ 446,660**	**$ 439,005**	**$ 485,190**	**$ 530,963**	**$ 579,101**	**$ 629,591**	**$ 682,422**	**$ 737,578**	**$ 795,042**	**$ 854,792**	**$ 916,806**
33	Minimum Working Capital Reserve Target	221,568	228,241	252,638	260,205	267,266	274,520	281,973	289,631	297,500	305,585	313,892
34	**Excess/(Deficiency) Of Working Capital To Target**	**$ 225,092**	**$ 210,764**	**$ 232,551**	**$ 270,758**	**$ 311,835**	**$ 355,071**	**$ 400,449**	**$ 447,947**	**$ 497,542**	**$ 549,208**	**$ 602,914**

Appendix G ALTERNATIVE 2B – FINANCIAL ANALYSIS FOR THE POINT OF CONNECTION WITH BOOSTER PUMPS

Schedule 1 – Assumptions

Schedule 2 – Budgeted and Projected Cash Inflows

Schedule 3 - Budgeted and Projected Cash Outflows

Schedule 4 – Capital Improvement Plan

Schedule 5 – Debt Repayment Projections

Schedule 6 – Funding Summary

Schedule 7 – Cash Flow Pro Forma

Assumptions

Schedule 1

	FY 2026	FY 2027	FY 2028	FY 2029	FY 2030	FY 2031	FY 2032	FY 2033	FY 2034	FY 2035	FY 2036
Rate Increase Adoption Date	7/1/2025	7/1/2026	7/1/2027	7/1/2028	7/1/2029	7/1/2030	7/1/2031	7/1/2032	7/1/2033	7/1/2034	7/1/2035
Annual Growth											
Water											
Ending # of ACCTS	692	692	692	692	692	692	692	692	692	692	692
Capital Spending											
Annual Capital Budget (Future Year Dollars)	$ -	$ -	$ 1,199,950	$ -	$ -	$ -	$ -	$ -	$ -	$ -	$ -
Annual Percent Executed	100%	100%	100%	100%	100%	100%	100%	100%	100%	100%	100%
Operating Budget Reserve											
Target (Number of Months of Reserve)[1]	3	3	3	3	3	3	3	3	3	3	3
Operating Budget Execution Percentage[2]											
Personal Services	100%	100%	100%	100%	100%	100%	100%	100%	100%	100%	100%
Fixed Operations and Maintenance	100%	100%	100%	100%	100%	100%	100%	100%	100%	100%	100%
Variable Operations and Maintenance	100%	100%	100%	100%	100%	100%	100%	100%	100%	100%	100%

[1]Revenue Fund Operating Budget Reserve balance target assumes Restricted Reserves are not included.

[2]Execution percentages are applied to operating budget categories based on historical actuals compared to budgets.

Projection of Cash Inflows

Schedule 2

		FY 2026	FY 2027	FY 2028	FY 2029	FY 2030	FY 2031	FY 2032	FY 2033	FY 2034	FY 2035	FY 2036
	Assumed Rate Revenue Increases											
1	Assumed Water Rate Increase	0.00%	0.00%	143.00%	2.50%	2.50%	2.50%	2.50%	2.50%	2.50%	2.50%	2.50%
	Water Rate Revenue											
2	Usage Rate Revenue	$ 932,700	$ 932,700	$ 2,266,461	$ 2,323,123	$ 2,381,201	$ 2,440,731	$ 2,501,749	$ 2,564,293	$ 2,628,400	$ 2,694,110	$ 2,761,463
3	**Total Water Rate Revenue**	**$ 932,700**	**$ 932,700**	**$ 2,266,461**	**$ 2,323,123**	**$ 2,381,201**	**$ 2,440,731**	**$ 2,501,749**	**$ 2,564,293**	**$ 2,628,400**	**$ 2,694,110**	**$ 2,761,463**
	Other Operating Revenue											
4	Uncollected Revenue	$ -	$ (13,991)	$ (33,997)	$ (34,847)	$ (35,718)	$ (36,611)	$ (37,526)	$ (38,464)	$ (39,426)	$ (40,412)	$ (41,422)
5	**Total Other Operating Revenue**	**$ -**	**$ (13,991)**	**$ (33,997)**	**$ (34,847)**	**$ (35,718)**	**$ (36,611)**	**$ (37,526)**	**$ (38,464)**	**$ (39,426)**	**$ (40,412)**	**$ (41,422)**
	Non-Operating Revenue											
6	Fire	$ 1,020	$ 1,020	$ 1,020	$ 1,020	$ 1,020	$ 1,020	$ 1,020	$ 1,020	$ 1,020	$ 1,020	$ 1,020
7	Impact Fees	2,500	2,500	2,500	2,500	2,500	2,500	2,500	2,500	2,500	2,500	2,500
8	Customer Late Charges	25,649	25,649	25,649	25,649	25,649	25,649	25,649	25,649	25,649	25,649	25,649
9	Other Service Fees	2,000	2,000	2,000	2,000	2,000	2,000	2,000	2,000	2,000	2,000	2,000
10	Other Income	1,000	1,000	1,000	1,000	1,000	1,000	1,000	1,000	1,000	1,000	1,000
11	**Total Non-Operating Revenue**	**$ 32,169**	**$ 32,169**	**$ 32,169**	**$ 32,169**	**$ 32,169**	**$ 32,169**	**$ 32,169**	**$ 32,169**	**$ 32,169**	**$ 32,169**	**$ 32,169**
	Interest Income											
12	Unrestricted	$ 35,000	$ 35,000	$ 35,000	$ 35,000	$ 35,000	$ 35,000	$ 35,000	$ 35,000	$ 35,000	$ 35,000	$ 35,000
13	**Total Interest Income**	**$ 35,000**	**$ 35,000**	**$ 35,000**	**$ 35,000**	**$ 35,000**	**$ 35,000**	**$ 35,000**	**$ 35,000**	**$ 35,000**	**$ 35,000**	**$ 35,000**
14	**Total Cash Inflows**	**$ 999,869**	**$ 985,879**	**$ 2,299,633**	**$ 2,355,445**	**$ 2,412,652**	**$ 2,471,289**	**$ 2,531,392**	**$ 2,592,997**	**$ 2,656,143**	**$ 2,720,867**	**$ 2,787,210**

Projection of Cash Outflows **Schedule 3**

		Escalation Factor	FY 2026	FY 2027	FY 2028	FY 2029	FY 2030	FY 2031	FY 2032	FY 2033	FY 2034	FY 2035	FY 2036
	Personal Services												
1	Salaries	Salaries & Wages	$ 364,274	$ 375,202	$ 386,458	$ 398,052	$ 409,994	$ 422,293	$ 434,962	$ 448,011	$ 461,451	$ 475,295	$ 489,554
2	Payroll Taxes	Default Inflation Factor	29,142	29,871	30,617	31,383	32,167	32,971	33,796	34,641	35,507	36,394	37,304
3	Medical Benefits	Employee Benefits	12,000	12,240	12,485	12,734	12,989	13,249	13,514	13,784	14,060	14,341	14,628
4	Worker's Comp.	Default Inflation Factor	21,856	22,402	22,962	23,537	24,125	24,728	25,346	25,980	26,629	27,295	27,978
5	**Total Personal Services**		**$ 427,272**	**$ 439,715**	**$ 452,523**	**$ 465,706**	**$ 479,275**	**$ 493,242**	**$ 507,618**	**$ 522,416**	**$ 537,647**	**$ 553,326**	**$ 569,463**
	Fixed O&M												
6	Infrastructure Repairs	Repair & Maintenance	$ 40,000	$ 40,800	$ 41,616	$ 42,448	$ 43,297	$ 44,163	$ 45,046	$ 45,947	$ 46,866	$ 47,804	$ 48,760
7	Maintenance Supplies	Default Inflation Factor	10,000	10,250	10,506	10,769	11,038	11,314	11,597	11,887	12,184	12,489	12,801
8	Water Samples & Reporting	Default Inflation Factor	16,000	16,400	16,810	17,230	17,661	18,103	18,555	19,019	19,494	19,982	20,481
9	Chlorination	Default Inflation Factor	10,000	10,250	-	-	-	-	-	-	-	-	-
10	Engineer & Professional Services	Default Inflation Factor	32,000	32,800	33,620	34,461	35,322	36,205	37,110	38,038	38,989	39,964	40,963
11	Office & General Supplies	Default Inflation Factor	7,000	7,175	7,354	7,538	7,727	7,920	8,118	8,321	8,529	8,742	8,961
12	Telephone System	Default Inflation Factor	22,700	23,268	23,849	24,445	25,057	25,683	26,325	26,983	27,658	28,349	29,058
13	Postage	Default Inflation Factor	12,000	12,300	12,608	12,923	13,246	13,577	13,916	14,264	14,621	14,986	15,361
14	Service Fees	Default Inflation Factor	5,600	5,740	5,884	6,031	6,181	6,336	6,494	6,657	6,823	6,994	7,168
15	Printing	Default Inflation Factor	500	513	525	538	552	566	580	594	609	624	640
16	Alarm System	Default Inflation Factor	1,600	1,640	1,681	1,723	1,766	1,810	1,856	1,902	1,949	1,998	2,048
17	Information Technology	Default Inflation Factor	5,600	5,740	5,884	6,031	6,181	6,336	6,494	6,657	6,823	6,994	7,168
18	Annual Meeting Expense	Default Inflation Factor	4,200	4,305	4,413	4,523	4,636	4,752	4,871	4,992	5,117	5,245	5,376
19	Conferences & Meetings	Default Inflation Factor	12,000	12,300	12,608	12,923	13,246	13,577	13,916	14,264	14,621	14,986	15,361
20	Professional Training & Certification	Default Inflation Factor	500	513	525	538	552	566	580	594	609	624	640
21	Insurance	Default Inflation Factor	16,000	16,400	16,810	17,230	17,661	18,103	18,555	19,019	19,494	19,982	20,481
22	Auto & Travel	Default Inflation Factor	3,500	3,588	3,677	3,769	3,863	3,960	4,059	4,160	4,264	4,371	4,480
23	Website Maintenance	Default Inflation Factor	3,500	3,588	3,677	3,769	3,863	3,960	4,059	4,160	4,264	4,371	4,480
24	Property Taxes	Default Inflation Factor	2,000	2,050	2,101	2,154	2,208	2,263	2,319	2,377	2,437	2,498	2,560
25	Taxes/License/Professional Dues	Default Inflation Factor	8,000	8,200	8,405	8,615	8,831	9,051	9,278	9,509	9,747	9,991	10,241
26	Professional Services	Default Inflation Factor	8,000	8,200	8,405	8,615	8,831	9,051	9,278	9,509	9,747	9,991	10,241
27	Legal	Default Inflation Factor	125,000	128,125	131,328	134,611	137,977	141,426	144,962	148,586	152,300	156,108	160,011
28	Accounting & Review	Default Inflation Factor	18,000	18,450	18,911	19,384	19,869	20,365	20,874	21,396	21,931	22,480	23,042
29	Grounds & Bldg Maintenance	Default Inflation Factor	10,000	10,250	10,506	10,769	11,038	11,314	11,597	11,887	12,184	12,489	12,801
30	Staff Appreciation	Default Inflation Factor	300	308	315	323	331	339	348	357	366	375	384
31	Purchased Water from City of East Palo Alto[1]		-	-	1,200,000	1,200,000	1,200,000	1,200,000	1,200,000	1,200,000	1,200,000	1,200,000	1,200,000
32	**Total Fixed O&M**		**$ 374,000**	**$ 383,150**	**$ 1,582,019**	**$ 1,591,361**	**$ 1,600,933**	**$ 1,610,739**	**$ 1,620,787**	**$ 1,631,082**	**$ 1,641,629**	**$ 1,652,435**	**$ 1,663,507**
	Variable O&M												
33	PG&E	Fuel, Utilities, Chemicals	$ 85,000	$ 90,100	$ 95,506	$ 101,236	$ 104,273	$ 107,402	$ 110,624	$ 113,942	$ 117,361	$ 120,882	$ 124,508

Projection of Cash Outflows **Schedule 3**

	Escalation Factor	FY 2026	FY 2027	FY 2028	FY 2029	FY 2030	FY 2031	FY 2032	FY 2033	FY 2034	FY 2035	FY 2036
34	**Total Variable O&M**	**$ 85,000**	**$ 90,100**	**$ 95,506**	**$ 101,236**	**$ 104,273**	**$ 107,402**	**$ 110,624**	**$ 113,942**	**$ 117,361**	**$ 120,882**	**$ 124,508**
	Total Expenses by Category											
35	Personal Services	$ 427,272	$ 439,715	$ 452,523	$ 465,706	$ 479,275	$ 493,242	$ 507,618	$ 522,416	$ 537,647	$ 553,326	$ 569,463
36	Fixed Operations & Maintenance	374,000	383,150	1,582,019	1,591,361	1,600,933	1,610,739	1,620,787	1,631,082	1,641,629	1,652,435	1,663,507
37	Variable Operations & Maintenance	85,000	90,100	95,506	101,236	104,273	107,402	110,624	113,942	117,361	120,882	124,508
38	**Total Expenses**	$ 886,272	$ 912,965	$ 2,130,047	$ 2,158,303	$ 2,184,481	$ 2,211,383	$ 2,239,029	$ 2,267,440	$ 2,296,637	$ 2,326,642	$ 2,357,479
	Expense Execustion Factors											
39	Personal Services	100%	100%	100%	100%	100%	100%	100%	100%	100%	100%	100%
40	Fixed Operations & Maintenance	100%	100%	100%	100%	100%	100%	100%	100%	100%	100%	100%
41	Variable Operations & Maintenance	100%	100%	100%	100%	100%	100%	100%	100%	100%	100%	100%
	Total Expenses at Execution											
42	Personal Services	$ 427,272	$ 439,715	$ 452,523	$ 465,706	$ 479,275	$ 493,242	$ 507,618	$ 522,416	$ 537,647	$ 553,326	$ 569,463
43	Fixed Operations & Maintenance	374,000	383,150	1,582,019	1,591,361	1,600,933	1,610,739	1,620,787	1,631,082	1,641,629	1,652,435	1,663,507
44	Variable Operations & Maintenance	85,000	90,100	95,506	101,236	104,273	107,402	110,624	113,942	117,361	120,882	124,508
45	**Total Expenses at Execution**	**$ 886,272**	**$ 912,965**	**$ 2,130,047**	**$ 2,158,303**	**$ 2,184,481**	**$ 2,211,383**	**$ 2,239,029**	**$ 2,267,440**	**$ 2,296,637**	**$ 2,326,642**	**$ 2,357,479**
	Transfers Out											
46	Capital Reserve	$ -	$ -	$ 10,000	$ 10,000	$ 10,000	$ 10,000	$ 10,000	$ 10,000	$ 10,000	$ 10,000	$ 10,000
47	**Total Transfers Out**	**$ -**	**$ -**	**$ 10,000**	**$ 10,000**	**$ 10,000**	**$ 10,000**	**$ 10,000**	**$ 10,000**	**$ 10,000**	**$ 10,000**	**$ 10,000**
	Debt Service											
48	Existing Debt	$ 80,568	$ 80,568	$ 80,568	$ 80,568	$ 80,568	$ 80,568	$ 80,568	$ 80,568	$ 80,568	$ 80,568	$ 80,568
49	**Total Debt Service**	**$ 80,568**	**$ 80,568**	**$ 80,568**	**$ 80,568**	**$ 80,568**	**$ 80,568**	**$ 80,568**	**$ 80,568**	**$ 80,568**	**$ 80,568**	**$ 80,568**
50	**Total Cash Outflows**	**$ 966,840**	**$ 993,533**	**$ 2,220,615**	**$ 2,248,871**	**$ 2,275,049**	**$ 2,301,951**	**$ 2,329,597**	**$ 2,358,008**	**$ 2,387,205**	**$ 2,417,210**	**$ 2,448,047**

1 Amount will be based on a contract, so no escalation factor was applied.

Capital Improvement Program **Schedule 4**

		FY 2026	FY 2027	FY 2028	FY 2029	FY 2030	FY 2031	FY 2032	FY 2033	FY 2034	FY 2035	FY 2036
1	POCs with Booster Pumps	$ -	$ -	$ 1,165,000	$ -	$ -	$ -	$ -	$ -	$ -	$ -	$ -
2	**Total CIP Budget (in current dollars)**	**$ -**	**$ -**	**$ 1,165,000**	**$ -**	**$ -**	**$ -**	**$ -**	**$ -**	**$ -**	**$ -**	**$ -**
3	Cumulative Projected Cost Escalation[1]	0.0%	0.0%	3.0%	6.1%	9.3%	12.6%	15.9%	19.4%	23.0%	26.7%	30.5%
4	**Resulting CIP Funding Level**	**$ -**	**$ -**	**$ 1,199,950**	**$ -**	**$ -**	**$ -**	**$ -**	**$ -**	**$ -**	**$ -**	**$ -**
5	Annual CIP Execution Percentage	100%	100%	100%	100%	100%	100%	100%	100%	100%	100%	100%
6	**Final CIP Funding Level**	**$ -**	**$ -**	**$ 1,199,950**	**$ -**	**$ -**	**$ -**	**$ -**	**$ -**	**$ -**	**$ -**	**$ -**

[1] CIP Escalation factors are consistent with the Engineering News Record Construction Cost Index.

Debt Repayment Projections

Schedule 5

	FY 2026	FY 2027	FY 2028	FY 2029	FY 2030	FY 2031	FY 2032	FY 2033	FY 2034	FY 2035	FY 2036
Prior Loans											
SBA Loan	$ 80,568	$ 80,568	$ 80,568	$ 80,568	$ 80,568	$ 80,568	$ 80,568	$ 80,568	$ 80,568	$ 80,568	$ 80,568
Total Loan Repayment	**$ 80,568**	**$ 80,568**	**$ 80,568**	**$ 80,568**	**$ 80,568**	**$ 80,568**	**$ 80,568**	**$ 80,568**	**$ 80,568**	**$ 80,568**	**$ 80,568**

Funding Summary by Fund

Schedule 6

	FY 2026	FY 2027	FY 2028	FY 2029	FY 2030	FY 2031	FY 2032	FY 2033	FY 2034	FY 2035	FY 2036
Capital Reserve Fund											
Balance At Beginning Of Fiscal Year	$ -	$ -	$ 1,400,000	$ 210,050	$ 220,050	$ 230,050	$ 240,050	$ 250,050	$ 260,050	$ 270,050	$ 280,050
Annual Revenues	-	1,400,000	10,000	10,000	10,000	10,000	10,000	10,000	10,000	10,000	10,000
Less: Annual Expenses	-	-	-	-	-	-	-	-	-	-	-
Less: Payment Of Debt Service	-	-	-	-	-	-	-	-	-	-	-
Subtotal	$ -	$ 1,400,000	$ 1,410,000	$ 220,050	$ 230,050	$ 240,050	$ 250,050	$ 260,050	$ 270,050	$ 280,050	$ 290,050
Less: Restricted Funds	-	-	-	-	-	-	-	-	-	-	-
Total Amount Available For Projects	$ -	$ 1,400,000	$ 1,410,000	$ 220,050	$ 230,050	$ 240,050	$ 250,050	$ 260,050	$ 270,050	$ 280,050	$ 290,050
Amount Paid For Projects	-	-	(1,199,950)	-	-	-	-	-	-	-	-
Subtotal	$ -	$ 1,400,000	$ 210,050	$ 220,050	$ 230,050	$ 240,050	$ 250,050	$ 260,050	$ 270,050	$ 280,050	$ 290,050
Add Back: Restricted Funds	-	-	-	-	-	-	-	-	-	-	-
Plus: Interest Earnings	-	1,750	4,025	1,613	2,251	2,938	3,063	3,188	3,313	3,438	3,563
Less: Interest Allocated To Cash Flow	-	(1,750)	(4,025)	(1,613)	(2,251)	(2,938)	(3,063)	(3,188)	(3,313)	(3,438)	(3,563)
Balance At End Of Fiscal Year	**$ -**	**$ 1,400,000**	**$ 210,050**	**$ 220,050**	**$ 230,050**	**$ 240,050**	**$ 250,050**	**$ 260,050**	**$ 270,050**	**$ 280,050**	**$ 290,050**
Revenue Fund											
Balance At Beginning Of Fiscal Year	$ 413,631	$ 446,660	$ 439,005	$ 518,023	$ 624,597	$ 762,199	$ 931,537	$ 1,133,331	$ 1,368,321	$ 1,637,258	$ 1,940,915
Net Cash Flow	33,029	(7,655)	79,018	106,574	137,602	169,338	201,795	234,989	268,938	303,657	339,163
Less: Cash-Funded Capital Projects	-	-	-	-	-	-	-	-	-	-	-
Less: Payment Of Loan	-	-	-	-	-	-	-	-	-	-	-
Subtotal	$ 446,660	$ 439,005	$ 518,023	$ 624,597	$ 762,199	$ 931,537	$ 1,133,331	$ 1,368,321	$ 1,637,258	$ 1,940,915	$ 2,280,078
Less: Restricted Funds	(221,568)	(228,241)	(518,023)	(539,576)	(546,120)	(552,846)	(559,757)	(566,860)	(574,159)	(581,661)	(589,370)
Total Amount Available For Projects	225,092	210,764	-	85,021	216,079	378,691	573,574	801,461	1,063,099	1,359,255	1,690,709
Amount Paid For Projects	-	-	-	-	-	-	-	-	-	-	-
Subtotal	$ 225,092	$ 210,764	$ -	$ 85,021	$ 216,079	$ 378,691	$ 573,574	$ 801,461	$ 1,063,099	$ 1,359,255	$ 1,690,709
Add Back: Restricted Funds	221,568	228,241	518,023	539,576	546,120	552,846	559,757	566,860	574,159	581,661	589,370
Plus: Interest Earnings	1,075	1,107	2,393	4,285	6,934	10,586	12,905	15,635	18,785	22,364	26,381
Less: Interest Allocated To Cash Flow	(1,075)	(1,107)	(2,393)	(4,285)	(6,934)	(10,586)	(12,905)	(15,635)	(18,785)	(22,364)	(26,381)
Balance At End Of Fiscal Year	**$ 446,660**	**$ 439,005**	**$ 518,023**	**$ 624,597**	**$ 762,199**	**$ 931,537**	**$ 1,133,331**	**$ 1,368,321**	**$ 1,637,258**	**$ 1,940,915**	**$ 2,280,078**

Pro Forma **Schedule 7**

		FY 2026	FY 2027	FY 2028	FY 2029	FY 2030	FY 2031	FY 2032	FY 2033	FY 2034	FY 2035	FY 2036
	Operating Revenue											
1	Water Rate Revenue	$ 932,700	$ 932,700	$ 932,700	$ 2,266,461	$ 2,323,123	$ 2,381,201	$ 2,440,731	$ 2,501,749	$ 2,564,293	$ 2,628,400	$ 2,694,110
2	Subtotal	$ 932,700	$ 932,700	$ 932,700	$ 2,266,461	$ 2,323,123	$ 2,381,201	$ 2,440,731	$ 2,501,749	$ 2,564,293	$ 2,628,400	$ 2,694,110
3	*Weighted Average Rate Increase*	*0.00%*	*0.00%*	*143.00%*	*2.50%*	*2.50%*	*2.50%*	*2.50%*	*2.50%*	*2.50%*	*2.50%*	*2.50%*
4	Additional Rate Revenue From Rate Increase	-	-	1,333,761	56,662	58,078	59,530	61,018	62,544	64,107	65,710	67,353
5	Total Rate Revenue	$ 932,700	$ 932,700	$ 2,266,461	$ 2,323,123	$ 2,381,201	$ 2,440,731	$ 2,501,749	$ 2,564,293	$ 2,628,400	$ 2,694,110	$ 2,761,463
6	Plus: Other Operating Revenue	-	(13,991)	(33,997)	(34,847)	(35,718)	(36,611)	(37,526)	(38,464)	(39,426)	(40,412)	(41,422)
7	**Equals: Total Operating Revenue**	**$ 932,700**	**$ 918,710**	**$ 2,232,464**	**$ 2,288,276**	**$ 2,345,483**	**$ 2,404,120**	**$ 2,464,223**	**$ 2,525,828**	**$ 2,588,974**	**$ 2,653,698**	**$ 2,720,041**
	Less: Operating Expenses											
8	Personal Services	$ (427,272)	$ (439,715)	$ (452,523)	$ (465,706)	$ (479,275)	$ (493,242)	$ (507,618)	$ (522,416)	$ (537,647)	$ (553,326)	$ (569,463)
9	Variable Operations & Maintenance Costs	(85,000)	(90,100)	(95,506)	(101,236)	(104,273)	(107,402)	(110,624)	(113,942)	(117,361)	(120,882)	(124,508)
10	Operations & Maintenance Costs	(374,000)	(383,150)	(1,582,019)	(1,591,361)	(1,600,933)	(1,610,739)	(1,620,787)	(1,631,082)	(1,641,629)	(1,652,435)	(1,663,507)
11	**Equals: Net Operating Income**	**$ 46,428**	**$ 5,744**	**$ 102,417**	**$ 129,973**	**$ 161,001**	**$ 192,737**	**$ 225,194**	**$ 258,388**	**$ 292,337**	**$ 327,056**	**$ 362,562**
	Plus: Non-Operating Income/(Expense)											
12	Non-Operating Revenue	$ 32,169	$ 32,169	$ 32,169	$ 32,169	$ 32,169	$ 32,169	$ 32,169	$ 32,169	$ 32,169	$ 32,169	$ 32,169
13	Interest Income	35,000	35,000	35,000	35,000	35,000	35,000	35,000	35,000	35,000	35,000	35,000
	Transfers In	-	-	-	-	-	-	-	-	-	-	-
14	**Equals: Net Income**	**$ 113,597**	**$ 72,913**	**$ 169,586**	**$ 197,142**	**$ 228,170**	**$ 259,906**	**$ 292,363**	**$ 325,557**	**$ 359,506**	**$ 394,225**	**$ 429,731**
	Less: Revenues Excluded From Coverage Test											
	Transfers In	$ -	$ -	$ -	$ -	$ -	$ -	$ -	$ -	$ -	$ -	$ -
15	**Equals: Net Income Available For Debt Service**	**$ 113,597**	**$ 72,913**	**$ 169,586**	**$ 197,142**	**$ 228,170**	**$ 259,906**	**$ 292,363**	**$ 325,557**	**$ 359,506**	**$ 394,225**	**$ 429,731**
	Cash Flow Test											
24	Net Income Available for Loan Repayment	$ 113,597	$ 72,913	$ 169,586	$ 197,142	$ 228,170	$ 259,906	$ 292,363	$ 325,557	$ 359,506	$ 394,225	$ 429,731
25	Net Interfund Transfers (In - Out)	-	-	(10,000)	(10,000)	(10,000)	(10,000)	(10,000)	(10,000)	(10,000)	(10,000)	(10,000)
27	**Net Cash Flow**	**$ 33,029**	**$ (7,655)**	**$ 79,018**	**$ 106,574**	**$ 137,602**	**$ 169,338**	**$ 201,795**	**$ 234,989**	**$ 268,938**	**$ 303,657**	**$ 339,163**
	Unrestricted Reserve Fund Test											
28	Balance At Beginning Of Fiscal Year	$ 413,631	$ 446,660	$ 439,005	$ 518,023	$ 624,597	$ 762,199	$ 931,537	$ 1,133,331	$ 1,368,321	$ 1,637,258	$ 1,940,915
29	Cash Flow Surplus/(Deficit)	33,029	-	79,018	106,574	137,602	169,338	201,795	234,989	268,938	303,657	339,163
30	Reserve Fund Balance Used For Cash Flow Deficit	-	(7,655)	-	-	-	-	-	-	-	-	-
31	**Balance At End Of Fiscal Year**	**$ 446,660**	**$ 439,005**	**$ 518,023**	**$ 624,597**	**$ 762,199**	**$ 931,537**	**$ 1,133,331**	**$ 1,368,321**	**$ 1,637,258**	**$ 1,940,915**	**$ 2,280,078**
32	Minimum Working Capital Reserve Target	221,568	228,241	532,512	539,576	546,120	552,846	559,757	566,860	574,159	581,661	589,370
33	**Excess/(Deficiency) Of Working Capital To Target**	**$ 225,092**	**$ 210,764**	**$ (14,489)**	**$ 85,021**	**$ 216,079**	**$ 378,691**	**$ 573,574**	**$ 801,461**	**$ 1,063,099**	**$ 1,359,255**	**$ 1,690,709**

Appendix H ALTERNATIVE 2B – FINANCIAL ANALYSIS FOR THE PIPELINE TO TANK

Schedule 1 – Assumptions

Schedule 2 – Budgeted and Projected Cash Inflows

Schedule 3 - Budgeted and Projected Cash Outflows

Schedule 4 – Capital Improvement Plan

Schedule 5 – Debt Repayment Projections

Schedule 6 – Funding Summary

Schedule 7 – Cash Flow Pro Forma



Assumptions

Schedule 1

	FY 2026	FY 2027	FY 2028	FY 2029	FY 2030	FY 2031	FY 2032	FY 2033	FY 2034	FY 2035	FY 2036
Rate Increase Adoption Date	7/1/2025	7/1/2026	7/1/2027	7/1/2028	7/1/2029	7/1/2030	7/1/2031	7/1/2032	7/1/2033	7/1/2034	7/1/2035
Annual Growth											
Water											
Ending # of ACCTS	692	692	692	692	692	692	692	692	692	692	692
Capital Spending											
Annual Capital Budget (Future Year Dollars)	$ -	$ -	$ 1,454,360	$ -	$ -	$ -	$ -	$ -	$ -	$ -	$ -
Annual Percent Executed	100%	100%	100%	100%	100%	100%	100%	100%	100%	100%	100%
Operating Budget Reserve											
Target (Number of Months of Reserve)[1]	3	3	3	3	3	3	3	3	3	3	3
Operating Budget Execution Percentage[2]											
Personal Services	100%	100%	100%	100%	100%	100%	100%	100%	100%	100%	100%
Fixed Operations and Maintenance	100%	100%	100%	100%	100%	100%	100%	100%	100%	100%	100%
Variable Operations and Maintenance	100%	100%	100%	100%	100%	100%	100%	100%	100%	100%	100%

[1]Revenue Fund Operating Budget Reserve balance target assumes Restricted Reserves are not included.

[2]Execution percentages are applied to operating budget categories based on historical actuals compared to budgets.

Projection of Cash Inflows

Schedule 2

		FY 2026	FY 2027	FY 2028	FY 2029	FY 2030	FY 2031	FY 2032	FY 2033	FY 2034	FY 2035	FY 2036
	Assumed Rate Revenue Increases											
1	Assumed Water Rate Increase	0.00%	0.00%	143.00%	2.50%	2.50%	2.50%	2.50%	2.50%	2.50%	2.50%	2.50%
	Water Rate Revenue											
2	Usage Rate Revenue	$ 932,700	$ 932,700	$ 2,266,461	$ 2,323,123	$ 2,381,201	$ 2,440,731	$ 2,501,749	$ 2,564,293	$ 2,628,400	$ 2,694,110	$ 2,761,463
3	**Total Water Rate Revenue**	**$ 932,700**	**$ 932,700**	**$ 2,266,461**	**$ 2,323,123**	**$ 2,381,201**	**$ 2,440,731**	**$ 2,501,749**	**$ 2,564,293**	**$ 2,628,400**	**$ 2,694,110**	**$ 2,761,463**
	Other Operating Revenue											
4	Uncollected Revenue	$ -	$ (13,991)	$ (33,997)	$ (34,847)	$ (35,718)	$ (36,611)	$ (37,526)	$ (38,464)	$ (39,426)	$ (40,412)	$ (41,422)
5	**Total Other Operating Revenue**	**$ -**	**$ (13,991)**	**$ (33,997)**	**$ (34,847)**	**$ (35,718)**	**$ (36,611)**	**$ (37,526)**	**$ (38,464)**	**$ (39,426)**	**$ (40,412)**	**$ (41,422)**
	Non-Operating Revenue											
6	Fire	$ 1,020	$ 1,020	$ 1,020	$ 1,020	$ 1,020	$ 1,020	$ 1,020	$ 1,020	$ 1,020	$ 1,020	$ 1,020
7	Impact Fees	2,500	2,500	2,500	2,500	2,500	2,500	2,500	2,500	2,500	2,500	2,500
8	Customer Late Charges	25,649	25,649	25,649	25,649	25,649	25,649	25,649	25,649	25,649	25,649	25,649
9	Other Service Fees	2,000	2,000	2,000	2,000	2,000	2,000	2,000	2,000	2,000	2,000	2,000
10	Other Income	1,000	1,000	1,000	1,000	1,000	1,000	1,000	1,000	1,000	1,000	1,000
11	**Total Non-Operating Revenue**	**$ 32,169**	**$ 32,169**	**$ 32,169**	**$ 32,169**	**$ 32,169**	**$ 32,169**	**$ 32,169**	**$ 32,169**	**$ 32,169**	**$ 32,169**	**$ 32,169**
	Interest Income											
12	Unrestricted	$ 35,000	$ 35,000	$ 35,000	$ 35,000	$ 35,000	$ 35,000	$ 35,000	$ 35,000	$ 35,000	$ 35,000	$ 35,000
13	**Total Interest Income**	**$ 35,000**	**$ 35,000**	**$ 35,000**	**$ 35,000**	**$ 35,000**	**$ 35,000**	**$ 35,000**	**$ 35,000**	**$ 35,000**	**$ 35,000**	**$ 35,000**
14	**Total Cash Inflows**	**$ 999,869**	**$ 985,879**	**$ 2,299,633**	**$ 2,355,445**	**$ 2,412,652**	**$ 2,471,289**	**$ 2,531,392**	**$ 2,592,997**	**$ 2,656,143**	**$ 2,720,867**	**$ 2,787,210**

Projection of Cash Outflows **Schedule 3**

		Escalation Factor	FY 2026	FY 2027	FY 2028	FY 2029	FY 2030	FY 2031	FY 2032	FY 2033	FY 2034	FY 2035	FY 2036
	Personal Services												
1	Salaries	Salaries & Wages	$ 364,274	$ 375,202	$ 386,458	$ 398,052	$ 409,994	$ 422,293	$ 434,962	$ 448,011	$ 461,451	$ 475,295	$ 489,554
2	Payroll Taxes	Default Inflation Factor	29,142	29,871	30,617	31,383	32,167	32,971	33,796	34,641	35,507	36,394	37,304
3	Medical Benefits	Employee Benefits	12,000	12,240	12,485	12,734	12,989	13,249	13,514	13,784	14,060	14,341	14,628
4	Worker's Comp.	Default Inflation Factor	21,856	22,402	22,962	23,537	24,125	24,728	25,346	25,980	26,629	27,295	27,978
5	**Total Personal Services**		**$ 427,272**	**$ 439,715**	**$ 452,523**	**$ 465,706**	**$ 479,275**	**$ 493,242**	**$ 507,618**	**$ 522,416**	**$ 537,647**	**$ 553,326**	**$ 569,463**
	Fixed O&M												
6	Infrastructure Repairs	Repair & Maintenance	$ 40,000	$ 40,800	$ 41,616	$ 42,448	$ 43,297	$ 44,163	$ 45,046	$ 45,947	$ 46,866	$ 47,804	$ 48,760
7	Maintenance Supplies	Default Inflation Factor	10,000	10,250	10,506	10,769	11,038	11,314	11,597	11,887	12,184	12,489	12,801
8	Water Samples & Reporting	Default Inflation Factor	16,000	16,400	16,810	17,230	17,661	18,103	18,555	19,019	19,494	19,982	20,481
9	Chlorination	Default Inflation Factor	10,000	10,250	-	-	-	-	-	-	-	-	-
10	Engineer & Professional Services	Default Inflation Factor	32,000	32,800	33,620	34,461	35,322	36,205	37,110	38,038	38,989	39,964	40,963
11	Office & General Supplies	Default Inflation Factor	7,000	7,175	7,354	7,538	7,727	7,920	8,118	8,321	8,529	8,742	8,961
12	Telephone System	Default Inflation Factor	22,700	23,268	23,849	24,445	25,057	25,683	26,325	26,983	27,658	28,349	29,058
13	Postage	Default Inflation Factor	12,000	12,300	12,608	12,923	13,246	13,577	13,916	14,264	14,621	14,986	15,361
14	Service Fees	Default Inflation Factor	5,600	5,740	5,884	6,031	6,181	6,336	6,494	6,657	6,823	6,994	7,168
15	Printing	Default Inflation Factor	500	513	525	538	552	566	580	594	609	624	640
16	Alarm System	Default Inflation Factor	1,600	1,640	1,681	1,723	1,766	1,810	1,856	1,902	1,949	1,998	2,048
17	Information Technology	Default Inflation Factor	5,600	5,740	5,884	6,031	6,181	6,336	6,494	6,657	6,823	6,994	7,168
18	Annual Meeting Expense	Default Inflation Factor	4,200	4,305	4,413	4,523	4,636	4,752	4,871	4,992	5,117	5,245	5,376
19	Conferences & Meetings	Default Inflation Factor	12,000	12,300	12,608	12,923	13,246	13,577	13,916	14,264	14,621	14,986	15,361
20	Professional Training & Certification	Default Inflation Factor	500	513	525	538	552	566	580	594	609	624	640
21	Insurance	Default Inflation Factor	16,000	16,400	16,810	17,230	17,661	18,103	18,555	19,019	19,494	19,982	20,481
22	Auto & Travel	Default Inflation Factor	3,500	3,588	3,677	3,769	3,863	3,960	4,059	4,160	4,264	4,371	4,480
23	Website Maintenance	Default Inflation Factor	3,500	3,588	3,677	3,769	3,863	3,960	4,059	4,160	4,264	4,371	4,480
24	Property Taxes	Default Inflation Factor	2,000	2,050	2,101	2,154	2,208	2,263	2,319	2,377	2,437	2,498	2,560
25	Taxes/License/Professional Dues	Default Inflation Factor	8,000	8,200	8,405	8,615	8,831	9,051	9,278	9,509	9,747	9,991	10,241
26	Professional Services	Default Inflation Factor	8,000	8,200	8,405	8,615	8,831	9,051	9,278	9,509	9,747	9,991	10,241
27	Legal	Default Inflation Factor	125,000	128,125	131,328	134,611	137,977	141,426	144,962	148,586	152,300	156,108	160,011
28	Accounting & Review	Default Inflation Factor	18,000	18,450	18,911	19,384	19,869	20,365	20,874	21,396	21,931	22,480	23,042
29	Grounds & Bldg Maintenance	Default Inflation Factor	10,000	10,250	10,506	10,769	11,038	11,314	11,597	11,887	12,184	12,489	12,801
30	Staff Appreciation	Default Inflation Factor	300	308	315	323	331	339	348	357	366	375	384
31	Purchased Water from City of East Palo Alto[1]		-	-	1,200,000	1,200,000	1,200,000	1,200,000	1,200,000	1,200,000	1,200,000	1,200,000	1,200,000
32	**Total Fixed O&M**		**$ 374,000**	**$ 383,150**	**$ 1,582,019**	**$ 1,591,361**	**$ 1,600,933**	**$ 1,610,739**	**$ 1,620,787**	**$ 1,631,082**	**$ 1,641,629**	**$ 1,652,435**	**$ 1,663,507**
	Variable O&M												
33	PG&E	Fuel, Utilities, Chemicals	$ 85,000	$ 90,100	$ 95,506	$ 101,236	$ 104,273	$ 107,402	$ 110,624	$ 113,942	$ 117,361	$ 120,882	$ 124,508

Projection of Cash Outflows **Schedule 3**

	Escalation Factor	FY 2026	FY 2027	FY 2028	FY 2029	FY 2030	FY 2031	FY 2032	FY 2033	FY 2034	FY 2035	FY 2036
34	**Total Variable O&M**	**$ 85,000**	**$ 90,100**	**$ 95,506**	**$ 101,236**	**$ 104,273**	**$ 107,402**	**$ 110,624**	**$ 113,942**	**$ 117,361**	**$ 120,882**	**$ 124,508**
	Total Expenses by Category											
35	Personal Services	$ 427,272	$ 439,715	$ 452,523	$ 465,706	$ 479,275	$ 493,242	$ 507,618	$ 522,416	$ 537,647	$ 553,326	$ 569,463
36	Fixed Operations & Maintenance	374,000	383,150	1,582,019	1,591,361	1,600,933	1,610,739	1,620,787	1,631,082	1,641,629	1,652,435	1,663,507
37	Variable Operations & Maintenance	85,000	90,100	95,506	101,236	104,273	107,402	110,624	113,942	117,361	120,882	124,508
38	**Total Expenses**	$ 886,272	$ 912,965	$ 2,130,047	$ 2,158,303	$ 2,184,481	$ 2,211,383	$ 2,239,029	$ 2,267,440	$ 2,296,637	$ 2,326,642	$ 2,357,479
	Expense Execustion Factors											
39	Personal Services	100%	100%	100%	100%	100%	100%	100%	100%	100%	100%	100%
40	Fixed Operations & Maintenance	100%	100%	100%	100%	100%	100%	100%	100%	100%	100%	100%
41	Variable Operations & Maintenance	100%	100%	100%	100%	100%	100%	100%	100%	100%	100%	100%
	Total Expenses at Execution											
42	Personal Services	$ 427,272	$ 439,715	$ 452,523	$ 465,706	$ 479,275	$ 493,242	$ 507,618	$ 522,416	$ 537,647	$ 553,326	$ 569,463
43	Fixed Operations & Maintenance	374,000	383,150	1,582,019	1,591,361	1,600,933	1,610,739	1,620,787	1,631,082	1,641,629	1,652,435	1,663,507
44	Variable Operations & Maintenance	85,000	90,100	95,506	101,236	104,273	107,402	110,624	113,942	117,361	120,882	124,508
45	**Total Expenses at Execution**	**$ 886,272**	**$ 912,965**	**$ 2,130,047**	**$ 2,158,303**	**$ 2,184,481**	**$ 2,211,383**	**$ 2,239,029**	**$ 2,267,440**	**$ 2,296,637**	**$ 2,326,642**	**$ 2,357,479**
	Transfers Out											
46	Capital Reserve	$ -	$ -	$ 10,000	$ 10,000	$ 10,000	$ 10,000	$ 10,000	$ 10,000	$ 10,000	$ 10,000	$ 10,000
47	**Total Transfers Out**	**$ -**	**$ -**	**$ 10,000**	**$ 10,000**	**$ 10,000**	**$ 10,000**	**$ 10,000**	**$ 10,000**	**$ 10,000**	**$ 10,000**	**$ 10,000**
	Debt Service											
48	Existing Debt	$ 80,568	$ 80,568	$ 80,568	$ 80,568	$ 80,568	$ 80,568	$ 80,568	$ 80,568	$ 80,568	$ 80,568	$ 80,568
49	New Debt	-	-	3,154	3,154	3,154	3,154	3,154	3,154	3,154	3,154	3,154
50	**Total Debt Service**	**$ 80,568**	**$ 80,568**	**$ 83,722**	**$ 83,722**	**$ 83,722**	**$ 83,722**	**$ 83,722**	**$ 83,722**	**$ 83,722**	**$ 83,722**	**$ 83,722**
51	**Total Cash Outflows**	**$ 966,840**	**$ 993,533**	**$ 2,223,769**	**$ 2,252,025**	**$ 2,278,203**	**$ 2,305,105**	**$ 2,332,751**	**$ 2,361,162**	**$ 2,390,359**	**$ 2,420,364**	**$ 2,451,201**

1 Amount will be based on a contract, so no escalation factor was applied.

Capital Improvement Program **Schedule 4**

		FY 2026	FY 2027	FY 2028	FY 2029	FY 2030	FY 2031	FY 2032	FY 2033	FY 2034	FY 2035	FY 2036
1	Pipeline to Tank	$ -	$ -	$ 1,412,000	$ -	$ -	$ -	$ -	$ -	$ -	$ -	$ -
2	**Total CIP Budget (in current dollars)**	**$ -**	**$ -**	**$ 1,412,000**	**$ -**	**$ -**	**$ -**	**$ -**	**$ -**	**$ -**	**$ -**	**$ -**
3	Cumulative Projected Cost Escalation[1]	0.0%	0.0%	3.0%	6.1%	9.3%	12.6%	15.9%	19.4%	23.0%	26.7%	30.5%
4	**Resulting CIP Funding Level**	**$ -**	**$ -**	**$ 1,454,360**	**$ -**	**$ -**	**$ -**	**$ -**	**$ -**	**$ -**	**$ -**	**$ -**
5	Annual CIP Execution Percentage	100%	100%	100%	100%	100%	100%	100%	100%	100%	100%	100%
6	**Final CIP Funding Level**	**$ -**	**$ -**	**$ 1,454,360**	**$ -**	**$ -**	**$ -**	**$ -**	**$ -**	**$ -**	**$ -**	**$ -**

[1] CIP Escalation factors are consistent with the Engineering News Record Construction Cost Index.

Debt Repayment Projections

Schedule 5

	FY 2026	FY 2027	FY 2028	FY 2029	FY 2030	FY 2031	FY 2032	FY 2033	FY 2034	FY 2035	FY 2036
Prior Loans											
SBA Loan	$ 80,568	$ 80,568	$ 80,568	$ 80,568	$ 80,568	$ 80,568	$ 80,568	$ 80,568	$ 80,568	$ 80,568	$ 80,568
New Debt	$ -	$ -	$ 3,154	$ 3,154	$ 3,154	$ 3,154	$ 3,154	$ 3,154	$ 3,154	$ 3,154	$ 3,154
Total Loan Repayment	**$ 80,568**	**$ 80,568**	**$ 83,722**	**$ 83,722**	**$ 83,722**	**$ 83,722**	**$ 83,722**	**$ 83,722**	**$ 83,722**	**$ 83,722**	**$ 83,722**

Funding Summary by Fund

Schedule 6

	FY 2026	FY 2027	FY 2028	FY 2029	FY 2030	FY 2031	FY 2032	FY 2033	FY 2034	FY 2035	FY 2036
Capital Reserve Fund											
Balance At Beginning Of Fiscal Year	$ -	$ -	$ 1,400,000	$ -	$ 10,000	$ 20,000	$ 30,000	$ 40,000	$ 50,000	$ 60,000	$ 70,000
Annual Revenues	-	1,400,000	10,000	10,000	10,000	10,000	10,000	10,000	10,000	10,000	10,000
Less: Annual Expenses	-	-	-	-	-	-	-	-	-	-	-
Less: Payment Of Debt Service	-	-	-	-	-	-	-	-	-	-	-
Subtotal	$ -	$ 1,400,000	$ 1,410,000	$ 10,000	$ 20,000	$ 30,000	$ 40,000	$ 50,000	$ 60,000	$ 70,000	$ 80,000
Less: Restricted Funds	-	-	-	-	-	-	-	-	-	-	-
Total Amount Available For Projects	$ -	$ 1,400,000	$ 1,410,000	$ 10,000	$ 20,000	$ 30,000	$ 40,000	$ 50,000	$ 60,000	$ 70,000	$ 80,000
Amount Paid For Projects	-	-	(1,410,000)	-	-	-	-	-	-	-	-
Subtotal	$ -	$ 1,400,000	$ -	$ 10,000	$ 20,000	$ 30,000	$ 40,000	$ 50,000	$ 60,000	$ 70,000	$ 80,000
Add Back: Restricted Funds	-	-	-	-	-	-	-	-	-	-	-
Plus: Interest Earnings	-	1,750	3,500	38	150	313	438	563	688	813	938
Less: Interest Allocated To Cash Flow	-	(1,750)	(3,500)	(38)	(150)	(313)	(438)	(563)	(688)	(813)	(938)
Balance At End Of Fiscal Year	**$ -**	**$ 1,400,000**	**$ -**	**$ 10,000**	**$ 20,000**	**$ 30,000**	**$ 40,000**	**$ 50,000**	**$ 60,000**	**$ 70,000**	**$ 80,000**
Revenue Fund											
Balance At Beginning Of Fiscal Year	$ 413,631	$ 446,660	$ 439,005	$ 514,869	$ 618,289	$ 752,737	$ 918,921	$ 1,117,561	$ 1,349,397	$ 1,615,181	$ 1,915,684
Net Cash Flow	33,029	(7,655)	75,864	103,420	134,448	166,184	198,641	231,835	265,784	300,503	336,009
Less: Cash-Funded Capital Projects	-	-	-	-	-	-	-	-	-	-	-
Less: Payment Of Loan	-	-	-	-	-	-	-	-	-	-	-
Subtotal	$ 446,660	$ 439,005	$ 514,869	$ 618,289	$ 752,737	$ 918,921	$ 1,117,561	$ 1,349,397	$ 1,615,181	$ 1,915,684	$ 2,251,693
Less: Restricted Funds	(221,568)	(228,241)	(514,869)	(539,576)	(546,120)	(552,846)	(559,757)	(566,860)	(574,159)	(581,661)	(589,370)
Total Amount Available For Projects	225,092	210,764	-	78,713	206,617	366,075	557,804	782,537	1,041,021	1,334,023	1,662,323
Amount Paid For Projects	-	-	-	-	-	-	-	-	-	-	-
Subtotal	$ 225,092	$ 210,764	$ -	$ 78,713	$ 206,617	$ 366,075	$ 557,804	$ 782,537	$ 1,041,021	$ 1,334,023	$ 1,662,323
Add Back: Restricted Funds	221,568	228,241	514,869	539,576	546,120	552,846	559,757	566,860	574,159	581,661	589,370
Plus: Interest Earnings	1,075	1,107	2,385	4,249	6,855	10,448	12,728	15,418	18,529	22,068	26,046
Less: Interest Allocated To Cash Flow	(1,075)	(1,107)	(2,385)	(4,249)	(6,855)	(10,448)	(12,728)	(15,418)	(18,529)	(22,068)	(26,046)
Balance At End Of Fiscal Year	**$ 446,660**	**$ 439,005**	**$ 514,869**	**$ 618,289**	**$ 752,737**	**$ 918,921**	**$ 1,117,561**	**$ 1,349,397**	**$ 1,615,181**	**$ 1,915,684**	**$ 2,251,693**

Pro Forma **Schedule 7**

		FY 2026	FY 2027	FY 2028	FY 2029	FY 2030	FY 2031	FY 2032	FY 2033	FY 2034	FY 2035	FY 2036
	Operating Revenue											
1	Water Rate Revenue	$ 932,700	$ 932,700	$ 932,700	$ 2,266,461	$ 2,323,123	$ 2,381,201	$ 2,440,731	$ 2,501,749	$ 2,564,293	$ 2,628,400	$ 2,694,110
2	Subtotal	$ 932,700	$ 932,700	$ 932,700	$ 2,266,461	$ 2,323,123	$ 2,381,201	$ 2,440,731	$ 2,501,749	$ 2,564,293	$ 2,628,400	$ 2,694,110
3	*Weighted Average Rate Increase*	*0.00%*	*0.00%*	*143.00%*	*2.50%*	*2.50%*	*2.50%*	*2.50%*	*2.50%*	*2.50%*	*2.50%*	*2.50%*
4	Additional Rate Revenue From Rate Increase	-	-	1,333,761	56,662	58,078	59,530	61,018	62,544	64,107	65,710	67,353
5	Total Rate Revenue	$ 932,700	$ 932,700	$ 2,266,461	$ 2,323,123	$ 2,381,201	$ 2,440,731	$ 2,501,749	$ 2,564,293	$ 2,628,400	$ 2,694,110	$ 2,761,463
6	Plus: Other Operating Revenue	-	(13,991)	(33,997)	(34,847)	(35,718)	(36,611)	(37,526)	(38,464)	(39,426)	(40,412)	(41,422)
7	**Equals: Total Operating Revenue**	**$ 932,700**	**$ 918,710**	**$ 2,232,464**	**$ 2,288,276**	**$ 2,345,483**	**$ 2,404,120**	**$ 2,464,223**	**$ 2,525,828**	**$ 2,588,974**	**$ 2,653,698**	**$ 2,720,041**
	Less: Operating Expenses											
8	Personal Services	$ (427,272)	$ (439,715)	$ (452,523)	$ (465,706)	$ (479,275)	$ (493,242)	$ (507,618)	$ (522,416)	$ (537,647)	$ (553,326)	$ (569,463)
9	Variable Operations & Maintenance Costs	(85,000)	(90,100)	(95,506)	(101,236)	(104,273)	(107,402)	(110,624)	(113,942)	(117,361)	(120,882)	(124,508)
10	Operations & Maintenance Costs	(374,000)	(383,150)	(1,582,019)	(1,591,361)	(1,600,933)	(1,610,739)	(1,620,787)	(1,631,082)	(1,641,629)	(1,652,435)	(1,663,507)
11	**Equals: Net Operating Income**	**$ 46,428**	**$ 5,744**	**$ 102,417**	**$ 129,973**	**$ 161,001**	**$ 192,737**	**$ 225,194**	**$ 258,388**	**$ 292,337**	**$ 327,056**	**$ 362,562**
	Plus: Non-Operating Income/(Expense)											
12	Non-Operating Revenue	$ 32,169	$ 32,169	$ 32,169	$ 32,169	$ 32,169	$ 32,169	$ 32,169	$ 32,169	$ 32,169	$ 32,169	$ 32,169
13	Interest Income	35,000	35,000	35,000	35,000	35,000	35,000	35,000	35,000	35,000	35,000	35,000
14	**Equals: Net Income**	**$ 113,597**	**$ 72,913**	**$ 169,586**	**$ 197,142**	**$ 228,170**	**$ 259,906**	**$ 292,363**	**$ 325,557**	**$ 359,506**	**$ 394,225**	**$ 429,731**
	Less: Revenues Excluded From Coverage Test											
15	**Equals: Net Income Available For Debt Service**	**$ 113,597**	**$ 72,913**	**$ 169,586**	**$ 197,142**	**$ 228,170**	**$ 259,906**	**$ 292,363**	**$ 325,557**	**$ 359,506**	**$ 394,225**	**$ 429,731**
	Cash Flow Test											
25	Net Income Available for Loan Repayment	$ 113,597	$ 72,913	$ 169,586	$ 197,142	$ 228,170	$ 259,906	$ 292,363	$ 325,557	$ 359,506	$ 394,225	$ 429,731
26	Net Interfund Transfers (In - Out)	-	-	(10,000)	(10,000)	(10,000)	(10,000)	(10,000)	(10,000)	(10,000)	(10,000)	(10,000)
28	**Net Cash Flow**	**$ 33,029**	**$ (7,655)**	**$ 75,864**	**$ 103,420**	**$ 134,448**	**$ 166,184**	**$ 198,641**	**$ 231,835**	**$ 265,784**	**$ 300,503**	**$ 336,009**
	Unrestricted Reserve Fund Test											
29	Balance At Beginning Of Fiscal Year	$ 413,631	$ 446,660	$ 439,005	$ 514,869	$ 618,289	$ 752,737	$ 918,921	$ 1,117,561	$ 1,349,397	$ 1,615,181	$ 1,915,684
30	Cash Flow Surplus/(Deficit)	33,029	-	75,864	103,420	134,448	166,184	198,641	231,835	265,784	300,503	336,009
31	Reserve Fund Balance Used For Cash Flow Deficit	-	(7,655)	-	-	-	-	-	-	-	-	-
32	**Balance At End Of Fiscal Year**	**$ 446,660**	**$ 439,005**	**$ 514,869**	**$ 618,289**	**$ 752,737**	**$ 918,921**	**$ 1,117,561**	**$ 1,349,397**	**$ 1,615,181**	**$ 1,915,684**	**$ 2,251,693**
33	Minimum Working Capital Reserve Target	221,568	228,241	532,512	539,576	546,120	552,846	559,757	566,860	574,159	581,661	589,370
34	**Excess/(Deficiency) Of Working Capital To Target**	**$ 225,092**	**$ 210,764**	**$ (17,643)**	**$ 78,713**	**$ 206,617**	**$ 366,075**	**$ 557,804**	**$ 782,537**	**$ 1,041,021**	**$ 1,334,023**	**$ 1,662,323**

Appendix I ALTERNATIVE 2B – FINANCIAL ANALYSIS FOR REVENUE FUNDING OF PIPELINE TO TANK

Schedule 1 – Assumptions

Schedule 2 – Budgeted and Projected Cash Inflows

Schedule 3 - Budgeted and Projected Cash Outflows

Schedule 4 – Capital Improvement Plan

Schedule 5 – Debt Repayment Projections

Schedule 6 – Funding Summary

Schedule 7 – Cash Flow Pro Forma

Assumptions

Schedule 1

	FY 2026	FY 2027	FY 2028	FY 2029	FY 2030	FY 2031	FY 2032	FY 2033	FY 2034	FY 2035	FY 2036
Rate Increase Adoption Date	7/1/2025	7/1/2026	7/1/2027	7/1/2028	7/1/2029	7/1/2030	7/1/2031	7/1/2032	7/1/2033	7/1/2034	7/1/2035
Annual Growth											
Water											
Ending # of ACCTS	692	692	692	692	692	692	692	692	692	692	692
Capital Spending											
Annual Capital Budget (Future Year Dollars)	$ -	$ -	$ 1,454,360	$ -	$ -	$ -	$ -	$ -	$ -	$ -	$ -
Annual Percent Executed	100%	100%	100%	100%	100%	100%	100%	100%	100%	100%	100%
Operating Budget Reserve											
Target (Number of Months of Reserve)[1]	3	3	3	3	3	3	3	3	3	3	3
Operating Budget Execution Percentage[2]											
Personal Services	100%	100%	100%	100%	100%	100%	100%	100%	100%	100%	100%
Fixed Operations and Maintenance	100%	100%	100%	100%	100%	100%	100%	100%	100%	100%	100%
Variable Operations and Maintenance	100%	100%	100%	100%	100%	100%	100%	100%	100%	100%	100%

[1]Revenue Fund Operating Budget Reserve balance target assumes Restricted Reserves are not included.

[2]Execution percentages are applied to operating budget categories based on historical actuals compared to budgets.

Projection of Cash Inflows

Schedule 2

		FY 2026	FY 2027	FY 2028	FY 2029	FY 2030	FY 2031	FY 2032	FY 2033	FY 2034	FY 2035	FY 2036
	Assumed Rate Revenue Increases											
1	Assumed Water Rate Increase	0.00%	0.00%	147.00%	2.50%	2.50%	2.50%	2.50%	2.50%	2.50%	2.50%	2.50%
	Water Rate Revenue											
2	Usage Rate Revenue	$ 932,700	$ 932,700	$ 2,303,769	$ 2,361,363	$ 2,420,397	$ 2,480,907	$ 2,542,930	$ 2,606,503	$ 2,671,666	$ 2,738,457	$ 2,806,919
3	**Total Water Rate Revenue**	**$ 932,700**	**$ 932,700**	**$ 2,303,769**	**$ 2,361,363**	**$ 2,420,397**	**$ 2,480,907**	**$ 2,542,930**	**$ 2,606,503**	**$ 2,671,666**	**$ 2,738,457**	**$ 2,806,919**
	Other Operating Revenue											
4	Uncollected Revenue	$ -	$ (13,991)	$ (34,557)	$ (35,420)	$ (36,306)	$ (37,214)	$ (38,144)	$ (39,098)	$ (40,075)	$ (41,077)	$ (42,104)
5	**Total Other Operating Revenue**	**$ -**	**$ (13,991)**	**$ (34,557)**	**$ (35,420)**	**$ (36,306)**	**$ (37,214)**	**$ (38,144)**	**$ (39,098)**	**$ (40,075)**	**$ (41,077)**	**$ (42,104)**
	Non-Operating Revenue											
6	Fire	$ 1,020	$ 1,020	$ 1,020	$ 1,020	$ 1,020	$ 1,020	$ 1,020	$ 1,020	$ 1,020	$ 1,020	$ 1,020
7	Impact Fees	2,500	2,500	2,500	2,500	2,500	2,500	2,500	2,500	2,500	2,500	2,500
8	Customer Late Charges	25,649	25,649	25,649	25,649	25,649	25,649	25,649	25,649	25,649	25,649	25,649
9	Other Service Fees	2,000	2,000	2,000	2,000	2,000	2,000	2,000	2,000	2,000	2,000	2,000
10	Other Income	1,000	1,000	1,000	1,000	1,000	1,000	1,000	1,000	1,000	1,000	1,000
11	**Total Non-Operating Revenue**	**$ 32,169**	**$ 32,169**	**$ 32,169**	**$ 32,169**	**$ 32,169**	**$ 32,169**	**$ 32,169**	**$ 32,169**	**$ 32,169**	**$ 32,169**	**$ 32,169**
	Interest Income											
12	Unrestricted	$ 35,000	$ 35,000	$ 35,000	$ 35,000	$ 35,000	$ 35,000	$ 35,000	$ 35,000	$ 35,000	$ 35,000	$ 35,000
13	**Total Interest Income**	**$ 35,000**	**$ 35,000**	**$ 35,000**	**$ 35,000**	**$ 35,000**	**$ 35,000**	**$ 35,000**	**$ 35,000**	**$ 35,000**	**$ 35,000**	**$ 35,000**
14	**Total Cash Inflows**	**$ 999,869**	**$ 985,879**	**$ 2,336,381**	**$ 2,393,112**	**$ 2,451,260**	**$ 2,510,863**	**$ 2,571,955**	**$ 2,634,575**	**$ 2,698,760**	**$ 2,764,550**	**$ 2,831,984**

Projection of Cash Outflows

Schedule 3

		Escalation Factor	FY 2026	FY 2027	FY 2028	FY 2029	FY 2030	FY 2031	FY 2032	FY 2033	FY 2034	FY 2035	FY 2036
	Personal Services												
1	Salaries	Salaries & Wages	$ 364,274	$ 375,202	$ 386,458	$ 398,052	$ 409,994	$ 422,293	$ 434,962	$ 448,011	$ 461,451	$ 475,295	$ 489,554
2	Payroll Taxes	Default Inflation Factor	29,142	29,871	30,617	31,383	32,167	32,971	33,796	34,641	35,507	36,394	37,304
3	Medical Benefits	Employee Benefits	12,000	12,240	12,485	12,734	12,989	13,249	13,514	13,784	14,060	14,341	14,628
4	Worker's Comp.	Default Inflation Factor	21,856	22,402	22,962	23,537	24,125	24,728	25,346	25,980	26,629	27,295	27,978
5	**Total Personal Services**		**$ 427,272**	**$ 439,715**	**$ 452,523**	**$ 465,706**	**$ 479,275**	**$ 493,242**	**$ 507,618**	**$ 522,416**	**$ 537,647**	**$ 553,326**	**$ 569,463**
	Fixed O&M												
6	Infrastructure Repairs	Repair & Maintenance	$ 40,000	$ 40,800	$ 41,616	$ 42,448	$ 43,297	$ 44,163	$ 45,046	$ 45,947	$ 46,866	$ 47,804	$ 48,760
7	Maintenance Supplies	Default Inflation Factor	10,000	10,250	10,506	10,769	11,038	11,314	11,597	11,887	12,184	12,489	12,801
8	Water Samples & Reporting	Default Inflation Factor	16,000	16,400	16,810	17,230	17,661	18,103	18,555	19,019	19,494	19,982	20,481
9	Chlorination	Default Inflation Factor	10,000	10,250	-	-	-	-	-	-	-	-	-
10	Engineer & Professional Services	Default Inflation Factor	32,000	32,800	33,620	34,461	35,322	36,205	37,110	38,038	38,989	39,964	40,963
11	Office & General Supplies	Default Inflation Factor	7,000	7,175	7,354	7,538	7,727	7,920	8,118	8,321	8,529	8,742	8,961
12	Telephone System	Default Inflation Factor	22,700	23,268	23,849	24,445	25,057	25,683	26,325	26,983	27,658	28,349	29,058
13	Postage	Default Inflation Factor	12,000	12,300	12,608	12,923	13,246	13,577	13,916	14,264	14,621	14,986	15,361
14	Service Fees	Default Inflation Factor	5,600	5,740	5,884	6,031	6,181	6,336	6,494	6,657	6,823	6,994	7,168
15	Printing	Default Inflation Factor	500	513	525	538	552	566	580	594	609	624	640
16	Alarm System	Default Inflation Factor	1,600	1,640	1,681	1,723	1,766	1,810	1,856	1,902	1,949	1,998	2,048
17	Information Technology	Default Inflation Factor	5,600	5,740	5,884	6,031	6,181	6,336	6,494	6,657	6,823	6,994	7,168
18	Annual Meeting Expense	Default Inflation Factor	4,200	4,305	4,413	4,523	4,636	4,752	4,871	4,992	5,117	5,245	5,376
19	Conferences & Meetings	Default Inflation Factor	12,000	12,300	12,608	12,923	13,246	13,577	13,916	14,264	14,621	14,986	15,361
20	Professional Training & Certification	Default Inflation Factor	500	513	525	538	552	566	580	594	609	624	640
21	Insurance	Default Inflation Factor	16,000	16,400	16,810	17,230	17,661	18,103	18,555	19,019	19,494	19,982	20,481
22	Auto & Travel	Default Inflation Factor	3,500	3,588	3,677	3,769	3,863	3,960	4,059	4,160	4,264	4,371	4,480
23	Website Maintenance	Default Inflation Factor	3,500	3,588	3,677	3,769	3,863	3,960	4,059	4,160	4,264	4,371	4,480
24	Property Taxes	Default Inflation Factor	2,000	2,050	2,101	2,154	2,208	2,263	2,319	2,377	2,437	2,498	2,560
25	Taxes/License/Professional Dues	Default Inflation Factor	8,000	8,200	8,405	8,615	8,831	9,051	9,278	9,509	9,747	9,991	10,241
26	Professional Services	Default Inflation Factor	8,000	8,200	8,405	8,615	8,831	9,051	9,278	9,509	9,747	9,991	10,241
27	Legal	Default Inflation Factor	125,000	128,125	131,328	134,611	137,977	141,426	144,962	148,586	152,300	156,108	160,011
28	Accounting & Review	Default Inflation Factor	18,000	18,450	18,911	19,384	19,869	20,365	20,874	21,396	21,931	22,480	23,042
29	Grounds & Bldg Maintenance	Default Inflation Factor	10,000	10,250	10,506	10,769	11,038	11,314	11,597	11,887	12,184	12,489	12,801
30	Staff Appreciation	Default Inflation Factor	300	308	315	323	331	339	348	357	366	375	384
31	Purchased Water from City of East Palo Alto[1]		-	-	1,200,000	1,200,000	1,200,000	1,200,000	1,200,000	1,200,000	1,200,000	1,200,000	1,200,000
32	**Total Fixed O&M**		**$ 374,000**	**$ 383,150**	**$ 1,582,019**	**$ 1,591,361**	**$ 1,600,933**	**$ 1,610,739**	**$ 1,620,787**	**$ 1,631,082**	**$ 1,641,629**	**$ 1,652,435**	**$ 1,663,507**
	Variable O&M												
33	PG&E	Fuel, Utilities, Chemicals	$ 85,000	$ 90,100	$ 95,506	$ 101,236	$ 104,273	$ 107,402	$ 110,624	$ 113,942	$ 117,361	$ 120,882	$ 124,508

Projection of Cash Outflows **Schedule 3**

	Escalation Factor	FY 2026	FY 2027	FY 2028	FY 2029	FY 2030	FY 2031	FY 2032	FY 2033	FY 2034	FY 2035	FY 2036
34	**Total Variable O&M**	**$ 85,000**	**$ 90,100**	**$ 95,506**	**$ 101,236**	**$ 104,273**	**$ 107,402**	**$ 110,624**	**$ 113,942**	**$ 117,361**	**$ 120,882**	**$ 124,508**
	Total Expenses by Category											
35	Personal Services	$ 427,272	$ 439,715	$ 452,523	$ 465,706	$ 479,275	$ 493,242	$ 507,618	$ 522,416	$ 537,647	$ 553,326	$ 569,463
36	Fixed Operations & Maintenance	374,000	383,150	1,582,019	1,591,361	1,600,933	1,610,739	1,620,787	1,631,082	1,641,629	1,652,435	1,663,507
37	Variable Operations & Maintenance	85,000	90,100	95,506	101,236	104,273	107,402	110,624	113,942	117,361	120,882	124,508
38	**Total Expenses**	$ 886,272	$ 912,965	$ 2,130,047	$ 2,158,303	$ 2,184,481	$ 2,211,383	$ 2,239,029	$ 2,267,440	$ 2,296,637	$ 2,326,642	$ 2,357,479
	Expense Execustion Factors											
39	Personal Services	100%	100%	100%	100%	100%	100%	100%	100%	100%	100%	100%
40	Fixed Operations & Maintenance	100%	100%	100%	100%	100%	100%	100%	100%	100%	100%	100%
41	Variable Operations & Maintenance	100%	100%	100%	100%	100%	100%	100%	100%	100%	100%	100%
	Total Expenses at Execution											
42	Personal Services	$ 427,272	$ 439,715	$ 452,523	$ 465,706	$ 479,275	$ 493,242	$ 507,618	$ 522,416	$ 537,647	$ 553,326	$ 569,463
43	Fixed Operations & Maintenance	374,000	383,150	1,582,019	1,591,361	1,600,933	1,610,739	1,620,787	1,631,082	1,641,629	1,652,435	1,663,507
44	Variable Operations & Maintenance	85,000	90,100	95,506	101,236	104,273	107,402	110,624	113,942	117,361	120,882	124,508
45	**Total Expenses at Execution**	**$ 886,272**	**$ 912,965**	**$ 2,130,047**	**$ 2,158,303**	**$ 2,184,481**	**$ 2,211,383**	**$ 2,239,029**	**$ 2,267,440**	**$ 2,296,637**	**$ 2,326,642**	**$ 2,357,479**
	Transfers Out											
46	Capital Reserve	$ -	$ -	$ 10,000	$ 10,000	$ 10,000	$ 10,000	$ 10,000	$ 10,000	$ 10,000	$ 10,000	$ 10,000
47	**Total Transfers Out**	**$ -**	**$ -**	**$ 10,000**	**$ 10,000**	**$ 10,000**	**$ 10,000**	**$ 10,000**	**$ 10,000**	**$ 10,000**	**$ 10,000**	**$ 10,000**
	Debt Service											
48	Existing Debt	$ 80,568	$ 80,568	$ 80,568	$ 80,568	$ 80,568	$ 80,568	$ 80,568	$ 80,568	$ 80,568	$ 80,568	$ 80,568
49	**Total Debt Service**	**$ 80,568**	**$ 80,568**	**$ 80,568**	**$ 80,568**	**$ 80,568**	**$ 80,568**	**$ 80,568**	**$ 80,568**	**$ 80,568**	**$ 80,568**	**$ 80,568**
50	**Total Cash Outflows**	**$ 966,840**	**$ 993,533**	**$ 2,220,615**	**$ 2,248,871**	**$ 2,275,049**	**$ 2,301,951**	**$ 2,329,597**	**$ 2,358,008**	**$ 2,387,205**	**$ 2,417,210**	**$ 2,448,047**

1 Amount will be based on a contract, so no escalation factor was applied.

Capital Improvement Program **Schedule 4**

		FY 2026	FY 2027	FY 2028	FY 2029	FY 2030	FY 2031	FY 2032	FY 2033	FY 2034	FY 2035	FY 2036
1	Pipeline to Tank	$ -	$ -	$ 1,412,000	$ -	$ -	$ -	$ -	$ -	$ -	$ -	$ -
2	**Total CIP Budget (in current dollars)**	**$ -**	**$ -**	**$ 1,412,000**	**$ -**	**$ -**	**$ -**	**$ -**	**$ -**	**$ -**	**$ -**	**$ -**
3	Cumulative Projected Cost Escalation[1]	0.0%	0.0%	3.0%	6.1%	9.3%	12.6%	15.9%	19.4%	23.0%	26.7%	30.5%
4	**Resulting CIP Funding Level**	**$ -**	**$ -**	**$ 1,454,360**	**$ -**	**$ -**	**$ -**	**$ -**	**$ -**	**$ -**	**$ -**	**$ -**
5	Annual CIP Execution Percentage	100%	100%	100%	100%	100%	100%	100%	100%	100%	100%	100%
6	**Final CIP Funding Level**	**$ -**	**$ -**	**$ 1,454,360**	**$ -**	**$ -**	**$ -**	**$ -**	**$ -**	**$ -**	**$ -**	**$ -**

[1] CIP Escalation factors are consistent with the Engineering News Record Construction Cost Index.

Debt Repayment Projections

Schedule 5

	FY 2026	FY 2027	FY 2028	FY 2029	FY 2030	FY 2031	FY 2032	FY 2033	FY 2034	FY 2035	FY 2036
Prior Loans											
SBA Loan	$ 80,568	$ 80,568	$ 80,568	$ 80,568	$ 80,568	$ 80,568	$ 80,568	$ 80,568	$ 80,568	$ 80,568	$ 80,568
Total Loan Repayment	**$ 80,568**	**$ 80,568**	**$ 80,568**	**$ 80,568**	**$ 80,568**	**$ 80,568**	**$ 80,568**	**$ 80,568**	**$ 80,568**	**$ 80,568**	**$ 80,568**

Funding Summary by Fund

Schedule 6

	FY 2026	FY 2027	FY 2028	FY 2029	FY 2030	FY 2031	FY 2032	FY 2033	FY 2034	FY 2035	FY 2036
Capital Reserve Fund											
Balance At Beginning Of Fiscal Year	$ -	$ -	$ 1,400,000	$ -	$ 10,000	$ 20,000	$ 30,000	$ 40,000	$ 50,000	$ 60,000	$ 70,000
Annual Revenues	-	1,400,000	10,000	10,000	10,000	10,000	10,000	10,000	10,000	10,000	10,000
Less: Annual Expenses	-	-	-	-	-	-	-	-	-	-	-
Less: Payment Of Debt Service	-	-	-	-	-	-	-	-	-	-	-
Subtotal	$ -	$ 1,400,000	$ 1,410,000	$ 10,000	$ 20,000	$ 30,000	$ 40,000	$ 50,000	$ 60,000	$ 70,000	$ 80,000
Less: Restricted Funds	-	-	-	-	-	-	-	-	-	-	-
Total Amount Available For Projects	$ -	$ 1,400,000	$ 1,410,000	$ 10,000	$ 20,000	$ 30,000	$ 40,000	$ 50,000	$ 60,000	$ 70,000	$ 80,000
Amount Paid For Projects	-	-	(1,410,000)	-	-	-	-	-	-	-	-
Subtotal	$ -	$ 1,400,000	$ -	$ 10,000	$ 20,000	$ 30,000	$ 40,000	$ 50,000	$ 60,000	$ 70,000	$ 80,000
Add Back: Restricted Funds	-	-	-	-	-	-	-	-	-	-	-
Plus: Interest Earnings	-	1,750	3,500	38	150	313	438	563	688	813	938
Less: Interest Allocated To Cash Flow	-	(1,750)	(3,500)	(38)	(150)	(313)	(438)	(563)	(688)	(813)	(938)
Balance At End Of Fiscal Year	**$ -**	**$ 1,400,000**	**$ -**	**$ 10,000**	**$ 20,000**	**$ 30,000**	**$ 40,000**	**$ 50,000**	**$ 60,000**	**$ 70,000**	**$ 80,000**
Revenue Fund											
Balance At Beginning Of Fiscal Year	$ 413,631	$ 446,660	$ 439,005	$ 510,411	$ 654,652	$ 830,863	$ 1,039,775	$ 1,282,133	$ 1,558,700	$ 1,870,254	$ 2,217,593
Net Cash Flow	33,029	(7,655)	115,766	144,241	176,211	208,912	242,358	276,567	311,555	347,339	383,937
Less: Cash-Funded Capital Projects	-	-	(44,360)	-	-	-	-	-	-	-	-
Less: Payment Of Loan	-	-	-	-	-	-	-	-	-	-	-
Subtotal	$ 446,660	$ 439,005	$ 510,411	$ 654,652	$ 830,863	$ 1,039,775	$ 1,282,133	$ 1,558,700	$ 1,870,254	$ 2,217,593	$ 2,601,531
Less: Restricted Funds	(221,568)	(228,241)	(510,411)	(539,576)	(546,120)	(552,846)	(559,757)	(566,860)	(574,159)	(581,661)	(589,370)
Total Amount Available For Projects	225,092	210,764	-	115,076	284,743	486,929	722,376	991,840	1,296,095	1,635,933	2,012,161
Amount Paid For Projects	-	-	-	-	-	-	-	-	-	-	-
Subtotal	$ 225,092	$ 210,764	$ -	$ 115,076	$ 284,743	$ 486,929	$ 722,376	$ 991,840	$ 1,296,095	$ 1,635,933	$ 2,012,161
Add Back: Restricted Funds	221,568	228,241	510,411	539,576	546,120	552,846	559,757	566,860	574,159	581,661	589,370
Plus: Interest Earnings	1,075	1,107	2,374	4,369	7,428	11,691	14,512	17,755	21,431	25,549	30,120
Less: Interest Allocated To Cash Flow	(1,075)	(1,107)	(2,374)	(4,369)	(7,428)	(11,691)	(14,512)	(17,755)	(21,431)	(25,549)	(30,120)
Balance At End Of Fiscal Year	**$ 446,660**	**$ 439,005**	**$ 510,411**	**$ 654,652**	**$ 830,863**	**$ 1,039,775**	**$ 1,282,133**	**$ 1,558,700**	**$ 1,870,254**	**$ 2,217,593**	**$ 2,601,531**

Pro Forma **Schedule 7**

		FY 2026	FY 2027	FY 2028	FY 2029	FY 2030	FY 2031	FY 2032	FY 2033	FY 2034	FY 2035	FY 2036
	Operating Revenue											
1	Water Rate Revenue	$ 932,700	$ 932,700	$ 932,700	$ 2,303,769	$ 2,361,363	$ 2,420,397	$ 2,480,907	$ 2,542,930	$ 2,606,503	$ 2,671,666	$ 2,738,457
2	Subtotal	$ 932,700	$ 932,700	$ 932,700	$ 2,303,769	$ 2,361,363	$ 2,420,397	$ 2,480,907	$ 2,542,930	$ 2,606,503	$ 2,671,666	$ 2,738,457
3	*Weighted Average Rate Increase*	*0.00%*	*0.00%*	*147.00%*	*2.50%*	*2.50%*	*2.50%*	*2.50%*	*2.50%*	*2.50%*	*2.50%*	*2.50%*
4	Additional Rate Revenue From Rate Increase	-	-	1,371,069	57,594	59,034	60,510	62,023	63,573	65,163	66,792	68,461
5	Total Rate Revenue	$ 932,700	$ 932,700	$ 2,303,769	$ 2,361,363	$ 2,420,397	$ 2,480,907	$ 2,542,930	$ 2,606,503	$ 2,671,666	$ 2,738,457	$ 2,806,919
6	Plus: Other Operating Revenue	-	(13,991)	(34,557)	(35,420)	(36,306)	(37,214)	(38,144)	(39,098)	(40,075)	(41,077)	(42,104)
7	**Equals: Total Operating Revenue**	**$ 932,700**	**$ 918,710**	**$ 2,269,212**	**$ 2,325,943**	**$ 2,384,091**	**$ 2,443,694**	**$ 2,504,786**	**$ 2,567,406**	**$ 2,631,591**	**$ 2,697,381**	**$ 2,764,815**
	Less: Operating Expenses											
8	Personal Services	$ (427,272)	$ (439,715)	$ (452,523)	$ (465,706)	$ (479,275)	$ (493,242)	$ (507,618)	$ (522,416)	$ (537,647)	$ (553,326)	$ (569,463)
9	Variable Operations & Maintenance Costs	(85,000)	(90,100)	(95,506)	(101,236)	(104,273)	(107,402)	(110,624)	(113,942)	(117,361)	(120,882)	(124,508)
10	Operations & Maintenance Costs	(374,000)	(383,150)	(1,582,019)	(1,591,361)	(1,600,933)	(1,610,739)	(1,620,787)	(1,631,082)	(1,641,629)	(1,652,435)	(1,663,507)
11	**Equals: Net Operating Income**	**$ 46,428**	**$ 5,744**	**$ 139,165**	**$ 167,640**	**$ 199,610**	**$ 232,311**	**$ 265,757**	**$ 299,966**	**$ 334,954**	**$ 370,738**	**$ 407,336**
	Plus: Non-Operating Income/(Expense)											
12	Non-Operating Revenue	$ 32,169	$ 32,169	$ 32,169	$ 32,169	$ 32,169	$ 32,169	$ 32,169	$ 32,169	$ 32,169	$ 32,169	$ 32,169
13	Interest Income	35,000	35,000	35,000	35,000	35,000	35,000	35,000	35,000	35,000	35,000	35,000
14	**Equals: Net Income**	**$ 113,597**	**$ 72,913**	**$ 206,334**	**$ 234,809**	**$ 266,779**	**$ 299,480**	**$ 332,926**	**$ 367,135**	**$ 402,123**	**$ 437,907**	**$ 474,505**
	Less: Revenues Excluded From Coverage Test											
15	**Equals: Net Income Available For Debt Service**	**$ 113,597**	**$ 72,913**	**$ 206,334**	**$ 234,809**	**$ 266,779**	**$ 299,480**	**$ 332,926**	**$ 367,135**	**$ 402,123**	**$ 437,907**	**$ 474,505**
	Cash Flow Test											
24	Net Income Available for Loan Repayment	$ 113,597	$ 72,913	$ 206,334	$ 234,809	$ 266,779	$ 299,480	$ 332,926	$ 367,135	$ 402,123	$ 437,907	$ 474,505
25	Net Interfund Transfers (In - Out)	-	-	(10,000)	(10,000)	(10,000)	(10,000)	(10,000)	(10,000)	(10,000)	(10,000)	(10,000)
27	**Net Cash Flow**	**$ 33,029**	**$ (7,655)**	**$ 115,766**	**$ 144,241**	**$ 176,211**	**$ 208,912**	**$ 242,358**	**$ 276,567**	**$ 311,555**	**$ 347,339**	**$ 383,937**
	Unrestricted Reserve Fund Test											
28	Balance At Beginning Of Fiscal Year	$ 413,631	$ 446,660	$ 439,005	$ 510,411	$ 654,652	$ 830,863	$ 1,039,775	$ 1,282,133	$ 1,558,700	$ 1,870,254	$ 2,217,593
29	Cash Flow Surplus/(Deficit)	33,029	-	115,766	144,241	176,211	208,912	242,358	276,567	311,555	347,339	383,937
30	Reserve Fund Balance Used For Cash Flow Deficit	-	(7,655)	-	-	-	-	-	-	-	-	-
32	**Balance At End Of Fiscal Year**	**$ 446,660**	**$ 439,005**	**$ 510,411**	**$ 654,652**	**$ 830,863**	**$ 1,039,775**	**$ 1,282,133**	**$ 1,558,700**	**$ 1,870,254**	**$ 2,217,593**	**$ 2,601,531**
33	Minimum Working Capital Reserve Target	221,568	228,241	532,512	539,576	546,120	552,846	559,757	566,860	574,159	581,661	589,370
34	**Excess/(Deficiency) Of Working Capital To Target**	**$ 225,092**	**$ 210,764**	**$ (22,100)**	**$ 115,076**	**$ 284,743**	**$ 486,929**	**$ 722,376**	**$ 991,840**	**$ 1,296,095**	**$ 1,635,933**	**$ 2,012,161**