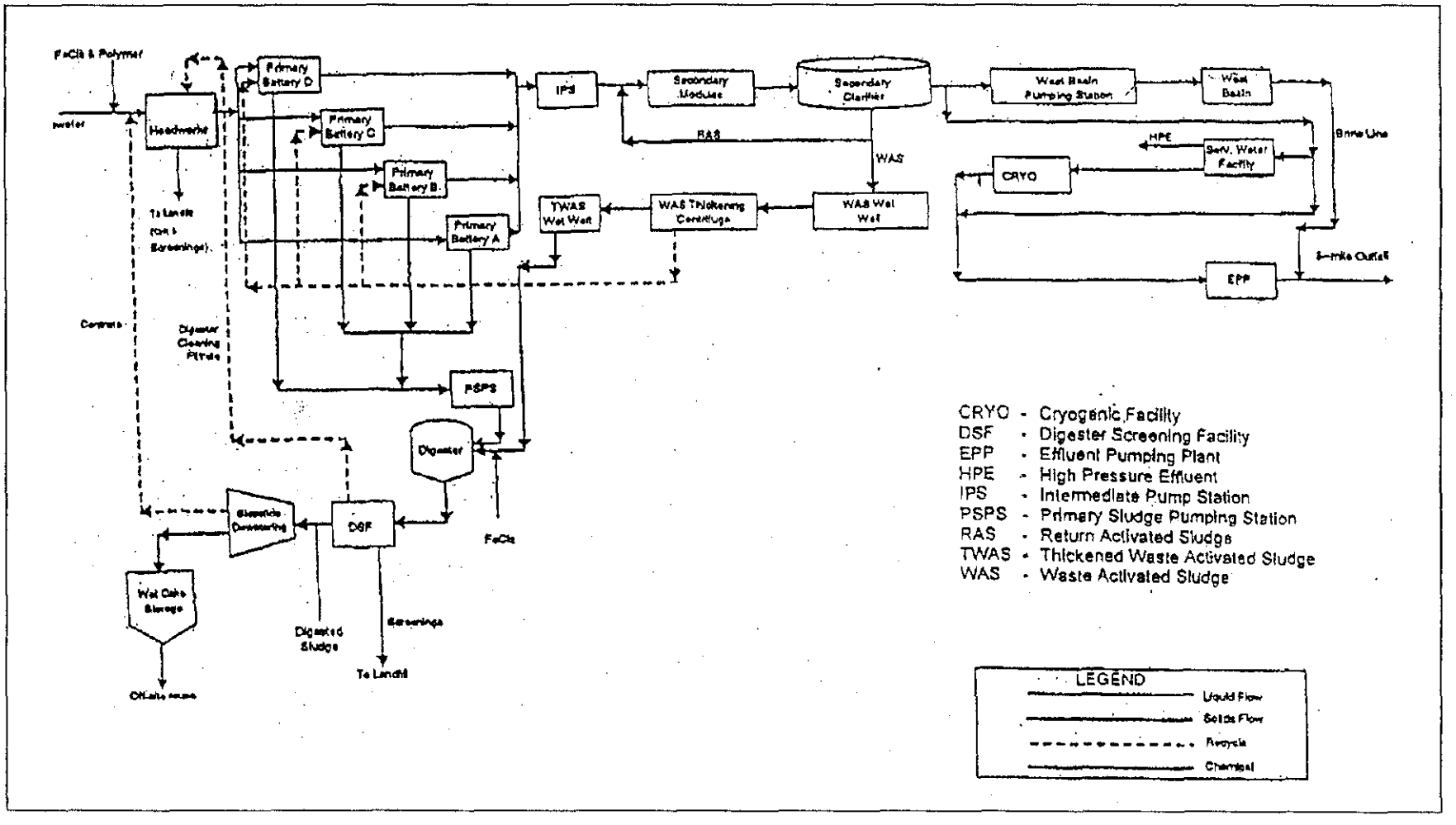

Figure P3 – Schematic of Wastewater Flow at Hyperion Treatment Plant