STATE OF CALIFORNIA
CALIFORNIA REGIONAL WATER QUALITY CONTROL BOARD
LOS ANGELES REGION

ORDER NO. R4-2007-0061

RENEWAL OF WASTE DISCHARGE REQUIREMENTS FOR CITY OF SAN BUENAVENTURA (VENTURA KEYS MAINTENANCE DREDGING) (FILE NO. 97-127)

The California Regional Water Quality Control Board, Los Angeles Region (Regional Board) finds:

1. The City of San Buenaventura (the City) has filed an application for renewal of the Waste Discharge Requirements contained in Regional Board Order No. 97-141, adopted on December 8, 1997, for routine maintenance dredging operations within the Ventura Keys, a waterfront residential community adjacent to Ventura Harbor in the City and County of Ventura (Plate 1).

2. The Ventura Keys waterways encompass an area of 32 acres and consist of three channels tending in a general north-south alignment (Channels 1, 2 and 3) and a larger connecting channel to the south that interconnects the other three channels and provides a link to Ventura Harbor (Plate 2). The 13.5 acres of actual channels have existing depths between -9 and -16 Mean Lower Low Water (MLLW). Shoaling in the Ventura Keys results from accumulation of sediments transported into the area by the Arundell Barranca and 26 smaller storm drains.

   Order No. 97-141 authorized the City to dredge up to 100,000 cubic yards of bottom sediments per year from the navigation channels, and no more than 350,000 cubic yards over a ten-year period. The most recent maintenance dredging operation was completed in 2005-6 and involved the removal of nearly 46,000 cubic yards of material from the Connecting Channel, with deposition in the surf zone to the north of the mouth of the Santa Clara River. In the 1997-1999 period, nearly 204,000 cubic yards of material was removed from the Connecting Channel and Channels 1, 2 and 3, with deposition in the surf zone at both the mouth of the river and in Cell 1 of the Pierpont Groin Field (nearshore coastal waters north of Marina Park). Approval for disposal within the surf zone near the mouth of the Santa Clara River was contingent upon the river flowing at a rate of 100 cubic feet per second or greater.

3. The City estimates that approximately 175,000 cubic yards of material could accumulate in the Ventura Keys over the next five years and require removal via maintenance dredging (Plate 3). Consequently, the City proposes to dredge and dispose of an average of 35,000 cubic yards of sediment per year over the next five years. However, to provide operational flexibility, the City proposes to dredge up to a maximum volume of 100,000 cubic yards in any one calendar year (the cumulative total dredged over a 5-year period would not exceed 175,000 cubic yards).

The connecting channel presently contains approximately 22,000 cubic yards of shoal material and is expected to require dredging two or three times over the next ten years. It is anticipated that the dredging would be accomplished with a hydraulic pipeline dredge and would require 10 to 30 days to complete each dredging operation. It is likely that the portion of the connecting channel in the vicinity of the mouth of the Arundell Barranca would require more frequent dredging, which probably would be accomplished with a mechanical clamshell dredge. Channels 1, 2 and 3 presently contain approximately 30,000 cubic yards of shoal material and are expected to require dredging one or two times over the next ten years. It is anticipated that the dredging would be accomplished with a hydraulic pipeline dredge and would require 30 to 60 days to complete each dredging operation.

The City proposes to dispose of the dredged material in the surf zone at Cell 1 of the Pierpont Bay Groin Field (the first cell north of Marina Park) or the surf zone at the mouth of the Santa Clara River or the nearshore waters at the mouth of the Santa Clara River (Plates 4, 5, 6 and 7). Dredged material disposed of into Cell 1 of the Pierpont Bay Groin Field would be composed of sediment that contains 65% or more coarse-grained material (i.e., retained on a number 200 sieve). This material would contribute to beach replenishment at a nearby sand-depleted beach. Dredged material disposed of into the surf zone or nearshore waters at the mouth of the Santa Clara River would be composed of sediment that contains 25% or more coarse-grained material. This material would be rapidly dispersed by the currents and the river discharge flow and some fraction would contribute to beach replenishment.

If surf zone deposition is employed, a discharge pipe would extend from the dredge site through the harbor waters with a combination of floating and submerged pipe and along the beach seaward of the existing sand dunes to either Cell 1 of the Pierpont Groin Field or to the mouth of the Santa Clara River. If nearshore deposition is employed, the dredged material would be barged to the area just south of the mouth of the Santa Clara River and deposited in waters no deeper than -30 feet MLLW. The dredging and disposal operations would not commence until after Labor Day in September of a given year and would cease on or before March 15th of the following year, so as to avoid impacts to grunion spawning, least tern and snowy plover nesting, and recreational use of the beach.

4. The City and its consulting firm, Applied Environmental Technologies, Inc., conducted sampling of sediments at four locations within the Ventura Keys in July 2005. The four core samples were combined into a single composite for analysis (Table 1). Sediment samples also were collected at several locations within the Ventura Keys in 1997. Composite samples were analyzed separately for the Connecting Channel, Channel 1, Channel 2 and Channel 3 (ranges of values shown in Table 1).

Table 1. Sediment characterization results for the Ventura Keys.

Constituent	1997 Sediment Sampling	2005 Sediment Sampling
Arsenic	Not detected	1.33 mg/kg
Cadmium	0.22-0.36 mg/kg	0.23 mg/kg
Chromium	4.13-6.84 mg/kg	11.5 mg/kg
Copper	9.86-20.7 mg/kg	17.1 mg/kg
Lead	5.77-11.5 mg/kg	6.64 mg/kg
Mercury	Not detected-0.04 mg/kg	<0.02 mg/kg
Nickel	7.92-11.5 mg/kg	22.2 mg/kg
Zinc	25.3-45.6 mg/kg	54.6 mg/kg
Selenium	Not analyzed	<0.10 mg/kg
Aldrin	Not detected	<0.23 µg/kg
Chlordane	Not detected	<0.20 µg/kg
4,4'-DDD	Not detected	0.81 µg/kg
4,4'-DDE	Not detected	1.38 µg/kg
4,4'-DDT	Not detected	<0.22 µg/kg
Dieldrin	Not detected	<0.20 µg/kg
Toxaphene	Not detected	<17 µg/kg
Total PCBs	Not detected	<4.2 µg/kg
Total PAHs	Not detected	<100 µg/kg

The State has not yet promulgated sediment quality objectives for the constituents listed in Table 1. However, the concentrations measured are below the levels at which biological effects would be expected to occur.

5. The City plans to conduct sediment characterization tests (e.g., grain size and sediment chemistry analyses) again in 2008 and at least once every three years in subsequent years to confirm that the material to be dredged would be suitable for disposal as proposed.

6. The United States Corps of Engineers has issued a public notice to renew the Individual Permit for Maintenance Dredging of the Ventura Keys (Application No. 2007-872-PHT). The existing permit (97-50041-TW) will expire on December 15, 2007 and it is anticipated that the United States Corps of Engineers will renew the permit in a timely manner.

7. On August 31, 2007, the City of Ventura issued an Addendum to the previously approved Final Mitigated Negative Declaration (FMND-2202), which confirms that since the circulation of the FMND in 1997, there have been no new or substantially more severe environmental impacts related to the project, no significant changes in the project or the surrounding circumstances, nor significant new information that has since come to light that would require a revision of the conclusions in the FMND or recirculation of the document. The Addendum concludes that the current request is consistent with the project as approved with the FMND.

The Addendum requires adherence to the following mitigation measures: 1) in order to mitigate potential significant impacts related to Water Resources, disposal of spoils in either the surf zone or near shore area at the mouth of the Santa Clara River shall not occur unless that water is flowing at 100 cubic feet per second or greater; 2) in order to mitigate potential impacts related to water quality, periodic testing of the water shall occur during the dredge operation per standards set forth by the Regional Water Quality Control Board; if quality drops below accepted standards, dredging shall stop until impact is eliminated; 3) in order to mitigate potential significant impacts related to Water Resources, the contractor shall be required to implement the Best Management Practices as established by the National Discharge System Permit and/or as required by the Regional Water Quality Control Board, as appropriate to prohibit entry of pollutants to the storm water runoff.

8. The Regional Board adopted a revised Water Quality Control Plan for the Coastal Watersheds of Los Angeles and Ventura Counties on June 13, 1994. The Water Quality Control Plan contains water quality objectives for the Ventura Keys and the Ventura County coastal nearshore and offshore waters. The requirements contained in this Order as they are met will be in conformance with the goals of the Water Quality Control Plan.

9. The beneficial uses of the Ventura Keys waters are: navigation, water contact recreation, non-contact water recreation, commercial and sport fishing, marine habitat, and wildlife habitat. The beneficial uses of the Ventura County coastal nearshore and offshore waters are: industrial service supply, navigation, water contact recreation, non-contact water recreation, commercial and sport fishing, marine habitat, wildlife habitat, preservation of rare and endangered species, migration of aquatic organisms, spawning, reproduction and/or early development of aquatic organisms, and shellfish harvesting.

10. With proper management of the dredging and disposal operations, the project is not expected to release significant levels of contaminants to the Harbor waters or other State waters nor adversely impact beneficial uses.

11. Dredging and disposal operations will be accomplished through the use of temporary equipment. The Waste Discharge Requirements imposed below will not result in any significant increase in energy consumption.

The Regional Board has notified the City and interested agencies and persons of its intent to prescribe Waste Discharge Requirements for this discharge and has provided them with an opportunity to submit their written views and recommendations.

The Regional Board, in a public meeting, heard and considered all comments pertaining to the discharge and to the tentative requirements.

IT IS HEREBY ORDERED that the City of San Buenaventura, in order to meet the provisions contained in Division 7 of the California Water Code and regulations adopted thereunder, and the provisions of the Clean Water Act as amended, and regulations and guidelines adopted thereunder, shall comply with the following:

A. Discharge Requirements

1. The removal and placement of dredged/excavated material shall be managed such that the concentrations of toxic pollutants in the water column, sediments or biota shall not adversely affect beneficial uses, in particular those identified in Finding number 9 above.

2. Marine and enclosed bay and estuarine communities and populations, including vertebrate, invertebrate and plant species, shall not be degraded as a result of the discharge of waste.

3. The natural taste and odor of fish, shellfish or other marine and enclosed bay and estuarine resources used for human consumption shall not be impaired as a result of the discharge of waste.

4. Toxic pollutants shall not be discharged at levels that will bioaccumulate in aquatic resources to levels which are harmful to human health.

5. There shall be no acute toxicity or chronic toxicity in ambient waters as a result of the discharge of waste.

6. The City shall conduct the monitoring required and comply with the reporting requirements outlined in the attached Monitoring and Reporting Program, which is incorporated by reference as part of these Waste Discharge Requirements.

7. Dredging, excavation or disposal of dredge spoils shall not cause any of the following conditions in the receiving waters:

    a. The formation of sludge banks or deposits of waste origin that would adversely affect the composition of the bottom fauna and flora, interfere with the fish propagation or deleteriously affect their habitat, or adversely change the physical or chemical nature of the bottom.

    b. Turbidity that would cause substantial visible contrast with the natural appearance of the water outside the immediate area of operation.

    c. Discoloration outside the immediate area of operation.

    d. Visible material, including oil and grease, either floating on or suspended in the water or deposited on beaches, shores, or channel structures outside the immediate area of operation.

    e. Objectionable odors emanating from the water surface.

f. Depression of dissolved oxygen concentrations below 5.0 milligrams per liter at any time outside the immediate area of operation.

g. Any condition of pollution or nuisance.

B. Provisions

1. The Discharge Requirements specified above are valid only for dredging and disposal of a maximum volume of 100,000 cubic yards of sediment per year, provided that the average volume does not exceed 35,000 cubic yards of sediment over the five-year period, as proposed by the City. Dredging and disposal operations shall not commence until after Labor Day in September of a given year and shall cease on or before March 15th of the following year.

2. The City may dispose of dredged material for beach replenishment purposes into Cell 1 of the Pierpont Bay Groin Field provided that the material is composed of sediment that contains 65% or more coarse-grained material (i.e., retained on a number 200 sieve) and the dredged material does not contain elevated concentrations of trace metals or trace organics.

3. The City may dispose of dredged material in the surf zone or nearshore waters within 200 feet of the mouth of the Santa Clara River provided that the river is flowing at a rate of 100 cubic feet per second or greater and the dredged material does not contain elevated concentrations of trace metals or trace organics.

4. The City shall conduct a sediment characterization study to assess trace metal and trace organic concentrations within the Ventura Keys in 2008 and 2011, at a minimum. In addition, sediment toxicity testing and benthic infaunal community analysis shall be included at representative locations to allow evaluation of the condition of surficial sediments.

5. The City shall notify this Regional Board immediately by telephone of any adverse conditions in receiving waters or adjacent areas resulting from the removal of dredge materials; written confirmation by the Port to the Regional Board shall follow within one week.

6. A copy of this Order shall be made available at all times to project construction personnel.

7. The City shall provide the following information to the Regional Board:

   a. The scheduled date of commencement of each dredging operation and an engineering plan and profile of the excavation and the disposal site at least two weeks prior to commencement.

b. Notice of termination of the operation, within one week following the termination date.

8. The City shall submit, under penalty of perjury, technical reports to the Regional Board in accordance with specifications prepared by the Executive Officer.

9. In accordance with section 13260(c) of the Water Code, the City shall file a report of any material change or proposed change in the character, location, or volume of the waste.

10. These requirements do not exempt the City from compliance with any other laws, regulations, or ordinances which may be applicable: they do not legalize this waste discharge, and they leave unaffected any further restraint on the disposal of wastes at this site which may be contained in other statutes or required by other agencies.

11. In accordance with Water Code section 13263(g), these requirements shall not create a vested right to continue to discharge and are subject to rescission or modification. All discharges of waste into waters of the State are privileges, not rights.

12. This Order includes Attachment N: "Standard Provisions, General Monitoring and Reporting Requirements" ("Standard Provisions") and the attached Monitoring and Reporting Requirements, both of which are incorporated herein by reference. If there is any conflict between provisions stated hereinbefore and said "Standard Provisions", those provisions stated hereinbefore prevail. If there is any conflict between requirements stated in the attached Monitoring and Reporting Program and said "Standard Provisions", the former shall prevail.

13. This Order fulfills the requirements for a Clean Water Act Section 401 Water Quality Certification for the proposed project. Pursuant to section 3860 of title 23 of the California Code of Regulations (23 CCR), the following three standard conditions shall apply to this project:

    a. this certification action is subject to modification or revocation upon administrative or judicial review, including review and amendment pursuant to section 13330 of the California Water Code and Article 6 (commencing with 23 CCR section 3867);

b. this certification action is not intended and shall not be construed to apply to any activity involving a hydroelectric facility and requiring a Federal Energy Regulatory Commission (FERC) license or an amendment to a FERC license unless the pertinent certification application was filed pursuant to 23 CCR subsection 3855(b) and the application specifically identified that a FERC license or amendment to a FERC license for a hydroelectric facility was being sought;

c. this certification is conditioned upon total payment of any fee required pursuant to 23 CCR division 3, chapter 28, and owed by the applicant.

14. This Order shall expire on December 31, 2012.

15. This Order rescinds Regional Board Order No. 97-141, except for enforcement purposes.

I, Tracy J. Egoscue, Executive Officer, do hereby certify that the foregoing is a full, true, and correct copy of an Order adopted by the California Regional Water Quality Control Board, Los Angeles Region, on December 6, 2007.

Chief Deputy E.O. For

TRACY J. EGOSCUE
Executive Officer

\jml

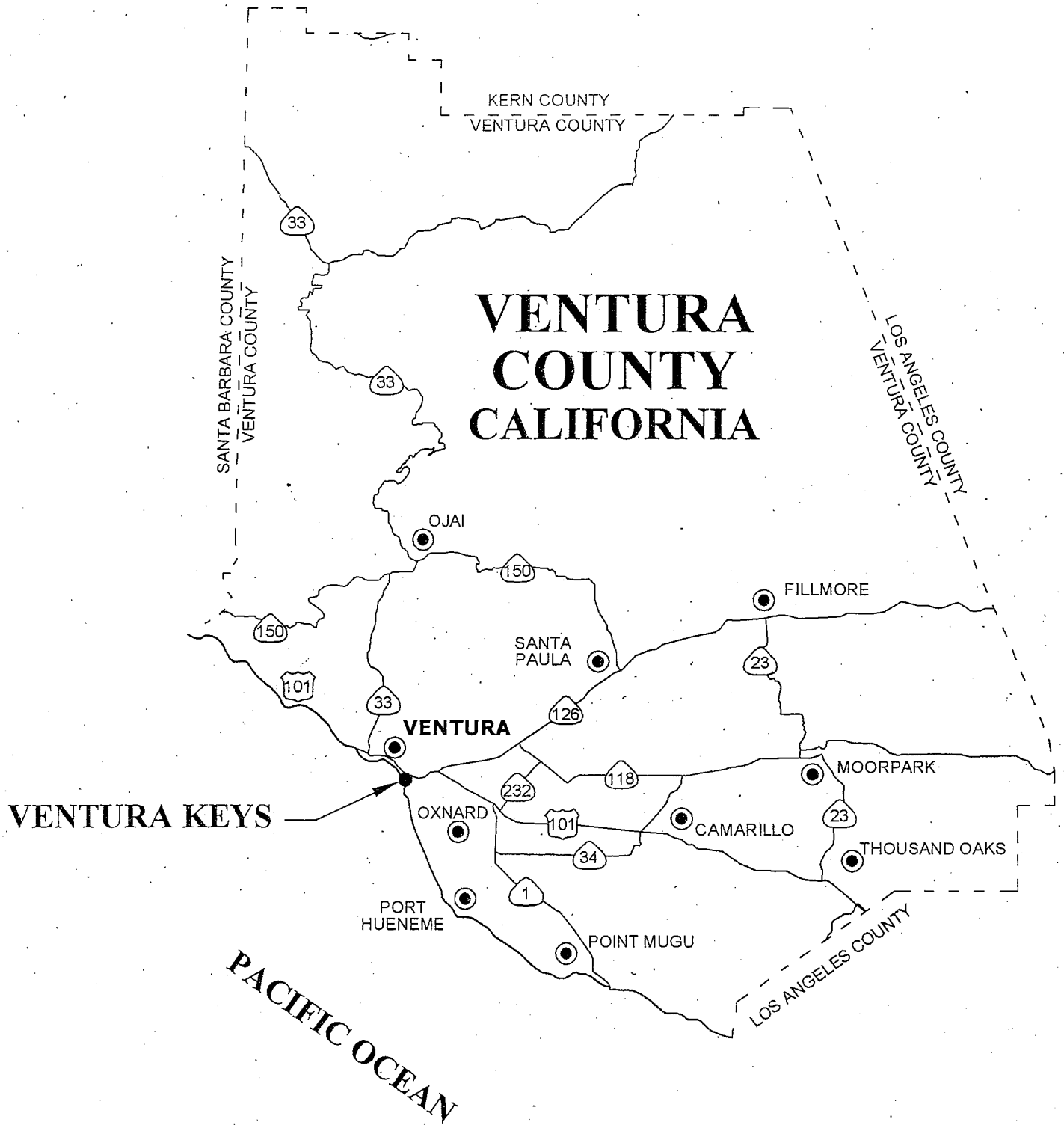

NO SCALE

Applied Environmental Technologies, Inc.
4561 Market Street, Suite B • Ventura, California 93003
Phone (805)650-1400 Fax (805)650-1576

SITE LOCATION PLAN
VENTURA KEYS
VENTURA, CALIFORNIA

PLATE REFERENCE 0048-29_P1	AUGUST 15, 2007	PROJECT NUMBER 0048-29

PLATE 1

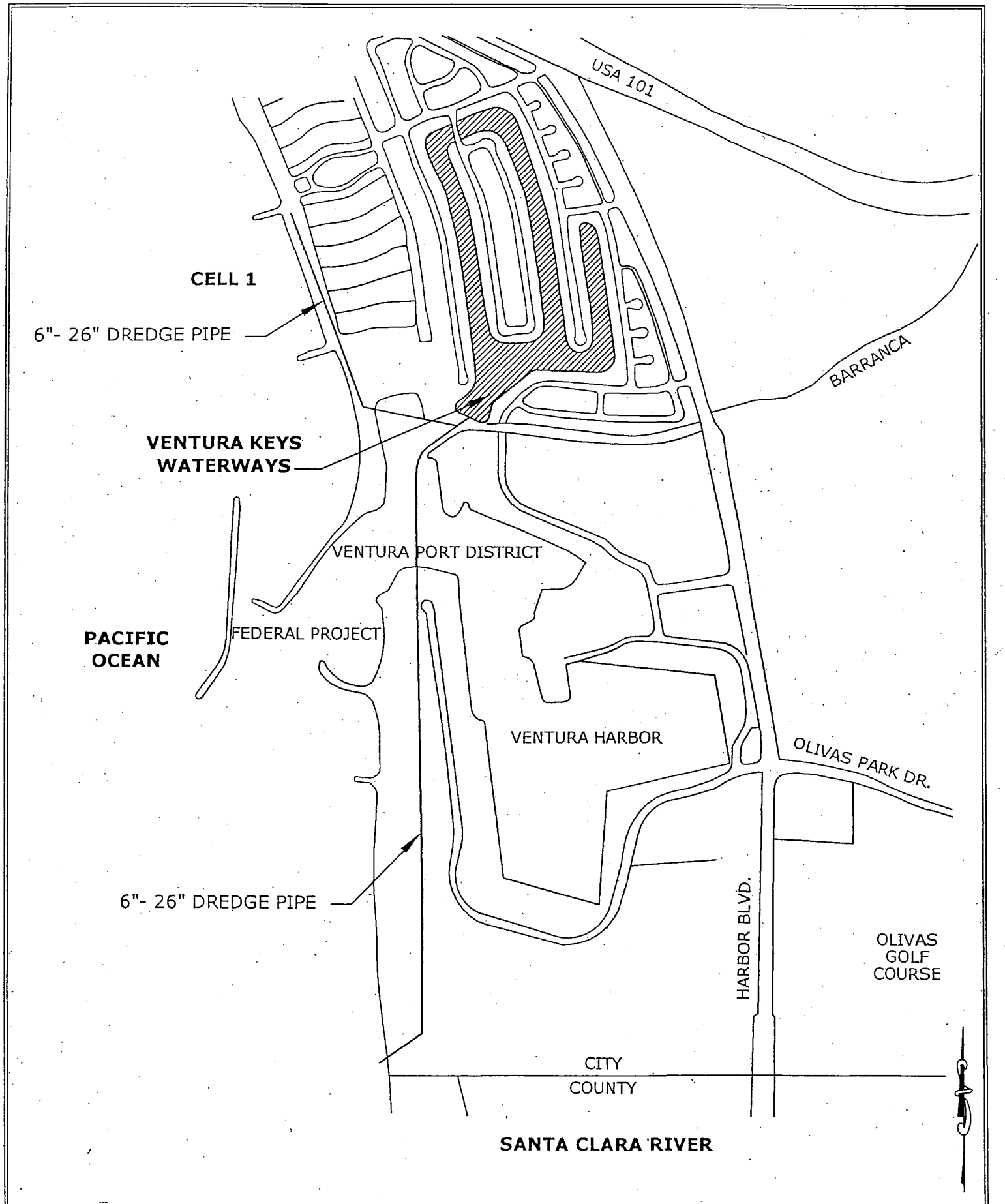

Applied
Environmental
Technologies, Inc.
4561 Market Street, Suite B • Ventura, California 93003
Phone (805)650-1400 Fax (805)650-1576

SITE LOCATION PLAN
VENTURA KEYS
VENTURA, CALIFORNIA

PLATE REFERENCE 0048-29_P2	AUGUST 15, 2007	PROJECT NUMBER 0048-29

PLATE 2

DREDGE VOLUME	
CONNECTING CHANNEL	
−15	10,400
−17	22,400
CHANNEL 1	
−12	11,200
−14	21,700
CHANNEL 2	
−12	14,000
−14	25,500
CHANNEL 3	
−12	9,800
−14	15,300

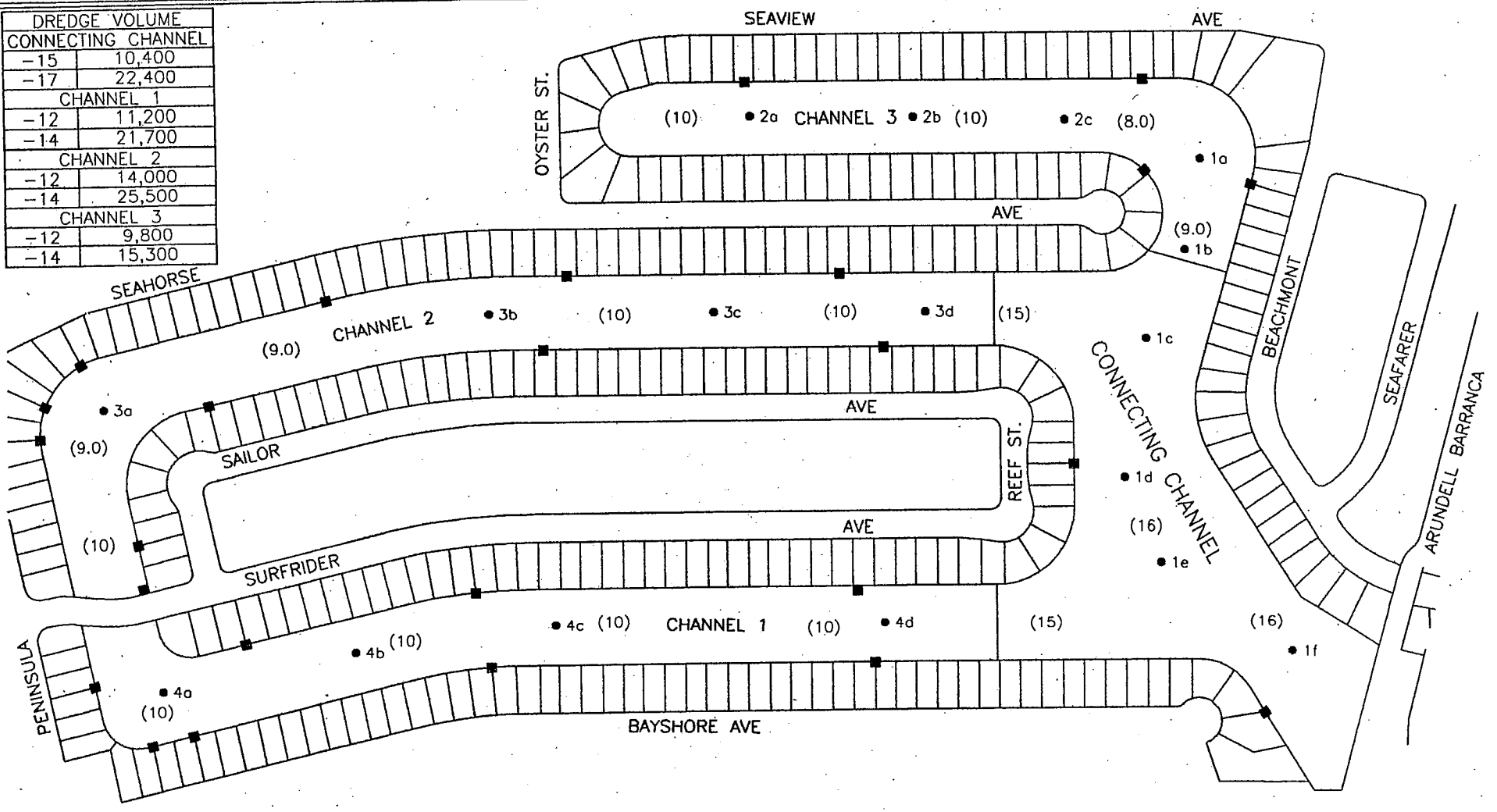

LEGEND

• SEDIMENT SAMPLING LOCATION

■ STORM DRAIN LOCATIONS

(8.0) CONDITION SURVEY DEPTHS MAY 2007 IN FEET (MLLW)

0' 300' 600'

SCALE - 1" = 300' AT 8.5" x 11"

Applied Environmental Technologies, Inc.

4561 Market Street, Suite B • Ventura, California 93003
Phone (805)650-1400 Fax (805)650-1576

PROPOSED DREDGING AREA
VENTURA KEYS
VENTURA, CALIFORNIA

PLATE REFERENCE 0048-29_P3	AUGUST 15, 2007	PROJECT NUMBER 0048-29

PLATE 3

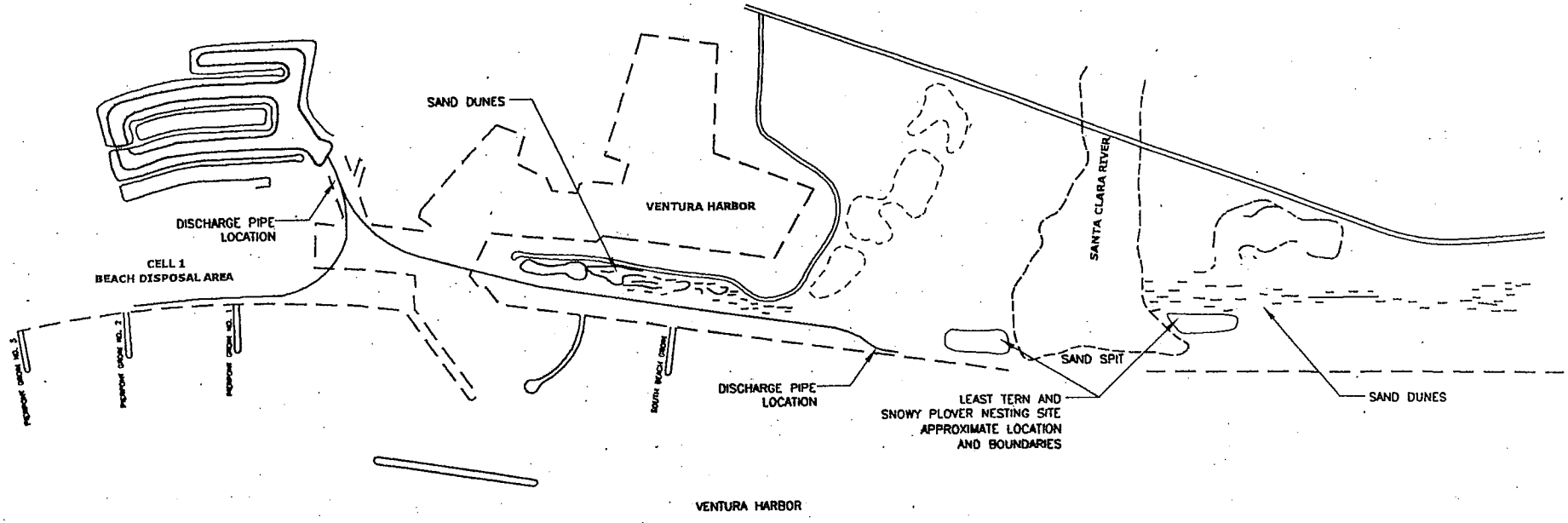

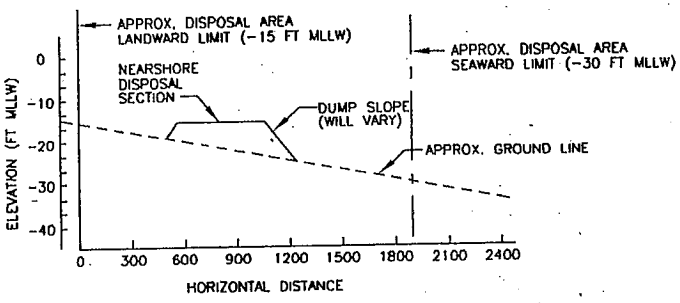

NEARSHORE DISPOSAL SITE

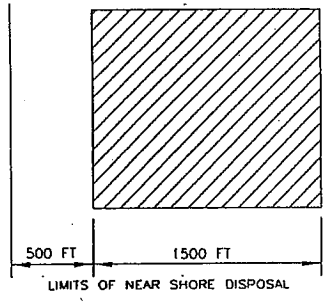

LIMITS OF NEAR SHORE DISPOSAL

Applied Environmental Technologies, Inc.
4561 Market Street, Suite B • Ventura, California 93003
Phone (805)650-1400 Fax (805)650-1576

DEPOSITION SITES OF EXCAVATED MATERIAL
VENTURA KEYS
VENTURA, CALIFORNIA

PLATE REFERENCE 0048-29_P4	AUGUST 15, 2007	PROJECT NUMBER 0048-29

PLATE 4

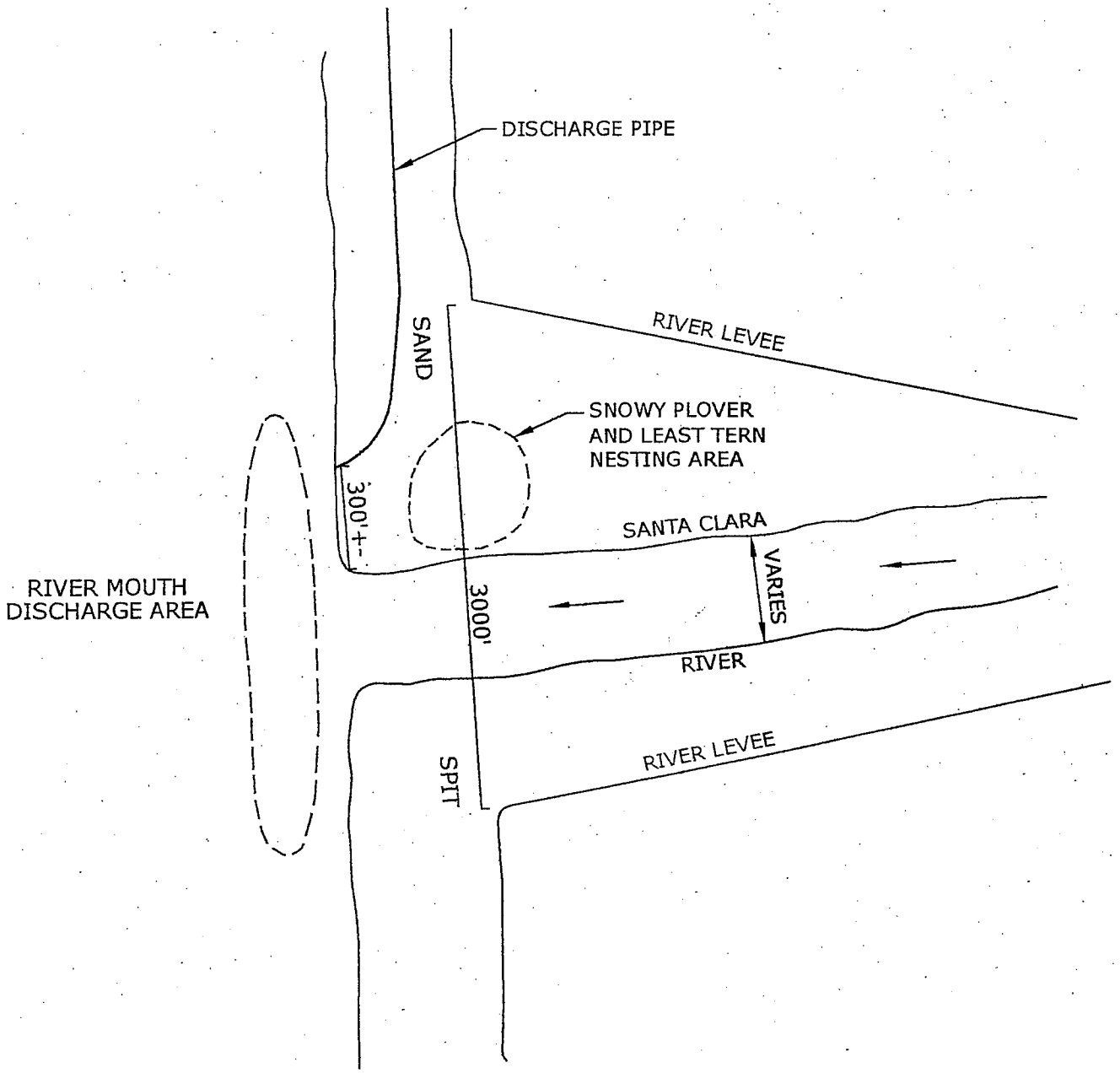

NOT TO SCALE

Applied
Environmental
Technologies, Inc.
4561 Market Street, Suite B • Ventura, California 93003
Phone (805)650-1400 Fax (805)650-1576

RIVER MOUTH DEPOSITION AREA
VENTURA KEYS
VENTURA, CALIFORNIA

PLATE REFERENCE 0048-29_P5	AUGUST 15, 2007	PROJECT NUMBER 0048-29

PLATE 5

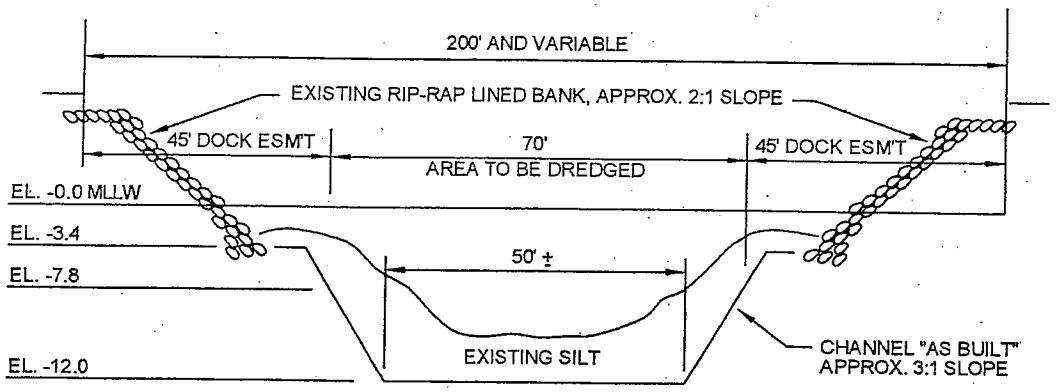

TYPICAL SECTION
FOR CHANNELS 1, 2, AND 3
NOT TO SCALE

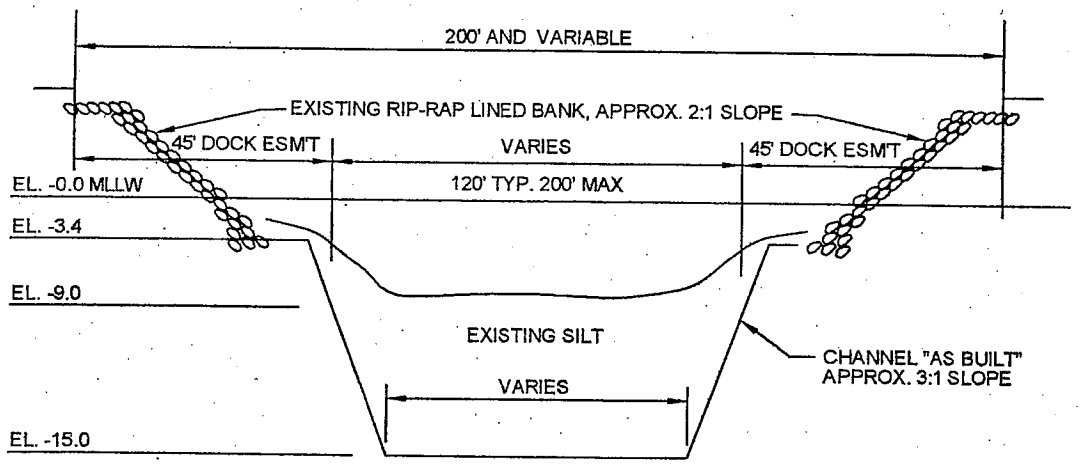

TYPICAL SECTION
FOR CONNECTING CHANNEL
NOT TO SCALE

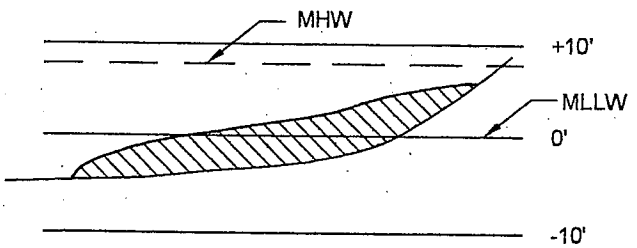

RIVER MOUTH DEPOSITION AREA
NOT TO SCALE

Applied Environmental Technologies, Inc.
4561 Market Street, Suite B • Ventura, California 93003
Phone (805)650-1400 Fax (805)650-1576

PROPOSED DERDGING AND DISPOSAL SECTIONS
VENTURA KEYS
VENTURA, CALIFORNIA

PLATE REFERENCE 0048-29_P6	AUGUST 15, 2007	PROJECT NUMBER 0048-29

PLATE 6

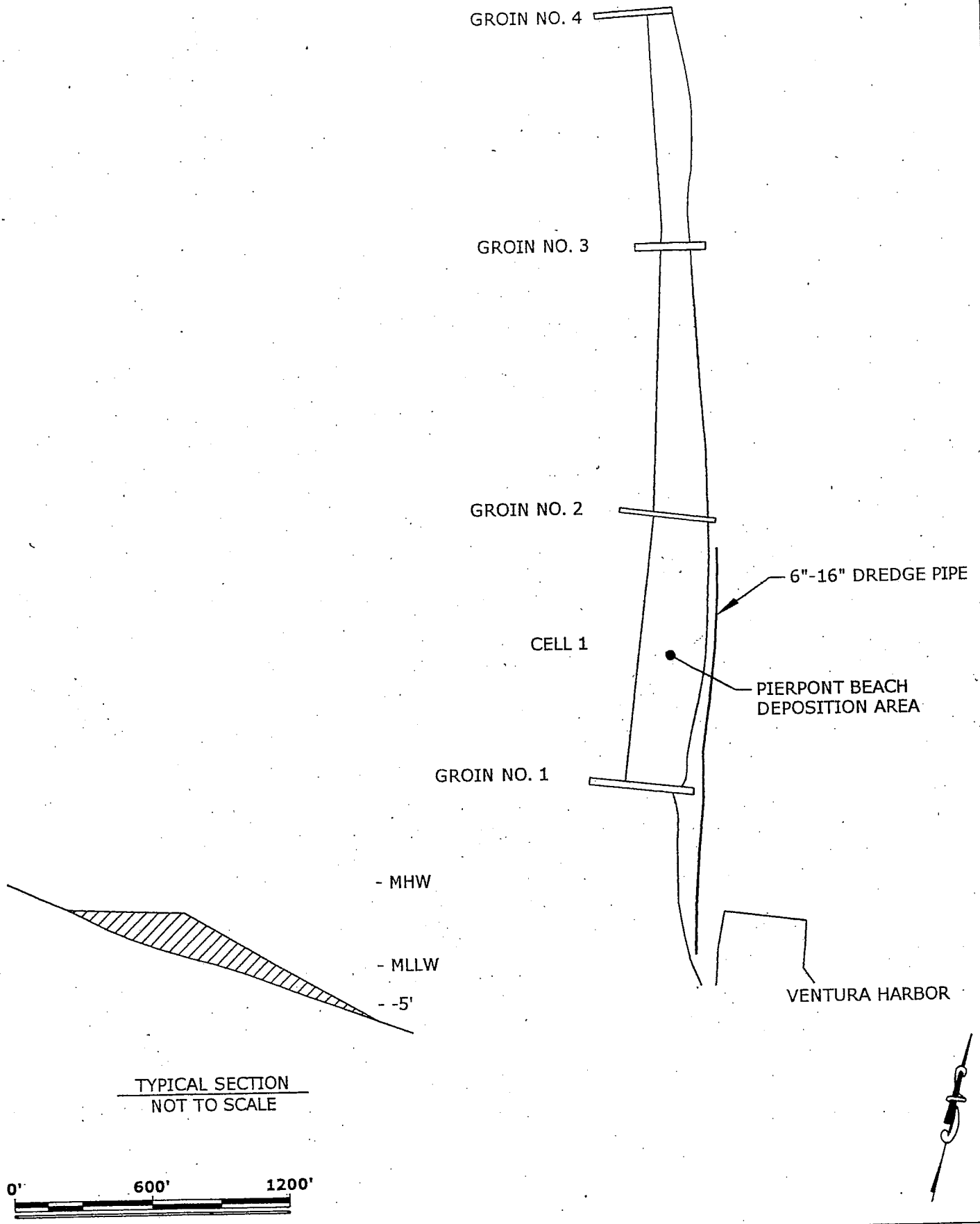

Applied Environmental Technologies, Inc.
4561 Market Street, Suite B • Ventura, California 93003
Phone (805)650-1400 Fax (805)650-1576

PIERPONT DEPOSITION AREA
VENTURA KEYS
VENTURA, CALIFORNIA

PLATE REFERENCE 0048-29_P7	AUGUST 15, 2007	PROJECT NUMBER 0048-29

PLATE 7