San Francisco Bay Regional Water Quality Control Board

TO: Reza Valiyee, 4500 Appian Way, El Sobrante Property Case File

FROM: Yan A. Nusinovich, P.E.
Water Resource Control Engineer

DATE: Thursday, December 08, 2016

SUBJECT: Inspection Report for Reza Valiyee Property, May 2016, Contra Costa County

I inspected the property of Mr. Reza Valiyee at 4500 Appian Way, El Sobrante (Site), on May 11, 2016, since the Discharger had installed a culvert and soil backfill in Appian Creek without any of the required permits. Mr. Valiyee had received a Notice of Violation on October 8, 2015 from staff at the California Regional Water Quality Control Board, San Francisco Bay Region (Regional Water Board) and an Enforcement Inspection Report from staff at the California Department of Fish and Wildlife (Fish and Wildlife) on June 8, 2015; Mr. Valiyee had responded to both documents by letter but had refused to remove the culvert or the soil backfill. This report provides background information for the inspection and documents my observations about the size and impacts of the culvert and soil backfill.

Background

Contra Costa County staff learned of illegal creek fill at the Site on April 21, 2015, from a public complaint. Warden Nicole Kozicki of Fish and Wildlife inspected the Site alone on April 23, 2015, and together with Contra Costa County staff on April 29, 2015. On June 8, 2015, Warden Kozicki sent an Enforcement Inspection Report requiring that Mr. Valiyee remove the culvert, restore the creek, and report to Fish and Wildlife. Mr. Valiyee did not follow the requirements in the Enforcement Inspection Report, and Warden Kozicki notified the Regional Water Board about the violations. Regional Water Board staff sent a Notice of Violation on October 8, 2015, requiring that Mr. Valiyee remove the culvert, restore the creek, report to Fish and Wildlife and the Regional Water Board, and obtain a number of required permits. There is no record of Mr. Valiyee having applied for any of the necessary permits or of his having removed the culvert or begun restoration. Mr. Valiyee responded with a letter on October 31, 2015, which included an invitation to visit the property and work out “a proper solution.” We contacted Mr. Valiyee to meet him at his property on May 11, 2016, and inspect the unpermitted culvert and soil backfill.

May 11, 2016, Inspection

The objectives of this inspection were to determine the magnitude and possible impacts of the unpermitted culvert and soil backfill and to determine whether any work had been performed to remove the culvert and restore the creek. Tahsa Sturgis, a Water Resource Control Engineer, and I conducted the inspection with two Site representatives, Reza Valiyee, the Site owner, and Masood Esmaili, the Site Maintenance Manager. The inspection took place from 11:00 a.m. to 12:30 p.m. Mr. Valiyee and Mr. Esmaili met with Water Board staff at the start of the inspection and gave us permission to access the Site and take photographs.

We proceeded around the Site and took photographs, notes, and measurements of the culvert, creek, and water depth and width (see Exhibit A). We observed that the unpermitted culvert and fill described in the October 8, 2015, Notice of Violation were still in place.

Based on our measurements during the inspection, we estimate that the culvert placed in Appian Creek was 100 feet long and had a diameter of 48.5 inches. The culvert volume was approximately 1,290 cubic feet, and the fill placed in Appian Creek surrounding the culvert was approximately 2,310 cubic feet. The acreage of the area culverted is approximately 0.03 acres.

We observed hydromodification of Appian Creek where the culvert was installed. Based on our measurements, the culverted part of Appian Creek has 64% less volume than the channel immediately upstream of the culvert. The cross-sectional area of the water was approximately 90 percent smaller in the culverted part of Appian Creek, going from a wider, deeper stream at the entrance to a narrow trickle within the culvert, and then widening and deepening again at the exit (Exhibit A, Table A1: Inspection Measurements). The culvert was set approximately three inches higher than the channel of Appian Creek and we observed that some of the water flowed under the culvert. The flow in the culvert visually appeared to move at a faster velocity than the flow in Appian Creek upstream of the culvert (Exhibit A, Inspection Photographs).

Part of the culverted area of the creek had a lower density of vegetation and a path across the creek. Mr. Valiyee said that this area was altered so that he could "access the back of his property."

We discussed the violations with Messrs. Valiyee and Esmaili, including the fact that the culvert was not properly engineered because it significantly narrowed the width of the original channel, modified the original channel alignment, and was installed higher than the creek bed.[1] Mr. Valiyee acknowledged that "in a rain, all these branches come and clog the culvert." We informed Messrs. Valiyee and Esmaili that the culvert would have to be removed and the creek would have to be restored.

Attachments

Exhibit A: May 11, 2016, Inspection Photographs and Measurements

[1] See Bureau of Land Management, Low-Volume Road BMPs, Chapter 8: Culvert Use, Installation, and Sizing. http://www.blm.gov/bmp/low%20volume%20engineering/J_Ch8_Culvert_Use_Installation_&_Sizing.pdf. Accessed October 18, 2016.

Exhibit A: May 11, 2016, Inspection Photographs and Measurements

Figure A1: Inspection Photograph Locations

Image downloaded from Google Earth Pro on May 11, 2016, and modified by Regional Water Board staff. Light blue arrows show approximate current creek flow. Dark blue arrows show approximate location of creek flow before installation of culvert. Red arrows show approximate culvert flow. Grey arrows with red outline show photograph location and direction.

Inspection Photographs

Photographs 1, 3, 5, 6, and 7 by Yan Nusinovich, and photographs 2, 4, 8, and 9 by Tahsa Sturgis.

Photograph 1: Red arrow show approximate length of culvert (100 feet).

Photograph 2: Appian Creek and riparian vegetation upstream of the culvert.

Photograph 3: Entrance of the culvert at upstream end.

Photograph 4: Entrance of the culvert. The bottom of the channel upstream of the culvert was approximately three inches above the bottom of the culvert.

We observed the creek flowing into the culvert (solid arrow) and apparent underflow beneath the culvert (dashed arrow).

Based on our visual observations, the velocity at the entrance of the culvert appeared to be much higher than at the exit of the culvert.

The area between the orange lines had a lower density of vegetation, and the vegetation looked different from the area outside the orange lines.

Mr. Valiyee said that this area was altered so that he could “access the back of his property.”

Photograph 5: Crossing constructed across Appian Creek (thin orange lines). The arrows show the approximate location of the culvert below the crossing and the direction of stream flow.

Photograph 6

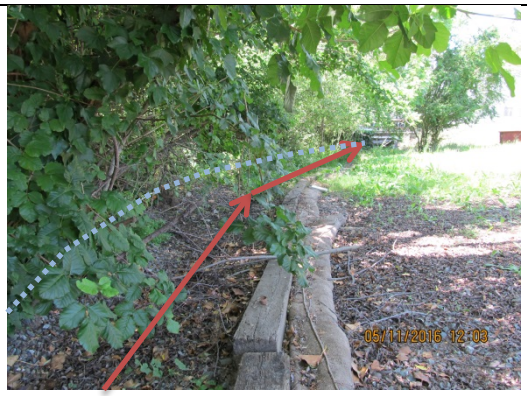

Photograph 7

The apparent original channel of the creek was approximately 10 feet south of the new channel of the culvert.

Our estimates of the course of the original channel of the creek were based on presence and location of the strip of riparian vegetation and a linear depression in the center of it, and our estimate of the location of the culvert was based on visual observations and estimates of the angles and distances we saw from the exposed ends of the culvert.

Photograph 8: Exit of the culvert. We observed a lower velocity than at the entrance.

Photograph 9: Appian Creek and riparian vegetation downstream of the culvert. Appian Creek flows into a tunnel under a neighboring apartment building.

Table A1: Inspection Measurements

Diagrams are simple graphics to aid understanding and are not drawn to scale. All measurements are in inches unless otherwise specified.

Appian Creek cross-section upstream of culvert

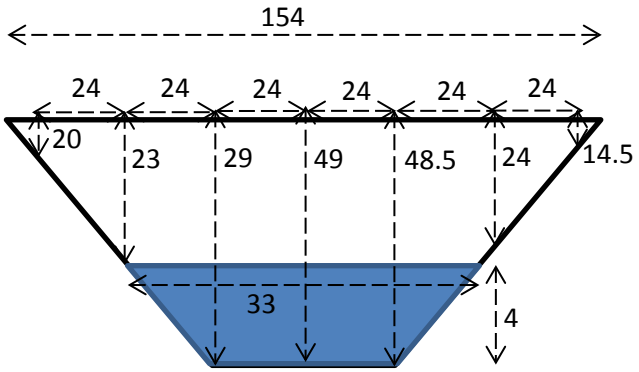

Upstream end of culvert

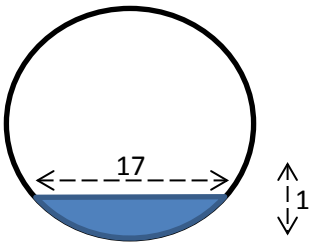

Appian Creek cross-section downstream of culvert

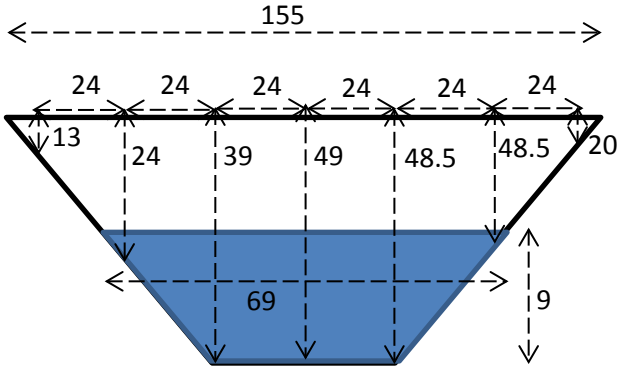

Downstream end of culvert

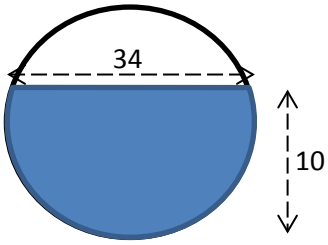

Based on the culvert dimensions, the culvert volume is approximately 1,290 cubic feet.
Based on the average of the upstream and the downstream cross-sectional areas multiplied by the length culverted, the volume culverted and filled is approximately 3,600 cubic feet.
Comparing the two volumes above, the available volume for water flow decreased by 64.2 percent after the addition of the culvert.
Assuming approximately rectangular flows, the upstream Appian Creek water flow was approximately 0.9 cubic feet and the upstream culvert water flow was approximately 0.1 cubic feet, a 90 percent decrease in flow area.
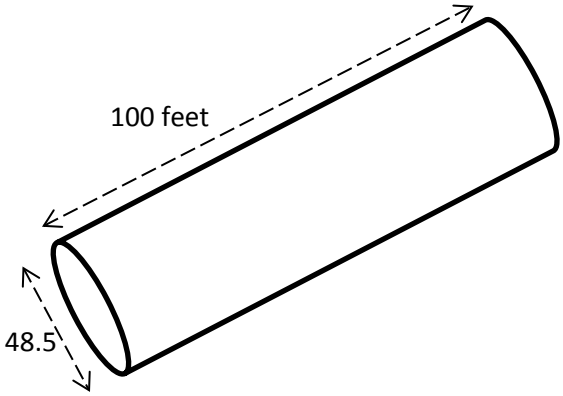
Culvert dimensions