Attachment D:
Phase I, Reach 1 60 Percent Design Plans

Phase I, Reach I 60 Percent Design Plans
are from the 401 Water Quality Certification
Application materials received from June 16, 2017,
through September 2017

South San Francisco Bay
Shoreline Project

City of San Jose
Santa Clara County

December 2017

SOUTH SAN FRANCISCO BAY SHORELINE
REACH 1

US Army Corps of Engineers
San Francisco District

Santa Clara County
California - STA 0+00 to 41+91.38

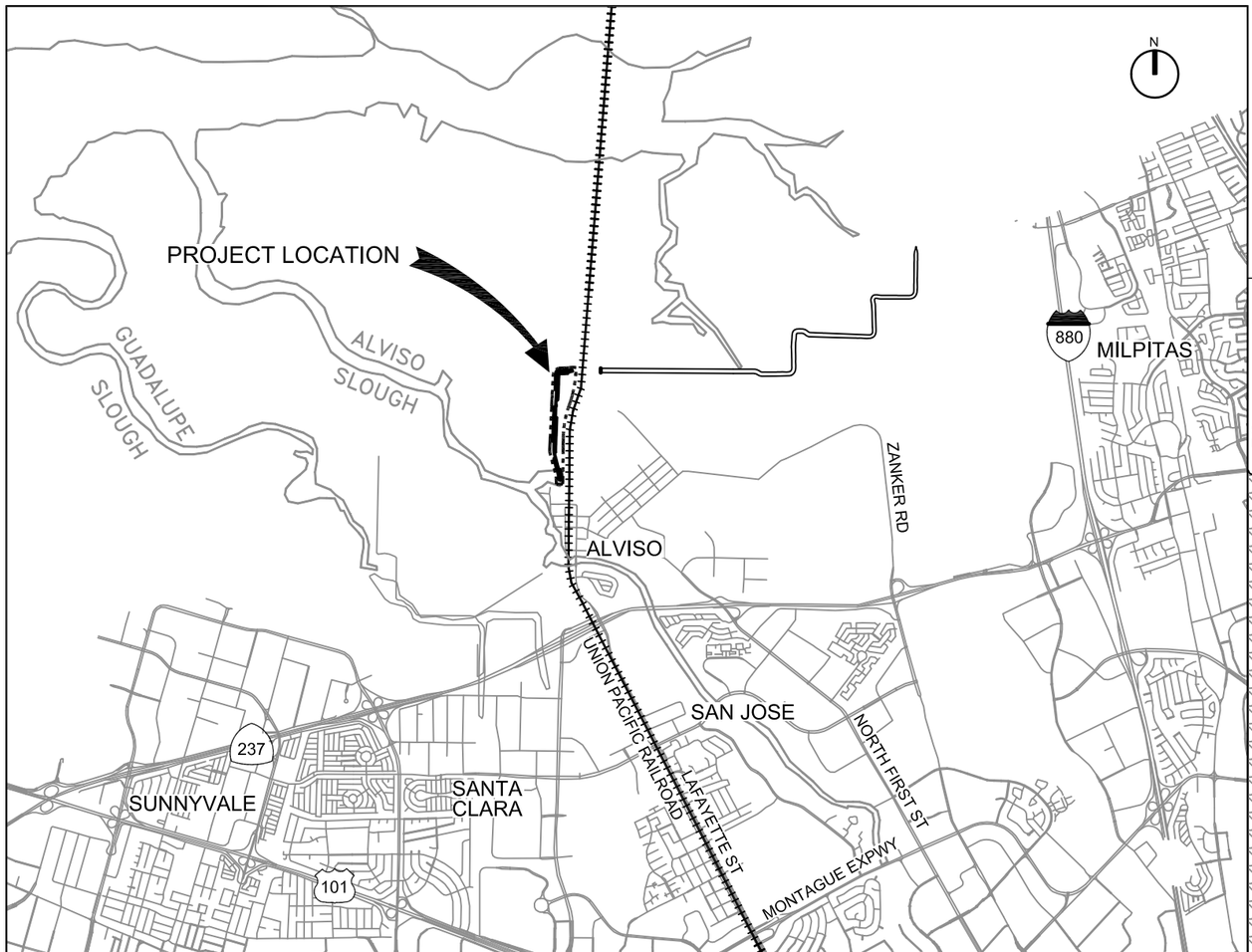

LOCATION MAP
SCALE: 1"=2,500'

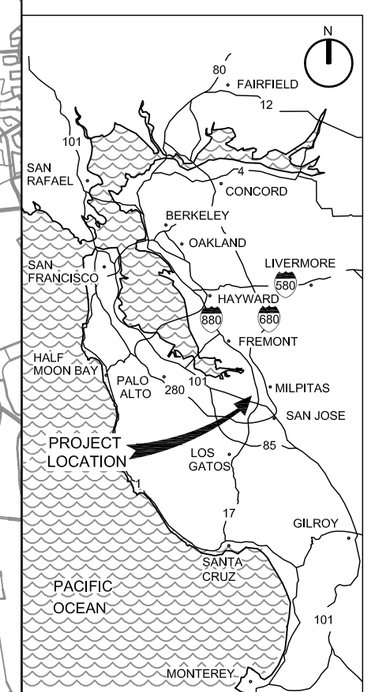

VICINITY MAP
NTS

60% DESIGN
NOT FOR CONSTRUCTION

US Army Corps of Engineers
San Francisco District
1455 Market Street
San Francisco, CA 94103

HDR Engineering, Inc.

Mark	Description	Date	Appr.

DESIGNED BY: DT
CHECKED BY: DJ
DRAWN BY: AA
DATE: 05/JUL/2017
SHEET NO. 1 of 32
DRAWING NO. 1004 71 46

SUBMITTED BY: Chief, Civil Design Section
APPROVAL RECOMMENDED BY: Chief, Engineering Branch
APPROVED BY: Chief, Engineering & Technical Services Division

PREPARED UNDER THE DIRECTION OF
John C. Morrow
Lt Colonel, DISTRICT COMMANDER

SANTA CLARA COUNTY
CALIFORNIA
SOUTH SAN FRANCISCO BAY SHORELINE
REACH 1
COVER SHEET AND LOCATION MAP

Sheet reference number
G-001
1 OF 32

C:\pwworking\west01\d0156187\ 10047146G-001.dwg 27 Jun 2017 - 5:36pm

GENERAL

CIVIL

TRANSPORTATION

60% DESIGN
NOT FOR CONSTRUCTION

US Army Corps of Engineers
San Francisco District
1455 Market Street
San Francisco, CA 94103

HDR Engineering, Inc.

Mark	Description	Date	Appr.

SUBMITTED BY: Chief, Civil Design Section
APPROVAL RECOMMENDED BY: Chief, Engineering Branch
APPROVED BY: Chief, Engineering & Technical Services Division

DESIGNED BY: DT
CHECKED BY: DJ
DRAWN BY: AA
DATE: 05/JUL/2017
SHEET NO. 2 of 32
DRAWING NO. 1004 71 46

PREPARED UNDER THE DIRECTION OF
John C. Morrow
Lt Colonel, DISTRICT COMMANDER

SANTA CLARA COUNTY CALIFORNIA
SOUTH SAN FRANCISCO BAY SHORELINE
REACH 1
SHEET INDEX

Sheet reference number
G-002
2 OF 32

C:\pwworking\west01\d0156187\ 10047146G-002.dwg 30 Jun 2017 - 8:39am

ABBREVIATIONS

AB	- AGGREGATE BASE
ALIGN	- ALIGNMENT
APPROX	- APPROXIMATE
ASTM	- AMERICAN SOCIETY FOR TESTING MATERIALS
BRG	- BEARING
BC	- BEGIN CURVE
BM	- BENCH MARK
BOP	- BEGINNING OF PROFILE
BVCE	- BEGIN VERTICAL CURVE ELEVATION
BVCS	- BEGIN VERTICAL CURVE STATION
C	- CENTER
℄	- CENTERLINE
CONC	- CONCRETE
CONST	- CONSTRUCTION
DIA	- DIAMETER
(E)	- EXISTING
E	- EAST
EC	- END CURVE
ELEV/EL	- ELEVATION
EOP	- END OF PROFILE
EP	- EDGE OF PAVEMENT
EVCE	- END VERTICAL CURVE ELEVATION
EVCS	- END VERTICAL CURVE STATION
FG	- FINISHED GRADE
FT	- FEET
GB	- GRADE BREAK
HORIZ	- HORIZONTAL
HT	- HEIGHT
IN	- INCH
L	- LEFT
LF	- LINEAR FEET
LG	- LONG
LT	- LEFT
LVC	- LENGTH OF VERTICAL CURVE
MAINT	- MAINTENANCE
MIN	- MINIMUM
MON	- MONUMENT
MW	- MONITORING WELL
N	- NORTH
N/A	- NOT APPLICABLE
NAVD	- NORTH AMERICAN VERTICAL DATUM
NE	- NORTHEAST
NO	- NUMBER
NTS	- NOT TO SCALE
NUM	- NUMBER
NW	- NORTHWEST
O&M	- OPERATION & MAINTENANCE
OG	- ORIGINAL GROUND
PC	- POINT OF CURVATURE
P.E.	- PROFESSIONAL ENGINEER
PI	- POINT OF INTERSECTION
POT	- POINT ON TANGENT
P&P	- PLAN & PROFILE
PRC	- POINT OF REVERSE CURVE
PT	- POINT OF TANGENCY
PVMT	- PAVEMENT
R	- RADIUS, RIGHT
RD	- ROAD
RR	- RAILROAD
RSP	- ROCK SLOPE PROTECTION
RT	- RIGHT
R/W	- RIGHT OF WAY
S	- SLOPE/SOUTH
SCHED	- SCHEDULE
SCVWD	- SANTA CLARA VALLEY WATER DISTRICT
SE	- SOUTHEAST
SHT	- SHEET
SJ/SC WWTP	SAN JOSE/SANTA CLARA WASTEWATER TREATMENT PLANT
ST	- STREET
STA	- STATION
STD	- STANDARD
STL	- STEEL
SW	- SOUTHWEST
SWPPP	- STORM WATER POLLUTION PREVENTION PLAN
TBM	- TEMPORARY BENCH MARK
TCA	- TEMPORARY CONSTRUCTION AREA
TCE	- TEMPORARY CONSTRUCTION EASEMENT
TOB	- TOP OF BANK
TOL	- TOP OF LEVEE
UG	- UNDERGROUND
UPRR	- UNION PACIFIC RAILROAD
USACE	- UNITED STATES ARMY CORPS OF ENGINEERS
USGS	- UNITED STATES GEOLOGICAL SURVEY
VERT	- VERTICAL
W	- WEST
WSE	- WATER SURFACE ELEVATION
W/	- WITH
&	- AND
@	- AT
℄	- CENTERLINE
ℙ	- PROPERTY LINE

60% DESIGN
NOT FOR CONSTRUCTION

US Army Corps of Engineers
San Francisco District
1455 Market Street
San Francisco, CA 94103

HDR Engineering, Inc.

Mark.	Description	Date	Appr.

SUBMITTED BY: Chief, Civil Design Section
APPROVAL RECOMMENDED BY: Chief, Engineering Branch
APPROVED BY: Chief, Engineering & Technical Services Division

DESIGNED BY: DT
DATE: 05/JUL/2017
SHEET NO. 03 of 32
CHECKED BY: DJ
DRAWING NO. 1004 71 46
DRAWN BY: AA

PREPARED UNDER THE DIRECTION OF
John C. Morrow
Lt Colonel, DISTRICT COMMANDER

SANTA CLARA COUNTY CALIFORNIA
SOUTH SAN FRANCISCO BAY SHORELINE
REACH 1
GENERAL ABBREVIATIONS

Sheet reference number
G-003
3 OF 32

C:\pwworking\west01\d0156187\ 10047146G-003.dwg 28 Jun 2017 - 5:28pm

SITE PLAN SYMBOLOGY

- TELEPHONE POLE
- POWER POLE
- ELECTRIC PULL BOX
- ELECTRIC METER
- IRRIGATION VALVE
- WATER VALVE
- AIR RELEASE VALVE
- FIRE HYDRANT
- STORM DRAIN MANHOLE
- GRATE
- SIGN
- STREET LIGHT
- STOP LIGHT
- GUY POLE
- GUYANCHOR
- MANHOLE
- VEGETATION (TREE)
- APPROXIMATE LOCATION OF BORINGS
- SURVEY CONTROL POINT
- TEMPORARY CONSTRUCTION SIGN
- GATE
- BOLLARD
- POST
- HOSE BIB
- DROP INLET
- TREE TO BE REMOVED
- SURVEY MARKER LOCATION

SITE PLAN SYMBOLOGY (CONT)

- 5+00 — CENTERLINE AND STATION
- RIGHT-OF-WAY
- CUT SLOPE
- FILL SLOPE
- DEMOLITION AREA
- EXISTING DIKE TOE
- LEVEE TOE
- DEGRADE/DIKE DEGRADE
- O&M
- CONSTRUCTION LIMIT
- PRE SETTLEMENT TOP OF LEVEE
- PRE SETTLEMENT TOP OF LEVEE
- EXISTING DIKE\EXISTING GROUND
- ESTIMATED BOTTOM OF BAY MUD
- L-1 — ALIGNMENT PLAN LINE NUMBER
- C-1 — ALIGNMENT PLAN CURVE NUMBER
- 2% — SLOPE

MATERIALS IN PLAN/SECTION (CONT)

- AGGREGATE SURFACE COURSE
- DEGRADED MATERIAL FOR EXISTING DIKE/GROUND RESTORATION
- SUBGRADE FILL
- BORROW AREA A
- BORROW AREA B
- SPOILS AREA C

GENERAL SYMBOLOGY

N

NORTH ARROW AND SCALE BAR

800' 400' 0 800'

X — KEY NOTE NUMBER (EXISTING)

1 — KEY NOTE NUMBER

PLAN
SCALE

X / XXX — SECTION LETTER; ARROW INDICATES DIRECTION OF SECTION CUT; SHEET WHERE SECTION IS LOCATED

A — SECTION LETTER
SECTION
SCALE

1 — DETAIL NUMBER
DETAIL
SCALE

60% DESIGN
NOT FOR CONSTRUCTION

US Army Corps of Engineers
San Francisco District
1455 Market Street
San Francisco, CA 94103

HDR Engineering, Inc.

Mark	Description	Date	Appr.

DESIGNED BY: DT
DATE: 05/JUL/2017
CHECKED BY: DJ
SHEET NO. 4 of 32
DRAWING NO. 1004
DRAWN BY: AA
71
46

SUBMITTED BY: Chief, Civil Design Section
APPROVAL RECOMMENDED BY: Chief, Engineering Branch
APPROVED BY: Chief, Engineering & Technical Services Division

PREPARED UNDER THE DIRECTION OF
John C. Morrow
Lt Colonel, DISTRICT COMMANDER

SANTA CLARA COUNTY CALIFORNIA
SOUTH SAN FRANCISCO BAY SHORELINE
REACH 1
GENERAL LEGEND AND SYMBOLS

Sheet reference number
G-004
4 OF 32

GENERAL NOTES:

1. THE CONTRACTOR SHALL BE RESPONSIBLE FOR FURNISHING AND MAINTAINING ALL WARNING SIGNS, DEVICES, AND FEATURES NECESSARY TO PROTECT THE HEALTH AND SAFETY OF THE GENERAL PUBLIC AND WORKERS AND TO PROVIDE FOR THE PROPER SAFE ROUTING OF VEHICULAR AND PEDESTRIAN TRAFFIC DURING THE PERFORMANCE OF WORK.

2. THE CONTRACTOR SHALL BE RESPONSIBLE FOR COMPLIANCE WITH ALL APPLICABLE FEDERAL, STATE, AND LOCAL LAWS, RULES AND REGULATIONS APPLICABLE TO ALL WORK PERFORMED UNDER THE CONTRACT.

3. CONTRACTOR SHALL PROVIDE AND IMPLEMENT A STORM WATER POLLUTION PREVENTION PLAN (SWPPP) IN ACCORDANCE WITH THE SPECIFICATIONS AND PERMITS.

4. THE CONTRACTOR SHALL VERIFY ALL DIMENSIONS, SIZES, AND LOCATIONS OF ALL EXISTING FACILITIES AND FEATURES BEFORE STARTING WORK AND SHALL IMMEDIATELY NOTIFY THE ENGINEER OF ANY DISCREPANCIES.

5. THE CONTRACTOR IS HEREBY NOTIFIED THAT, PRIOR TO COMMENCING CONSTRUCTION, THE CONTRACTOR IS RESPONSIBLE FOR CONTACTING ALL UTILITIES COMPANIES WHO ARE INVOLVED WITH THIS PROJECT. IN ADDITION, THE CONTRACTOR IS TO REQUEST TO HAVE ALL UNDERGROUND UTILITIES THAT MAY POSSIBLY CONFLICT WITH THE ABOVE OR BELOW GROUND IMPROVEMENTS, LOCATED IN THE FIELD. THE CONTRACTOR AND ANY SUBCONTRACTOR ARE REQUIRED TO NOTIFY THE UNDERGROUND SERVICE ALERT 48 HOURS IN ADVANCE OF PERFORMING ANY EXCAVATION BY CALLING 1-800-227-2600.

6. THE CONTRACTOR IS RESPONSIBLE FOR THE PROTECTION OF ALL EXISTING MONUMENTS AND OTHER SURVEY MARKERS. MONUMENTS AND SURVEY MARKERS REMOVED OR DESTROYED DURING CONSTRUCTION SHALL BE REPLACED BY A LICENSED LAND SURVEYOR AT THE CONTRACTOR'S EXPENSE. CONTRACTOR SHALL PROVIDE AGENCY SURVEYORS WITH AT LEAST 48 HOURS ADVANCE NOTICE PRIOR TO REPLACEMENT OF MONUMENT AND/OR MARKER.

7. THE CONTRACTOR SHALL BE RESPONSIBLE FOR MAINTAINING RECORD DRAWINGS FOR ALL WORK THROUGHOUT THE COURSE OF CONSTRUCTION. SUCH DRAWINGS SHALL RECORD THE LOCATION AND AS-BUILT CONDITION OF ALL PROJECT ELEMENTS. COPIES SHALL BE DELIVERED TO THE GOVERNMENT ENGINEER PRIOR TO THE ACCEPTANCE OF THE WORK AS INDICATED IN THE SPECIFICATIONS.

8. DRAWINGS SHOWN WITH AERIAL PHOTOS ARE PROVIDED FOR REFERENCE ONLY. ALL FACILITIES MAY NOT BE SHOWN ON THE PHOTOS. CONTRACTORS SHALL SATISFY THEMSELVES AS TO THE LOCATION OF EXISTING FACILITIES THAT MAY BE AFFECTED BY CONSTRUCTION.

9. EXISTING FENCING AND GATES WITHIN THE RIGHT-OF-WAY SHALL BE REMOVED AS REQUIRED FOR CONSTRUCTION. SALVAGING AND REPLACING OF FENCING ITEMS SHALL BE IN ACCORDANCE WITH THE SPECIFICATIONS. WHERE EXISTING FENCING OR BARRIERS ARE REMOVED, TEMPORARY BARRIERS SHALL BE PROVIDED. FENCING, GATES, AND SIGNS SHALL BE IN LIKE CONDITION FOLLOWING CONSTRUCTION.

10. CONTRACTOR SHALL PROVIDE DUST CONTROL AND STREET CLEANING MEASURES AT ALL TIMES.

11. THE PROJECT SHALL COMPLY WITH ALL DEFINED MITIGATION MEASURES OUTLINED IN THE PROJECTS EIS/EIR.

BASIS OF DESIGN:

1. THE CRITERIA INFORMATION USED FOR THIS DRAWING SET IS DOCUMENTED BY HDR, INC. IN THE FOLLOWING DOCUMENT:
   DESIGN DOCUMENTATION REPORT, SOUTH SAN FRANCISCO BAY SHORELINE PROJECT, REACH 1 LEVEE - 60% DESIGN, JULY 2017

2. THE GEOTECHNICAL INFORMATION USED FOR THIS DRAWING SET IS DOCUMENTED BY HDR, INC. IN THE FOLLOWING DOCUMENT:
   SOUTH SAN FRANCISCO BAY SHORELINE PROJECT, GEOTECHNICAL EVALUATION REPORT, 2017

3. THE PERFORMANCE OF LEVEE SYSTEMS IS DEPENDENT UPON BOTH THE DESIGN CRITERIA AND THE LONG TERM OPERATION AND MAINTENANCE OF THE LEVEES. HDR HAS PREPARED THESE PLANS AND ASSOCIATED SPECIFICATIONS IN ACCORDANCE WITH FEDERAL, STATE, AND USACE GUIDELINES USING INFORMATION FROM MULTIPLE SOURCES. IF EXTREME FLOODS EXCEEDING THE DESIGN ELEVATION, EXTREME EARTHQUAKES, OR OTHER LOADING CONDITIONS NOT EVALUATED IN THE DESIGN OCCUR, THE INTEGRITY OF THE LEVEE SYSTEM MAY BE COMPROMISED.

60% DESIGN
NOT FOR CONSTRUCTION

US Army Corps of Engineers
San Francisco District
1455 Market Street
San Francisco, CA 94103

HDR Engineering, Inc.

Mark	Description	Date	Appr.

DESIGNED BY: DT	CHECKED BY: DJ	DRAWN BY: AA	
DATE: 05/JUL/2017	SHEET NO. 5 of 32	DRAWING NO. 1004 71	46

SUBMITTED BY:
Chief, Civil Design Section
APPROVAL RECOMMENDED BY:
Chief, Engineering Branch
APPROVED BY:
Chief, Engineering & Technical Services Division

PREPARED UNDER THE DIRECTION OF
John C. Morrow
Lt Colonel, DISTRICT COMMANDER

CALIFORNIA
SANTA CLARA COUNTY
SOUTH SAN FRANCISCO BAY SHORELINE
REACH 1
GENERAL NOTES

Sheet reference number
G-005
5 OF 32

N

800' 400' 0 800'

SCALE : 1"=800'

NOTE:

1. HORIZONTAL DATUM: NORTH AMERICAN DATUM OF 1983 (NAD83) (2011) CALIFORNIA STATE PLANE ZONE III, FEET .
2. VERTICAL DATUM: NORTH AMERICAN VERTICAL DATUM OF 1988 (NAVD88) FEET.
3. SURVEY DATA PROVIDED BY TOWILL, INC. (MARCH 2017).
4. AERIAL PERFORMED BY TOWILL INC. (MARCH 2017).

PROJECT CONTROL POINT

POINT NAME	NORTHING (FT)	EASTING (FT)	ELEV (FT)	DESCRIPTION
PPCP 1A	1979663.03	6133021.36	23.01	CENTERED AND SET FLUSH ON HEADWALL OF GOLD ST BRIDGE, SUBJECT TO GROUND MOVEMENT.
PPCP 2A	1987136.12	6137320.34	11.58	USACE BRASS DISK SET FLUSH TOP OF CONCRETE STRUCTURE, QUESTIONABLE RELIABILITY
LPCP 3A	1991039.03	6144693.68	7.32	BRASS DISK SET FLUSH TOP OF TIDE GATE STRUCTURE

PLAN

SCALE: 1" = 800'

60% DESIGN
NOT FOR CONSTRUCTION

US Army Corps of Engineers
San Francisco District
1455 Market Street
San Francisco, CA 94103

HDR Engineering, Inc.

Mark.	Description	Date	Appr.

SUBMITTED BY: Chief, Civil Design Section
APPROVAL RECOMMENDED BY: Chief, Engineering Branch
APPROVED BY: Chief, Engineering & Technical Services Division

DESIGNED BY: DT
DATE: 05/JUL/2017
SHEET NO. 6 of 32
CHECKED BY: DJ
DRAWING NO. 1004 71 46
DRAWN BY: AA

PREPARED UNDER THE DIRECTION OF
John C. Morrow
Lt Colonel, DISTRICT COMMANDER

SANTA CLARA COUNTY CALIFORNIA
SOUTH SAN FRANCISCO BAY SHORELINE
REACH 1
SURVEY CONTROL MAP

Sheet reference number
G-006
6 OF 32

C:\pwworking\west01\d0156187\ 10047146G-006.dwg 27 Jun 2017 - 5:44pm

PLAN

SCALE: 1" = 300'

N

300' 150' 0 300'

SCALE : 1"=300'

NOTE:

A. SITE SHALL BE USED FOR BORROW REQUIREMENTS TO RESTORE THE DEGRADED AREA FROM STA 0+00 TO 3+00. SEE TYPICAL SECTION ON C-500 AND CROSS-SECTIONS ON SHEET C-300.

B. EXISTING DIKE IS UNSUITABLE FOR REUSE.

C. UNSUITABLE EXCAVATED MATERIAL SHALL BE PLACED WITHIN 15 AND 50 FEET OF THE WATERSIDE LEVEE TOE.

OFFSITE BORROW LOCATION SHALL BE USED FOR LEVEE CONSTRUCTION LOCATION TO-BE-DETERMINED BY GOVERNMENT.

60% DESIGN
NOT FOR CONSTRUCTION

US Army Corps of Engineers
San Francisco District
1455 Market Street
San Francisco, CA 94103

HDR Engineering, Inc.

Mark.	Description	Date	Appr.

SUBMITTED BY: Chief, Civil Design Section
APPROVAL RECOMMENDED BY: Chief, Engineering Branch
APPROVED BY: Chief, Engineering & Technical Services Division

DESIGNED BY: DT
DATE: 05/JUL/2017
CHECKED BY: DJ
SHEET NO. 7 of 32
DRAWN BY: AA
DRAWING NO. 1004 71 46

PREPARED UNDER THE DIRECTION OF
John C. Morrow
Lt Colonel, DISTRICT COMMANDER

SANTA CLARA COUNTY CALIFORNIA
SOUTH SAN FRANCISCO BAY SHORELINE
REACH 1

BORROW MAP AND DISPOSAL PLAN

Sheet reference number
G-007
7 OF 32

C:\pwworking\west01\d0156187\ 10047146G-007.dwg 30 Jun 2017 - 9:16am

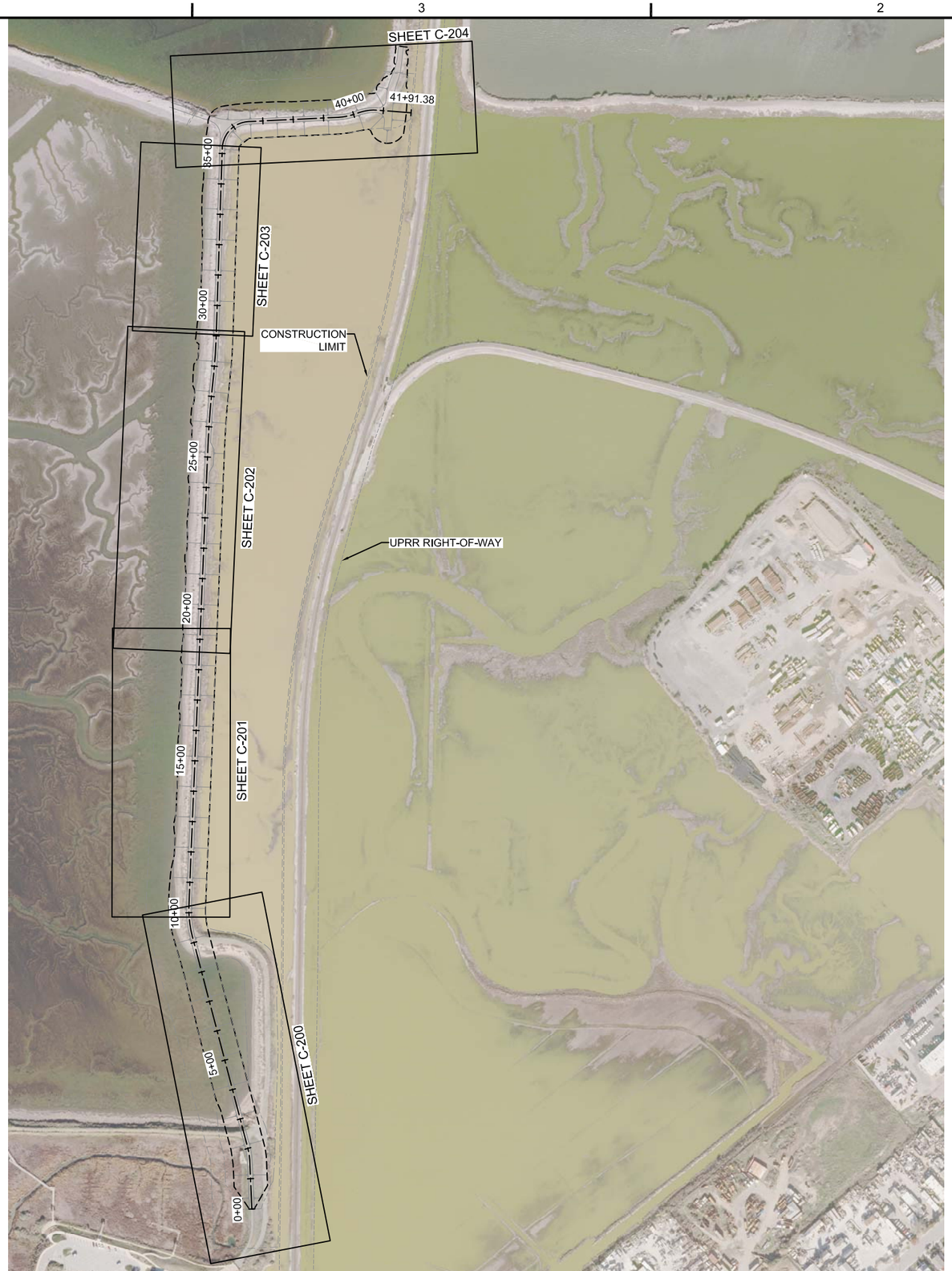

N

200' 100' 0 200'

SCALE : 1"=200'

PLAN

SCALE: 1" = 200'

60% DESIGN
NOT FOR CONSTRUCTION

US Army Corps of Engineers
San Francisco District
1455 Market Street
San Francisco, CA 94103

HDR Engineering, Inc.

Mark.	Description	Date	Appr.

SUBMITTED BY:
Chief, Civil Design Section
APPROVAL RECOMMENDED BY:
Chief, Engineering Branch
APPROVED BY:
Chief, Engineering & Technical Services Division

DESIGNED BY: DT
DATE: 05/JUL/2017
CHECKED BY: DJ
SHEET NO. 8 of 32
DRAWN BY: AA
DRAWING NO. 1004 71 46

PREPARED UNDER THE DIRECTION OF
John C. Morrow
Lt Colonel, DISTRICT COMMANDER

SANTA CLARA COUNTY
CALIFORNIA
SOUTH SAN FRANCISCO BAY SHORELINE
REACH 1
OVERALL SITE PLAN AND KEY MAP

Sheet reference number
G-008
8 OF 32

C:\pwworking\west01\d0156187\ 10047146G-008.dwg 27 Jun 2017 - 5:54pm

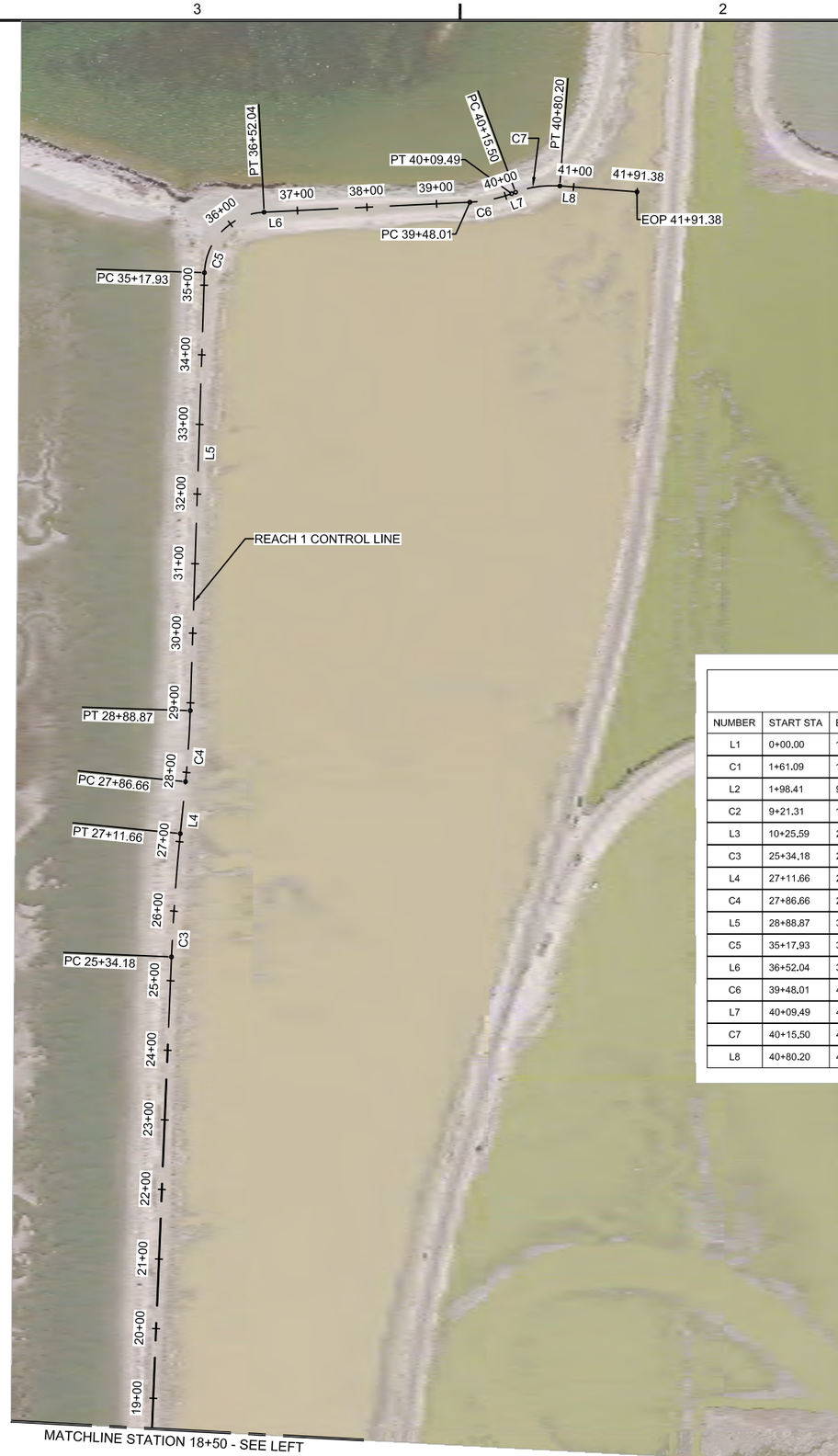

N

100' 50' 0 100'

SACLE : 1"=100'

REACH 1 ALIGNMENT LINE AND CURVE TABLE

NUMBER	START STA	END STA	CURVE PI	LENGTH	DELTA	RADIUS	LINE/CHORD BRNG	START POINT COORDINATE	END POINT COORDINATE
L1	0+00.00	1+61.09	N/A	161.09'	N/A	N/A	N2°28'43"W	N 1982565.28, E 6132520.20	N 1982726.22, E 6132513.23
C1	1+61.09	1+98.41	1+79.82	37.32'	12°13'04"	175.00'	N8°35'15"W	N 1982726.22, E 6132513.23	N 1982763.05, E 6132507.67
L2	1+98.41	9+21.31	N/A	722.90'	N/A	N/A	N14°41'47"W	N 1982763.05, E 6132507.67	N 1983462.29, E 6132324.27
C2	9+21.31	10+25.59	9+73.83	104.28'	17°04'15"	350.00'	N6°09'40"W	N 1983462.29, E 6132324.27	N 1983565.59, E 6132313.12
L3	10+25.59	25+34.18	N/A	1508.60'	N/A	N/A	N2°22'28"E	N 1983565.59, E 6132313.12	N 1985072.89, E 6132375.62
C3	25+34.18	27+11.66	26+22.95	177.47'	3°23'22"	3000.00'	N4°04'09"E	N 1985072.89, E 6132375.62	N 1985249.89, E 6132388.22
L4	27+11.66	27+86.66	N/A	75.00'	N/A	N/A	N5°45'50"E	N 1985249.89, E 6132388.22	N 1985324.51, E 6132395.75
C4	27+86.66	28+88.87	28+37.78	102.21'	3°54'14"	1500.00'	N3°48'43"E	N 1985324.51, E 6132395.75	N 1985426.47, E 6132402.54
L5	28+88.87	35+17.93	N/A	629.06'	N/A	N/A	N1°51'36"E	N 1985426.47, E 6132402.54	N 1986055.20, E 6132422.96
C5	35+17.93	36+52.04	36+00.95	134.12'	85°22'58"	90.00'	N44°33'05"E	N 1986055.20, E 6132422.96	N 1986142.18, E 6132508.58
L6	36+52.04	39+48.01	N/A	295.96'	N/A	N/A	N87°14'34"E	N 1986142.18, E 6132508.58	N 1986156.41, E 6132804.20
C6	39+48.01	40+09.49	39+78.99	61.49'	17°36'53"	200.00'	N78°26'08"E	N 1986156.41, E 6132804.20	N 1986168.69, E 6132864.20
L7	40+09.49	40+15.50	N/A	6.01'	N/A	N/A	N69°37'41"E	N 1986168.69, E 6132864.20	N 1986170.78, E 6132869.84
C7	40+15.50	40+80.20	40+48.36	64.70'	24°42'47"	150.00'	N81°59'05"E	N 1986170.78, E 6132869.84	N 1986179.73, E 6132933.41
L8	40+80.20	41+91.38	N/A	111.18'	N/A	N/A	S85°39'31"E	N 1986179.73, E 6132933.41	N 1986171.32, E 6133044.27

60% DESIGN
NOT FOR CONSTRUCTION

US Army Corps of Engineers
San Francisco District
1455 Market Street
San Francisco, CA 94103

HDR Engineering, Inc.

Mark.	Description	Date	Appr.

DESIGNED BY: DT	CHECKED BY: DJ	DRAWN BY: AA	
DATE: 05/JUL/2017	SHEET NO. 8 of 32	DRAWING NO. 1004	71 46

SUBMITTED BY: Chief, Civil Design Section
APPROVAL RECOMMENDED BY: Chief, Engineering Branch
APPROVED BY: Chief, Engineering & Technical Services Division

PREPARED UNDER THE DIRECTION OF
John C. Morrow
Lt Colonel, DISTRICT COMMANDER

CALIFORNIA
SANTA CLARA COUNTY
SOUTH SAN FRANCISCO BAY SHORELINE
REACH 1
ALIGNMENT LINE AND CURVE PLAN

Sheet reference number
G-009
9 OF 32

C:\pwworking\west01\d0156187\ 10047146G-009.dwg 30 Jun 2017 - 9:19am

NUMBER	START STA	END STA	CURVE PI	LENGTH	DELTA	RADIUS	LINE/CHORD BRNG	START POINT COORDINATE	END POINT COORDINATE

CONSTRUCTION LIMIT LINE AND CURVE TABLE TO BE DEVELOPED AT 90%

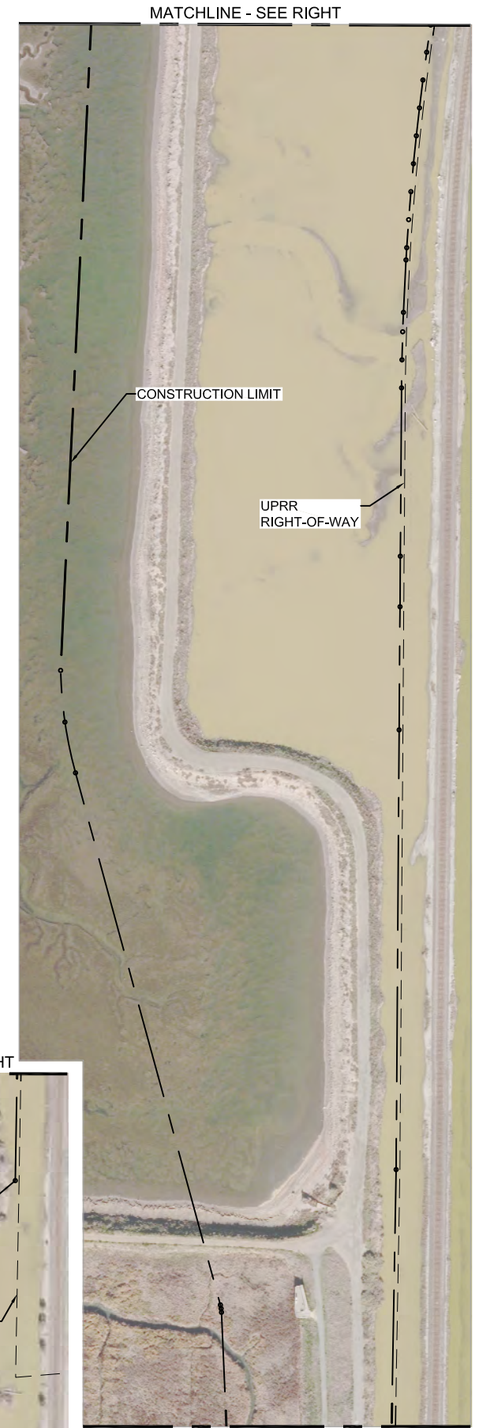

N

100' 50' 0 100'

SACLE : 1"=100'

60% DESIGN
NOT FOR CONSTRUCTION

US Army Corps of Engineers
San Francisco District
1455 Market Street
San Francisco, CA 94103

HDR Engineering, Inc.

Mark.	Description	Date	Appr.

SUBMITTED BY:
Chief, Civil Design Section
APPROVAL RECOMMENDED BY:
Chief, Engineering Branch
APPROVED BY:
Chief, Engineering & Technical Services Division

DESIGNED BY: DT
DATE: 05/JUL/2017
SHEET NO. 10 of 32
CHECKED BY: DJ
DRAWING NO. 1004 71 46
DRAWN BY: AA

PREPARED UNDER THE DIRECTION OF
John C. Morrow
Lt Colonel, DISTRICT COMMANDER

CALIFORNIA
SANTA CLARA COUNTY
SOUTH SAN FRANCISCO BAY SHORELINE
REACH 1
CONSTRUCTION LIMIT LINE AND CURVE PLAN

Sheet reference number
G-010
10 OF 32

C:\pwworking\west01\d0156187\ 10047146G-010.dwg 30 Jun 2017 - 9:36am

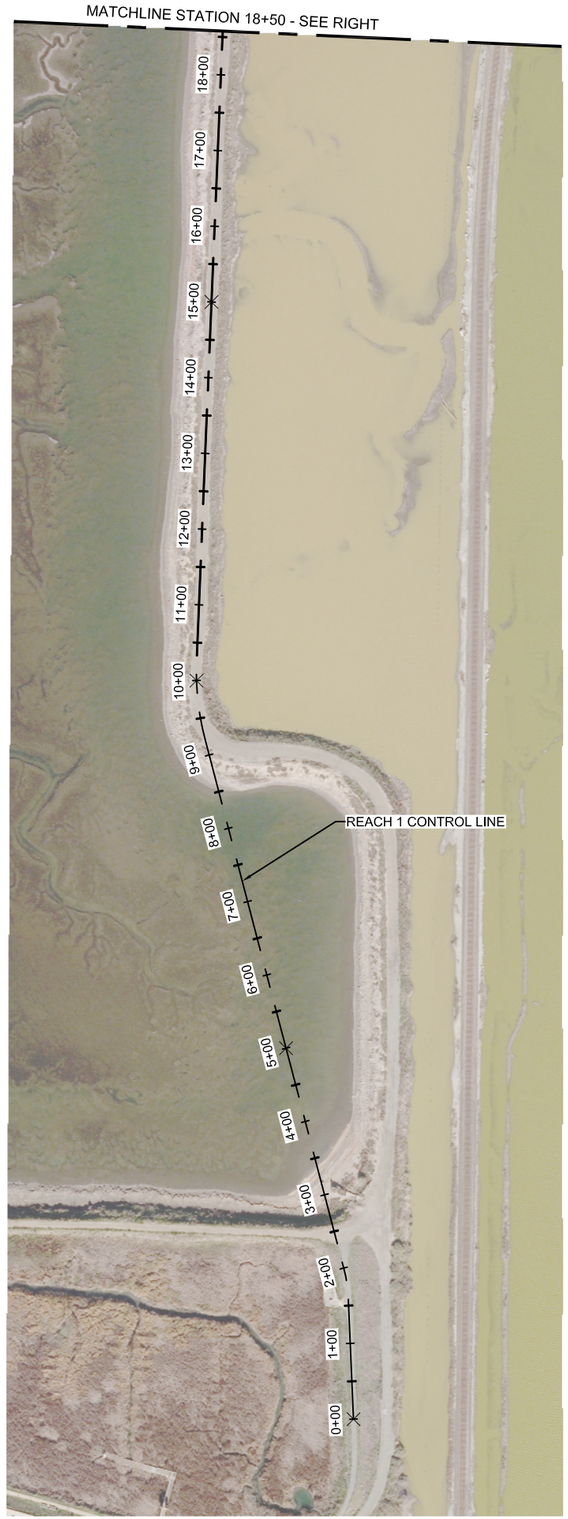

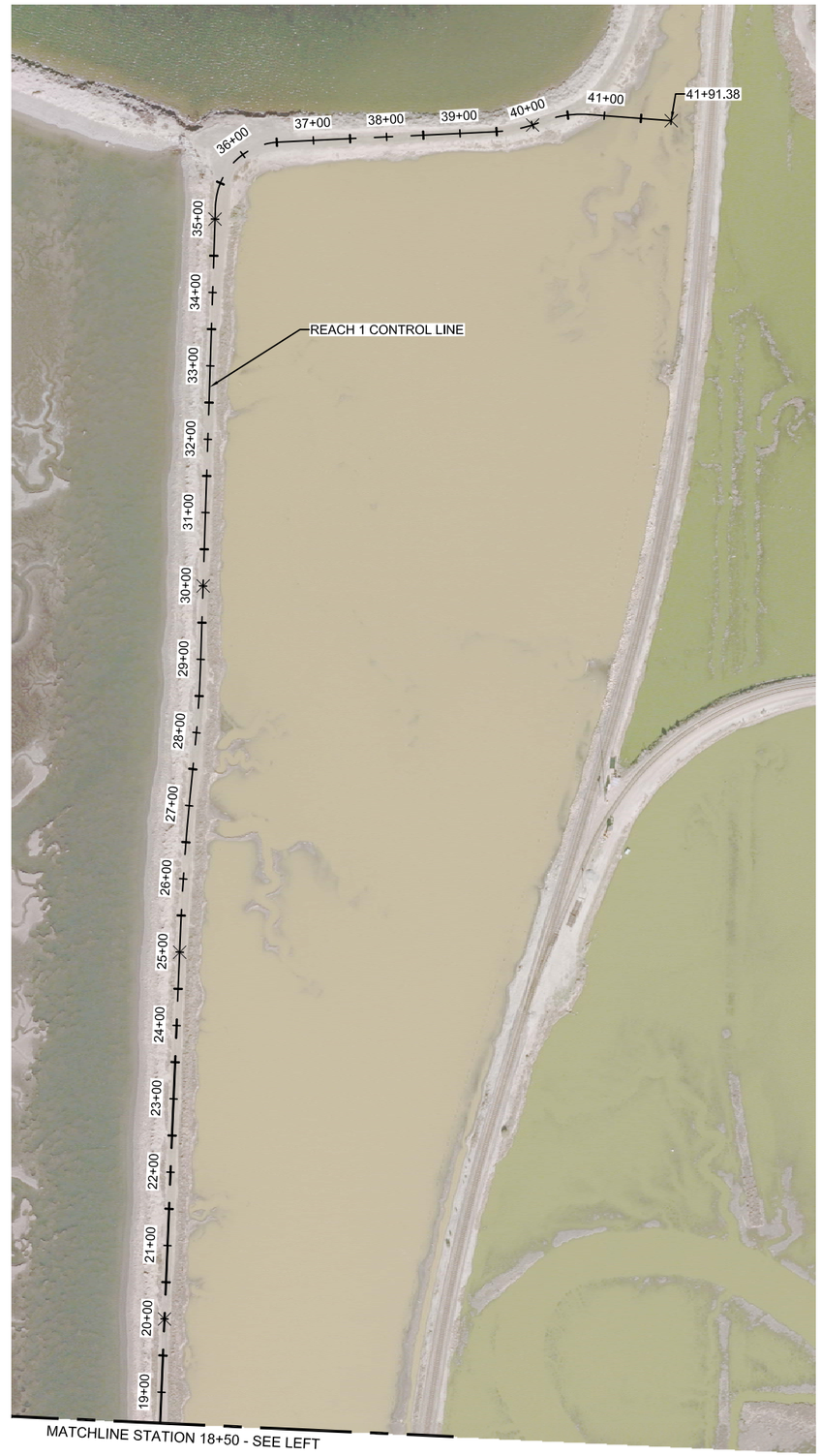

N

300' 150' 0 300'

SCALE : 1"=300'

NOTE:

1. INSTALL SURVEY MARKERS AFTER COMPLETION OF LEVEE CONSTRUCTION AT THE LEVEE CENTERLINE AND LANDSIDE HINGE EVERY 500 FT.

LEGEND

× SURVEY MARKERS

C / C-501

SURVEY MARKER TABLE		
STATION	NORTHING (FT)	EASTING (FT)
0+00	1982565.28	6132520.20
5+00	1983054.68	6132431.18
10+00	1983539.86	6132313.00
15+00	1984039.59	6132332.78
20+00	1984539.16	6132353.49
25+00	1985038.73	6132374.35
30+00	1985537.55	6132406.15
35+00	1986037.29	6132422.38
40+00	1986165.67	6132855.45
41+91.38	1986171.32	6133044.27

60% DESIGN
NOT FOR CONSTRUCTION

US Army Corps of Engineers
San Francisco District
1455 Market Street
San Francisco, CA 94103

HDR Engineering, Inc.

Mark.	Description	Date	Appr.

DESIGNED BY: DT | CHECKED BY: DJ | DRAWN BY: AA
DATE: 05/JUL/2017 | SHEET NO. 11 of 32 | DRAWING NO. 1004 71 46

SUBMITTED BY: Chief, Civil Design Section
APPROVAL RECOMMENDED BY: Chief, Engineering Branch
APPROVED BY: Chief, Engineering & Technical Services Division

PREPARED UNDER THE DIRECTION OF
John C. Morrow
Lt Colonel, DISTRICT COMMANDER

CALIFORNIA
SANTA CLARA COUNTY
SOUTH SAN FRANCISCO BAY SHORELINE
REACH 1
SURVEY MARKERS

Sheet reference number
IN-001
11 OF 32

C:\pwworking\west01\d0156187\ 10047146IN-001.dwg 27 Jun 2017 - 6:21pm

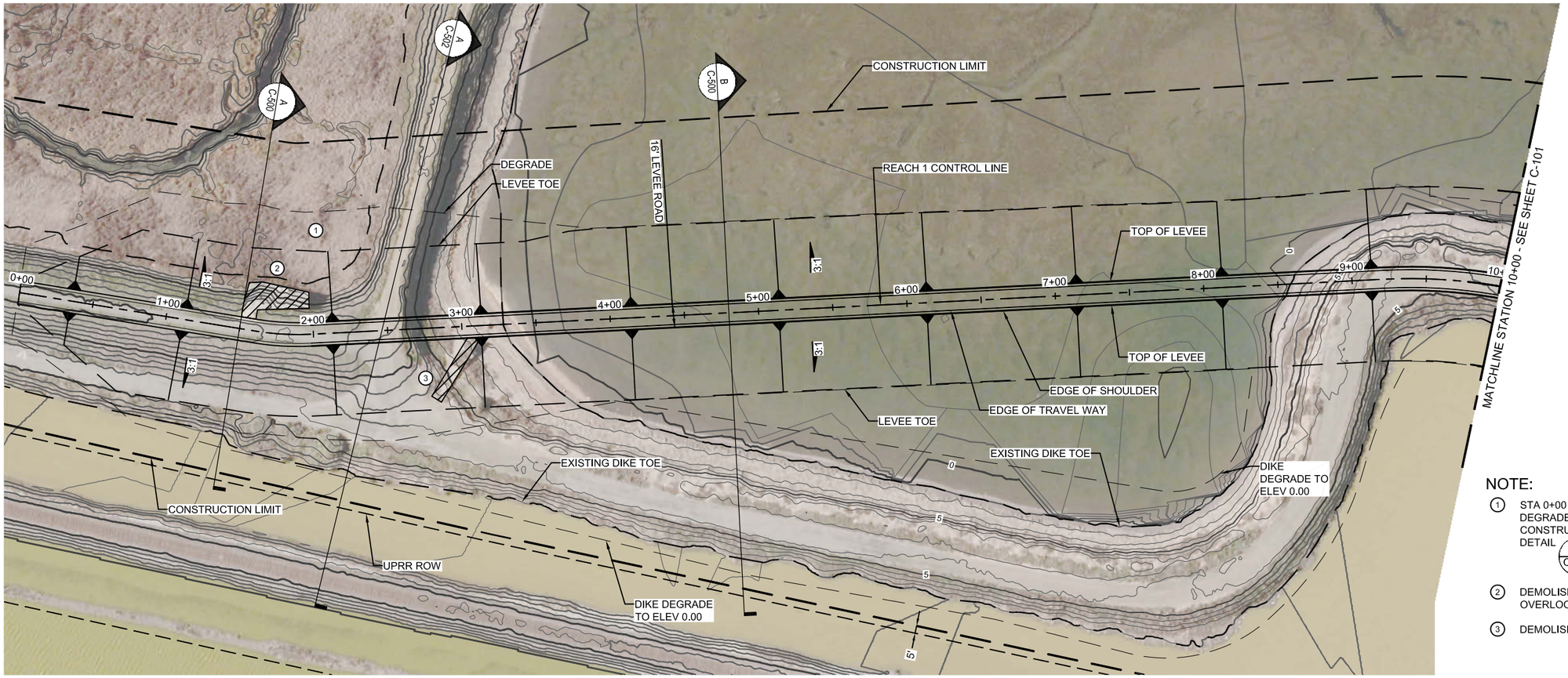

NOTE:

1. STA 0+00 TO 3+00, OFFSET 80 FT: BEGIN DEGRADE OF EXISTING GROUND FOR CONSTRUCTION OF LEVEE. SEE DETAIL A/C-500
2. DEMOLISH EXISTING CATWALK AND OVERLOOK
3. DEMOLISH EXISTING STRUCTURE

PLAN

SCALE: 1"=40'

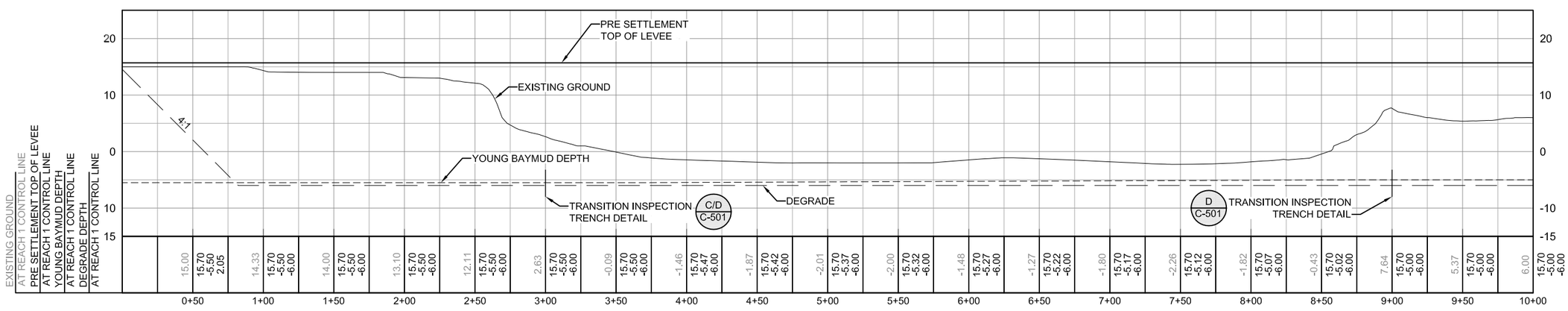

PROFILE

HORZ SCALE: 1"=40'
VERT SCALE: 1"=10'

60% DESIGN
NOT FOR CONSTRUCTION

US Army Corps of Engineers
San Francisco District
1455 Market Street
San Francisco, CA 94103

HDR Engineering, Inc.

Mark.	Description	Date	Appr.

SUBMITTED BY: Chief, Civil Design Section
DESIGNED BY: DT
CHECKED BY: DJ
DRAWN BY: AA
APPROVAL RECOMMENDED BY: Chief, Engineering Branch
DATE: 05JUL2017
SHEET NO. 12 of 32
DRAWING NO. 1004 71 46
APPROVED BY: Chief, Engineering & Technical Services Division
PREPARED UNDER THE DIRECTION OF John C. Morrow Lt Colonel, DISTRICT COMMANDER

SANTA CLARA COUNTY CALIFORNIA
SOUTH SAN FRANCISCO BAY SHORELINE
REACH 1
PLAN AND PROFILE
STA 0+00 TO STA 10+00

Sheet reference number
C-100
12 OF 32

C:\pwworking\west01\d0156187\ 10047146C-100.dwg 30 Jun 2017 - 11:40am

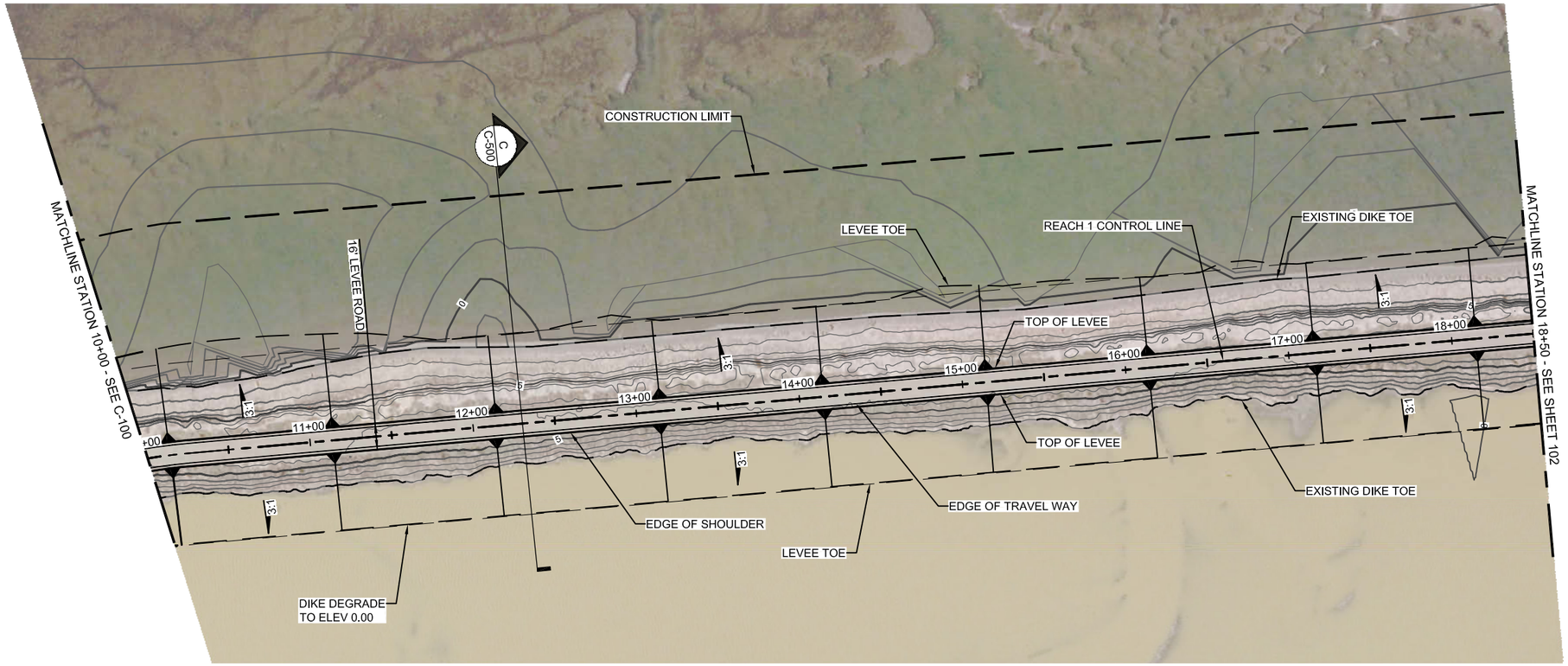

PLAN

SCALE: 1"=40'

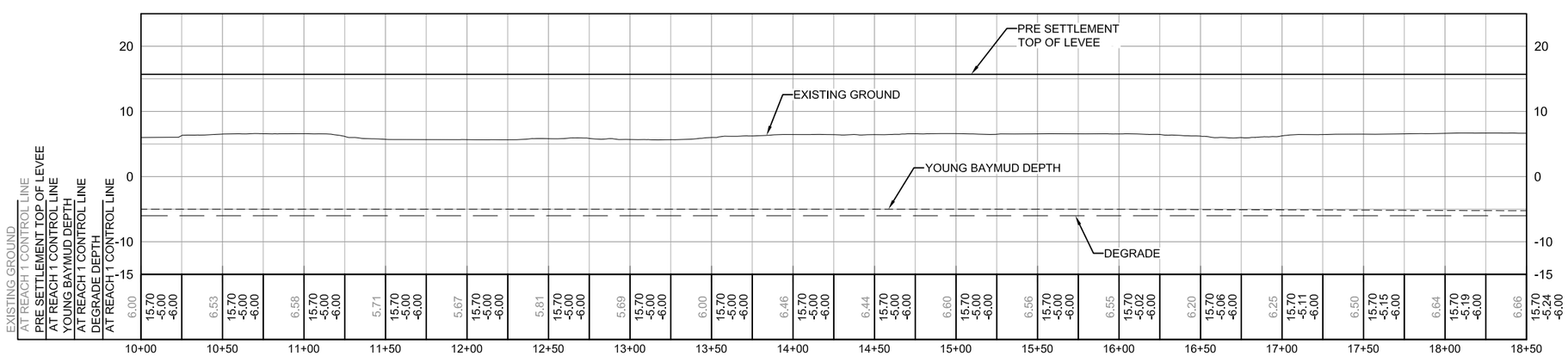

PROFILE

HORZ SCALE: 1"=40'
VERT SCALE: 1"=10'

H = 1"=40'

V = 1"=10'

60% DESIGN
NOT FOR CONSTRUCTION

US Army Corps of Engineers
San Francisco District
1455 Market Street
San Francisco, CA 94103

HDR Engineering, Inc.

Mark.	Description	Date	Appr.

DESIGNED BY: DT	CHECKED BY: DJ	DRAWN BY: AA	
DATE: 05/JUL/2017	SHEET NO. 13 of 32	DRAWING NO. 1004 71	46

PREPARED UNDER THE DIRECTION OF
John C. Morrow
Lt Colonel, DISTRICT COMMANDER

SUBMITTED BY: Chief, Civil Design Section
APPROVAL RECOMMENDED BY: Chief, Engineering Branch
APPROVED BY: Chief, Engineering & Technical Services Division

SANTA CLARA COUNTY CALIFORNIA
SOUTH SAN FRANCISCO BAY SHORELINE
REACH 1

PLAN AND PROFILE
STA 10+00 TO STA 18+50

Sheet reference number
C-101
13 OF 32

C:\pwworking\west01\d0156187\ 10047146C-101.dwg 30 Jun 2017 - 11:55am

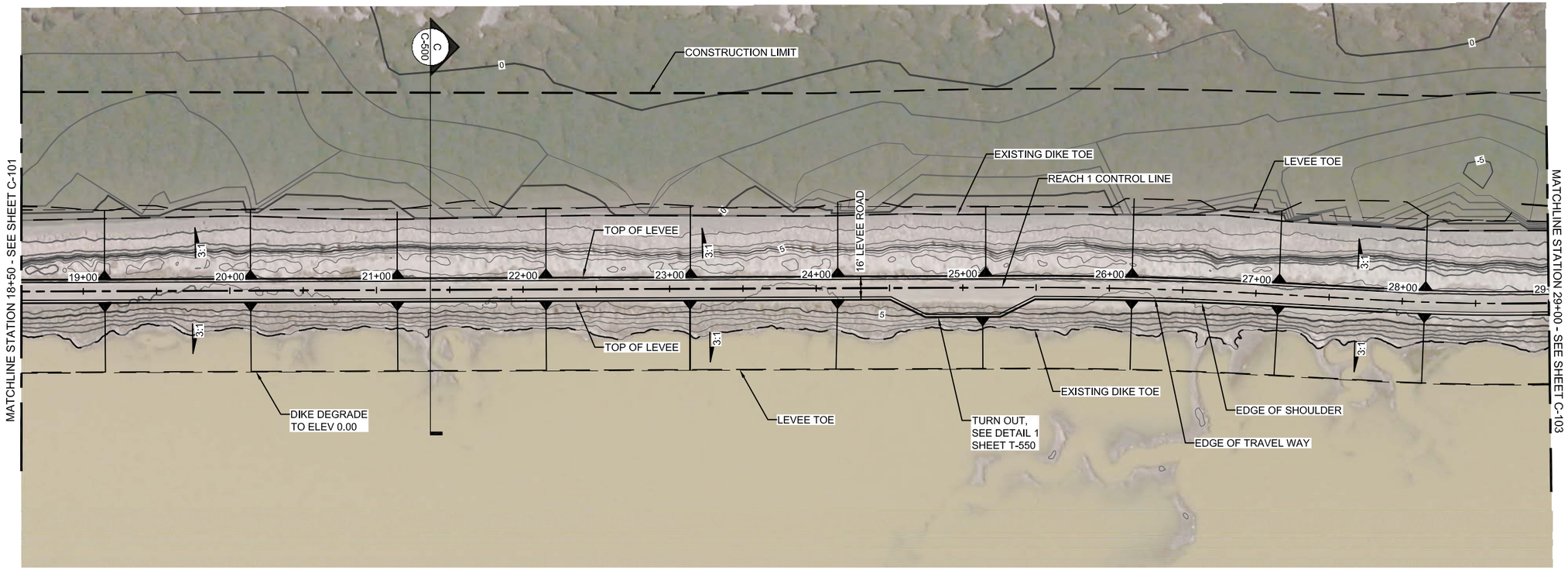

PLAN

SCALE: 1"=40'

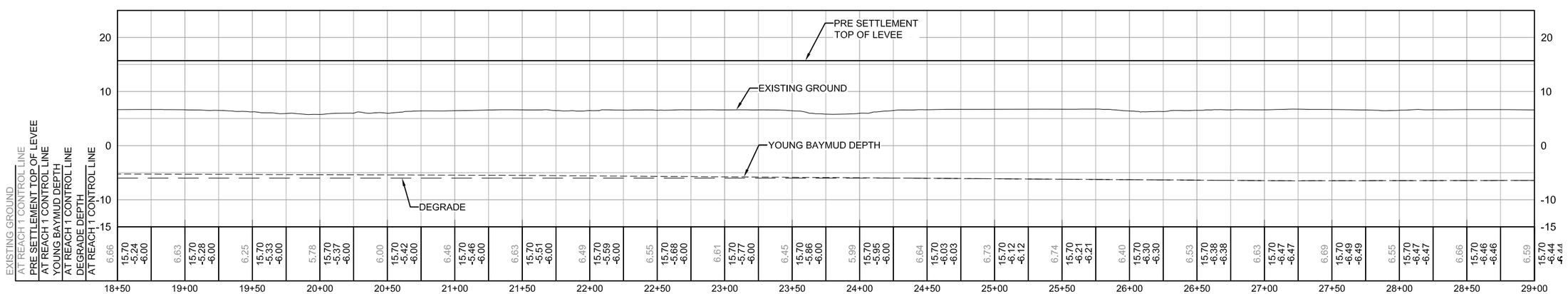

PROFILE

HORZ SCALE: 1"=40'
VERT SCALE: 1"=10'

60% DESIGN
NOT FOR CONSTRUCTION

N

40' 20' 0 40'
H = 1"=40'

8' 4' 0
V = 1"=10'

US Army Corps of Engineers
San Francisco District
1455 Market Street
San Francisco, CA 94103

HDR Engineering, Inc.

Mark.	Description	Date	Appr.

DESIGNED BY: DT
CHECKED BY: DJ
DRAWN BY: AA
DATE: 05/JUL/2017
SHEET NO. 14 of 32
DRAWING NO. 1004 71 46

SUBMITTED BY: Chief, Civil Design Section
APPROVAL RECOMMENDED BY: Chief, Engineering Branch
APPROVED BY: Chief, Engineering & Technical Services Division

PREPARED UNDER THE DIRECTION OF
John C. Morrow
Lt Colonel, DISTRICT COMMANDER

SANTA CLARA COUNTY CALIFORNIA
SOUTH SAN FRANCISCO BAY SHORELINE
REACH 1

PLAN AND PROFILE
STA 18+50 TO STA 29+00

Sheet reference number
C-102
14 OF 32

C:\pwworking\west01\d0156187\ 10047146C-102.dwg 30 Jun 2017 - 12:06pm

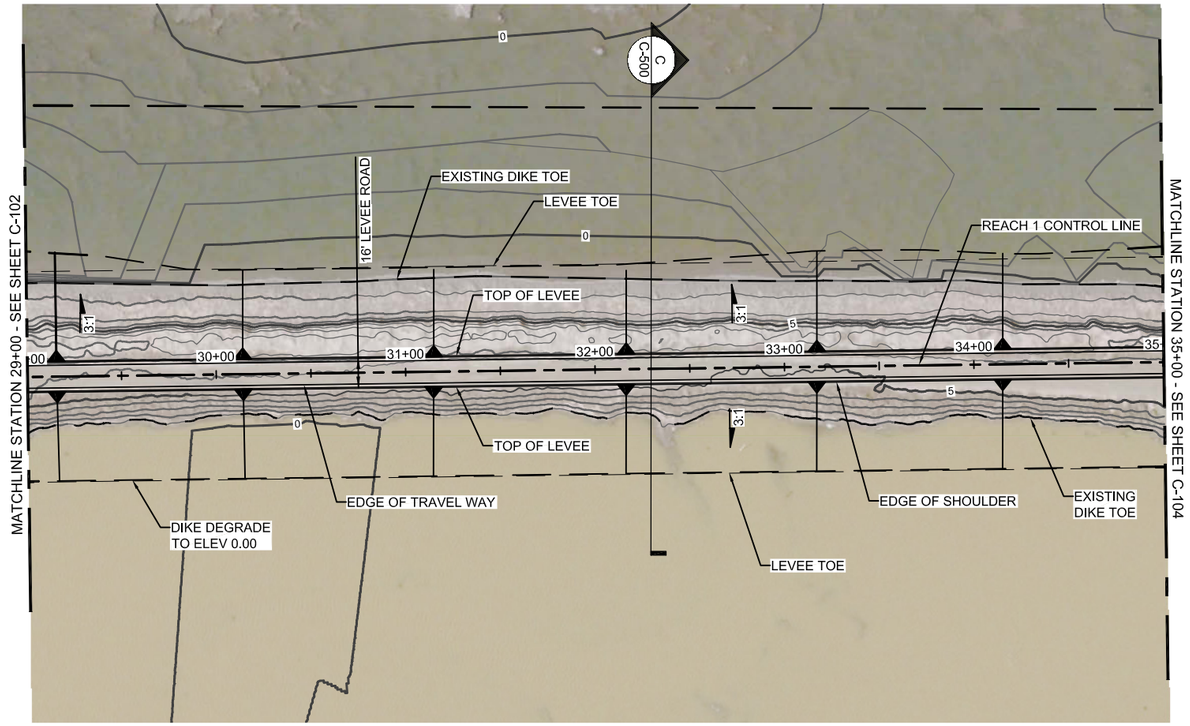

PLAN

SCALE: 1"=40'

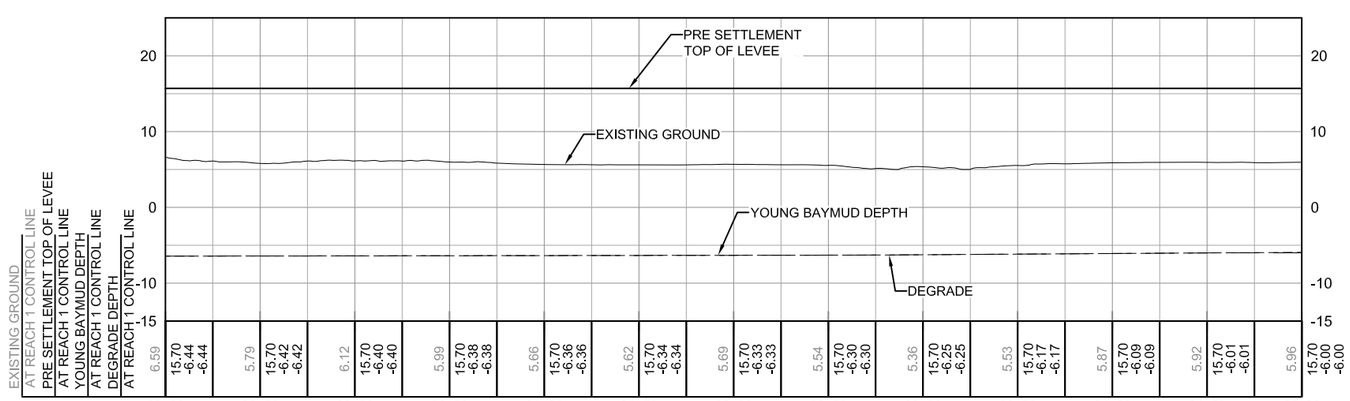

PROFILE

HORZ SCALE: 1"=40'
VERT SCALE: 1"=10'

N

40' 20' 0 40'
H = 1"=40'
8' 4' 0
V = 1"=10'

60% DESIGN
NOT FOR CONSTRUCTION

US Army Corps of Engineers
San Francisco District
1455 Market Street
San Francisco, CA 94103

HDR Engineering, Inc.

Mark.	Description	Date	Appr.

DESIGNED BY: DT | CHECKED BY: DJ | DRAWN BY: AA
DATE: 05/JUL/2017 | SHEET NO. 15 of 32 | DRAWING NO. 1004 71 46

SUBMITTED BY:
Chief, Civil Design Section
APPROVAL RECOMMENDED BY:
Chief, Engineering Branch
APPROVED BY:
Chief, Engineering & Technical Services Division

PREPARED UNDER THE DIRECTION OF
John C. Morrow
Lt Colonel, DISTRICT COMMANDER

SANTA CLARA COUNTY CALIFORNIA
SOUTH SAN FRANCISCO BAY SHORELINE
REACH 1
PLAN AND PROFILE
STA 29+00 TO STA 35+00

Sheet reference number
C-103
15 OF 32

C:\pwworking\west01\d0156187\ 10047146C-103.dwg 30 Jun 2017 - 12:24pm

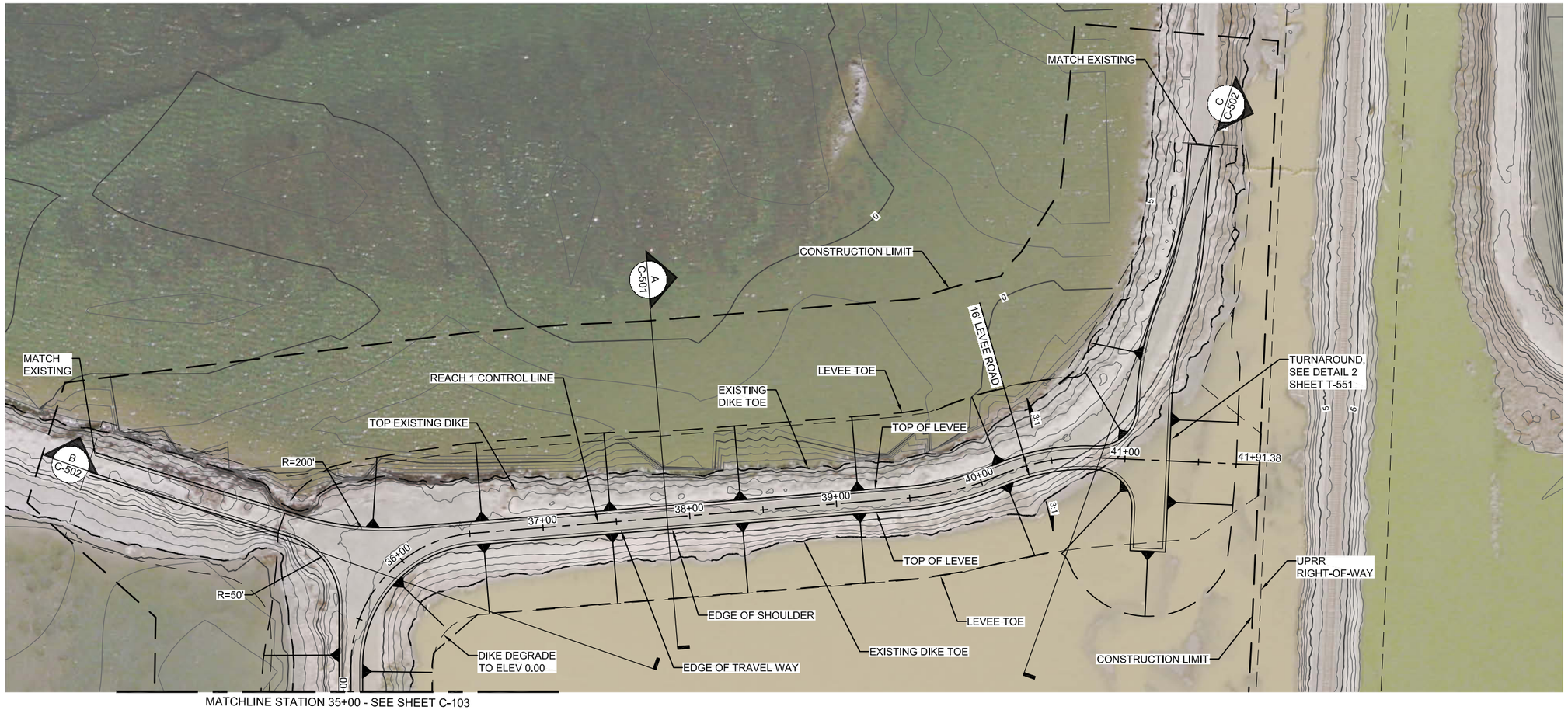

PLAN - LEVEE TERMINUS

SCALE: 1"=40'

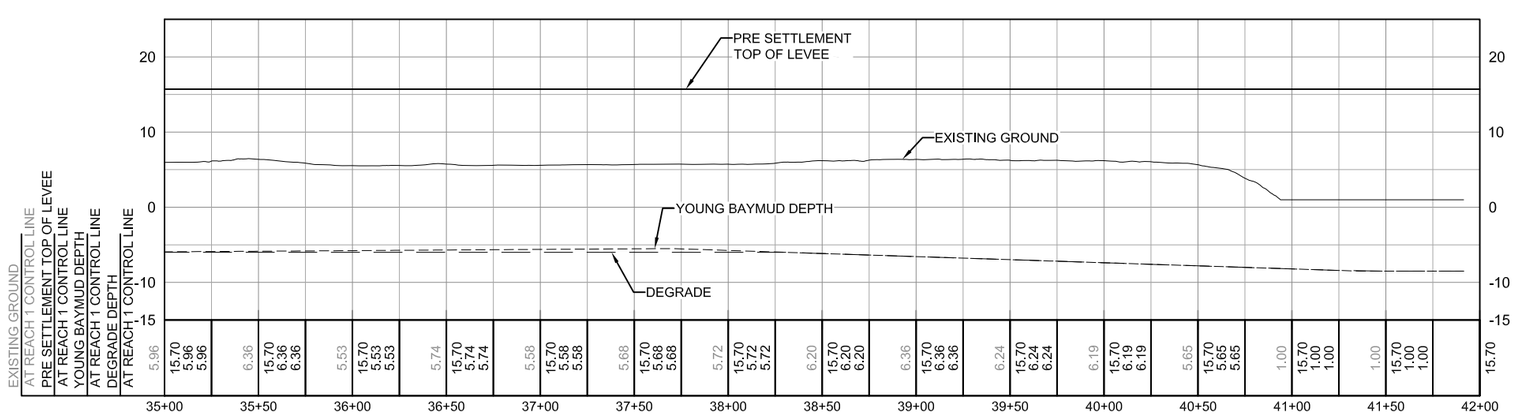

PROFILE

HORZ SCALE: 1"=40'
VERT SCALE: 1"=10'

N

40' 20' 0 40'
H = 1"=40'

8' 4' 0
V = 1"=10'

60% DESIGN
NOT FOR CONSTRUCTION

US Army Corps of Engineers
San Francisco District
1455 Market Street
San Francisco, CA 94103

HDR Engineering, Inc.

Mark.	Description	Date	Appr.

DESIGNED BY: DT
DATE: 05/JUL/2017
SHEET NO. 16 of 32
CHECKED BY: DJ
DRAWN BY: AA
DRAWING NO. 1004 71 46

PREPARED UNDER THE DIRECTION OF
John C. Morrow
Lt Colonel, DISTRICT COMMANDER

SUBMITTED BY:
Chief, Civil Design Section
APPROVAL RECOMMENDED BY:
Chief, Engineering Branch
APPROVED BY:
Chief, Engineering & Technical Services Division

SANTA CLARA COUNTY CALIFORNIA
SOUTH SAN FRANCISCO BAY SHORELINE
REACH 1
PLAN AND PROFILE - SCHEME 1 REACH 1 LEVEE TERMINUS
STA 35+00 TO STA 41+91.38

Sheet reference number
C-104
16 OF 32

C:\pwworking\west01\d0156187\.10047146C-104.dwg 30 Jun 2017 - 12:38pm

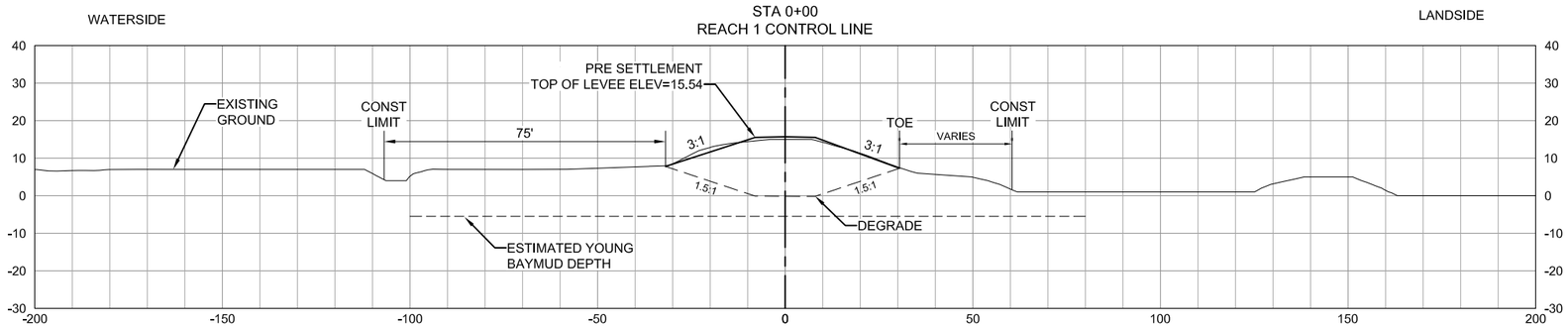

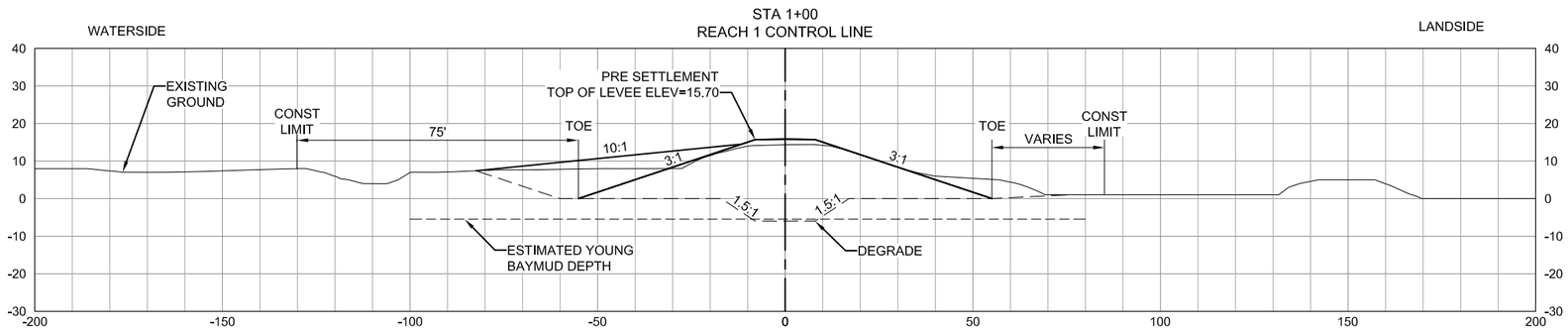

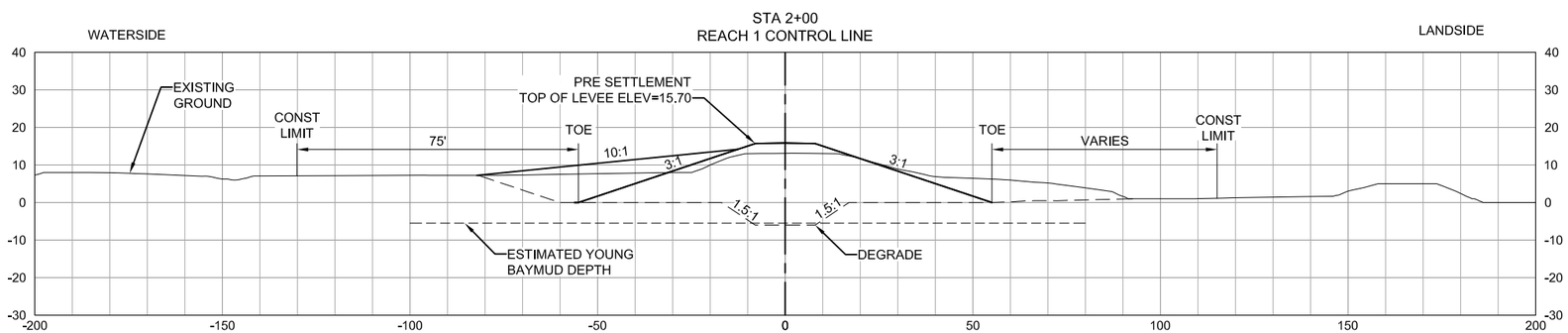

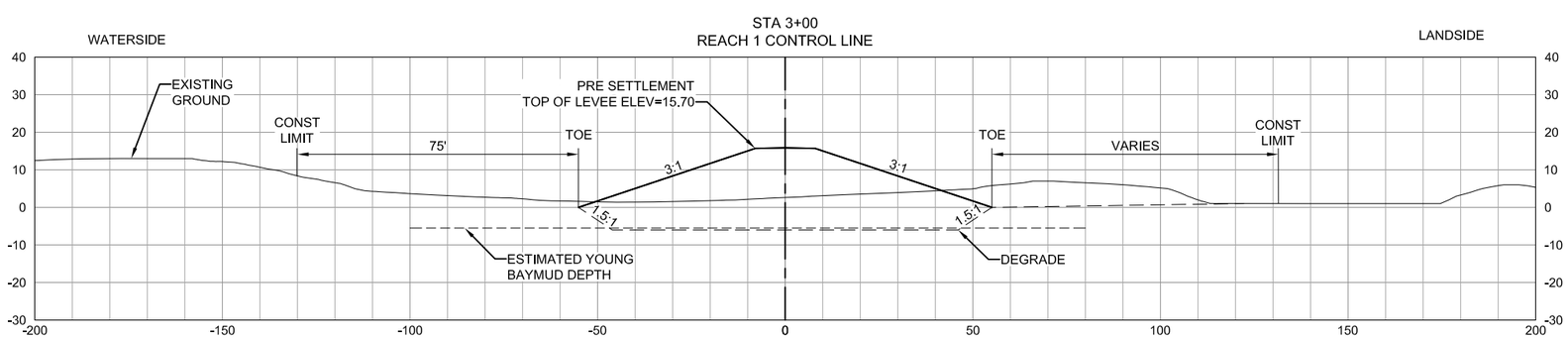

20' 10' 0 20'

SCALE = 1"=20'

NOTE:

1. OFFSET AND ELEVATIONS TO BE ADDED AT 90%.

60% DESIGN
NOT FOR CONSTRUCTION

US Army Corps of Engineers
San Francisco District
1455 Market Street
San Francisco, CA 94103

HDR Engineering, Inc.

Mark.	Description	Date	Appr.

DESIGNED BY: DT
CHECKED BY: DJ
DRAWN BY: AA
DATE: 05/JUL/2017
SHEET NO. 17 of 32
DRAWING NO. 1004 71 46

SUBMITTED BY: Chief, Civil Design Section
APPROVAL RECOMMENDED BY: Chief, Engineering Branch
APPROVED BY: Chief, Engineering & Technical Services Division

PREPARED UNDER THE DIRECTION OF
John C. Morrow
Lt Colonel, DISTRICT COMMANDER

SANTA CLARA COUNTY CALIFORNIA
SOUTH SAN FRANCISCO BAY SHORELINE
REACH 1
CROSS SECTIONS
STA 0+00 TO STA 3+00

Sheet reference number
C-300
17 OF 32

C:\pwworking\west01\d0156187\ 10047146C-300.dwg 30 Jun 2017 - 12:59pm

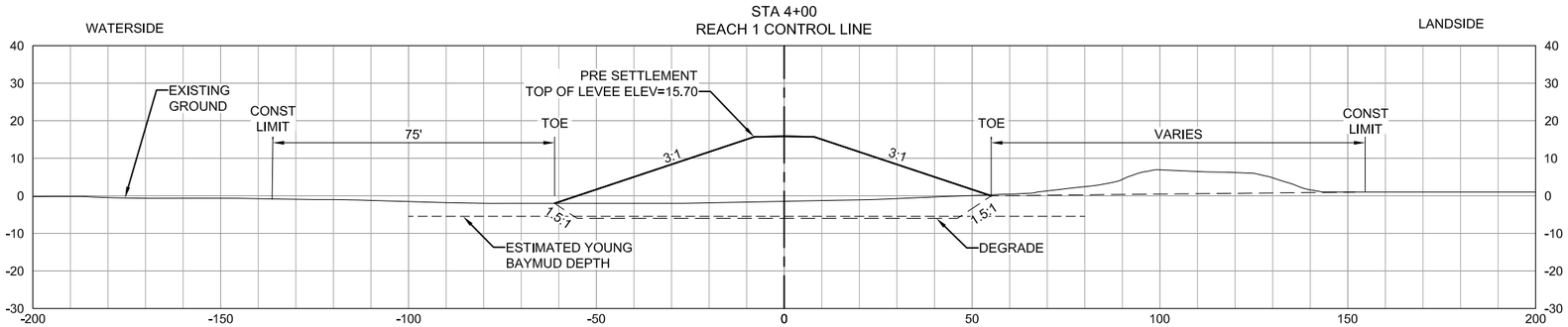

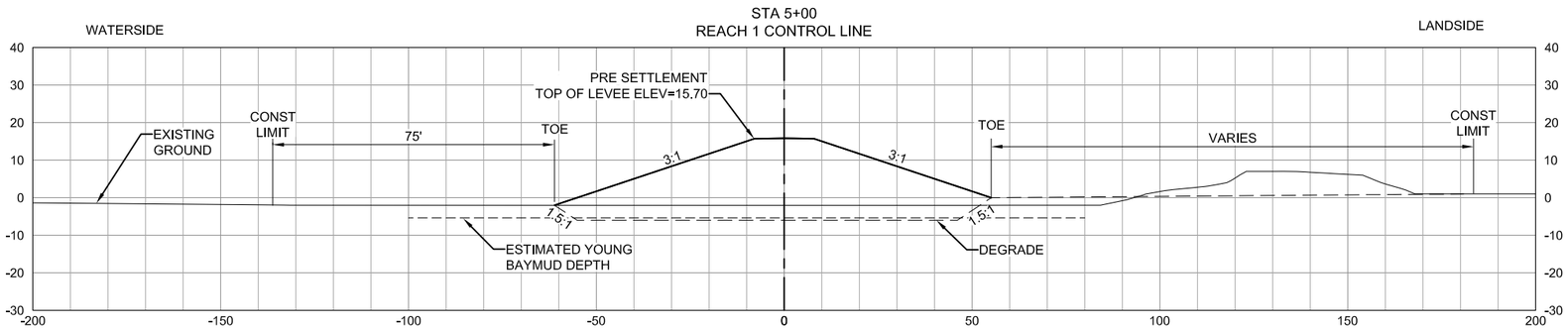

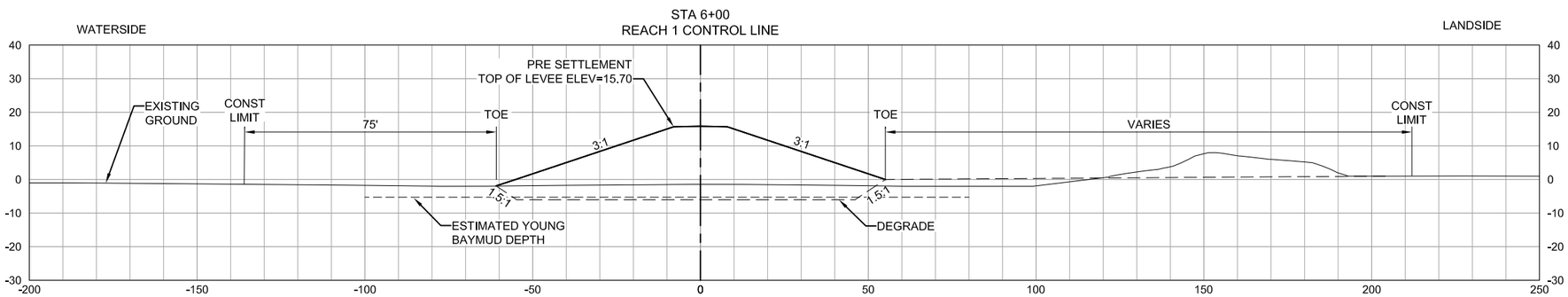

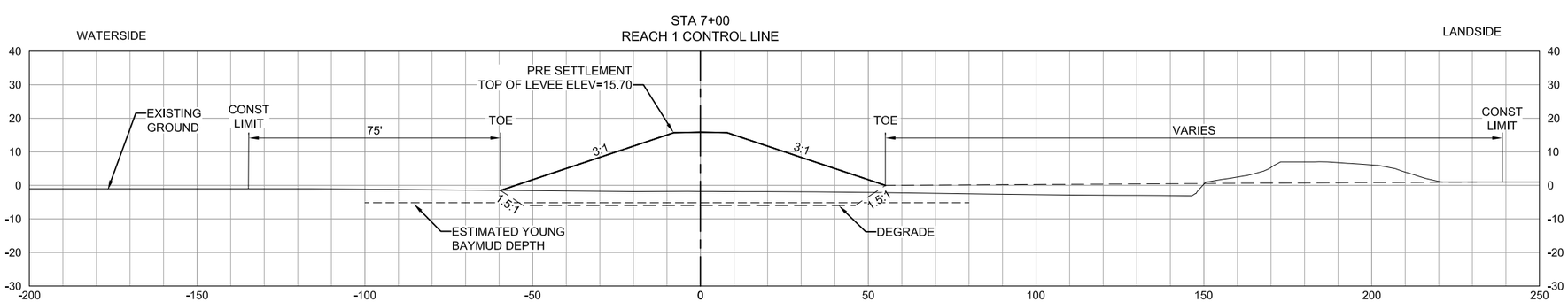

20' 10' 0 20'

SCALE = 1"=20'

NOTE:

1. OFFSET AND ELEVATIONS TO BE ADDED AT 90%.

60% DESIGN
NOT FOR CONSTRUCTION

US Army Corps of Engineers
San Francisco District
1455 Market Street
San Francisco, CA 94103

HDR Engineering, Inc.

Mark.	Description	Date	Appr.

DESIGNED BY: DT
DRAWN BY: AA
CHECKED BY: DJ
DATE: 05/JUL/2017
SHEET NO. 18 of 32
DRAWING NO. 1004 71 46

SUBMITTED BY: Chief, Civil Design Section
APPROVAL RECOMMENDED BY: Chief, Engineering Branch
APPROVED BY: Chief, Engineering & Technical Services Division

PREPARED UNDER THE DIRECTION OF
John C. Morrow
Lt Colonel, DISTRICT COMMANDER

SANTA CLARA COUNTY CALIFORNIA
SOUTH SAN FRANCISCO BAY SHORELINE
REACH 1
CROSS SECTIONS
STA 4+00 TO STA 7+00

Sheet reference number
C-301
18 OF 32

C:\pwworking\west01\d0156187\ 10047146C-301.dwg 30 Jun 2017 - 1:03pm

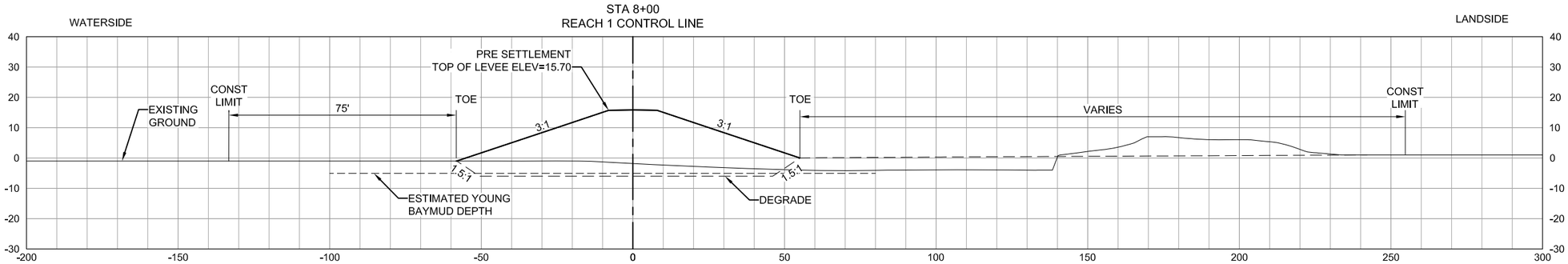

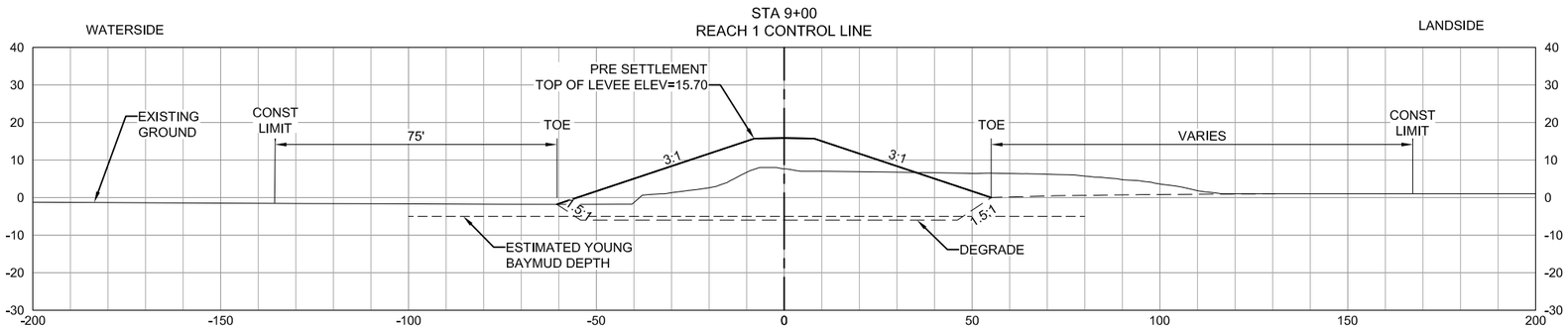

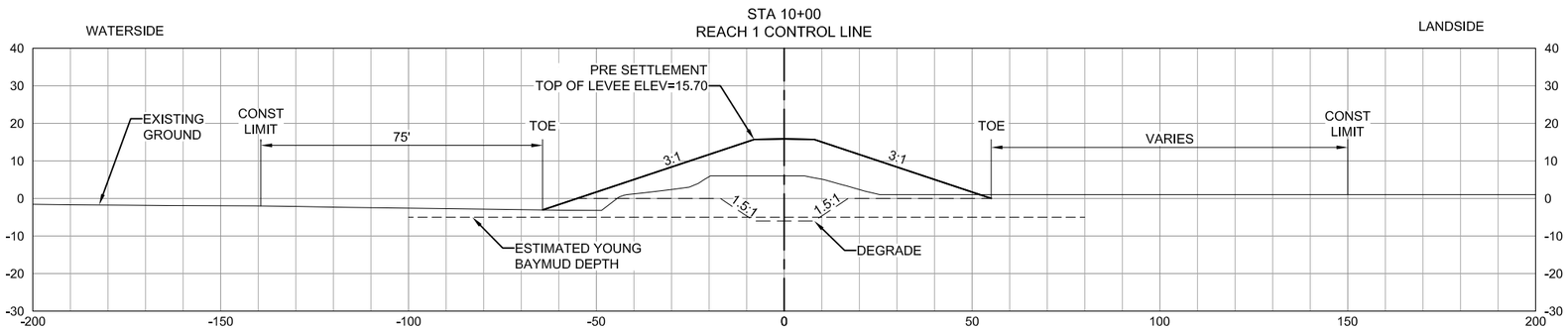

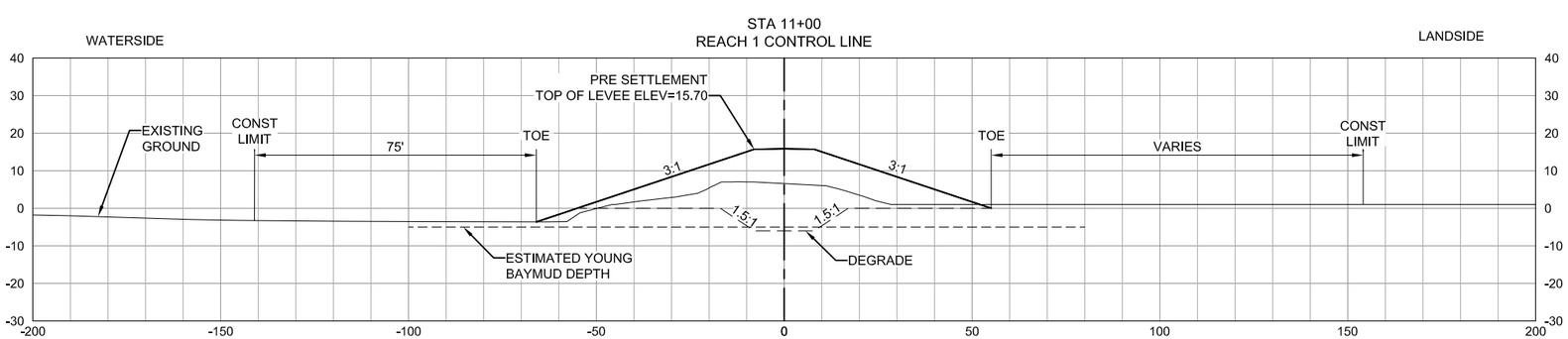

20' 10' 0 20'

SCALE = 1"=20'

NOTE:

1. OFFSET AND ELEVATIONS TO BE ADDED AT 90%.

60% DESIGN
NOT FOR CONSTRUCTION

US Army Corps of Engineers
San Francisco District
1455 Market Street
San Francisco, CA 94103

HDR Engineering, Inc.

Mark	Description	Date	Appr.

DESIGNED BY: DT
CHECKED BY: DJ
DRAWN BY: AA
DATE: 05/JUL/2017
SHEET NO. 19 of 32
DRAWING NO. 1004 71 46

SUBMITTED BY: Chief, Civil Design Section
APPROVAL RECOMMENDED BY: Chief, Engineering Branch
APPROVED BY: Chief, Engineering & Technical Services Division

PREPARED UNDER THE DIRECTION OF
John C. Morrow
Lt Colonel, DISTRICT COMMANDER

SANTA CLARA COUNTY CALIFORNIA
SOUTH SAN FRANCISCO BAY SHORELINE
REACH 1
CROSS SECTIONS
STA 8+00 TO STA 11+00

Sheet reference number
C-302
19 OF 32

C:\pwworking\west01\d0156187\ 10047146C-302.dwg 30 Jun 2017 - 1:05pm

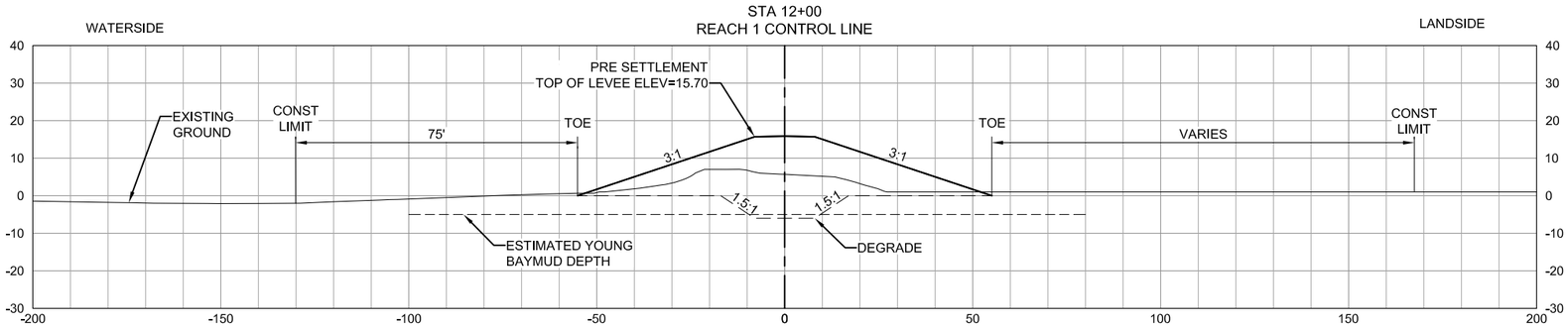

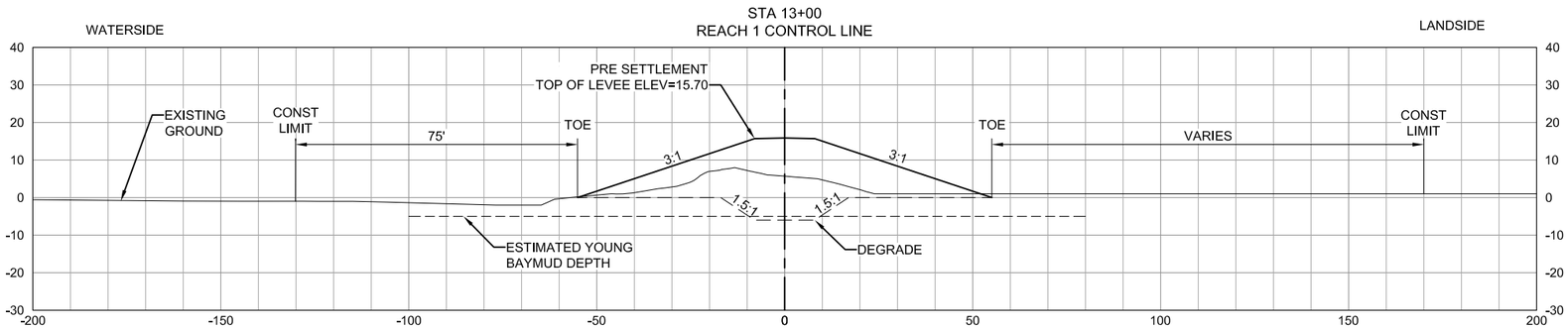

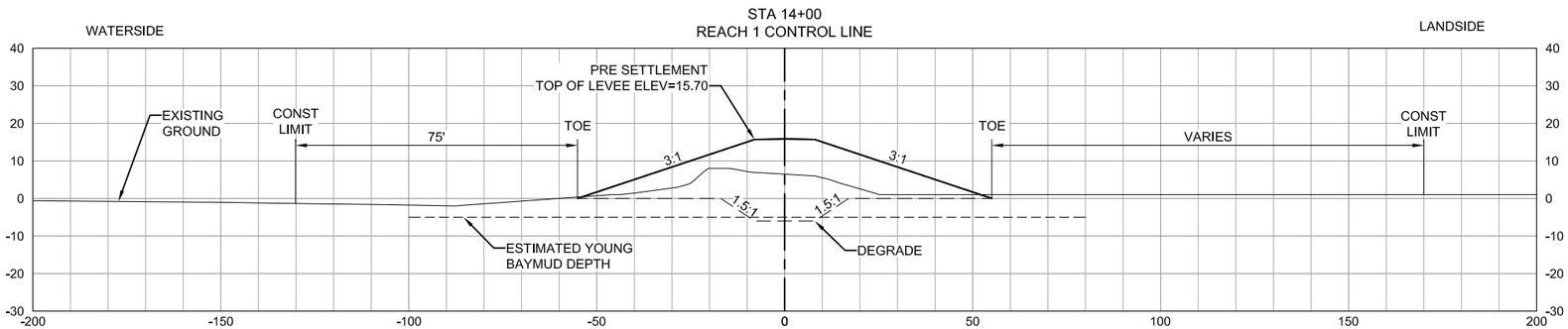

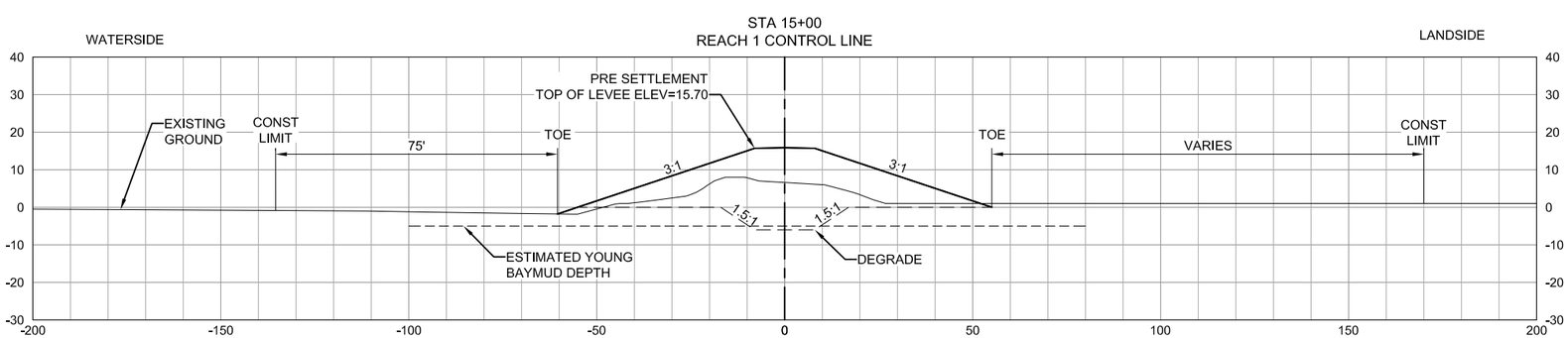

20' 10' 0 20'

SCALE = 1"=20'

NOTE:

1. OFFSET AND ELEVATIONS TO BE ADDED AT 90%.

60% DESIGN
NOT FOR CONSTRUCTION

US Army Corps of Engineers
San Francisco District
1455 Market Street
San Francisco, CA 94103

HDR Engineering, Inc.

Mark	Description	Date	Appr.

DESIGNED BY: DT
CHECKED BY: DJ
DRAWN BY: AA
DATE: 05/JUL/2017
SHEET NO. 20 of 32
DRAWING NO. 1004 71 46

SUBMITTED BY: Chief, Civil Design Section
APPROVAL RECOMMENDED BY: Chief, Engineering Branch
APPROVED BY: Chief, Engineering & Technical Services Division

PREPARED UNDER THE DIRECTION OF
John C. Morrow
Lt Colonel, DISTRICT COMMANDER

CALIFORNIA
SANTA CLARA COUNTY
SOUTH SAN FRANCISCO BAY SHORELINE
REACH 1

CROSS SECTIONS
STA 12+00 TO STA 15+00

Sheet reference number
C-303
20 OF 32

C:\pwworking\west01\d0156187\ 10047146C-303.dwg 30 Jun 2017 - 1:09pm

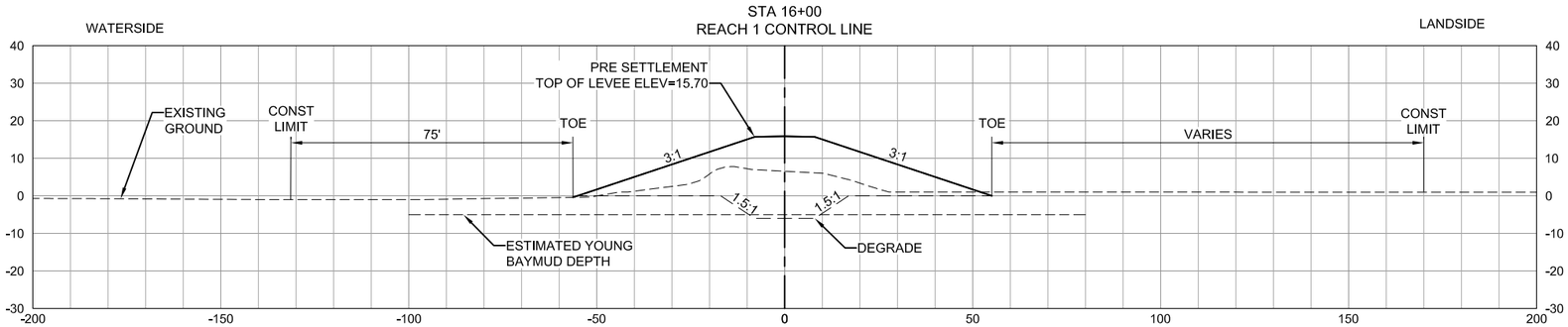

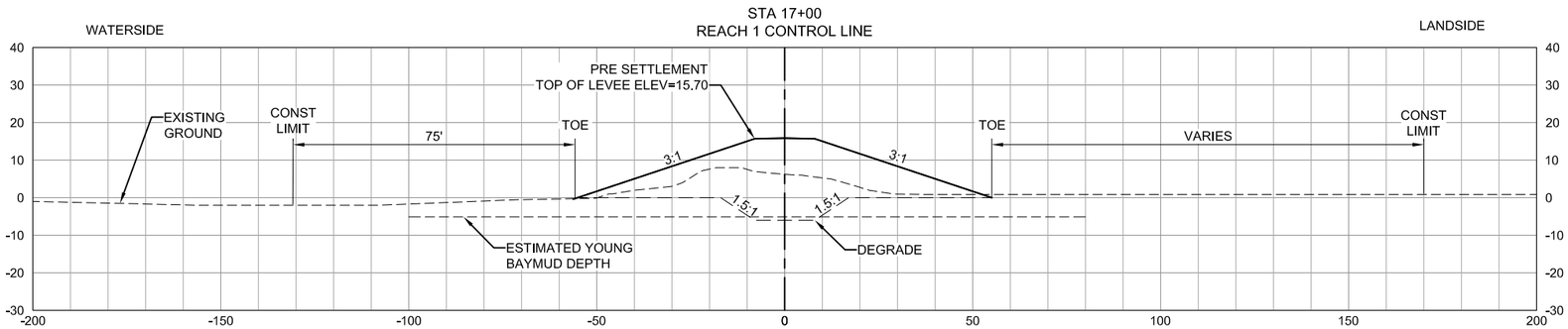

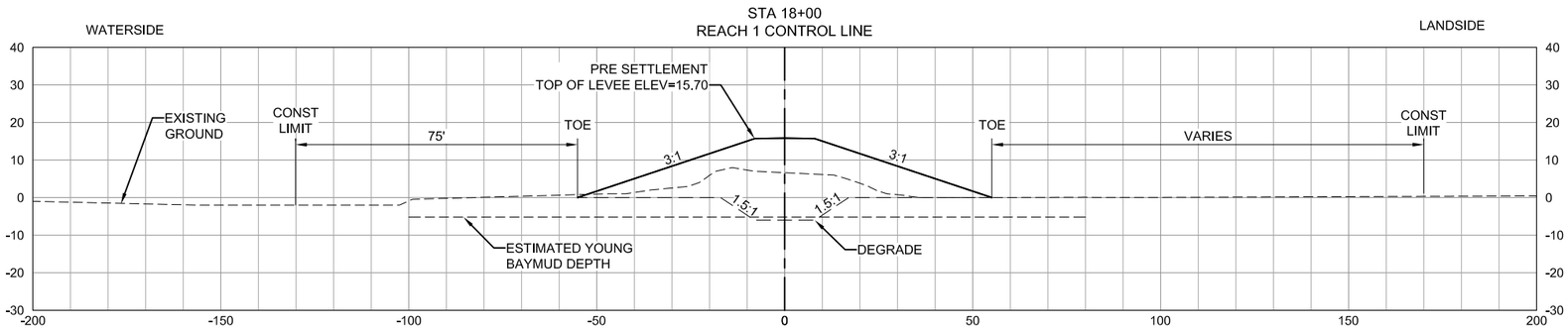

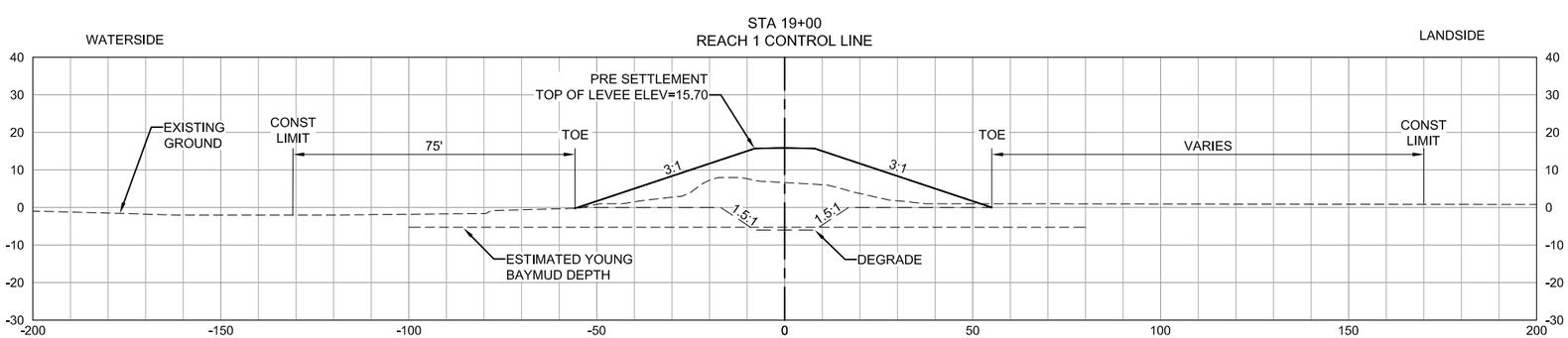

20' 10' 0 20'

SCALE = 1"=20'

NOTE:

1. OFFSET AND ELEVATIONS TO BE ADDED AT 90%.

60% DESIGN
NOT FOR CONSTRUCTION

US Army Corps of Engineers
San Francisco District
1455 Market Street
San Francisco, CA 94103

HDR Engineering, Inc.

Mark	Description	Date	Appr.

DESIGNED BY: DT
DRAWN BY: DJ
CHECKED BY: AA
DATE: 05/JUL/2017
SHEET NO. 21 of 32
DRAWING NO. 1004 71 46

SUBMITTED BY: Chief, Civil Design Section
APPROVAL RECOMMENDED BY: Chief, Engineering Branch
APPROVED BY: Chief, Engineering & Technical Services Division

PREPARED UNDER THE DIRECTION OF
John C. Morrow
Lt Colonel, DISTRICT COMMANDER

SANTA CLARA COUNTY CALIFORNIA
SOUTH SAN FRANCISCO BAY SHORELINE
REACH 1
CROSS SECTIONS
STA 16+00 TO STA 19+00

Sheet reference number
C-304
21 OF 32

C:\pwworking\west01\d0156187\ 10047146C-304.dwg 30 Jun 2017 - 1:13pm

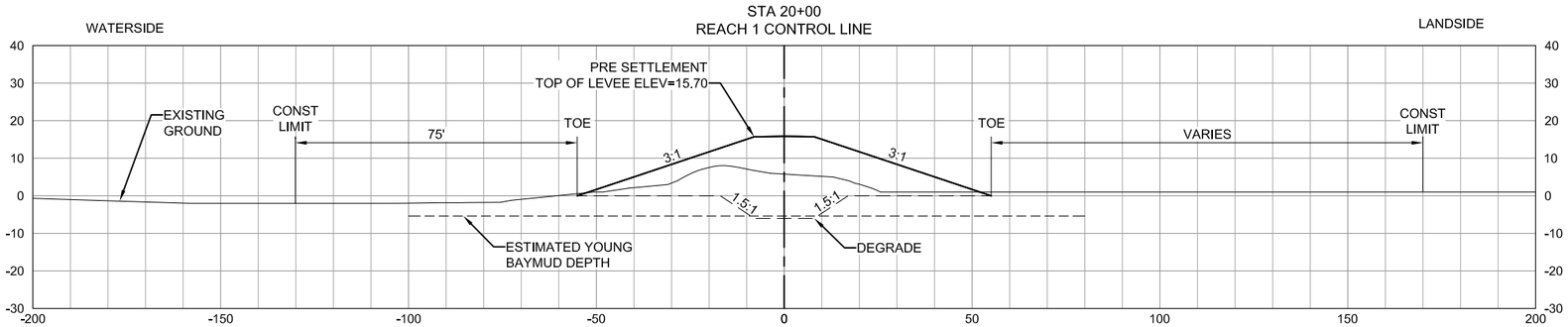

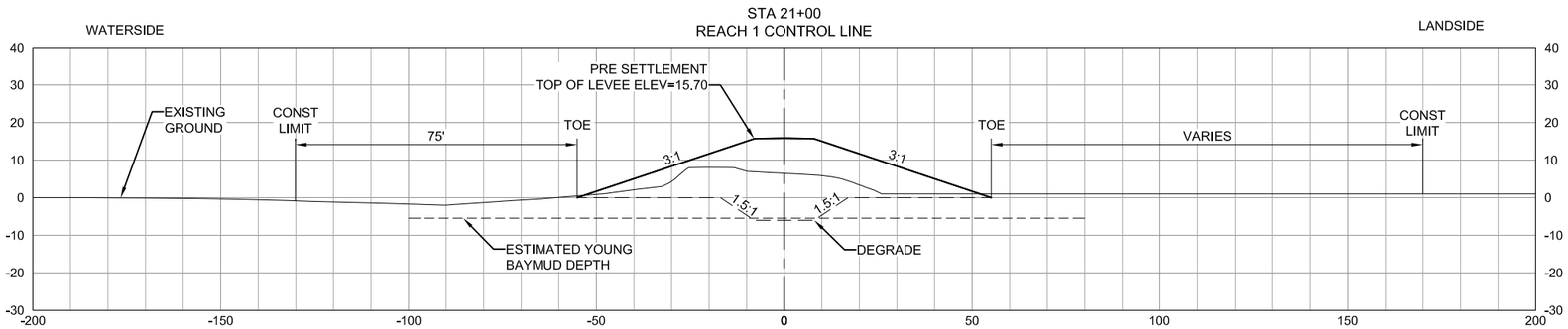

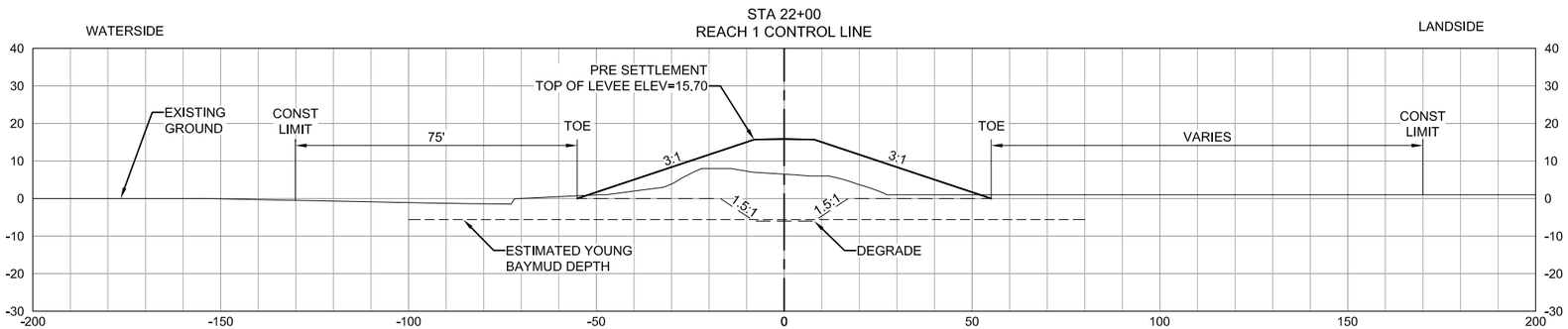

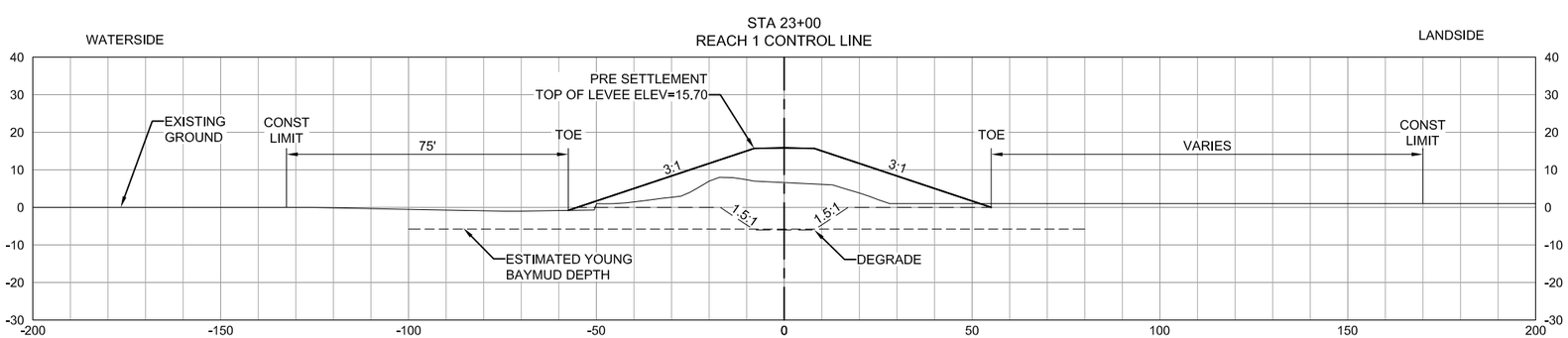

20' 10' 0 20'

SCALE = 1"=20'

NOTE:

1. OFFSET AND ELEVATIONS TO BE ADDED AT 90%.

60% DESIGN
NOT FOR CONSTRUCTION

US Army Corps of Engineers
San Francisco District
1455 Market Street
San Francisco, CA 94103

HDR Engineering, Inc.

Mark	Description	Date	Appr.

DESIGNED BY: DT
DRAWN BY: DJ
CHECKED BY: AA
DATE: 05/JUL/2017
SHEET NO. 22 of 32
DRAWING NO. 1004 71 46

SUBMITTED BY: Chief, Civil Design Section
APPROVAL RECOMMENDED BY: Chief, Engineering Branch
APPROVED BY: Chief, Engineering & Technical Services Division

PREPARED UNDER THE DIRECTION OF
John C. Morrow
Lt Colonel, DISTRICT COMMANDER

CALIFORNIA
SANTA CLARA COUNTY
SOUTH SAN FRANCISCO BAY SHORELINE
REACH 1
CROSS SECTIONS
STA 20+00 TO STA 23+00

Sheet reference number
C-305
22 OF 32

C:\pwworking\west01\d0156187\ 10047146C-305.dwg 30 Jun 2017 - 1:15pm

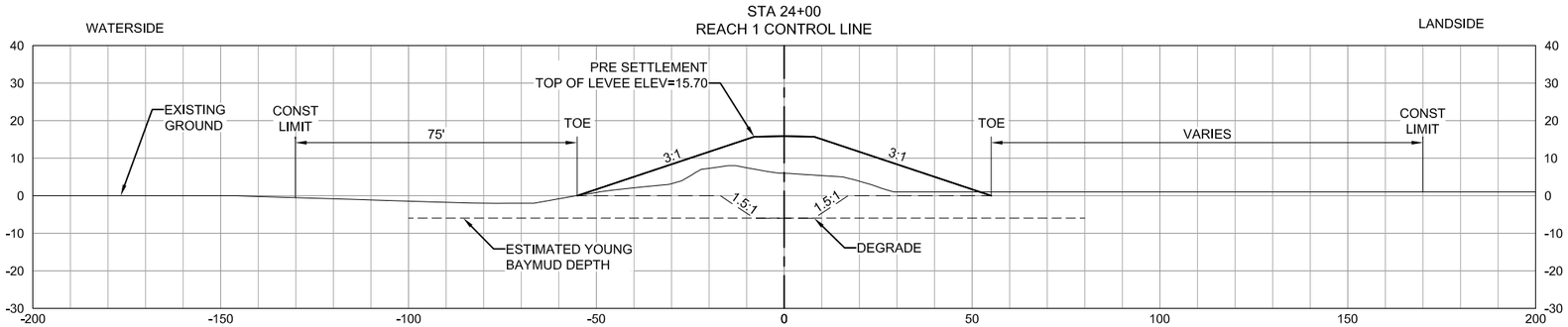

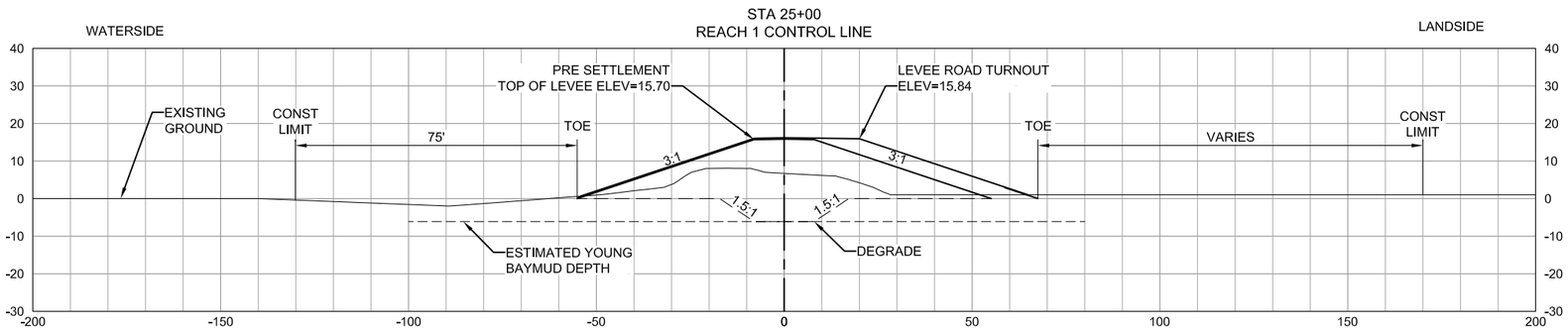

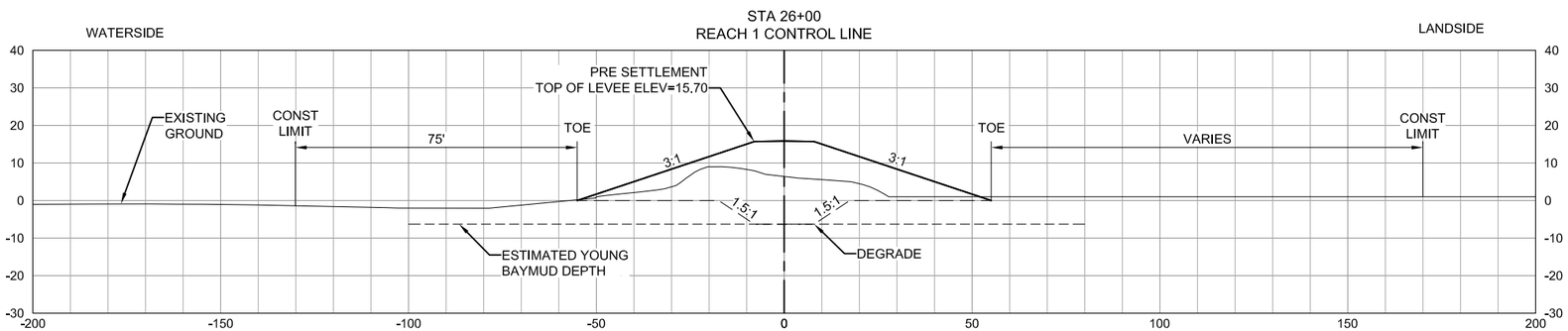

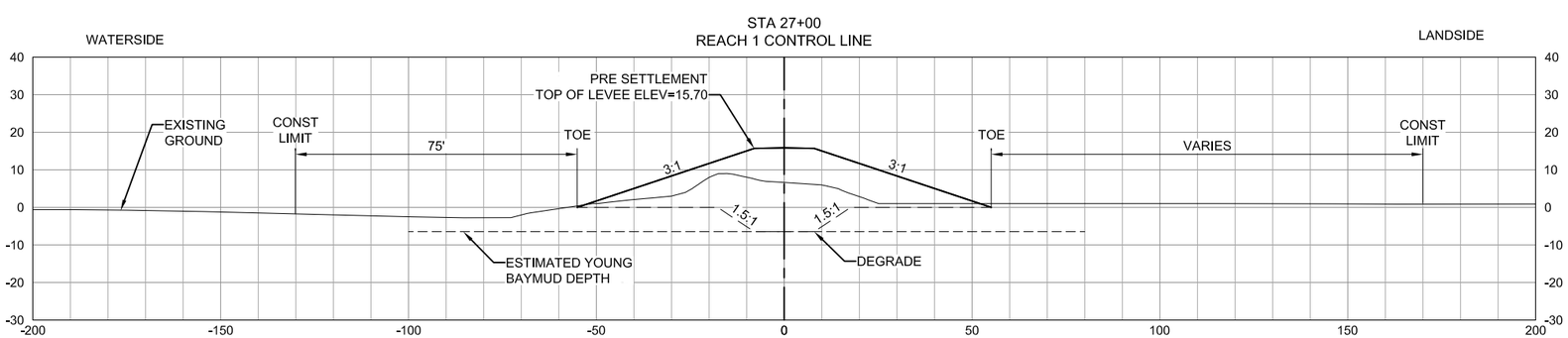

20' 10' 0 20'

SCALE = 1"=20'

NOTE:

1. OFFSET AND ELEVATIONS TO BE ADDED AT 90%.

60% DESIGN
NOT FOR CONSTRUCTION

US Army Corps of Engineers
San Francisco District
1455 Market Street
San Francisco, CA 94103

HDR Engineering, Inc.

Mark.	Description	Date	Appr.

DESIGNED BY: DT
DRAWN BY: DJ
CHECKED BY: AA
DATE: 05/JUL/2017
SHEET NO. 23 of 32
DRAWING NO. 1004 71 46

SUBMITTED BY: Chief, Civil Design Section
APPROVAL RECOMMENDED BY: Chief, Engineering Branch
APPROVED BY: Chief, Engineering & Technical Services Division

PREPARED UNDER THE DIRECTION OF
John C. Morrow
Lt Colonel, DISTRICT COMMANDER

CALIFORNIA
SANTA CLARA COUNTY
SOUTH SAN FRANCISCO BAY SHORELINE
REACH 1

CROSS SECTIONS
STA 24+00 TO STA 27+00

Sheet reference number
C-306
23 OF 32

C:\pwworking\west01\d0156187\ 10047146C-306.dwg 30 Jun 2017 - 1:17pm

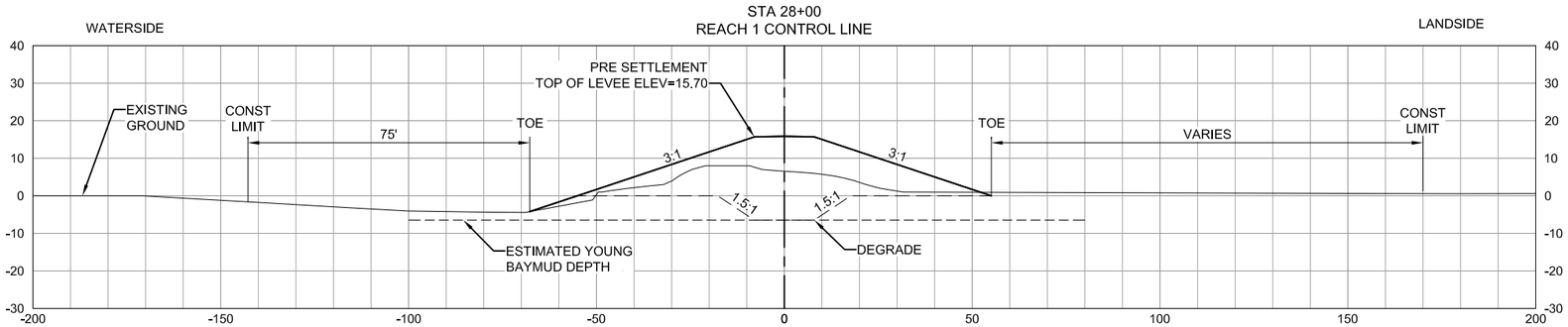

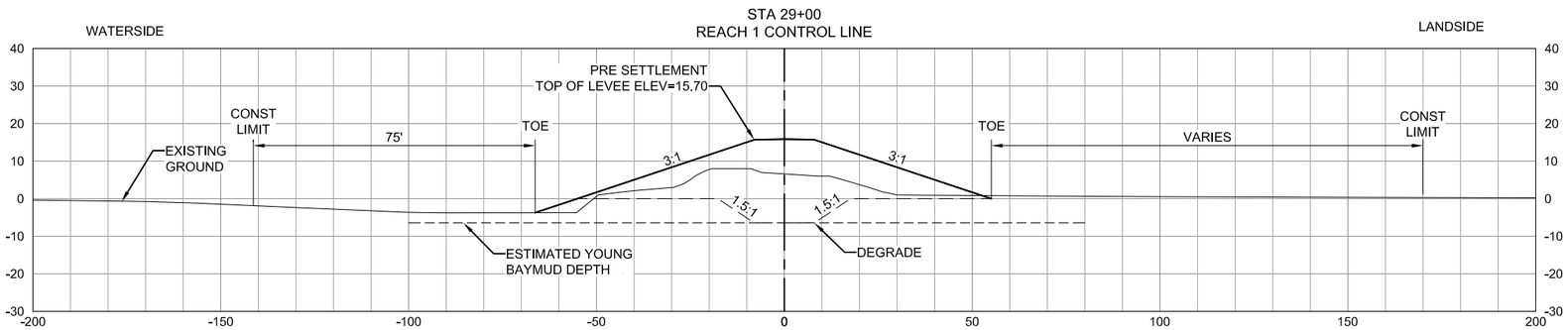

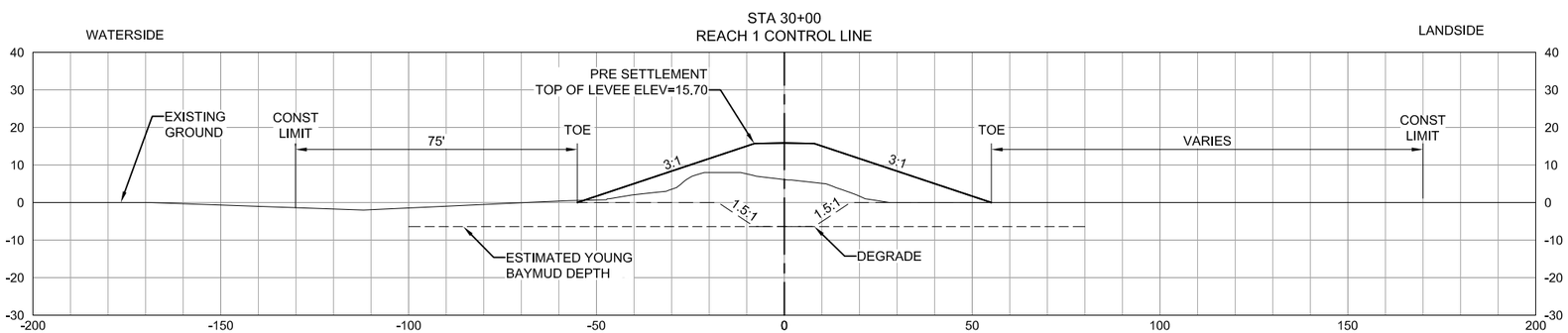

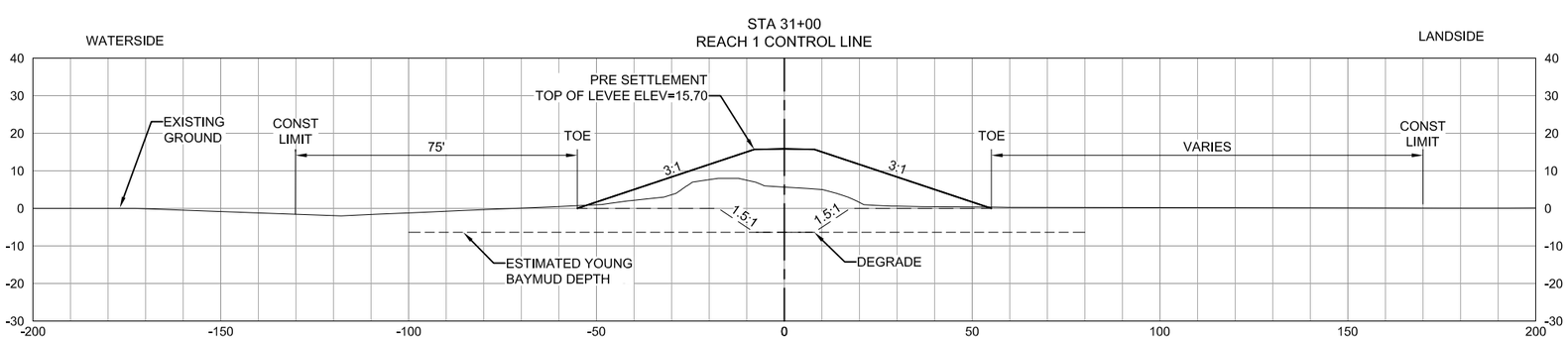

20' 10' 0 20'

SCALE = 1"=20'

NOTE:

1. OFFSET AND ELEVATIONS TO BE ADDED AT 90%.

60% DESIGN
NOT FOR CONSTRUCTION

US Army Corps of Engineers
San Francisco District
1455 Market Street
San Francisco, CA 94103

HDR Engineering, Inc.

Mark	Description	Date	Appr.

DESIGNED BY: DT
CHECKED BY: DJ
DRAWN BY: AA
DATE: 05/JUL/2017
SHEET NO. 24 of 32
DRAWING NO. 1004 71 46

SUBMITTED BY:
Chief, Civil Design Section
APPROVAL RECOMMENDED BY:
Chief, Engineering Branch
APPROVED BY:
Chief, Engineering & Technical Services Division

PREPARED UNDER THE DIRECTION OF
John C. Morrow
Lt Colonel, DISTRICT COMMANDER

CALIFORNIA
SANTA CLARA COUNTY
SOUTH SAN FRANCISCO BAY SHORELINE
REACH 1
CROSS SECTIONS
STA 28+00 TO STA 31+00

Sheet reference number
C-307
24 OF 32

C:\pwworking\west01\d0156187\ 10047146C-307.dwg 30 Jun 2017 - 1:19pm

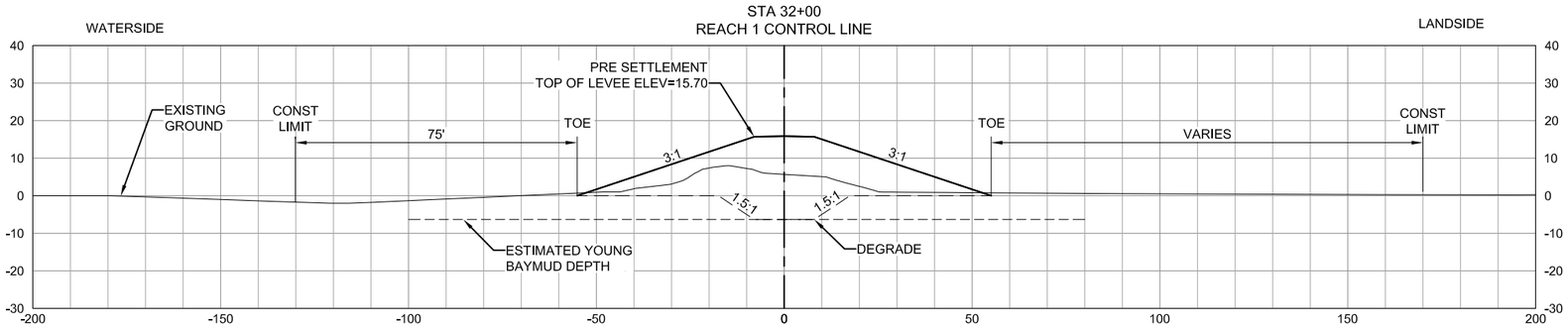

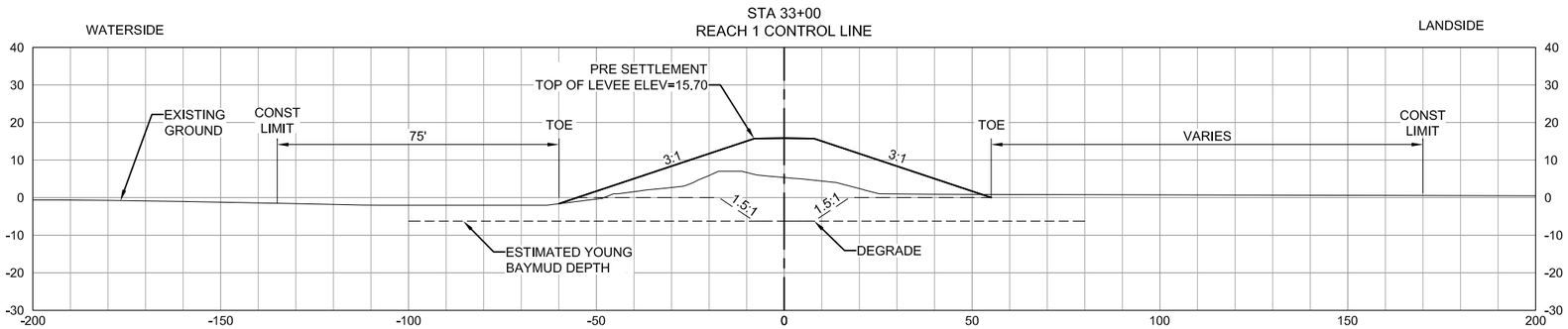

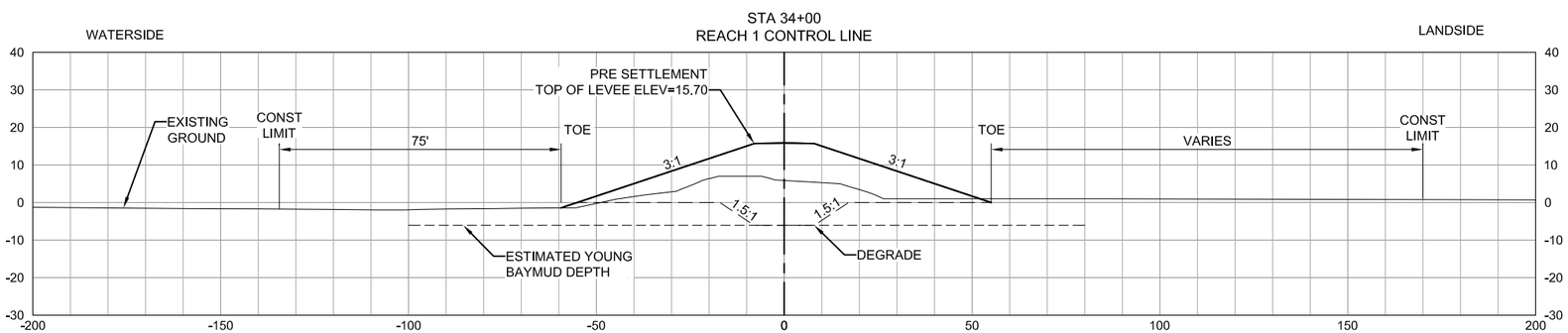

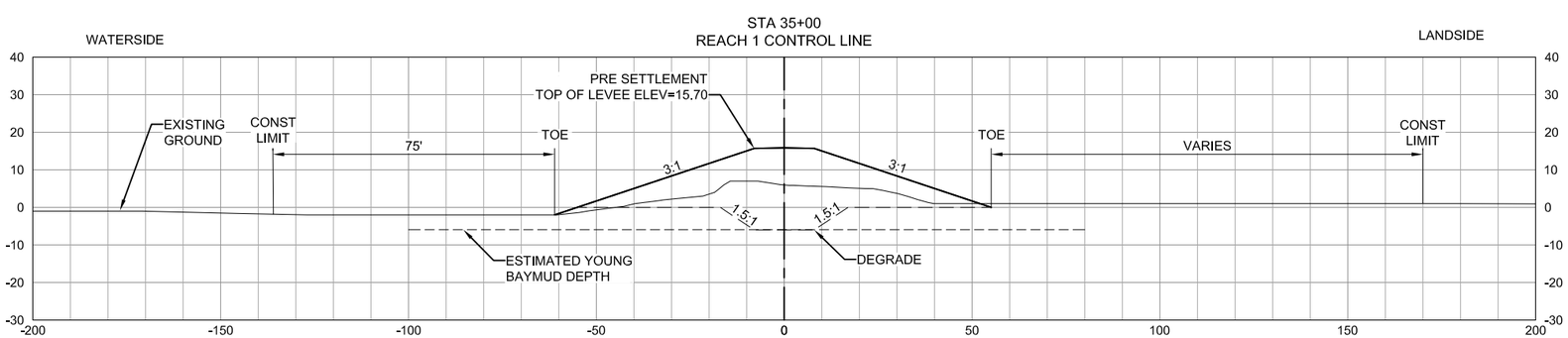

20' 10' 0 20'

SCALE = 1"=20'

NOTE:

1. OFFSET AND ELEVATIONS TO BE ADDED AT 90%.

60% DESIGN
NOT FOR CONSTRUCTION

US Army Corps of Engineers
San Francisco District
1455 Market Street
San Francisco, CA 94103

HDR Engineering, Inc.

Mark	Description	Date	Appr.

DESIGNED BY: DT
CHECKED BY: DJ
DRAWN BY: AA
DATE: 05/JUL/2017
SHEET NO. 25 of 32
DRAWING NO. 1004 71 46

SUBMITTED BY:
Chief, Civil Design Section
APPROVAL RECOMMENDED BY:
Chief, Engineering Branch
APPROVED BY:
Chief, Engineering & Technical Services Division

PREPARED UNDER THE DIRECTION OF
John C. Morrow
Lt Colonel, DISTRICT COMMANDER

CALIFORNIA
SANTA CLARA COUNTY
SOUTH SAN FRANCISCO BAY SHORELINE
REACH 1

CROSS SECTIONS
STA 32+00 TO STA 35+00

Sheet reference number
C-308
25 OF 32

C:\pwworking\west01\d0156187\ 10047146C-308.dwg 30 Jun 2017 - 1:22pm

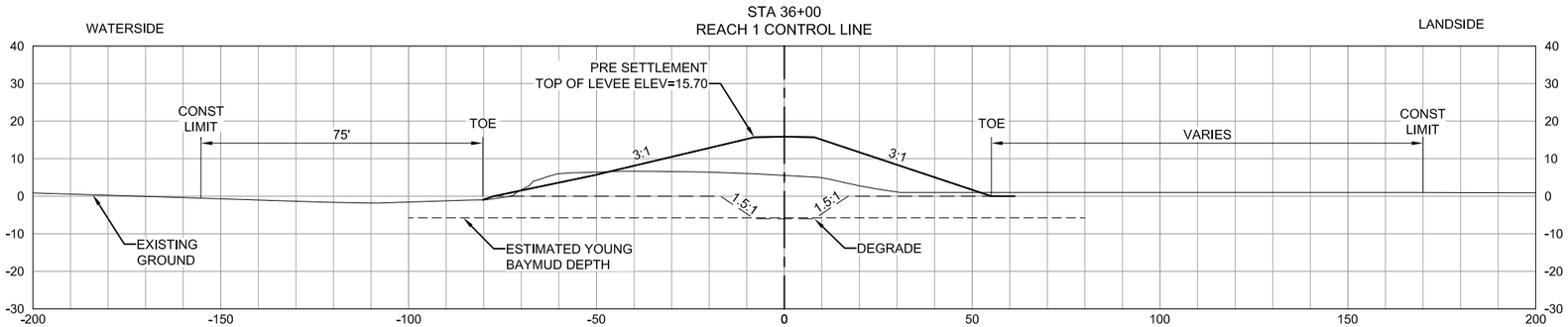

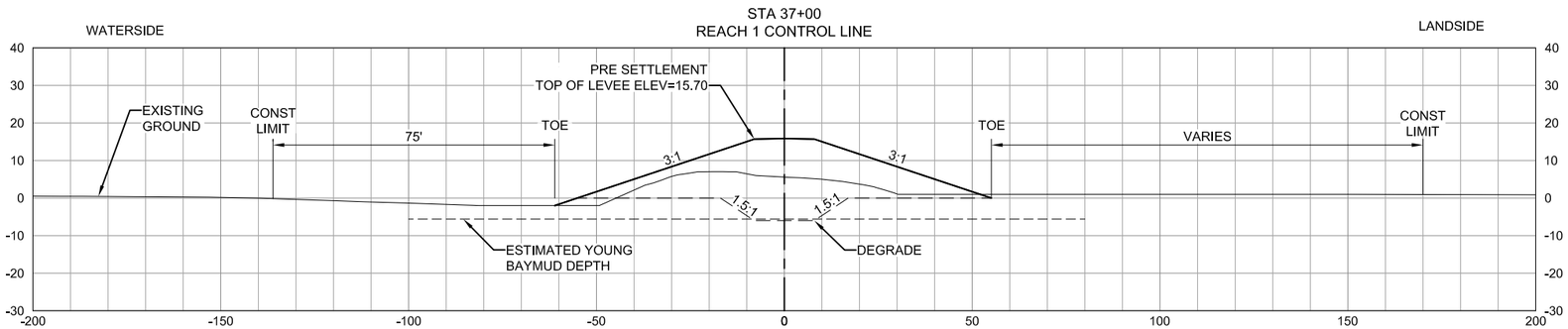

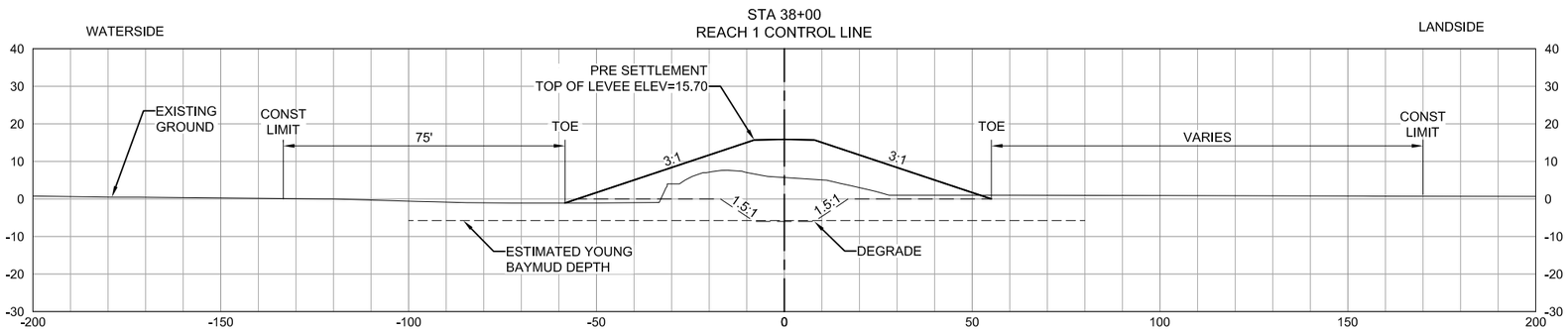

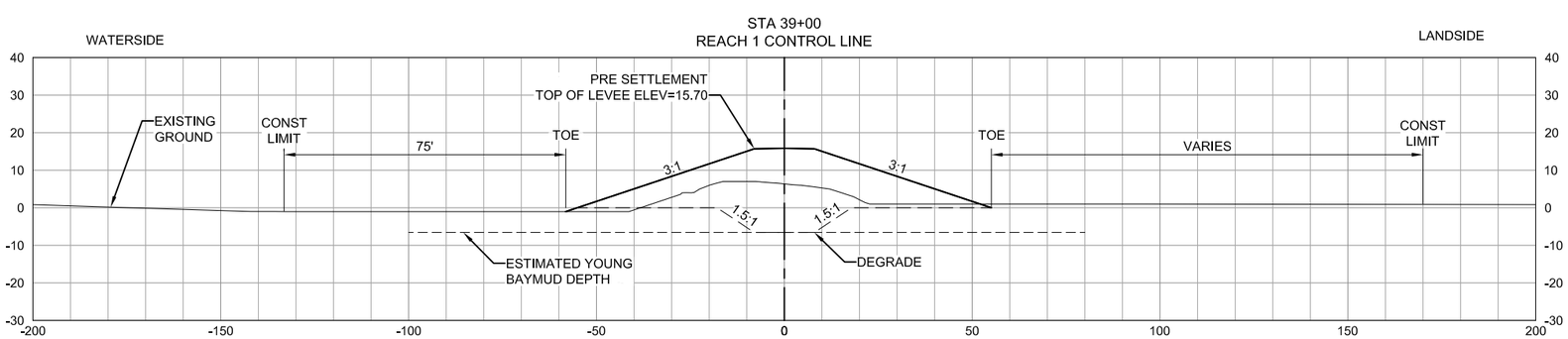

20' 10' 0 20'

SCALE = 1"=20'

NOTE:

1. OFFSET AND ELEVATIONS TO BE ADDED AT 90%.

60% DESIGN
NOT FOR CONSTRUCTION

US Army Corps of Engineers
San Francisco District
1455 Market Street
San Francisco, CA 94103

HDR Engineering, Inc.

Mark	Description	Date	Appr.

DESIGNED BY: DT
CHECKED BY: DJ
DRAWN BY: AA
DATE: 05/JUL/2017
SHEET NO. 26 of 32
DRAWING NO. 1004 71 46

SUBMITTED BY: Chief, Civil Design Section
APPROVAL RECOMMENDED BY: Chief, Engineering Branch
APPROVED BY: Chief, Engineering & Technical Services Division

PREPARED UNDER THE DIRECTION OF
John C. Morrow
Lt Colonel, DISTRICT COMMANDER

CALIFORNIA
SANTA CLARA COUNTY
SOUTH SAN FRANCISCO BAY SHORELINE
REACH 1

CROSS SECTIONS
STA 36+00 TO STA 39+00

Sheet reference number
C-309
26 OF 32

C:\pwworking\west01\d0156187\ 10047146C-309.dwg 30 Jun 2017 - 1:25pm

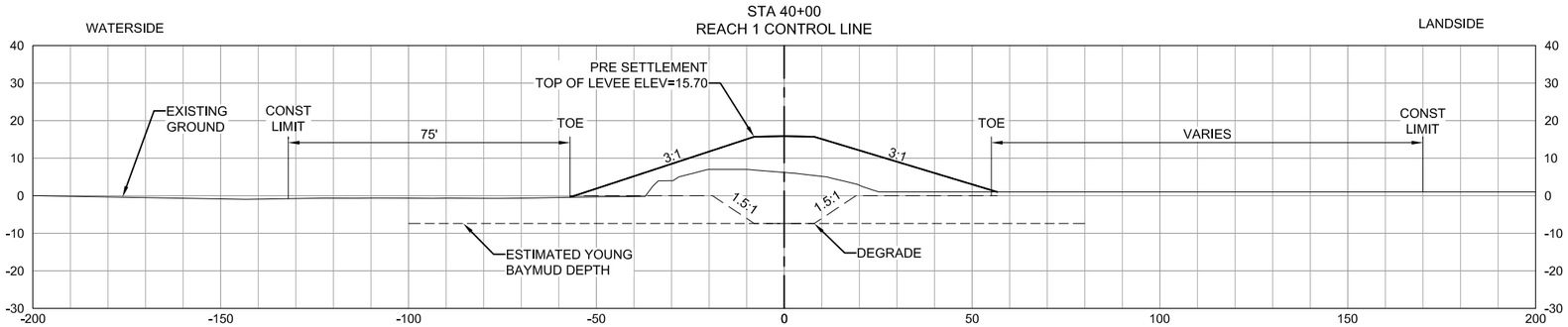

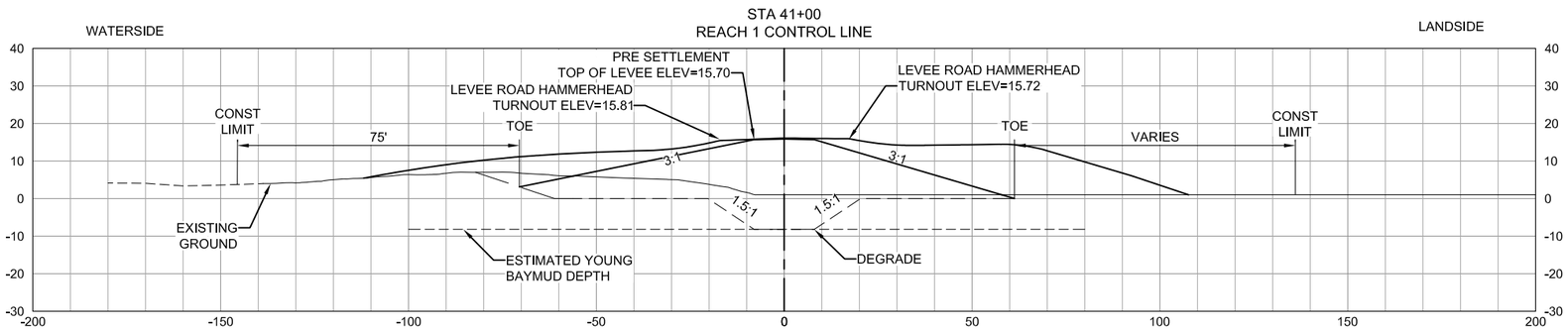

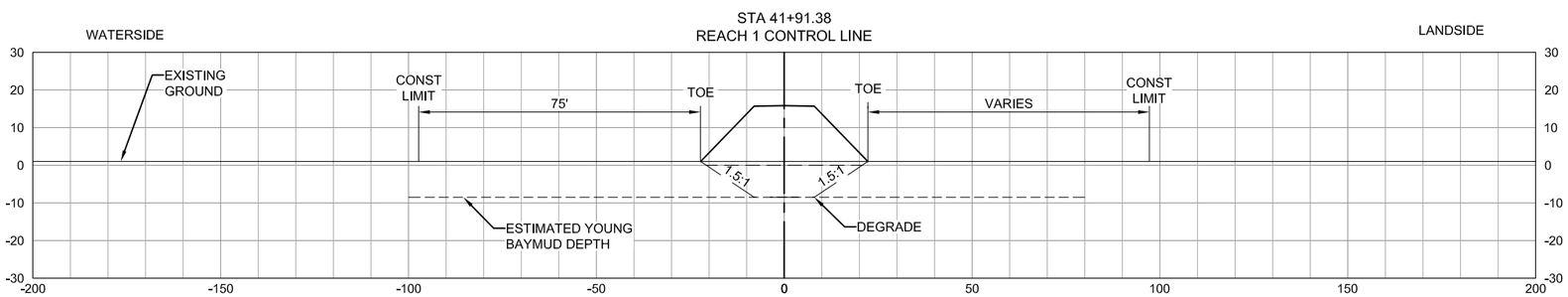

20' 10' 0 20'

SCALE = 1"=20'

NOTE:

1. OFFSET AND ELEVATIONS TO BE ADDED AT 90%.

60% DESIGN
NOT FOR CONSTRUCTION

US Army Corps of Engineers
San Francisco District
1455 Market Street
San Francisco, CA 94103

HDR Engineering, Inc.

Mark	Description	Date	Appr.

DESIGNED BY: DT
CHECKED BY: DJ
DRAWN BY: AA
DATE: 05/JUL/2017
SHEET NO. 27 of 32
DRAWING NO. 1004 71 46

SUBMITTED BY:
Chief, Civil Design Section
APPROVAL RECOMMENDED BY:
Chief, Engineering Branch
APPROVED BY:
Chief, Engineering & Technical Services Division

PREPARED UNDER THE DIRECTION OF
John C. Morrow
Lt Colonel, DISTRICT COMMANDER

SANTA CLARA COUNTY CALIFORNIA
SOUTH SAN FRANCISCO BAY SHORELINE
REACH 1

CROSS SECTIONS
STA 40+00 TO STA 41+91.38

Sheet reference number
C-310
27 OF 32

C:\pwworking\west01\d0156187\ 10047146C-310.dwg 30 Jun 2017 - 1:29pm

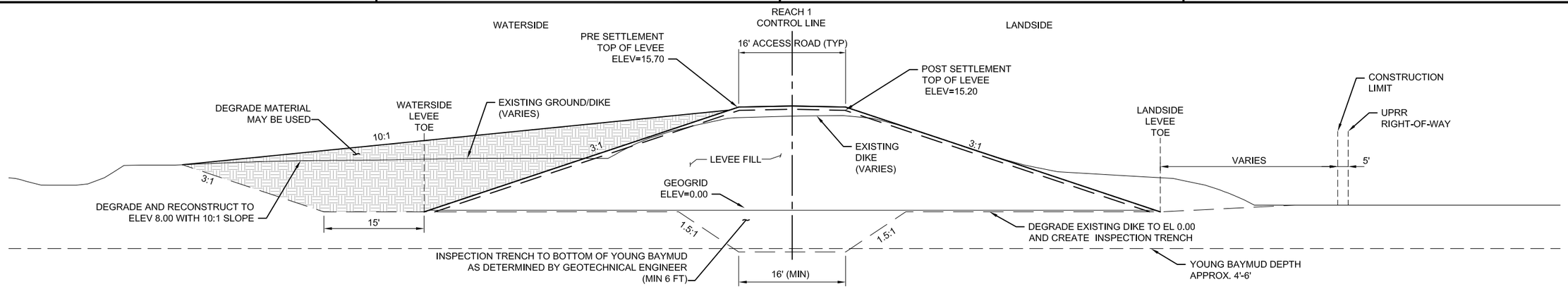

A TYPICAL LEVEE SECTION

SCALE: NTS - (REACH 1 CONTROL: STA 0+00 TO STA 3+00)

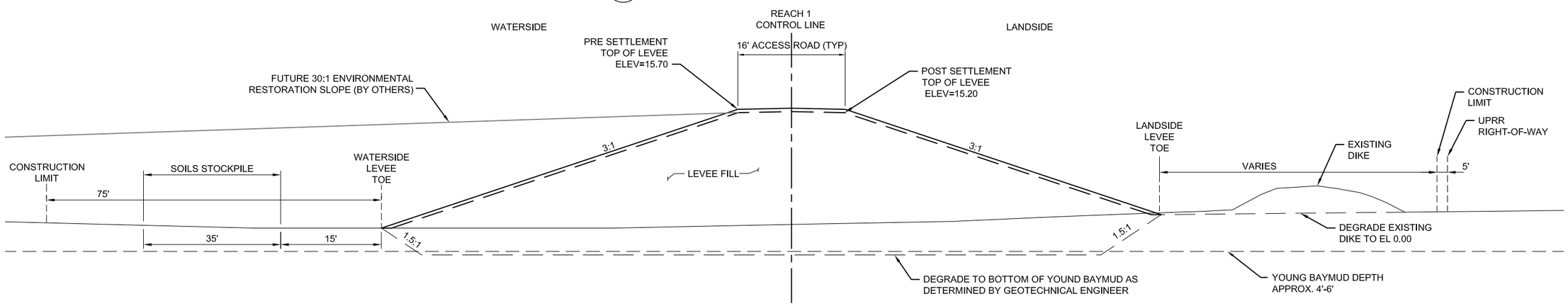

B TYPICAL LEVEE SECTION

SCALE: NTS - (REACH 1 CONTROL: STA 3+00 TO STA 9+00)

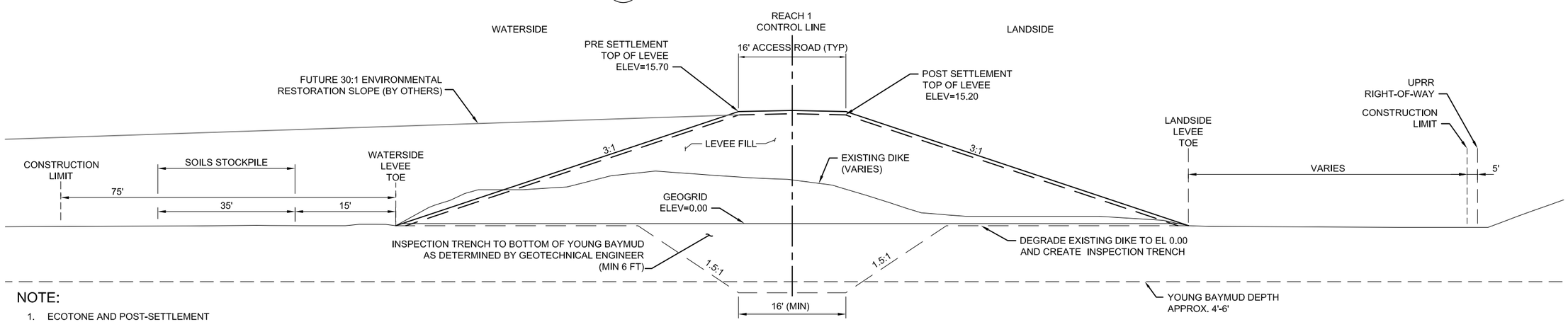

C TYPICAL LEVEE SECTION

SCALE: NTS - (REACH 1 CONTROL: STA 9+00 TO STA 37+75)

NOTE:

1. ECOTONE AND POST-SETTLEMENT INFORMATION IS SHOWN FOR 60% INFORMATION ONLY. THESE WILL BE REMOVED AT 90%

60% DESIGN
NOT FOR CONSTRUCTION

US Army Corps of Engineers
San Francisco District
1455 Market Street
San Francisco, CA 94103

HDR Engineering, Inc.

Mark	Description	Date	Appr.

DESIGNED BY: DT
DATE: 05/JUL/2017
SHEET NO. 28 of 32
CHECKED BY: DJ
DRAWING NO. 1004 71 46
DRAWN BY: AA

PREPARED UNDER THE DIRECTION OF
John C. Morrow
Lt Colonel, DISTRICT COMMANDER

SUBMITTED BY: Chief, Civil Design Section
APPROVAL RECOMMENDED BY: Chief, Engineering Branch
APPROVED BY: Chief, Engineering & Technical Services Division

CALIFORNIA
SANTA CLARA COUNTY
SOUTH SAN FRANCISCO BAY SHORELINE
REACH 1
TYPICAL LEVEE SECTIONS

Sheet reference number
C-500
28 OF 32

C:\pwworking\west01\d0156187\ 10047146C-500.dwg 30 Jun 2017 - 1:37pm

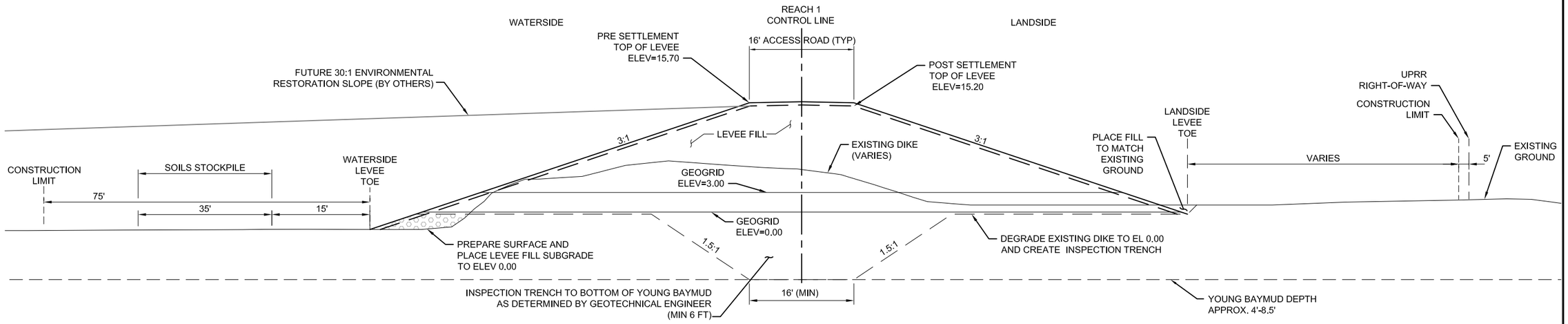

A TYPICAL LEVEE SECTION

SCALE: NTS - (REACH 1 CONTROL: STA 37+75 TO STA END)

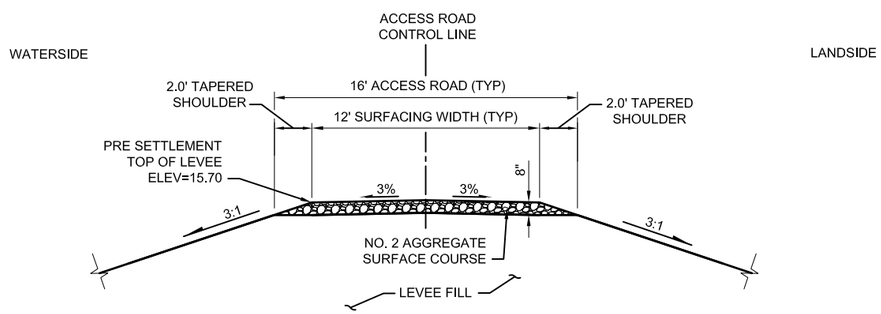

B TYPICAL LEVEE ROAD SECTION

SCALE: NTS - (REACH 1 CONTROL: STA 0+00 TO STA 41+30)

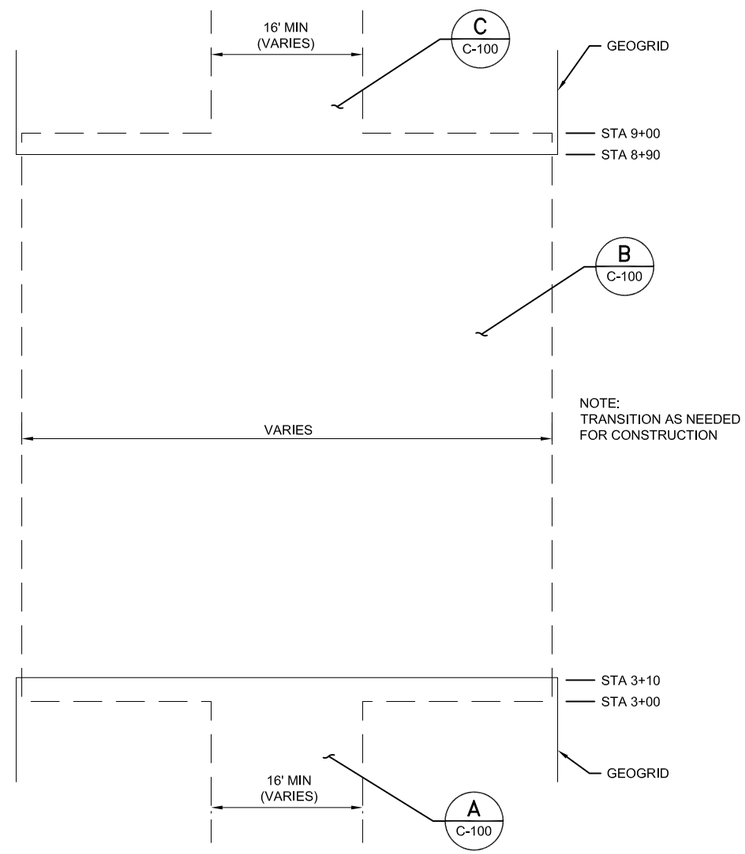

D INSPECTION TRENCH TRANSITION

SCALE: NTS - (REACH 1 CONTROL: STA 3+00 TO STA 9+00)

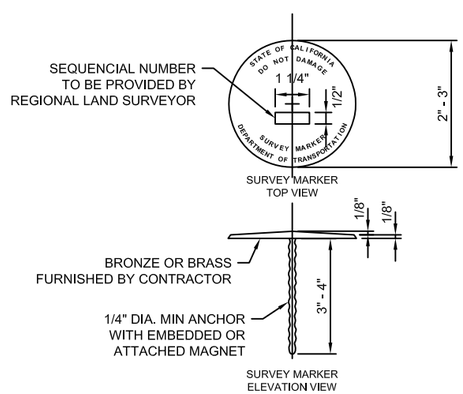

C SURVEY MARKER DETAIL

SCALE: NTS

60% DESIGN
NOT FOR CONSTRUCTION

US Army Corps of Engineers
San Francisco District
1455 Market Street
San Francisco, CA 94103

HDR Engineering, Inc.

Mark.	Description	Date	Appr.

DESIGNED BY: DT | CHECKED BY: DJ | DRAWN BY: AA
DATE: 05/JUL/2017 | SHEET NO. 29 of 32 | DRAWING NO. 1004 71 46

SUBMITTED BY: Chief, Civil Design Section
APPROVAL RECOMMENDED BY: Chief, Engineering Branch
APPROVED BY: Chief, Engineering & Technical Services Division

PREPARED UNDER THE DIRECTION OF
John C. Morrow
Lt Colonel, DISTRICT COMMANDER

SANTA CLARA COUNTY CALIFORNIA
SOUTH SAN FRANCISCO BAY SHORELINE
REACH 1
TYPICAL LEVEE SECTIONS AND DETAILS

Sheet reference number
C-501
29 OF 32

C:\pwworking\west01\d0156187\ 10047146C-501.dwg 30 Jun 2017 - 1:52pm

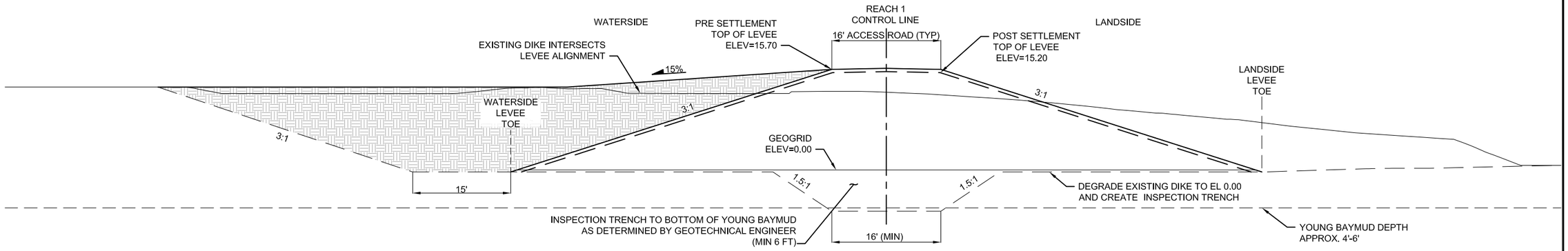

A LEVEE SECTION
SCALE: NTS - (REACH 1 CONTROL: STA 2+75)

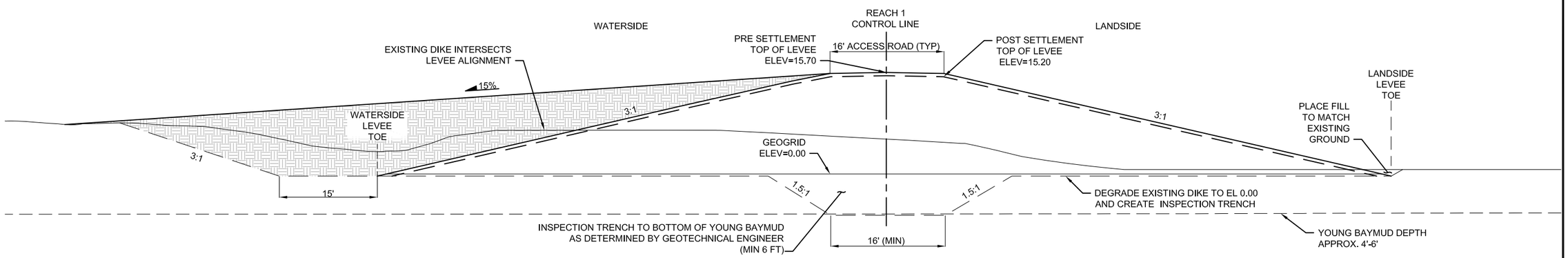

B LEVEE SECTION
SCALE: NTS - (REACH 1 CONTROL: STA 35+85)

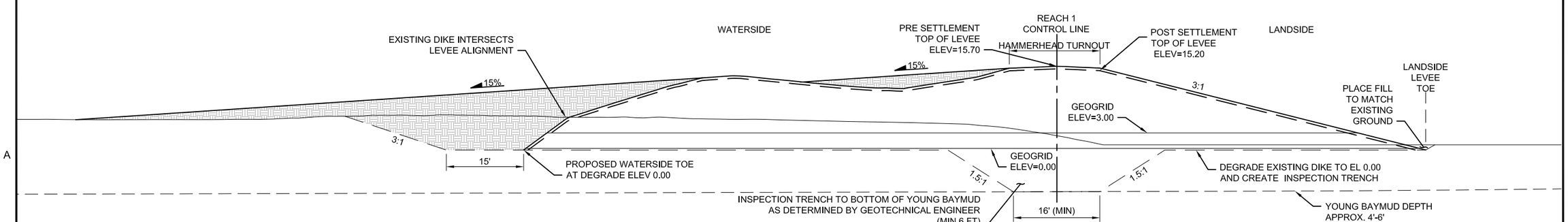

C LEVEE SECTION
SCALE: NTS - (REACH 1 CONTROL: STA 40+84)

NOTE:

1. THERE ARE THREE AREA OF THE LEVEE WHERE AN ADJACENT DIKE INTERSECTS THE THE ALIGNMENT. THESE ARE CONCEPTUAL DESIGNS ONLY. TO BE DEVELOPED AT 90% PENDING USACE DIRECTION.

60% DESIGN
NOT FOR CONSTRUCTION

US Army Corps of Engineers
San Francisco District
1455 Market Street
San Francisco, CA 94103

HDR Engineering, Inc.

Mark.	Description	Date	Appr.

DESIGNED BY: DT | DATE: 05/JUL/2017 | SHEET NO. 30 of 32 | CHECKED BY: DJ | DRAWING NO. 1004 | DRAWN BY: AA | 71 | 46

PREPARED UNDER THE DIRECTION OF
John C. Morrow
Lt Colonel, DISTRICT COMMANDER

SUBMITTED BY: Chief, Civil Design Section
APPROVAL RECOMMENDED BY: Chief, Engineering Branch
APPROVED BY: Chief, Engineering & Technical Services Division

CALIFORNIA
SANTA CLARA COUNTY
SOUTH SAN FRANCISCO BAY SHORELINE
REACH 1
TYPICAL LEVEE AND DIKE TIE-IN SECTIONS

Sheet reference number
C-502
30 OF 32

C:\pwworking\west01\d0156187\ 10047146C-502.dwg 30 Jun 2017 - 2:26pm

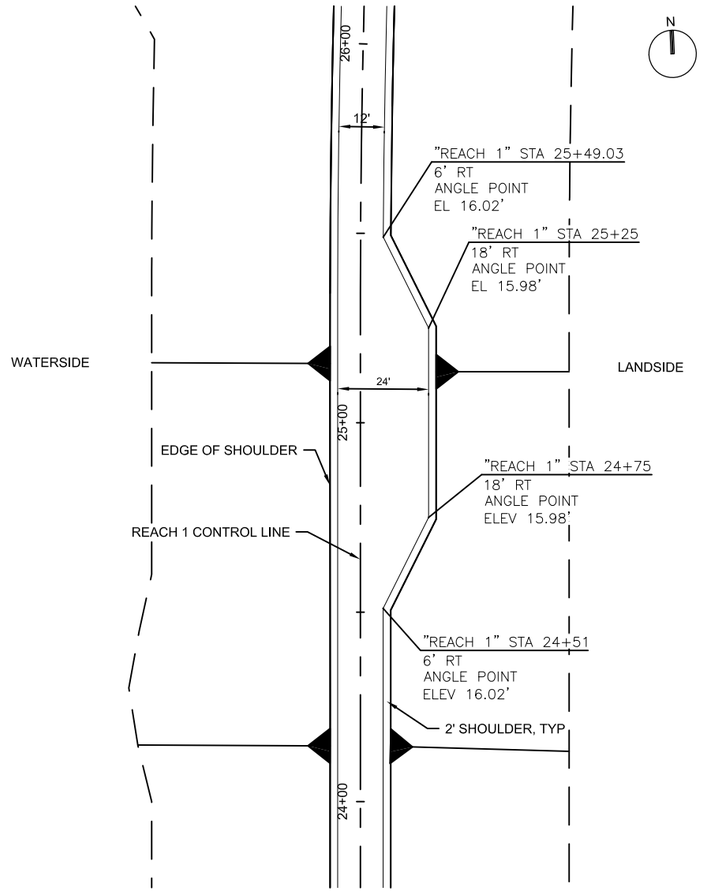

1 TURNOUT DETAIL
SCALE: 1"=20'

60% DESIGN
NOT FOR CONSTRUCTION

US Army Corps of Engineers
San Francisco District
1455 Market Street
San Francisco, CA 94103

HDR Engineering, Inc.

Mark	Description	Date	Appr.

DESIGNED BY: DT
CHECKED BY: DJ
DRAWN BY: AA
DATE: 05/JUL/2017
SHEET NO. 31 of 32
DRAWING NO. 1004 71 46

SUBMITTED BY:
Chief, Civil Design Section
APPROVAL RECOMMENDED BY:
Chief, Engineering Branch
APPROVED BY:
Chief, Engineering & Technical Services Division

PREPARED UNDER THE DIRECTION OF
John C. Morrow
Lt Colonel, DISTRICT COMMANDER

CALIFORNIA
SANTA CLARA COUNTY
SOUTH SAN FRANCISCO BAY SHORELINE
REACH 1
CONSTRUCTION DETAILS I

Sheet reference number
T-550
31 OF 32

C:\pwworking\west01\d0156187\ 10047146T-550.dwg 30 Jun 2017 - 2:41pm

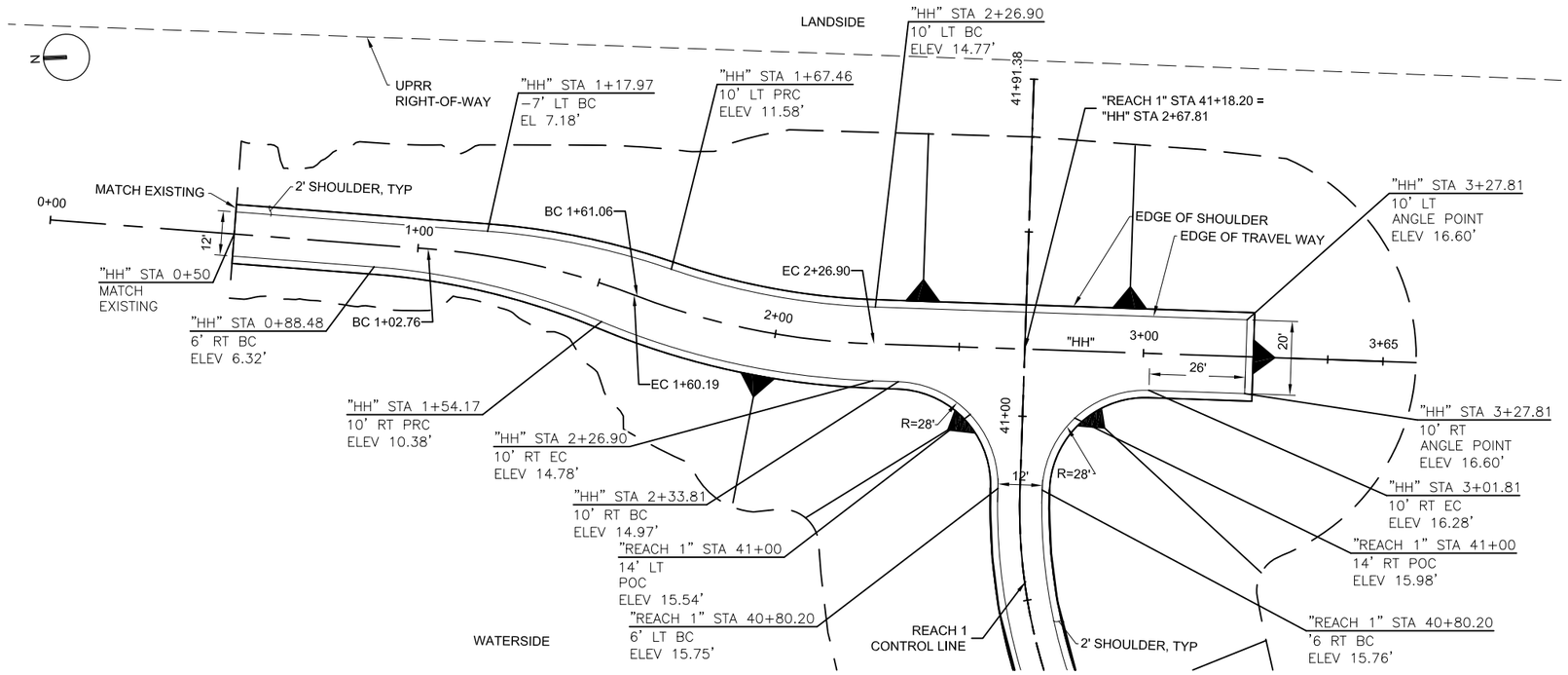

2 TURNAROUND PLAN

SCALE: 1"=20'

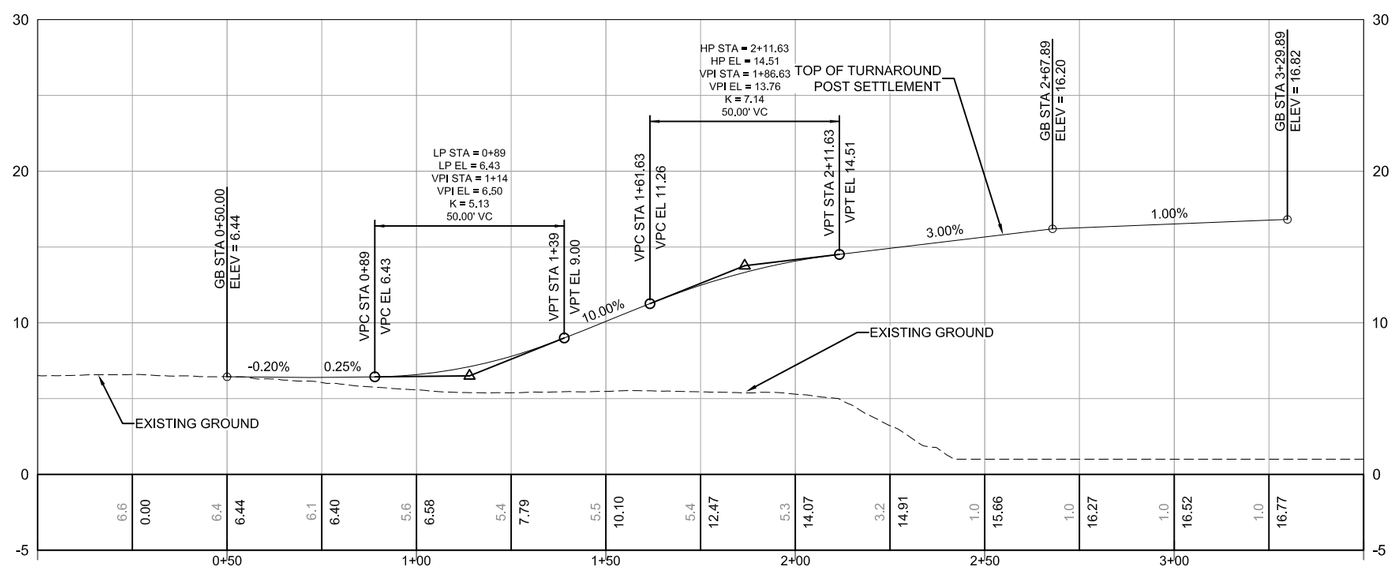

TURNAROUND PROFILE

SCALE: H 1"=20' V 1"=5'

60% DESIGN
NOT FOR CONSTRUCTION

US Army Corps of Engineers
San Francisco District
1455 Market Street
San Francisco, CA 94103

HDR Engineering, Inc.

Mark	Description	Date	Appr.

DESIGNED BY: DT
CHECKED BY: DJ
DRAWN BY: AA
DATE: 05/JUL/2017
SHEET NO. 32 of 32
DRAWING NO. 1004 71 46

SUBMITTED BY: Chief, Civil Design Section
APPROVAL RECOMMENDED BY: Chief, Engineering Branch
APPROVED BY: Chief, Engineering & Technical Services Division

PREPARED UNDER THE DIRECTION OF
John C. Morrow
Lt Colonel, DISTRICT COMMANDER

CALIFORNIA
SANTA CLARA COUNTY
SOUTH SAN FRANCISCO BAY SHORELINE
REACH 1
CONSTRUCTION DETAILS

Sheet reference number
T-551
32 OF 32

C:\pwworking\west01\d0156187\ 10047146T-551.dwg 30 Jun 2017 - 3:55pm