Technical Memorandum

To: Ms. Josie McKinley and Mr. Patrick Crain, Poseidon

From: George Hecker, Michael Rounds, Greg Allen and Elizabeth White

Date: July 31, 2018

Re: **Linear Diffuser Optimization and Design for Poseidon's Huntington Beach Desalination Plant**

Alden Research Laboratory, Inc. (Alden) has prepared a design of the brine discharge diffuser at Poseidon Water Surfside's (Poseidon) proposed Huntington Beach Desalination Plant (HBDP). The design was developed following procedures described in a paper by Philip Roberts titled *Brine Diffusers and Shear Mortality* (Roberts, 2018a) and *Brine Diffusers and Shear Mortality: Application to Huntington Beach* (Roberts, 2018b). The main goal of the analysis was to minimize the entrainment flow through the optimization of the diffuser while remaining within the Ocean Plan's brine mixing zone requirements. This Technical Memorandum (TM) provides information on the design assumptions, methods, and results for a linear diffuser with fourteen diffuser "duck-bill" check valves (ports). At the average design flow of 62.5 MGD, the check valves have an open area equivalent to a 1.28 ft round opening. During rare occurrences, such as during HBDP start up, the linear diffuser does have the capability to discharge up to 127 MGD. A drawing of the conceptual linear diffuser design is presented in Appendix A.

This TM is organized into two sections. The first section discusses the validation of the UM3 model using Roberts' input and output relative to his alternate designs discussed in *Brine Diffusers and Shear Mortality: Application to Huntington Beach* (Roberts, 2018b). The second section discusses the design and modeling process Alden used to develop the new fourteen port diffuser using Roberts' methodology.

1.0 UM3 Model Validation

Alden used the UM3 module within Plumes18b, developed by the U.S. Environmental Protection Agency (EPA) to verify the results determined by Roberts in *Brine Diffusers and Shear Mortality: Applications to Huntington Beach* (Roberts, 2018b). UM3 is a quasi-three dimensional model used for simulating single and multi-port submerged discharges. The model uses a Lagrangian function that determines the projected-area-entrainment (PAE) hypothesis to quantify forced entrainment. The model requires input of the diffuser geometry, flow, salinity, density, and temperature. In addition, ambient salinity, density, temperature, and current are required. UM3 uses this information to calculate a plume profile and the dilution of the plume through the water column.

Roberts conducted a review of the proposed diffuser design originally presented by Poseidon in Roberts 2018b. Roberts uses the procedures outlined in Roberts 2018a to present the three alternative configurations of the diffuser design in Roberts 2018b. These configurations include a single multiport "rosette" diffuser with three ports, a linear diffuser with six ports, and a linear diffuser with 10 ports. All three of the alternate configurations were analyzed by Roberts using a port depth of 27 feet. Roberts used 90% of the port depth for submergence in the UM3 model runs which equals 24 feet. Roberts used UM3 to determine the entrained flow up to the jet's maximum (terminal) rise height for each of these alternative designs. The UM3 model input values are provided in Table 1. It should be noted that the existing water depth is 24.2 feet below Mean Lower Low Water (MLLW) and Poseidon's proposed design has a port depth of 17.8 feet. Consistent with Roberts 2018b, Poseidon used 90% of the port depth for submergence in the analysis, which equals 16.0 feet.

Table 1 Roberts 2018b - UM3 validation input data

Scenario	No. of ports	Diameter (in)	Brine Flow (mgd)	Submergence of Jet Flow (ft)	Angle (deg)	Ambient Salinity (ppt)	Brine Salinity (ppt)	Ambient Temp. (°C)	Brine Temp (°C)
Single riser, alternative design	3	26.9	62.5	24	42	33.5	62.4	20	22
Alternative linear diffuser	10	14.5	62.5	24	60	33.5	62.4	20	22
Alternative linear diffuser	6	21.6	62.5	24	60	33.5	62.4	20	22

Alden developed a UM3 model to evaluate each of the three designs presented in Roberts 2018b to validate use of the model and verify that the results were the same as the dilution values presented by Roberts. Table 2 compares the dilution values determined by Roberts to those determined by Alden.

Table 2 shows that the dilution values for the single riser alternative match those presented by Roberts and the linear diffuser dilution values are within a tenth of Roberts 2018b's dilution values. Alden did not have UM3 printouts for the linear diffuser scenarios and therefore was not able to verify the exact input and output values for these runs. However, based on this comparison, Alden determined that the model was running as expected.

Table 2 Comparison of Roberts 2018b alternative design dilution with Alden results

Scenario	No. of ports	Diameter (in)	Angle (deg)	UM3 Average Dilution S_{ta} (per Roberts Report 2018b Tables 3 and 4)*	Alden UM3 (Dilution at Terminal Rise)
Single riser, alternative design	3	26.9	42	4.3	4.3
Alternative linear diffuser	10	14.5	60	5.8	5.7
Alternative linear diffuser	6	21.6	60	3.7	3.6

*Value is for terminal rise position of jet trajectory

2.0 Diffuser Design

2.1 Diffuser Design per Roberts 2018a Empirical Method for 60 degrees

Prior to using the program UM3 to help design a linear diffuser for the HBDP brine discharge, a check on using UM3 was made (see Tables 1 and 2) to insure the same output was obtained by Alden for the same input used by Roberts (Roberts, 2018b). However, this check on using UM3 was delayed because some of the input data on ambient ocean water and brine density and salinity were not available. To proceed with a diffuser design without waiting for the reproduction of UM3 results, a method of using the governing equations for brine jet characteristics presented by Roberts (Roberts, 2018a) to determine key parameters was developed.

This section presents the technical approach for optimizing the diffuser using equations based on empirical evidence as discussed by Roberts in Roberts 2018a. The equations are discussed below in logical but not necessarily sequential order. The required inputs and their values used in the calculations are:

- Brine flow (62.5 MGD)
- Submergence of jet origin at MLLW (17.8 ft)
- Vertical jet angle (60 deg)
- Density of ambient ocean water (1023.6 kg/m^3)
- Density of brine (1045.4 kg/m^3)
- Ambient ocean salinity (33.5 ppt)
- Brine salinity (62.4 ppt)

- Allowed salinity increase at edge of BMZ (2 ppt)
- Required bulk dilution to reach 2 ppt (62.4-33.5)/2 = 14.45

Due to the predominant influence of the relatively shallow submergence on the limiting (densimetric) Froude number (i.e., on the maximum permissible discharge velocity for a given diameter) so the jets do not reach the surface, that issue is addressed first.

a) Submergence influence on jet velocity, diameter and number:

The maximum allowed height of rise of the upper jet boundary, the initial jet diameter and the initial discharge velocity is related by

$$y_t = 2.2\ F\ D \qquad (1)$$

where: $y_t = 0.9\ (17.8)$

$F = V / (\sqrt{Dg\Delta\rho/\rho})$; densimetric Froude number

V = initial jet velocity

D = initial (equivalent) jet diameter

g = acceleration of gravity constant

$\Delta\rho/\rho$ = relative change in water density

Although y_t is thus known, the initial jet velocity and diameter need to be determined. This involves a trial and error process. By selecting a jet diameter D, the jet velocity V is calculated from equation 1. The jet area (for the selected D) times the velocity is the flow per jet. This is divided into the total flow to determine the number of jets required. Since the number of jets must be an integer (no fractions), this process is repeated by varying D around the initial value until an integer number of jets results. The trial and error process may be repeated for other selected diameters to result in a range of practical number of integer jets (e.g., from about 5 to 20), each integer number of jets corresponding to a different initial jet diameter and velocity. Any combination of such jet diameter and velocity so determined satisfies equation 1 and yields a maximum height of jet boundary rise of 90% of the available submergence. This means there is no interaction of the jets with the surface for any option selected.

b) Spacing of jets and header pipe length

The above characteristics (and those discussed below) are valid for single jets. Although correction factors to account for the reduction in dilution for co-mingling of diffuser jets are provided based on test data by Roberts (Roberts, 2018a), it is preferable to space the jets in a linear diffuser so they do not mingle. Jets will not interfere with each other if their spacing s_p along a linear diffuser is

$$s_p > 2\ F\ D \qquad (2)$$

This spacing is perpendicular to the jet direction, so if the jets are oriented to have a discharge component in the direction of the header pipe, the jet spacing along the header pipe will be larger. This arrangement of jets may be needed to create an off-shore component of momentum so that the brine plume does not come back over the diffuser to be re-entrained during a tidal flow reversal. An initial off-shore momentum also helps provide an unobstructed path for ambient ocean water to be entrained into the jets.

The header length L depends on the jet spacing, their number and any extra length needed for construction or to avoid interference with other structures. Using N as the number of jets along the header side having the most (or equal) jets (for a two sided discharge) or for jets only on one side of the header pipe,

$$L = (N - 1)\ s_p + \text{extra} \qquad (3)$$

where: extra = length needed for construction, to avoid interference or if a jet extends beyond the header

c) Entrained flow

Dilution occurs as ambient water is pulled into the jets. This entrained flow mixes with the brine and reduces the salt concentration. Flow shear (change in velocity per distance) due to small (e.g., 1 mm) eddies can impact organisms entrained into the jets. The only region of the jets where this is of concern is the region up to the jet's maximum (terminal) height of rise. The falling portion of the jets is not momentum driven and is not of concern. Therefore, the entrained flow to the terminal rise is to be quantified and minimized without excessive enlargement of the Brine Mixing Zone (BMZ).

The centerline dilution to the terminal rise point may be calculated using the following equation:

$$S_t = 0.6\ F \qquad (4)$$

where S_t = centerline dilution at terminal rise

To obtain the bulk (average) dilution in the entire jet at the terminal rise, the centerline dilution is multiplied by 1.4, so the total jet dilution at the terminal rise point is

$$S_a = 1.4\ (0.6)\ F \qquad (5)$$

where S_a = average or bulk dilution = Q_{total}/Q_o

Since S_a is defined as Q_{total}/Q_o, the total flow in the jet may be calculated and the initial flow is subtracted to obtain the entrained flow. That is

$$Q_e = S_a\ Q_o - Q_o = Q_o\ (S_a - 1) \qquad (6)$$

where Q_e = entrained flow

This process is repeated for other locations using the appropriate equations for dilution in place of equation (4) and the distances to the impact point and to the end of the "near field" (limit of turbulence) is determined (see below). The dilutions at and distances to these downstream points are used to interpolate the dilution versus distance to obtain the boundaries of the BMZ where the salinity increase over ambient is no more than 2 ppt. As indicated by the inputs, this boundary occurs at a dilution of 14.45. Since no points may be above 2 ppt, only the centerline (maximum) values are considered.

Centerline dilution at and the distance to the impact point are given by:

$$S_i = 1.6\ F \qquad (7)$$

and

$$X_i = 2.4\ FD \qquad (8)$$

Centerline dilution at and distance to the end of the near field are given by:

$$S_n = 2.6\ F \qquad (9)$$

and

$$X_n = 9.0\ FD \qquad (10)$$

Unless the required dilution of 14.45 or more is obtained at the impact point, the distance to the boundary of the BMZ (i.e. where the dilution is 14.45) is determined by linear interpolation of the dilution between the calculated distances to the impact point and the end of the near field. The coefficients used in the above equations only apply to 60 degree nozzles and were developed by Roberts based on experimental observations. Other angles would have different coefficients.

d) Area of Brine Mixing Zone (BMZ)

The above calculated distances to the required dilution of 14.45 correspond to a salinity of 2 ppt over ambient along the path of the jets. The resulting shape of the BMZ, in accordance with Roberts 2018a, is shown in Figure 1, where X_2 equals the distance to a dilution of 14.45 from the nozzles.

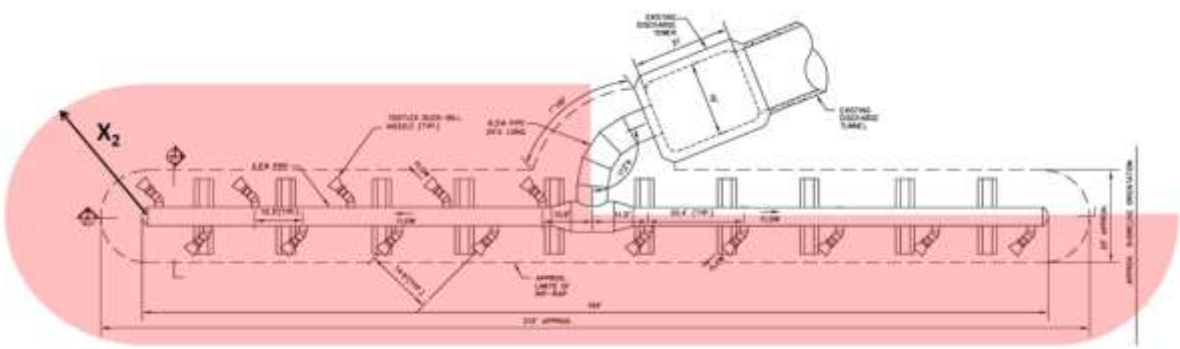

Figure 1 Outline of the BMZ Area

For the portion of pipe with jets on both sides of the header pipe, the BMZ area is the same as a rectangle with a width equal to twice X_2 times the length of that portion of the header pipe (with any extensions as per equation (3) above), plus a semicircle with a radius equal to X_2. For the portion of the proposed diffuser with jets on only one side of the header pipe, the resulting (additional) shape of the BMZ is a rectangle with a width of X_2 and length equal to that portion of the header pipe, plus a quarter circle with a radius of X_2. So the conservative BMZ area is given by

$$A = X_2 L_s + 2 X_2 L_a + \tfrac{3}{4} \pi X_2^2 \qquad (11)$$

where X_2 = distance to 2 ppt limit

L_s = length of pipe with all jets on same side of header

L_a = length of pipe with jets on alternating sides of header

2.2 Proposed Design

Alden developed the diffuser design for Poseidon's proposed HBDP facility. The design was developed following procedures described in Roberts 2018a along with the assumptions presented above. The design of the linear diffuser is shown in Appendix A.

The design utilizes the existing 14 foot diameter HBGS discharge tunnel extending approximately 1,500 feet offshore that terminates in a vertical riser that is 14.2 feet below

MLLW. The proposed diffuser design connects to the tower via a 6.5 foot diameter pipe that connects to a 4 foot diameter header pipe at a tee junction. The header pipe is oriented perpendicular to the shoreline to minimize wave forces acting on the header. The proposed rip-rap area around the diffuser has a total footprint of approximately 4,433 square feet.

The header pipe has fourteen ports capped with tide check (duck bill) valves at angles that are oriented 60 degrees upward in profile view and 45 degrees to the pipe in plan view to provide net off-shore momentum. The port depth is 17.8 feet below MLLW. This submergence is significantly less than the submergence used by Roberts in Roberts 2018b. Roberts used a port depth of 27 feet. This resulted in a greater port depth allowing Roberts to use fewer ports with a higher outflow velocity given the greater height to the jet top.

The duck bills are oriented relative to each other to provide adequate flow separation for entrainment of ambient ocean water into each discharge jet with spacing of 20.4 feet along the header pipe. The jet velocity from each of the fourteen ports is 5.3 ft/sec at a discharge flow rate of 62.5 MGD. During the design phase, the duck-bill check valve vendor will need to optimize a design that provides the desired discharge area (velocity) at the design flow.

2.3 UM3 Model Entrained Flow Calculation for Proposed Design

The UM3 model for the Huntington Beach diffuser design was developed using the same input values as those for the equations based on empirical evidence. UM3 determines the average dilution (S_{ta}) and centerline dilution at points along the plume. The average dilution is used to determine the entrained flow at the "local maximum rise" location. This is the highest point to which the plume rises before the brine plume starts to sink due to its greater density. UM3 was run for the proposed design following the suggested procedure in Roberts 2018a, pp.26-30. The entrained flow is given by

$$Q_e = n\, Q_j\, (S_{ta} - 1) \qquad (12)$$

where n = number of ports

S_{ta} = average dilution computed by UM3 at the terminal rise height

Q_j = flow per jet

Appendix B includes a UM3 output of the proposed diffuser design.

2.4 Summary

A summary of the diffuser details, calculation results using empirical equations, and UM3 results for the proposed design of the linear diffuser that minimizes entrainment flow is shown in Table 3.

Table 3 Summary of diffuser details and BMZ results for 62.5 MGD brine discharge

Diffuser Details					BMZ Results			
No. of ports	Equiv Dia. (in)	Angle Θ (deg)	Jet Velocity u (ft/s)	Froude number F	Benthic Impact of salinity of 2 ppt above ambient (Acres)	BMZ Radius* (ft)	UM3 Dilution (S_{ta})	UM3 Entrained Flow (mgd)
14	15.4	60	5.32	5.66	0.64	63 .2	2.77	168

*BMZ radius is the distance from the nozzle along the jet to where salinity is 2 ppt above ambient.

2.5 Head Loss Analysis for the Proposed Design

Alden previously estimated head loss of Poseidon's proposed HBDP discharge system which was summarized in TMs dated March 22, 2017 (Alden, 2017a) and April 26, 2017 (Alden, 2017b). The TMs described the head loss calculation methodology and provided head loss estimates for both onshore and offshore components of the discharge system at a discharge flow rate of 127 MGD. These head loss calculations have been updated to reflect the proposed fourteen port linear diffuser design (see Appendix A), replacing the previously proposed multiport rosette design. Only the offshore portions of the design have been changed, therefore the previous onshore estimates of head loss are still valid and do not require updating.

Head loss calculation assumptions:

- Total discharge flow of 127 MGD
- 14 port linear diffuser design as shown in Appendix A
- Equal flow discharged from each nozzle
- Equivalent nozzle diameter of 1.28 ft
- Friction coefficient depicting rough surfaces for existing conduits and smooth surfaces for new linear diffuser piping.

The head loss estimates for the linear diffuser design are shown in Table 4. The total offshore head loss is estimated at 3.51 ft which includes losses through the 14 ft diameter 2,130 ft long discharge pipe, discharge riser, linear diffuser piping and tide valve nozzles for a discharge flow of 127 MGD. This head loss is less than the previous multiport rosette design of 3.76 ft for the 127 MGD discharge flow condition.

Table 4 HBDP offshore discharge system calculated head losses for a discharge of 127 MGD

Description	Head loss (ft)	Notes
Existing 14 ft dia. discharge pipe	0.18	friction losses along 2,130 ft long existing pipe
Linear diffuser piping	1.49	friction and transition losses through riser and diffuser conduits
Tide valve nozzle	1.85	losses through discharge ports
Total	**3.51**	

References

Alden, 2017a. *Technical Memorandum, Summary of Head Loss Calculations for the Poseidon Huntington Beach Desalination Plant Discharge System, March 22, 2017,* Holden, MA: Alden Research Laboratory, Inc..

Alden, 2017b. *Technical Memorandum, Addendum to Supplement March 22, 2017 Technical Memo "Summary of Head Loss Calculations for the Poseidon HBDP Discharge System" and March 31, 2017 Technical Memo "Diffuser Head for Co-located and Stand-alone Operation of HBDP", April 26, 2017,* Holden, MA: Alden Research Laboratory, Inc..

Palomar, P., Lara, J. & Losada, I., 2012. Near field brine modeling part 2: Validation of commercial tools. *Desalination,* Volume 290, pp. 28-42.

Roberts, P., 2018a. *Brine Diffusers and Shear Mortality,* Atlanta, GA: prepared for Eastern Research Group.

Roberts, P., 2018b. *Brine Diffusers and Shear Mortality: Application to Huntington Beach, Final Report,* Atlanta, GA: prepared for Eastern Research Group.

Appendix A

Proposed Linear Diffuser Design

ALL ELEVATIONS REPRESENTED ON THIS DRAWING REFER TO THE MEAN LOWER LOW WATER (MLLW) TIDAL DATUM. BASED ON A SURVEYOR'S LETTER FROM JOHNSON – FRANK & ASSOCIATES, INC. DATED JULY 13, 2016 THE HUNTINGTON BEACH GENERATING STATION DRAWING ELEVATION DATUM IS IN NAVD88 AND TO CONVERT TO MLLW SIMPLY ADD 0.18 FT TO NAVD88.
HUNTINGTON BEACH GENERATING STATION DRAWING 546937 IS THE BASIS FOR THE EXISTING FEATURES REPRESENTED ON THIS DRAWING.

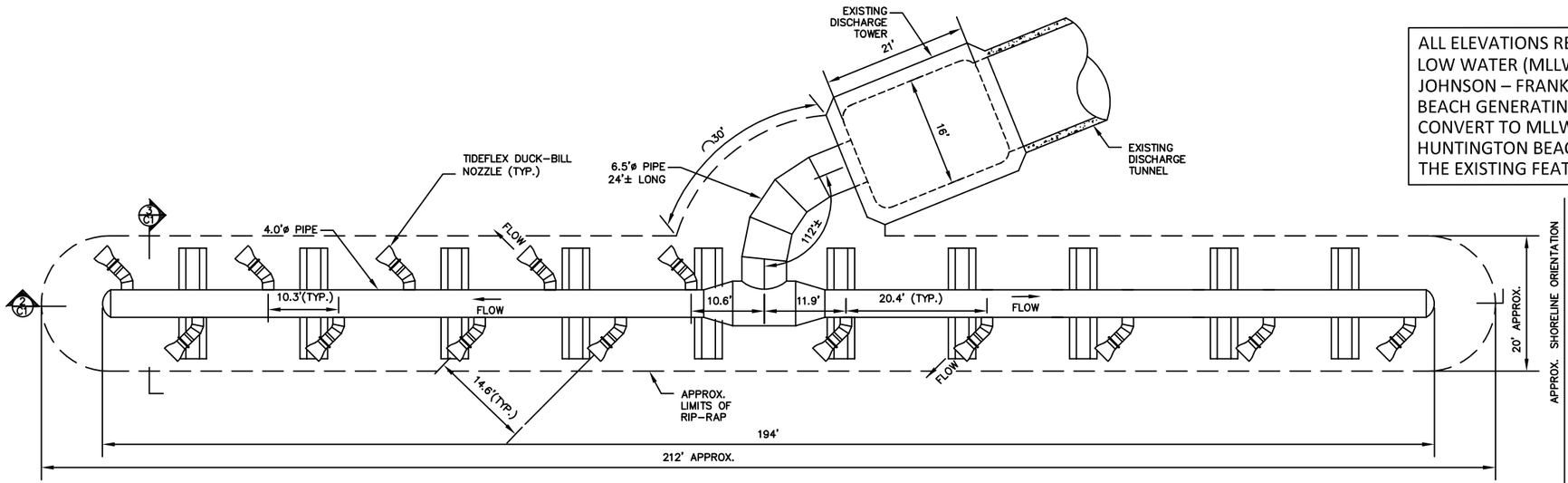

1 C1 **PLAN**

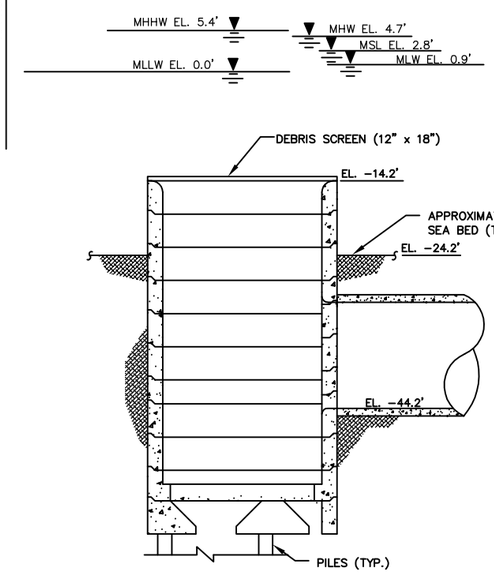

4 C1 **EXISTING DISCHARGE TOWER - ELEVATION**

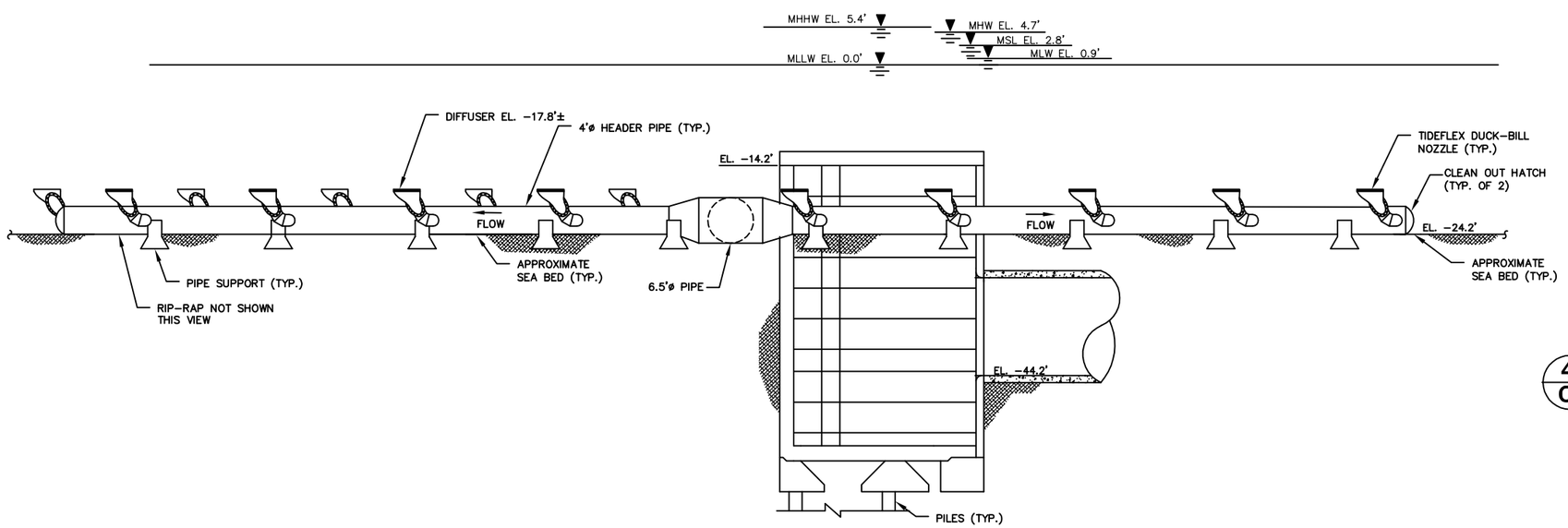

2 C1 **SECTION**

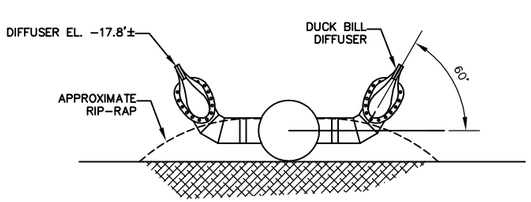

3 C1 **SECTION- DUCK BILL NOZZLE**

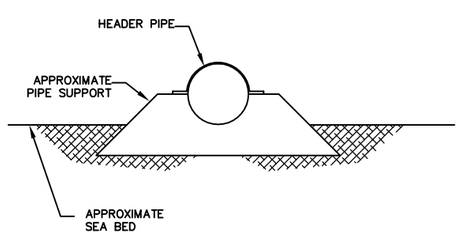

3 C1 **SECTION- PIPE SUPPORT**

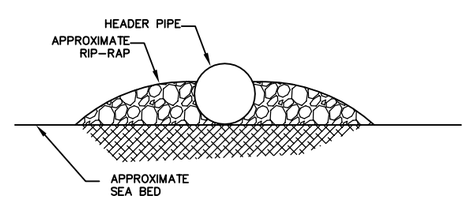

3 C1 **SECTION- RIP-RAP**

DIFFUSER DESIGN ASSUMPTIONS

1	DESIGN FLOW CONDITIONS	FLOW (MGD)	SALINITY (PPT)
	AVERAGE ANNUAL	56.7	63.1
	PEAK DAILY	62.5	62.4
	START UP & MAINTENANCE	127	33.5

2 14 DISCHARGE PORTS
3 NOZZLE.: TIDEFLEX TBD, EQUIVALENT DIA.: 1.28'
4 ANGLE FROM HORIZONTAL: 60 DEG.
5 PORT DISCHARGE ELEVATION: -17.8' (MLLW)
6 APPROXIMATE RIP-RAP AREA: 4433 SQUARE FEET

No.	REVIEW	BJM	7/19/2018
0	Revision Description	Drwn	Chkd	Date

Drwn By: BJM
Desg By: GEH
Chkd By: BJM
Aprvd By: GA
Date: -

ALDEN RESEARCH LABORATORY, INC.
30 SHREWSBURY ST, HOLDEN, MA
(508) 829-6000, WWW.ALDENLAB.COM

POSEIDON WATER
HUNTINGTON BEACH DESALINATION FACILITY
BRINE DISCHARGE LINEAR DIFFUSER

Job Number: POSEIDON

Drawing No: C-1

Sheet 1 of 1

Appendix B

UM3 Results

Contents of the memo box (may not be current and must be updated manually)
Project "C:\Plumes\Plumes\UM3 Port Number
Determination" memo
memoRuns" memo

Model configuration items checked: Report effective dilution; Current vector averaging;
  Channel width (m) 100
Start case for graphs 1
Max detailed graphs 10 (limits plots that can overflow memory)
 Elevation Projection Plane (deg) 0
Shore vector (m,deg) not checked
 Bacteria model : Mancini (1978) coliform model
 PDS sfc. model heat transfer : Medium
 Equation of State : S, T
 Similarity Profile : Default profile (k=2.0, ...)
 Diffuser port contraction coefficient 1
 Light absorption coefficient 0.16
 Farfield increment (m) 200
 UM3 aspiration coefficient 0.1
  Output file: text output tab
  Output each ?? steps 10
  Maximum dilution reported 20
 Text output format : Standard
 Max vertical reversals : to max rise or fall

/ UM3. 7/24/2018 11:59:10
Case 1; ambient file C:\Plumes\Plumes\UM3 Port Number Determination.001.db; Diffuser table record 11:

Ambient Table:

Depth	Amb-cur	Amb-dir	Amb-sal	Amb-tem	Amb-pol	Decay	Far-spd	Far-dir	Disprsn	Density
m	m/s	deg	psu	C	kg/kg	s-1	m/s	deg	m0.67/s2	sigma-T
0.0	0.0	90.00	33.50	20.00	0.0	0.0	-	-	0.0	23.64277
7.380	0.0	90.00	33.50	20.00	0.0	0.0	-	-	0.0	23.64277

Diffuser table:

P-dia	VertAng	H-Angle	SourceX	SourceY	Ports	Spacing	MZ-dis	Isoplth	P-depth	Ttl-flo	Eff-sal	Temp	Polutnt
(ft)	(deg)	(deg)	(m)	(m)	()	(ft)	(m)	(concent)	(ft)	(MGD)	(psu)	(C)	(ppm)
1.2800	60.000	45.000	0.0	0.0	14.000	14.360	100.00	0.0	17.800	62.500	62.400	22.000	1000.0

Simulation:
Froude No: -5.797; Strat No: 0.0000; Spcg No: 11.22; k: 1.64E+5; eff den (sigmaT) 45.40553; eff vel 1.636(m/s);
Current is very small, flow regime may be transient.

Step	Depth (ft)	Amb-cur (m/s)	P-dia (ft)	Polutnt (ppm)	net Dil ()	netCLdil ()	x-posn (ft)	y-posn (ft)	Iso dia (m)	
0	17.80	1.000E-5	1.280	1000.0	1.000	0.0	0.0	0.0	0.3901;	
10	17.24	0.0	1.535	829.7	1.205	1.000	0.232	0.232	0.4678;	
20	16.50	0.0	1.896	678.5	1.474	1.000	0.544	0.544	0.5778;	
30	15.60	0.0	2.357	555.2	1.801	1.000	0.942	0.942	0.7184;	
40	14.52	0.0	2.959	455.6	2.195	1.097	1.457	1.457	0.9020;	
50	13.64	0.0	3.520	397.7	2.515	1.257	1.919	1.919	1.0729;	
60	13.02	0.0	3.966	364.6	2.743	1.371	2.284	2.284	1.2088;	
70	12.55	0.0	4.338	343.0	2.915	1.458	2.586	2.586	1.3223;	
80	12.19	0.0	4.659	327.8	3.051	1.526	2.843	2.843	1.4201;	
90	11.91	0.0	4.940	316.3	3.161	1.581	3.068	3.068	1.5059;	
100	11.68	0.0	5.191	307.4	3.253	1.627	3.268	3.268	1.5822;	
110	11.50	0.0	5.416	300.2	3.331	1.666	3.447	3.447	1.6507;	
117	11.39	0.0	5.560	295.9	3.380	1.690	3.564	3.564	1.6947;	begin overlap;
120	11.35	0.0	5.618	294.3	3.398	1.699	3.612	3.612	1.7123;	

130	11.22	0.0	5.790	289.8	3.450	1.725	3.763	3.763	1.7649;	
140	11.12	0.0	5.938	286.4	3.491	1.746	3.904	3.904	1.8098;	
150	11.03	0.0	6.065	283.7	3.525	1.762	4.037	4.037	1.8486;	
160	10.96	0.0	6.176	281.5	3.553	1.776	4.164	4.164	1.8823;	
170	10.91	0.0	6.272	279.6	3.577	1.788	4.285	4.285	1.9116;	
180	10.86	0.0	6.355	277.9	3.598	1.799	4.401	4.401	1.9370;	
190	10.82	0.0	6.426	276.5	3.617	1.808	4.513	4.513	1.9588;	
200	10.80	0.0	6.487	275.2	3.634	1.817	4.623	4.623	1.9773;	
210	10.78	0.0	6.538	273.9	3.650	1.825	4.731	4.731	1.9927;	
220	10.77	0.0	6.579	272.8	3.666	1.833	4.837	4.837	2.0052;	
230	10.76	0.0	6.611	271.7	3.681	1.840	4.941	4.941	2.0150;	
231	10.76	0.0	6.613	271.6	3.682	1.841	4.952	4.952	2.0158;	local maximum rise or fall;
240	10.77	0.0	6.634	270.6	3.695	1.848	5.046	5.046	2.0221;	
250	10.78	0.0	6.649	269.5	3.710	1.855	5.150	5.150	2.0266;	
260	10.80	0.0	6.656	268.4	3.725	1.863	5.255	5.255	2.0288;	
270	10.82	0.0	6.656	267.3	3.741	1.870	5.361	5.361	2.0287;	
280	10.86	0.0	6.648	266.2	3.757	1.879	5.469	5.469	2.0264;	
290	10.90	0.0	6.634	264.9	3.775	1.888	5.579	5.579	2.0220;	
300	10.95	0.0	6.614	263.5	3.795	1.897	5.691	5.691	2.0158;	
310	11.02	0.0	6.588	262.0	3.816	1.908	5.808	5.808	2.0079;	
320	11.10	0.0	6.557	260.4	3.841	1.920	5.928	5.928	1.9986;	
330	11.19	0.0	6.523	258.4	3.869	1.935	6.053	6.053	1.9882;	
340	11.29	0.0	6.487	256.2	3.903	1.951	6.184	6.184	1.9772;	
350	11.42	0.0	6.450	253.6	3.943	1.972	6.322	6.322	1.9660;	
360	11.57	0.0	6.416	250.5	3.992	1.996	6.467	6.467	1.9556;	
370	11.74	0.0	6.388	246.7	4.054	2.027	6.622	6.622	1.9469;	
379	11.93	0.0	6.371	242.6	4.123	2.061	6.770	6.770	1.9418;	end overlap;
380	11.95	0.0	6.369	242.1	4.131	2.066	6.787	6.787	1.9414;	
390	12.19	0.0	6.357	236.8	4.223	2.111	6.964	6.964	1.9375;	
400	12.48	0.0	6.347	231.0	4.330	2.165	7.155	7.155	1.9346;	
410	12.83	0.0	6.344	224.4	4.456	2.228	7.363	7.363	1.9337;	
420	13.26	0.0	6.351	217.0	4.607	2.304	7.590	7.590	1.9359;	
430	13.77	0.0	6.374	208.7	4.792	2.396	7.841	7.841	1.9428;	
440	14.41	0.0	6.420	199.1	5.023	2.512	8.119	8.119	1.9567;	
450	15.22	0.0	6.498	188.1	5.317	2.658	8.432	8.432	1.9807;	
460	16.25	0.0	6.625	175.4	5.700	2.850	8.785	8.785	2.0193;	
470	17.59	0.0	6.821	160.9	6.213	3.107	9.189	9.189	2.0790;	
480	19.36	0.0	7.119	144.4	6.925	3.463	9.654	9.654	2.1699;	
490	21.79	0.0	7.571	125.8	7.952	3.976	10.20	10.20	2.3078;	
495	23.35	0.0	7.881	115.7	8.646	4.323	10.50	10.50	2.4021;	bottom hit;
500	25.22	0.0	8.265	105.2	9.510	4.755	10.84	10.84	2.5191;	
510	29.46	0.0	9.173	86.23	11.60	5.798	11.49	11.49	2.7960;	
520	34.21	0.0	10.23	70.72	14.14	7.071	12.09	12.09	3.1183;	
530	39.54	0.0	11.45	58.00	17.24	8.621	12.65	12.65	3.4887;	
538	44.28	0.0	12.54	49.49	20.21	10.10	13.08	13.08	3.8223;	stop dilution reached;

Horiz plane projections in effluent direction: radius(m): 0.0; CL(m): 5.6402
Lmz(m): 5.6402
forced entrain 1 0.0 -8.070 3.822 0.122
Rate sec-1 0.0 dy-1 0.0 kt: 0.0 Amb Sal 33.5000
;
11:59:10. amb fills: 4