Technical Memorandum

To: Ms. Josie McKinley, Poseidon

From: Kimbal Hall, Michael Rounds, George Hecker and Greg Allen

Date: January 18, 2018

Re: **Multi-Port Linear Diffuser: Zone of Initial Dilution for Poseidon's Huntington Beach Desalination Plant**

Alden Research Laboratory, Inc. (Alden) has conducted a computational fluid dynamic (CFD) model study of Poseidon Water Surfside's (Poseidon) proposed Huntington Beach Desalination Plant (HBDP) brine discharge structure. The CFD model study was conducted to determine the distance to the edge of the Zone of Initial Dilution (ZID) as described below or mixing to the model boundary of 3,000 ft whichever comes first as well as the dilution ratios at various contour lines. Initial Dilution is defined in Appendix I of the California Ocean Plan Desalination Amendment (COPDA) as follows:

> *For shallow water submerged discharges, surface discharges, and nonbuoyant discharges, characteristic of cooling water wastes and some individual discharges, turbulent mixing results primarily from the momentum of discharge. Initial dilution, in these cases, is considered to be completed when the momentum induced velocity of the discharge ceases to produce significant mixing of the waste, or the diluting plume reaches a fixed distance from the discharge to be specified by the Regional Board, whichever results in the lower estimate for initial dilution.*

The proposed discharge structure consists of a 14-port linear diffuser described in Alden's Technical Memorandum dated July 31, 2018 (Alden, 2018) and revised on November 8, 2018 (provided in Appendix A).

In addition to the ZID analysis, Alden used the CFD model to evaluate the geometry of the plume rise and interaction of the falling plume with the bottom. The results of this analysis were compared to UM3 model results presented in Alden 2018. In particular, the distance where salinity is predicted to be 2 ppt above ambient was determined.

Finally, per the December 18, 2018 request of the Santa Ana Regional Water Quality Control Board, the CFD model study was also used to evaluate seabed velocities in the vicinity of the diffuser discharge structure to determine the potential for suspension and transport of benthic sediment for the 14-port diffuser design.

1.0 Model Selection

The numeric modeling software selected for this study was the commercial CFD code ANSYS-Fluent (Fluent). Fluent is a three-dimensional CFD program which provides detailed three-dimensional hydrodynamic characteristics within the near-field. The software solves the Reynolds-averaged Navier-Stokes (RANS) equations to predict steady-state and transient flow fields in the model domain. Creation, transport and dissipation of turbulent kinetic energy is simulated using the two-equation k-omega shear stress transport (SST) model. The effect of temperature and salt concentration (salinity) on density are both simulated as well, and fluid buoyancy is included in the momentum and turbulence transport equations.

2.0 CFD Model Development

The CFD model domain includes the existing discharge tower, the header pipes to the ports, the Tideflex valve ports, the riprap around the header pipe, and the surrounding ocean extending approximately 1,500 feet north and south of the diffuser, 3,000 feet seaward and 500 feet landward. The seafloor is sloped seaward at a constant slope of 2%, with the shallow end of the model having a depth of 14.2 feet, and the deep end of the model having a depth of 84.2 feet. The depth at the linear diffuser is 24.2 feet below MLLW with the port discharge 17.8 feet below MLLW. The complete model domain is shown in Figure 1.

The ocean conditions in the model are quiet, with no current and no waves. This condition minimizes dilution at the diffuser. A constant pressure boundary (correcting for hydrostatic pressure) was used as the outlet boundary condition along the sides of the domain. The seabed and diffuser structure were treated as walls with a no-slip, impermeable boundary condition. The water surface was treated as a zero-shear plane.

The proposed linear diffuser needs to mix the brine to a concentration below 2 ppt above background levels within 100 meters of any of the nozzles per the COPDA. This 100 m zone (also Brine Mixing Zone or BMZ) is outlined in Figure 2.

The linear diffuser with the existing discharge tower is shown in Figure 3. Riprap was included in the model around the linear diffuser header pipes with a 20° downward slope away from the pipes.

The brine discharge flow condition at each of the 14 ports was specified with a flow rate of 6.907 cfs, a temperature of 22°C (71.6°F), and a salinity of 62.4 ppt (see Table 1). Each port is shaped as a diamond with an open area of 1.28 ft^2. The shape and dimensions of the valves were recommended by Tideflex. The inlet flow boundary was located inside the Tideflex nozzles at the flange location where the cross section begins to transition from round to diamond. Inclusion of the tapered portion of the nozzle helps to achieve the correct trajectory of the jet leaving the Tideflex nozzle.

A computational cell size of 0.1 feet was used for the area in the vicinity of the nozzles. The mesh within 30 feet of the linear diffuser expanded from the nozzles at a rate of 5% to a maximum of 12-inch tetrahedral cells. Outside this zone, the mesh expanded to a horizontal spacing of 10-ft, with 32 cells spread evenly across the depth of the water column. This results in 8.3 million computation cells within the model domain.

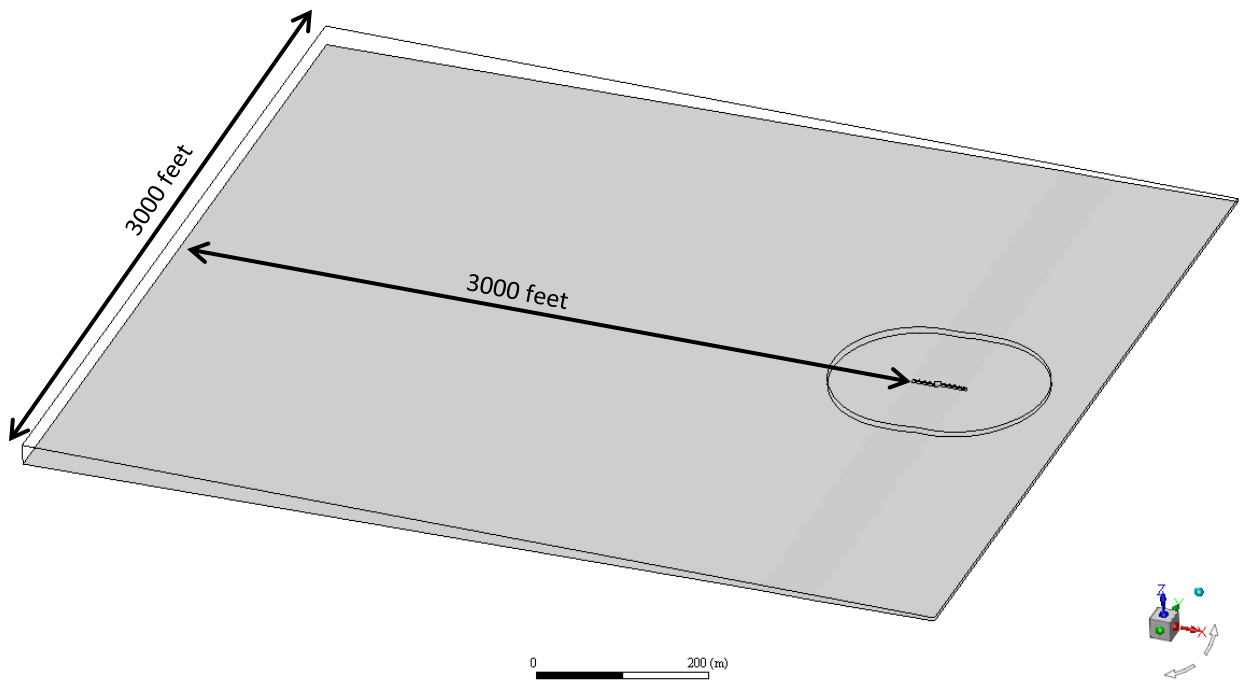

Figure 1: Model Domain with Boundary Conditions

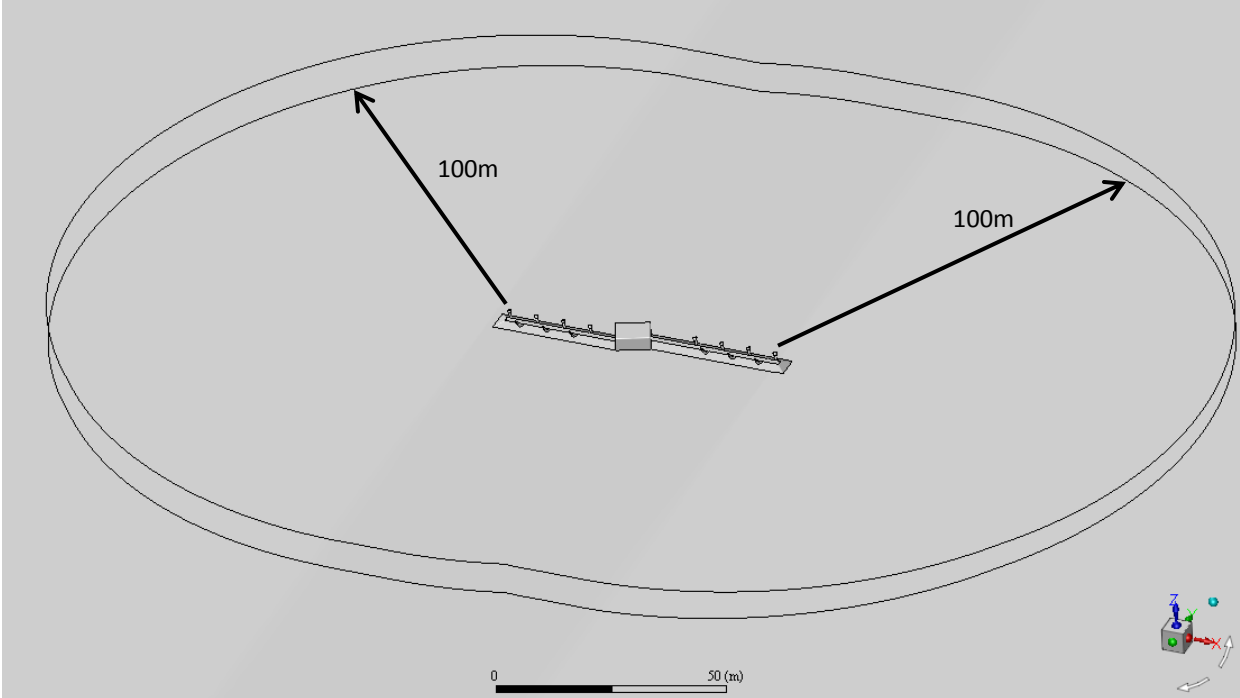

Figure 2: Linear Diffuser with 100-m Brine Mixing Zone

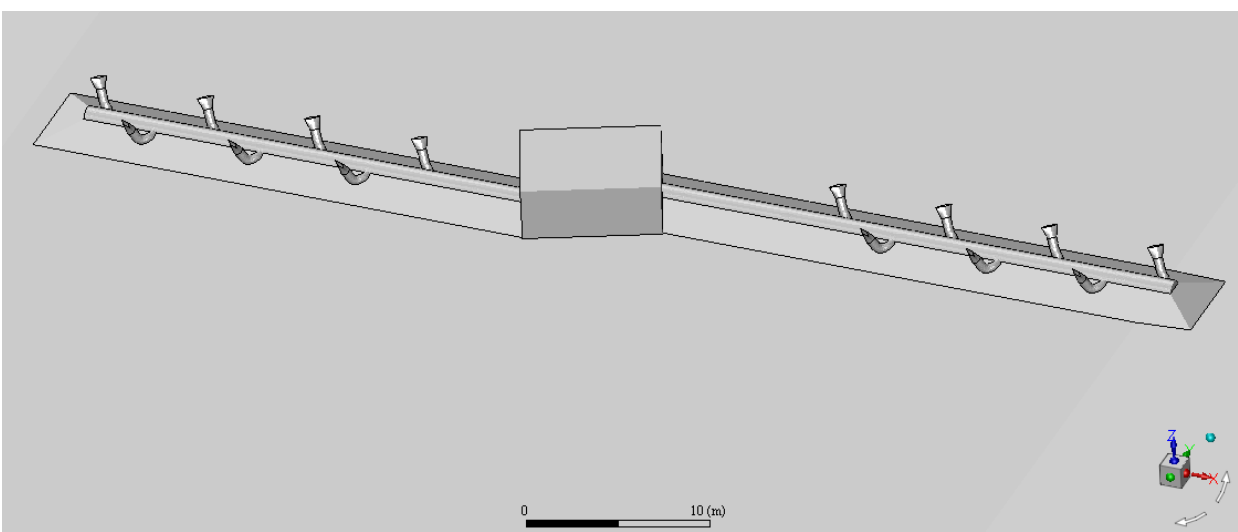

Figure 3: Linear Diffuser with Tideflex Nozzles and Riprap

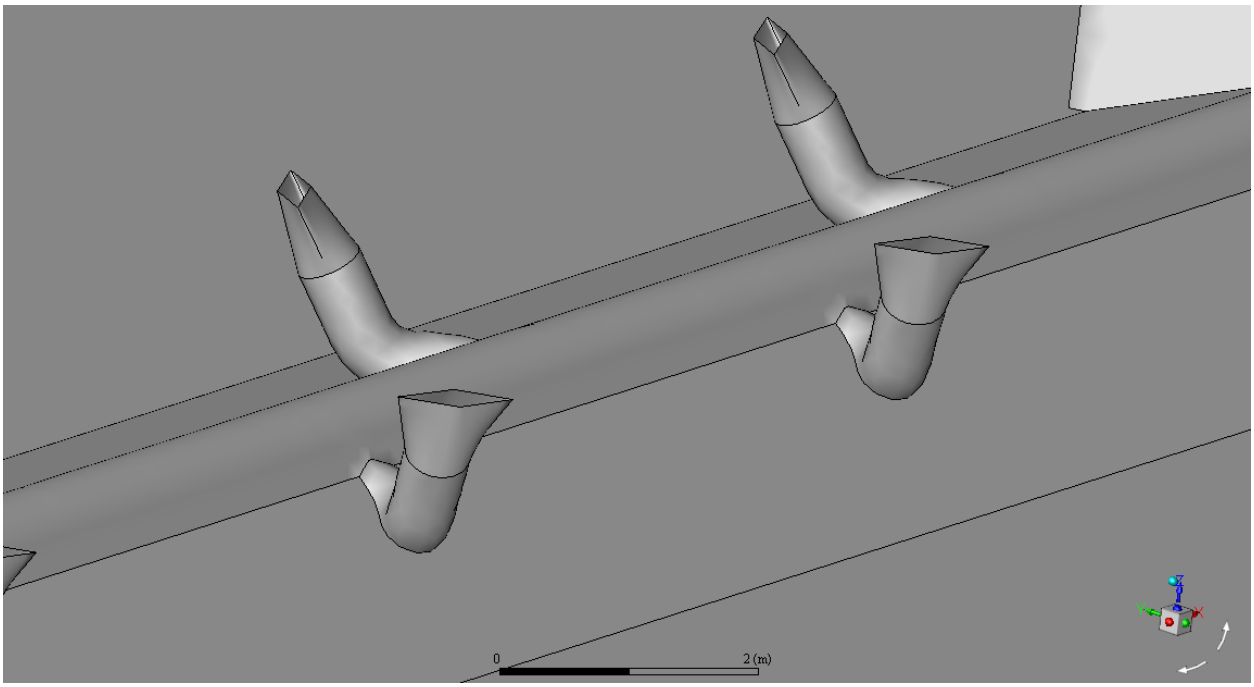

Figure 4: Detailed View of Tideflex Nozzles and Riprap

The density of sea water was calculated using a user-defined function (UDF), which is a separate sub-routine written in the programing language C. The UDF calculates the density of sea water using a linearized function based on temperature and salinity according to the following equation:

$$\rho - \rho_o \cong a(T - T_o) + b(S - S_o)$$

Where:

ρ	= density	(kg/m^3)
ρ_o	= reference density	(kg/m^3)
a	= temperature coefficient	(0.15 kg/m^3/°C)
T	= temperature	(°C)
T_o	= reference temperature	(°C)
b	= salinity coefficient	(0.78 kg/m^3/ppt)
S	= salinity	(ppt)
S_o	= reference salinity	(ppt)

Although the density of sea water is non-linear at colder temperatures, it becomes practically linear at temperatures and salinities of interest (above 20°C [68°F] and 33.5 ppt). Although pressure has an effect on density, the depths we are concerned with are fairly shallow and result in a negligible effect. The reference condition used in this analysis for the ambient

condition is 20°C (68°F) with a salinity of 33.5 ppt, which has a density of 1023.6 kg/m^3 (Table 1).

Table 1: CFD Input Boundary Conditions

CFD Inputs:	Units:	Ambient	Brine
Salinity	(ppt)	33.5	62.4
Temperature	(°C)	20	22
Density	(kg/m^3)	1023.6	1046.4
Number of Ports	(-)	-	14
Flow Rate per Port	(CFS)	-	6.907
Total Flow	(CFS)	0	96.7
	(MGD)	0	62.5

3.0 CFD Results

Results are presented below in three sections:

1. ZID analysis and Dilution Ratios
2. Plume analysis
3. Benthic suspension analysis

Zone of Initial Dilution (ZID) Analysis

Initial Dilution is defined in Appendix I of the California Ocean Plan Desalination Amendment (COPDA) as follows:

> *For shallow water submerged discharges, surface discharges, and nonbuoyant discharges, characteristic of cooling water wastes and some individual discharges, turbulent mixing results primarily from the momentum of discharge. Initial dilution, in these cases, is considered to be completed when the momentum induced velocity of the discharge ceases to produce significant mixing of the waste, or the diluting plume reaches a fixed distance from the discharge to be specified by the Regional Board, whichever results in the lower estimate for initial dilution.*

The three-dimensional nature of the flow causes a net flow seaward, which turns all 14 jets offshore; however, the jets are all spaced far enough apart that they do not combine before they impinge on the bottom. This offshore momentum helps direct the plume downslope into deeper water. After the initial momentum-driven mixing, the density carries the brine down the slope and farther seaward. Contours of bottom salinity across the whole domain are presented in Figure 5.

The highest salinity lies along the axis of the linear diffuser, as this is the center of the offshore momentum created by the salinity plume from the diffuser. The bottom salinity along this line is plotted in Figure 6. Salinity and dilution of selected points are also listed in Table 2. The extent of the ZID is the point where the momentum-driven mixing ends and the trend of salinity versus distance approaches that for the gravity flow down the bottom slope. The edge of the ZID was determined to be the distance where the salinity is 1% above the background salinity of 33.5 ppt, which is 33.8 ppt. A salinity of 1% above ambient (33.8 ppt) is reached at a distance of 1675 ft from the farthest offshore nozzle as shown in Figure 6.

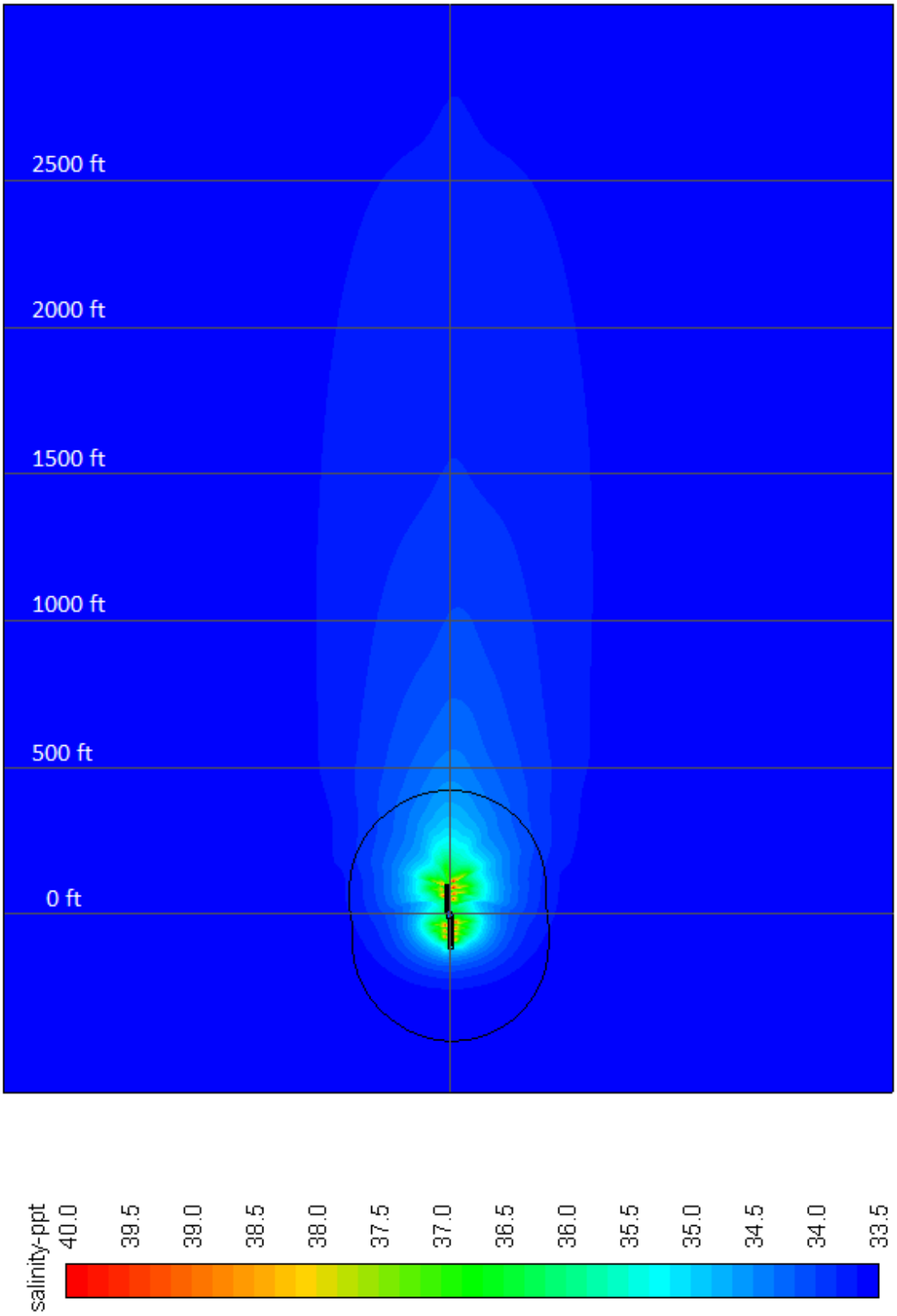

Figure 5: Contour of Salinity on Sea Floor (ppt)

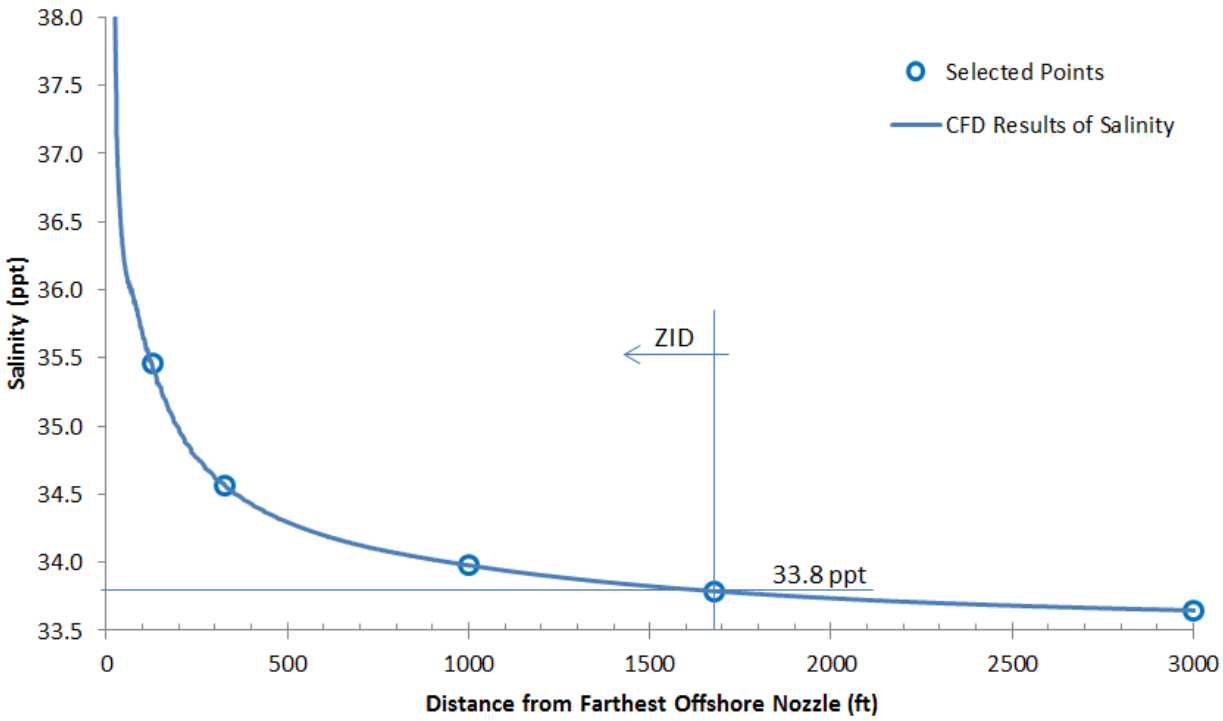

Figure 6: Salinity along Centerline of Linear Diffuser (ppt)

The BMZ requirement for the diffuser is that the salinity shall not be more than 2 ppt above background levels at distances greater than 100 m from any of the ports. The bottom salinity within the 100-m zone is presented in Figure 7, with the contour plot clipped so that it does not show values lower than 35.5 ppt (2 ppt or greater than the background level of 33.5 ppt).

The 2-ppt above background contour stays well within the 100-m zone. The highest salinity that is measured at the 100-m boundary is 34.6 ppt, only 1.1 ppt above the background level of 33.5 ppt. As shown in Figure 7, the 35.5 ppt contour varies from 30 ft to 130 ft with an average radius of 73.4 feet and a total area of 1.09 acres. The CFD computed BMZ radius compares well with the previously calculated BMZ of 63.2 ft and a total area of 0.64 acres (Alden, 2018) and provides greater detail of salinity variability due to the brine discharge flow patterns from multiple jets.

Table 2: Salinity and Dilution Ratio vs. Offshore Distance from Linear Diffuser

	Distance Seaward from Farthest Offshore Nozzle (ft)				
Description	**130**	**328**	**1000**	**1675**	**3000**
Salinity (ppt)	35.5	34.6	34.0	33.8	33.6
Dilution	15	27	61	100	208

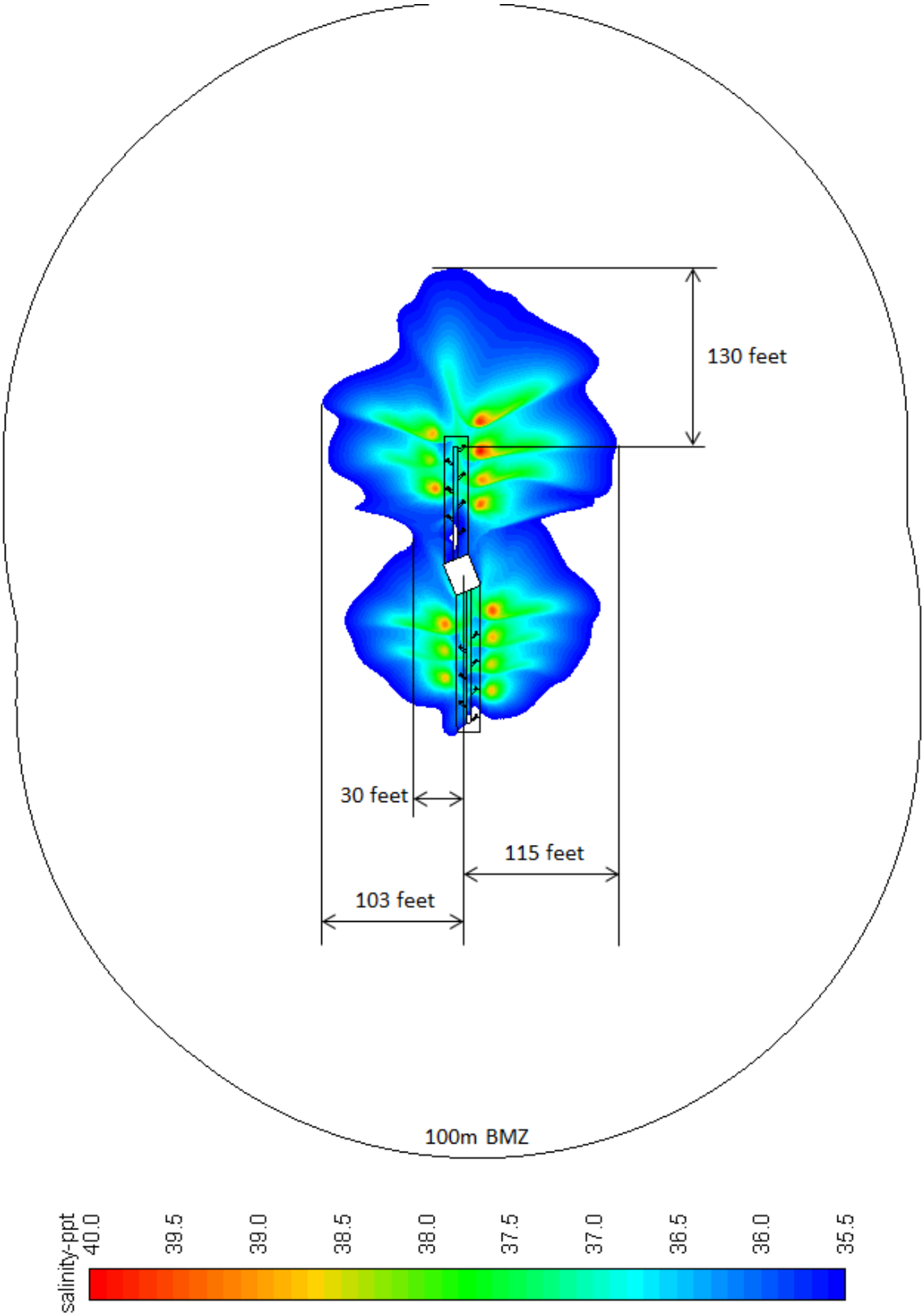

Figure 7: Contours of Salinity greater than 35.5ppt

Plume Analysis

Alden evaluated the geometry of the plume rise and interaction of the falling plume with the bottom as part of the CFD study. Alden developed the diffuser design following procedures described in Roberts 2018a along with the brine and ambient conditions presented above. The design of the linear diffuser is shown in Appendix A.

Detailed views of the plumes, as well as their 3D nature are shown in Figure 8 and Figure 9 with pathlines colored by salinity and velocity, respectively. The peak plume height is approximately 8 feet below MLLW as shown in Figure 11. The jets do not follow straight planes as the bulk seaward flow caused by the linear diffuser pushes the jets off their centerline. One of the straighter trajectories is the flow from the 10th nozzle (nozzle 1 is nearest to shore, nozzle 14 is farthest from shore). The axis of this jet is shown in red in Figure 9, with contour plots of velocity and salinity in Figure 10 and Figure 11.

The plume initially rises to a terminal height of approximately -8 feet below MLLW (Figure 11) and then falls to the ocean floor 20 feet from the discharge location. This is consistent with the 1D modeling (UM3) as shown in Table 3.

The salinity at the impact point for most jets is about 40 ppt (Figure 7), which is a dilution ratio of approximately 4.5. This is a lower dilution ratio than was determined by the the UM3 model. The reason for this is because there are several nearby nozzles that result in entraining water with elevated salinity from neighboring plumes. The UM3 model presented results of only a single jet and did not evaluate the interaction of multiple jets.

As shown in Table 3 the CFD plume results compares well with the UM3 model presented in Alden 2018.

Table 3: Plume Analysis Comparison of CFD Results and UM3 Results

Description	CFD Results	UM3
Centerline Terminal Rise below Seawater Surface	-10.5 feet	-10.8 feet
Terminal Rise below Seawater Surface	-8 feet	Not Available
Distance from Diffuser at Seabed Impact Point	15 to 20 feet	14.8 feet
Dilution at Seabed Impact point	4.5	8.64

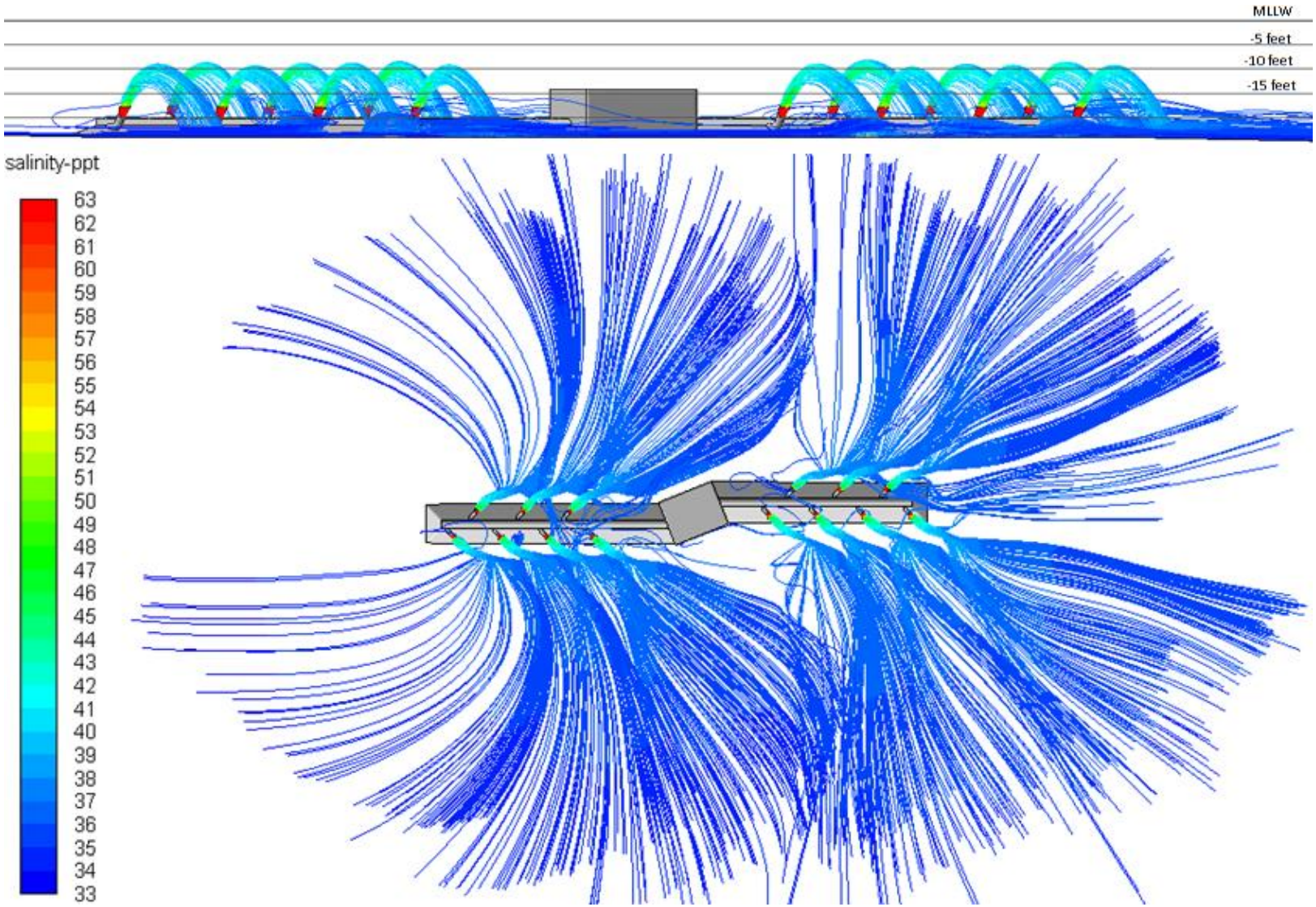

Figure 8: Pathlines Colored by Salinity

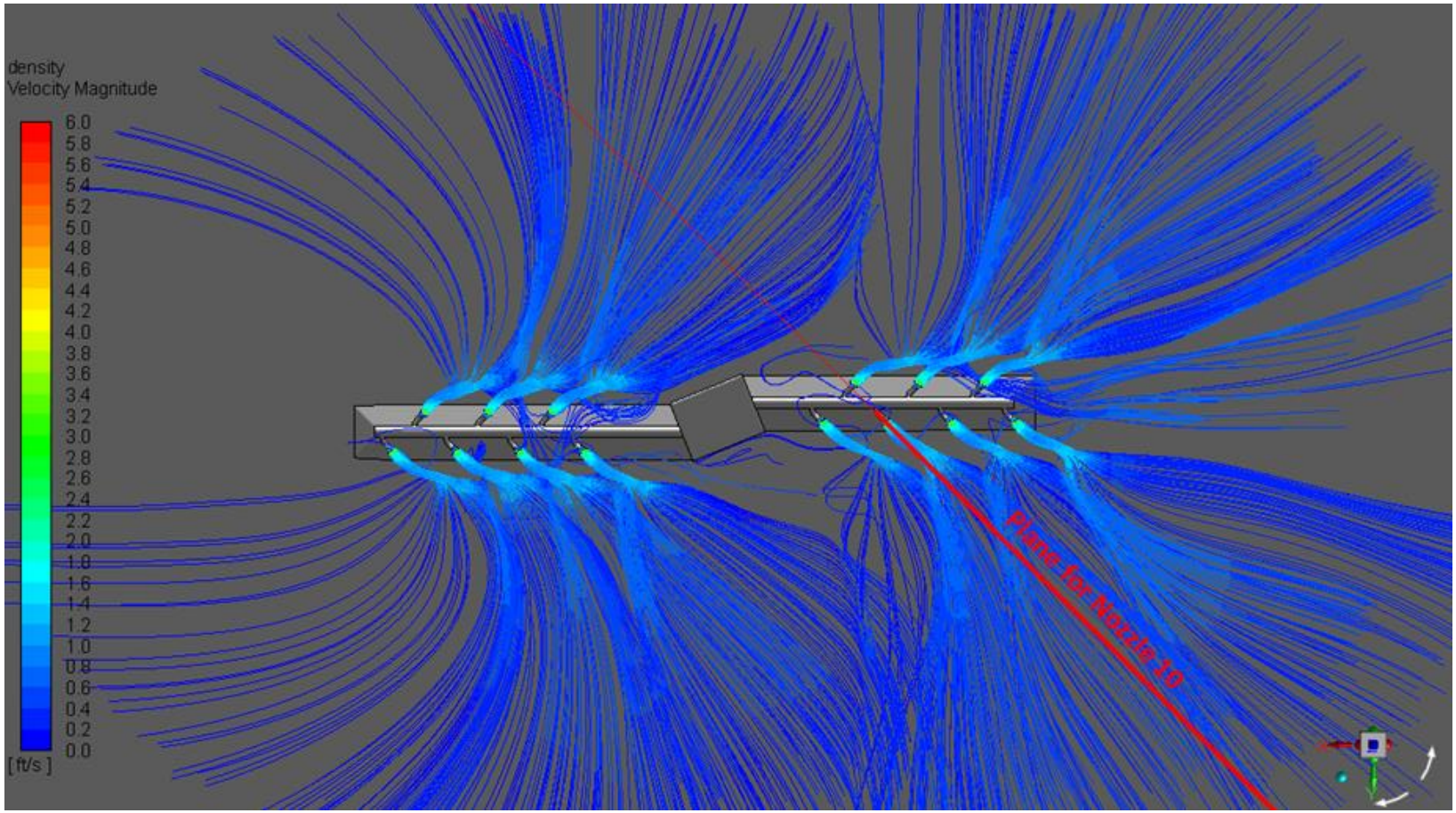

Figure 9: Pathlines Colored by Velocity (ft/s) Including Axis for Nozzle 10

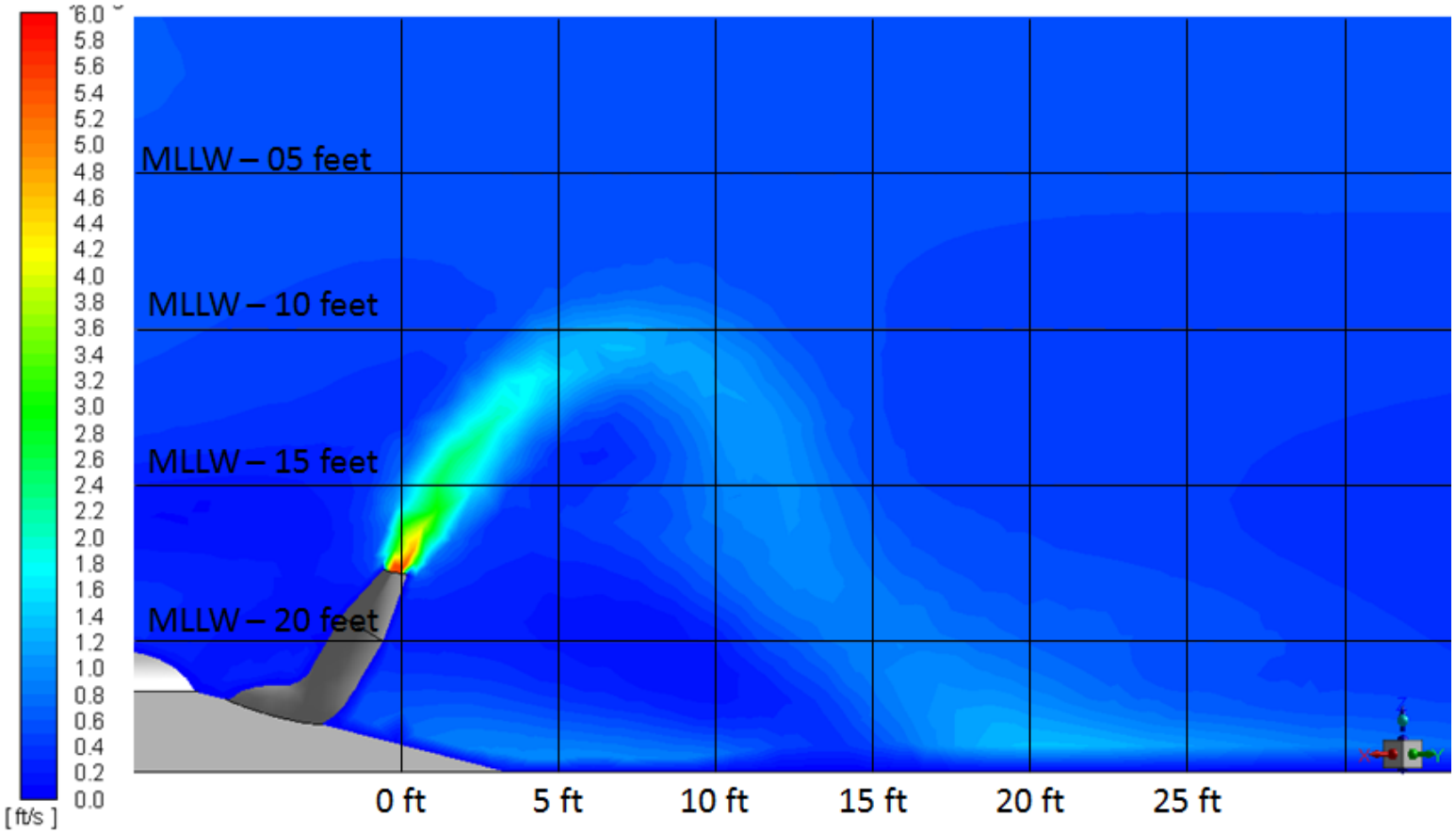

Figure 10: Velocity (ft/s) on Cross Section of Nozzle 10

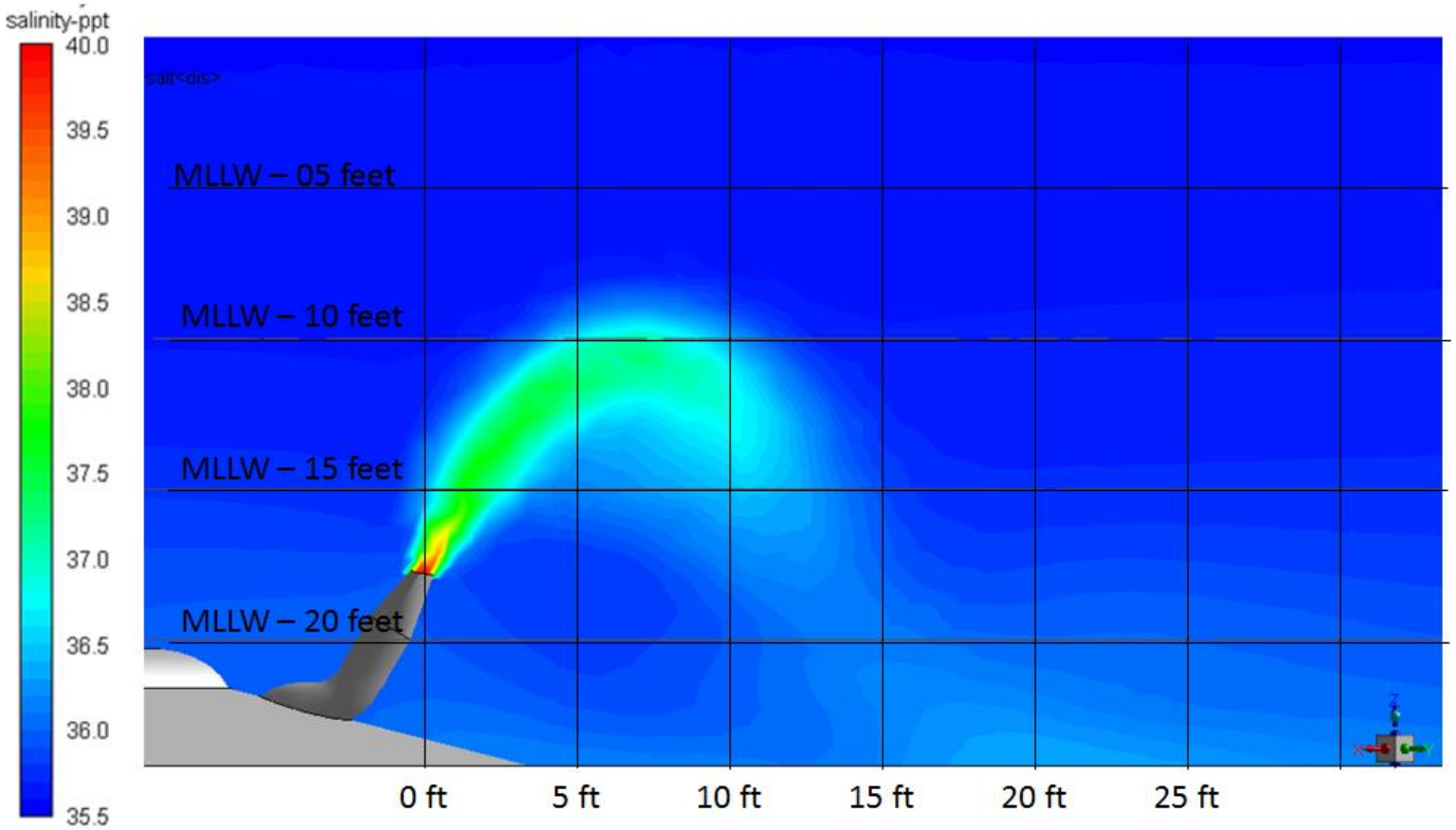

Figure 11: Salinity (ppt) on Cross Section of Nozzle 10

Benthic Sediments

The Ocean Plan states that "*Multiport diffusers shall … minimize suspension of benthic sediments*". As a result, the CFD model was used to determine if the discharge from the 14-port diffuser generates shear stresses on the seabed that are sufficient to mobilize benthic sediments.

Per Jenkins report (Jenkins, et al. 2017), grain sizes on the surface of the seabed are comprised primarily of very fine sand with grain sizes on the order of 0.1 mm. These are underlain by layers of very coarse sand on the order of 1-mm grain sizes (as presented in Jenkins, et al. (2017) Wentworth grain size chart for phi-unit conversions and grain size classifications). Per the Hjulstrom Curve in Figure 19 of Jenkins report (Jenkins, et al. 2017), the finest offshore sediments have a threshold of motion (critical current speed) at critical u = 0.65 ft/s. The layer of coarse sand has a threshold of motion at critical u = 0.9 ft/s per the Hjulstrom Curve.

As demonstrated in Figure 10, the initial trajectory of each discharge jet is upward at 60 degrees from the seabed and significantly reduces the velocity of the plume before it falls to the seabed. Benthic areas above 0.65 ft/s where fine sand entrainment may occur are shown in Figure 12. Benthic areas above 0.9 ft/s where coarse sand entrainment may occur are shown in Figure 13. Per the COPDA, this model does not include any ambient ocean currents which will affect the trajectory of the plumes. Based on the inputs used to initialize the model, the suspension of benthic sediments would be temporary since the plume impact points would remain relatively constant in a confined area. After the fine sediments are transported from the impact points, equilibrium would be reached where only coarser benthic sediments with a higher threshold of motion would remain.

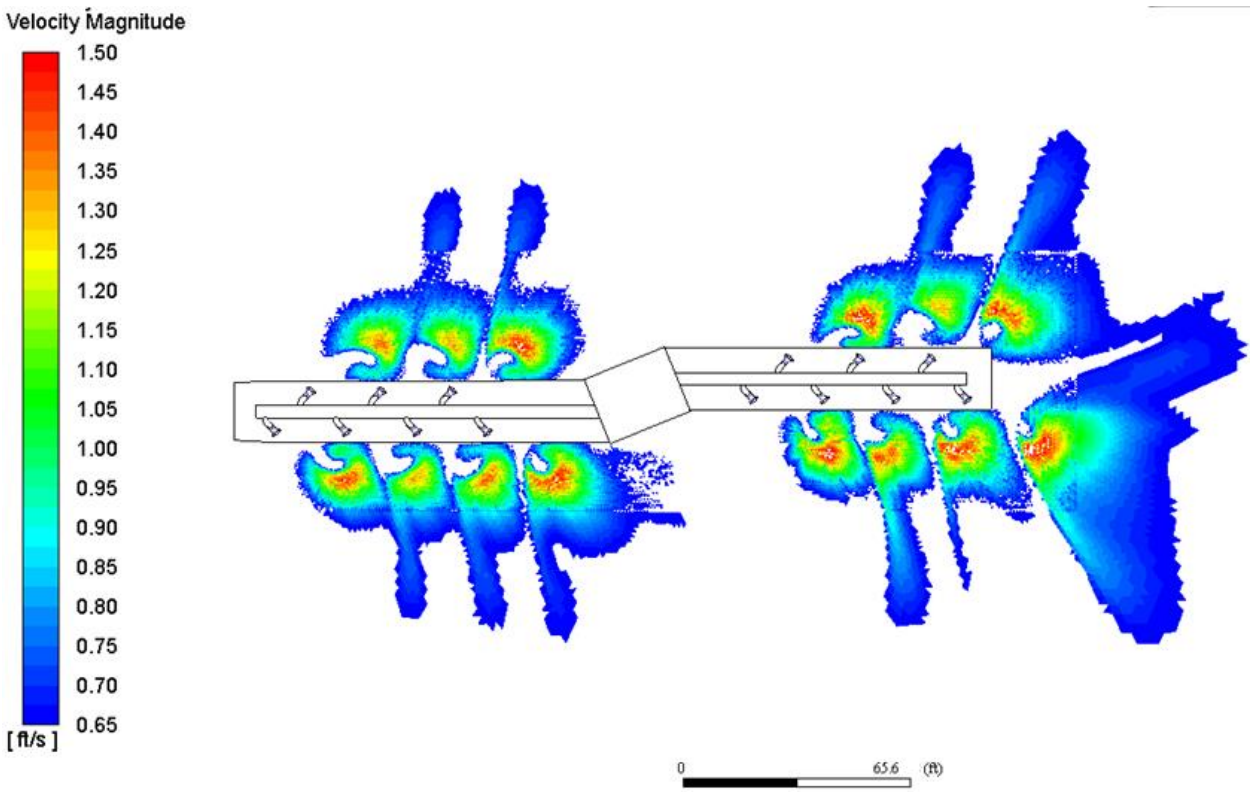

Figure 12: Velocities near the bottom, above 0.65 ft/s

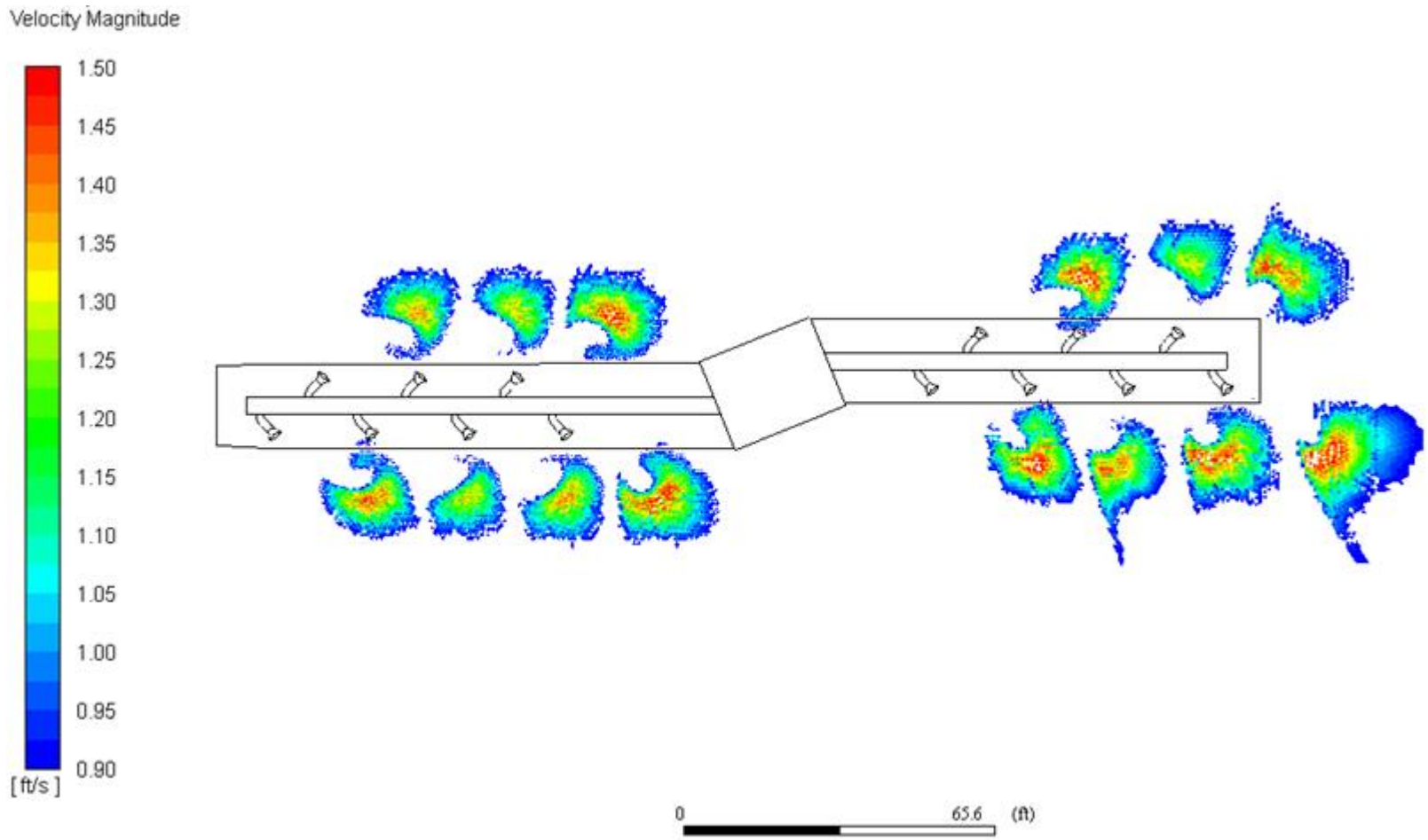

Figure 13: Velocities near the bottom, above 0.9 ft/s

References

Alden, 2018. *Linear Diffuser Optimization and Design for Poseidon's Huntington Beach Desalination Plant. July 31, 2018,* Holden, MA: Alden Research Laboratory, Inc..

Jenkins, S., 2017. *Alternative Hydrodynamic Analysis of the Alden Designed 3-port Duckbill Diffuser Retrofit at Huntington Beach Desalination Facility (HBDF)-Version 2,* s.l.: Submitted to Poseidon Resources Surfside.

Roberts, P., 2018a. *Brine Diffusers and Shear Mortality,* Atlanta, GA: prepared for Eastern Research Group.

Appendix A

Proposed Linear Diffuser Design

ALL ELEVATIONS REPRESENTED ON THIS DRAWING REFER TO THE MEAN LOWER LOW WATER (MLLW) TIDAL DATUM. BASED ON A SURVEYOR'S LETTER FROM JOHNSON – FRANK & ASSOCIATES, INC. DATED JULY 13, 2016 THE HUNTINGTON BEACH GENERATING STATION DRAWING ELEVATION DATUM IS IN NAVD88 AND TO CONVERT TO MLLW SIMPLY ADD 0.18 FT TO NAVD88.
HUNTINGTON BEACH GENERATING STATION DRAWING 546937 IS THE BASIS FOR THE EXISTING FEATURES REPRESENTED ON THIS DRAWING.

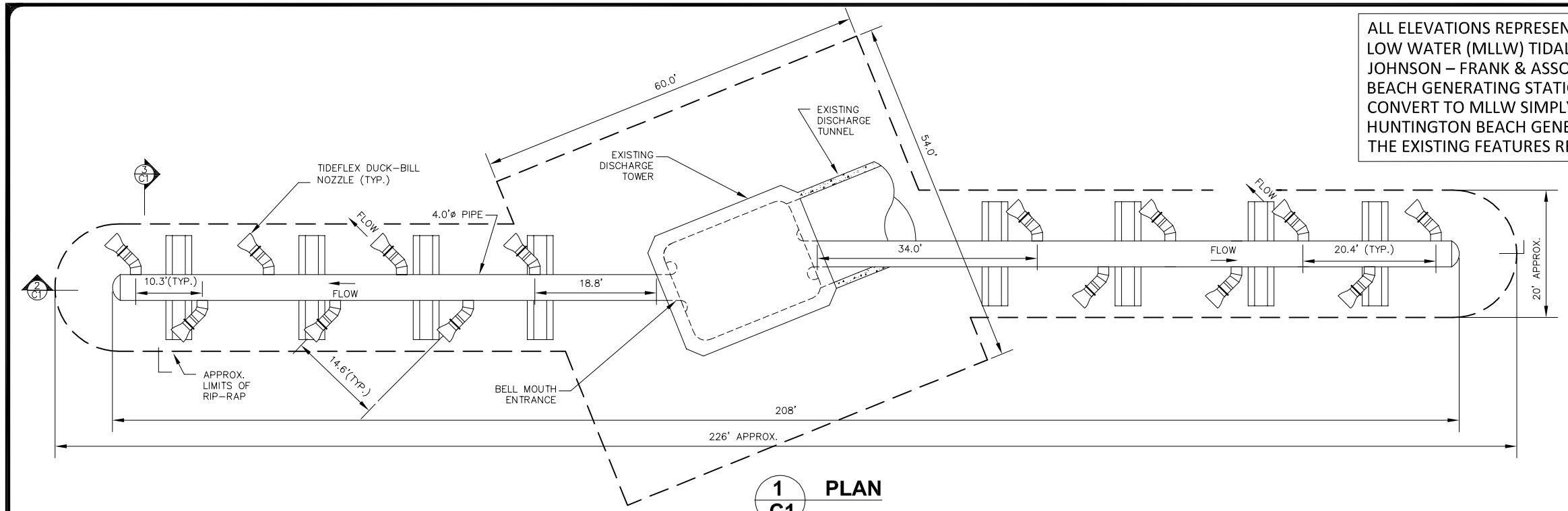

1 C1 **PLAN**

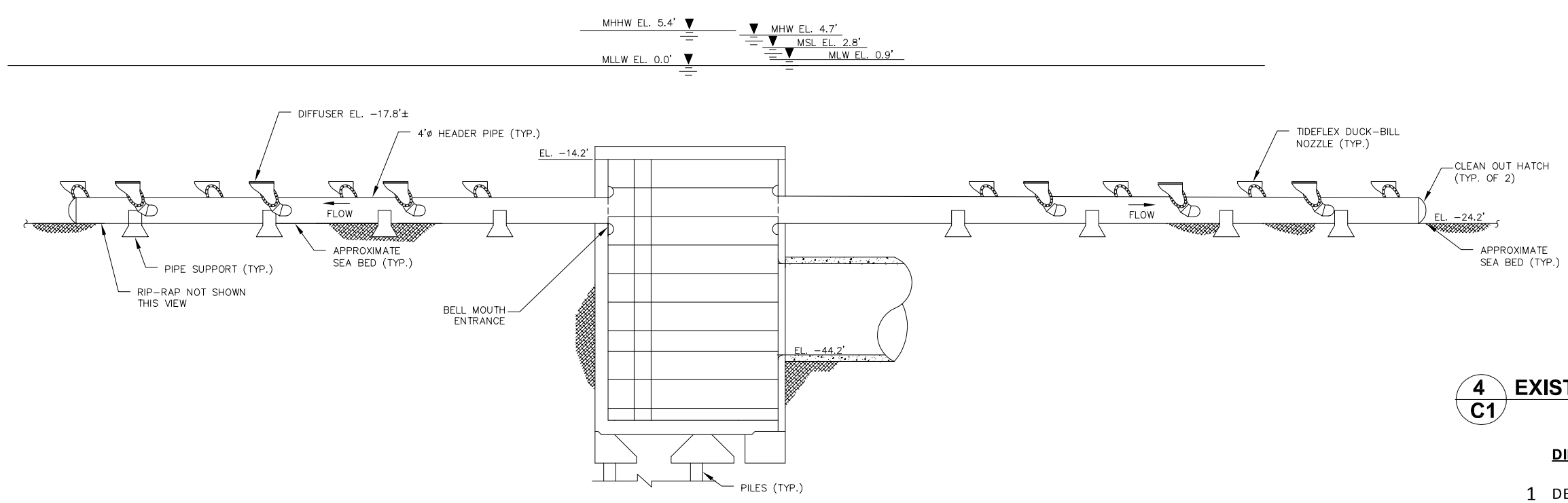

2 C1 **SECTION**

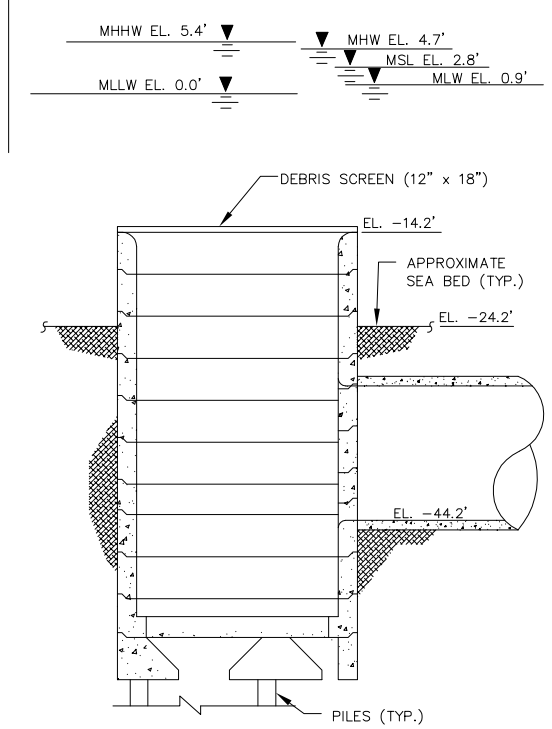

4 C1 **EXISTING DISCHARGE TOWER - ELEVATION**

DIFFUSER DESIGN ASSUMPTIONS

		FLOW (MGD)	SALINITY (PPT)
1	DESIGN FLOW CONDITIONS		
	AVERAGE ANNUAL	56.7	63.1
	PEAK DAILY	62.5	62.4
	START UP & MAINTENANCE	127	33.5

2 14 DISCHARGE PORTS
3 NOZZLE.: TIDEFLEX TBD, EQUIVALENT DIA.: 1.28'
4 ANGLE FROM HORIZONTAL: 60 DEG.
5 PORT DISCHARGE ELEVATION: -17.8' (MLLW)
6 APPROXIMATE RIP-RAP AREA: 6375 FT^2

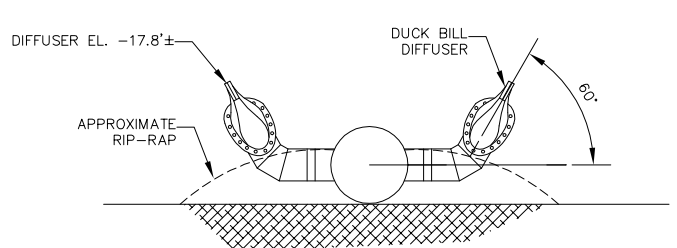

3 C1 **SECTION- DUCK BILL NOZZLE**

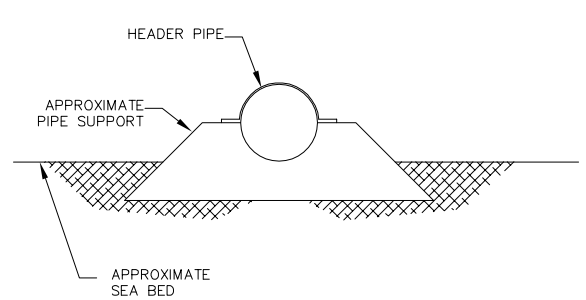

3 C1 **SECTION- PIPE SUPPORT**

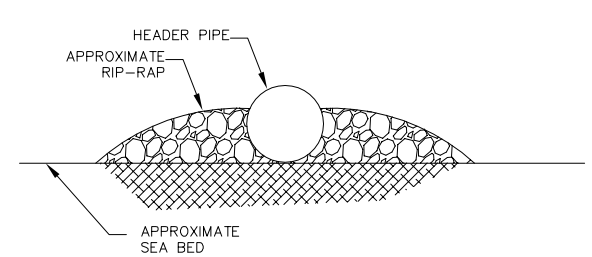

3 C1 **SECTION- RIP-RAP**

No.	Revision Description	REVIEW	Drwn	Chkd	Date
0			BJM		11/6/2018

Drwn By: BJM
Desg By: GEH
Chkd By: BJM
Aprvd By: GA
Date: -

ALDEN RESEARCH LABORATORY, INC.
30 SHREWSBURY ST, HOLDEN, MA
(508) 829-6000, WWW.ALDENLAB.COM

POSEIDON WATER
HUNTINGTON BEACH DESALINATION FACILITY
BRINE DISCHARGE LINEAR DIFFUSER

Job Number: POSEIDON

Drawing No: C-1

Sheet 1 of 1