TO: MS. JOSIE MCKINLEY
5780 FLEET STREET
SUITE 140
CARLSBAD, CA 92008

FROM: GEORGE HECKER AND GREG ALLEN
SENIOR CONSULTANT AND DIRECTOR, ENVIRONMENTAL SERVICES
ALDEN RESEARCH LABORATORY, INC.
30 SHREWSBURY STREET
HOLDEN, MA 01520

SUBJECT: HUNTINGTON BEACH DESALINATION FACILITY DISCHARGE DIFFUSER DESIGN

DATE: FEBRUARY 23, 2017

Introduction

Alden Research Laboratories, Inc. (Alden) was contracted by Poseidon Water (Poseidon) to develop a conceptual design for an offshore brine discharge diffuser for the Huntington Beach Desalination Plant (HBDP) in Huntington Beach, California. This memorandum is focused on describing the basic design concept, construction and operation of the proposed diffuser for the planned brine discharge. The HBDP is to be constructed at the site of the existing Huntington Beach Generating Station (HBGS) and will use some structures of the HBGS cooling water system, particularly the intake and discharge towers and associated piping both during the initial co-located operation and subsequent long-term stand-alone operation of the HBDP.

Alden prepared a similar report in 2015. Since 2015, the diffuser design criteria have changed to accommodate co-located operations but at a lower maximum volume of discharge water from the HBGS' cooling water system (i.e. 127-254 MGD) than initially contemplated (i.e. 387 MGD).

This technical memorandum provides the details of a diffuser design that will achieve the objectives of the State Water Board's Ocean Plan Amendment ("OPA"). Specifically, the revised diffuser design will maximize dilution, minimize the size of the brine mixing zone, minimize the suspension of benthic sediments, and minimize mortality of all forms of marine life due to Project construction and operation.

If joint operation of the HBGS Unit 1 only and the HBDP occur, it is anticipated to last for a short period of time, after which the HBGS will be shut down and only the HBDP will operate on the site.

The Huntington Beach Generating Station (HBGS)

This power station consists of four steam turbine generating units with a total capacity of 880 MW. The condenser cooling water system is the "once through" type with offshore submerged intake and discharge structures. The intake structure (Tower 1) is located about 1,840 ft. offshore (about 2,430 ft. from the screen well) and has a solid velocity cap to minimize the entrapment of fish in the intake system (see Figure 1). The intake tower rises about 16 ft. above the ocean floor where the total water depth is about

27 ft. but varies with the tide level. Water is conveyed to the power plant through a 14 ft. diameter conduit with an on-shore free surface screening structure and a subsequent pump-well (intake) structure. The condensers for each unit are supplied with seawater by eight cooling water pumps (two for each unit). After passing through the condenser, the warmed seawater (ΔT=18°F) is returned to a closed conduit discharge chamber located adjacent to the intake screening structure. From there, the water is returned to the ocean via a single 14 ft. diameter conduit about 2,130 ft. long and a discharge structure (Tower 2) about 1,500 ft. offshore identical to the intake structure except for the absence of a velocity cap. Instead, the discharge tower is capped with a 12-inch by 18-inch grating constructed from one-inch by three-inch flat bars. The overall layout of the cooling water system for the HBGS is shown in Figure 2, which was derived from Southern California Edison (SCE) drawing number 559464. Other references give somewhat different lengths for the 14 ft. pipe. Flows are discussed in the next section.

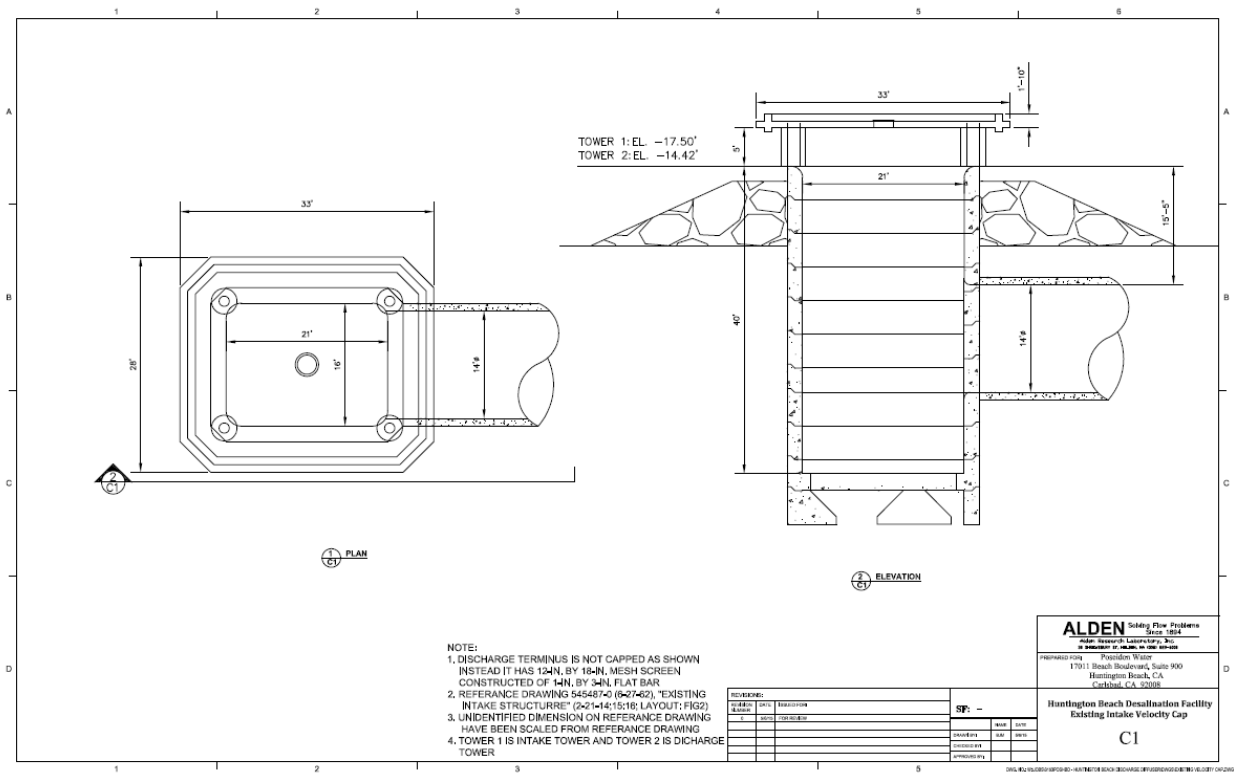

Figure 1. Existing HBGS intake structure with velocity cap.

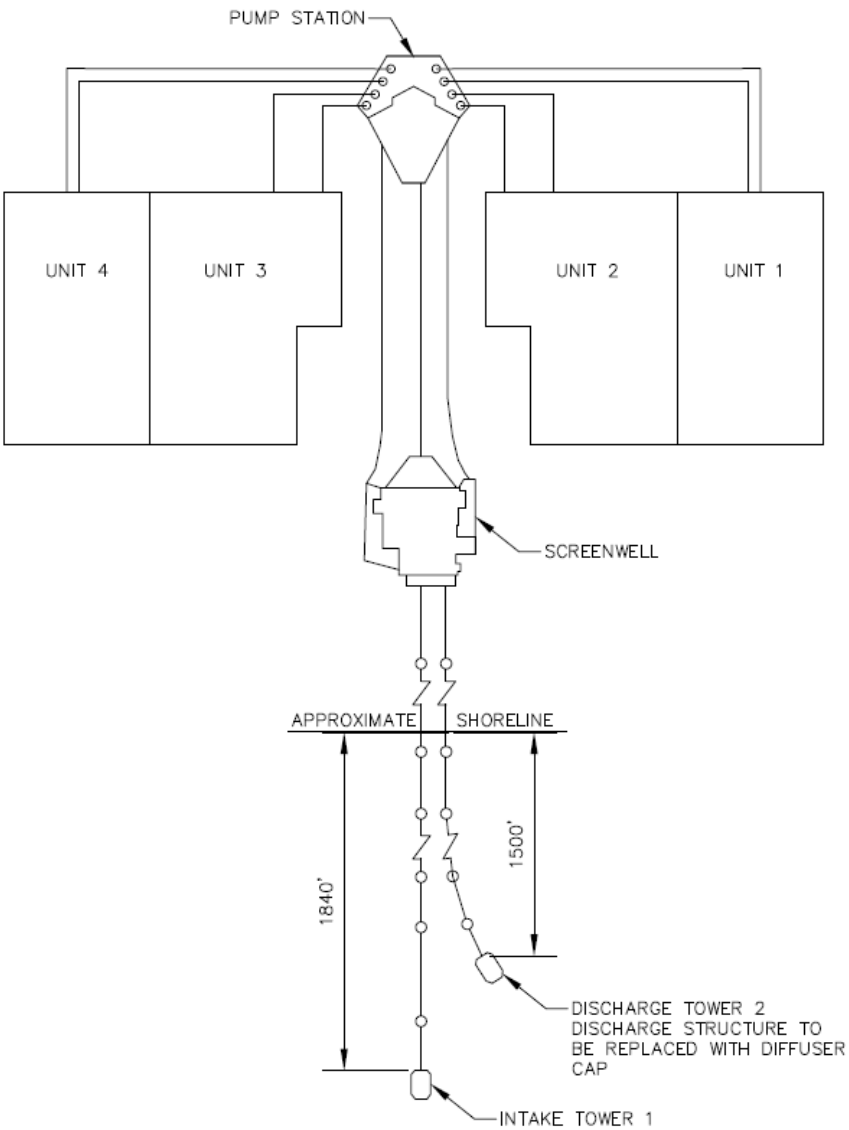

Figure 2. General arrangement of the HBGS cooling water system.

The 14 ft. conduit from the intake tower and the 14 ft. conduit to the discharge tower will also remain in place and will be used by the HBDP.

Onshore, a new pumping station will be constructed and connected to the existing HBGS cooling water system to provide feed-water to the HBDP. The discharge from the desalination plant will be connected to the existing discharge chamber just upstream of the 14 ft. discharge pipe (see Figure 3).

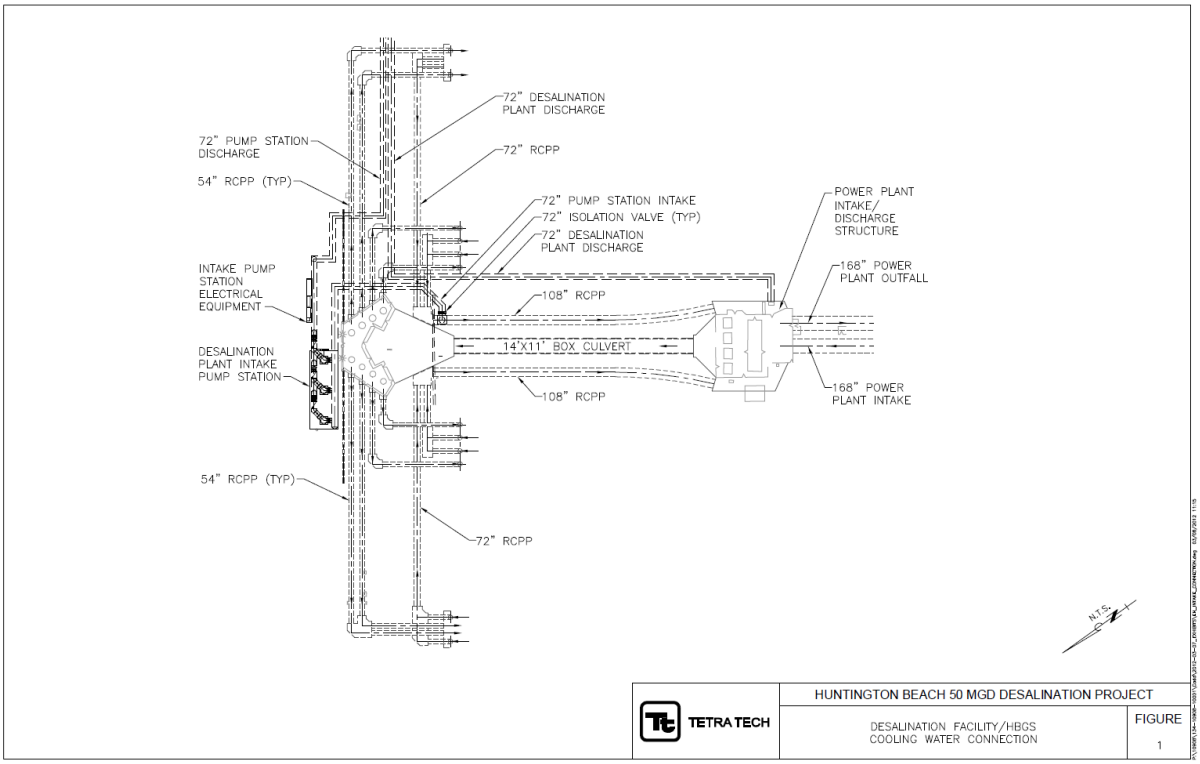

Figure 3. Connection of the HBDP piping to the HBGS cooling water system.

Technological enhancements will be made to the top of the outlet tower. The existing grating and top two modular rings in the tower will be removed and replaced with a new diffuser cap, as shown in Figure 4.

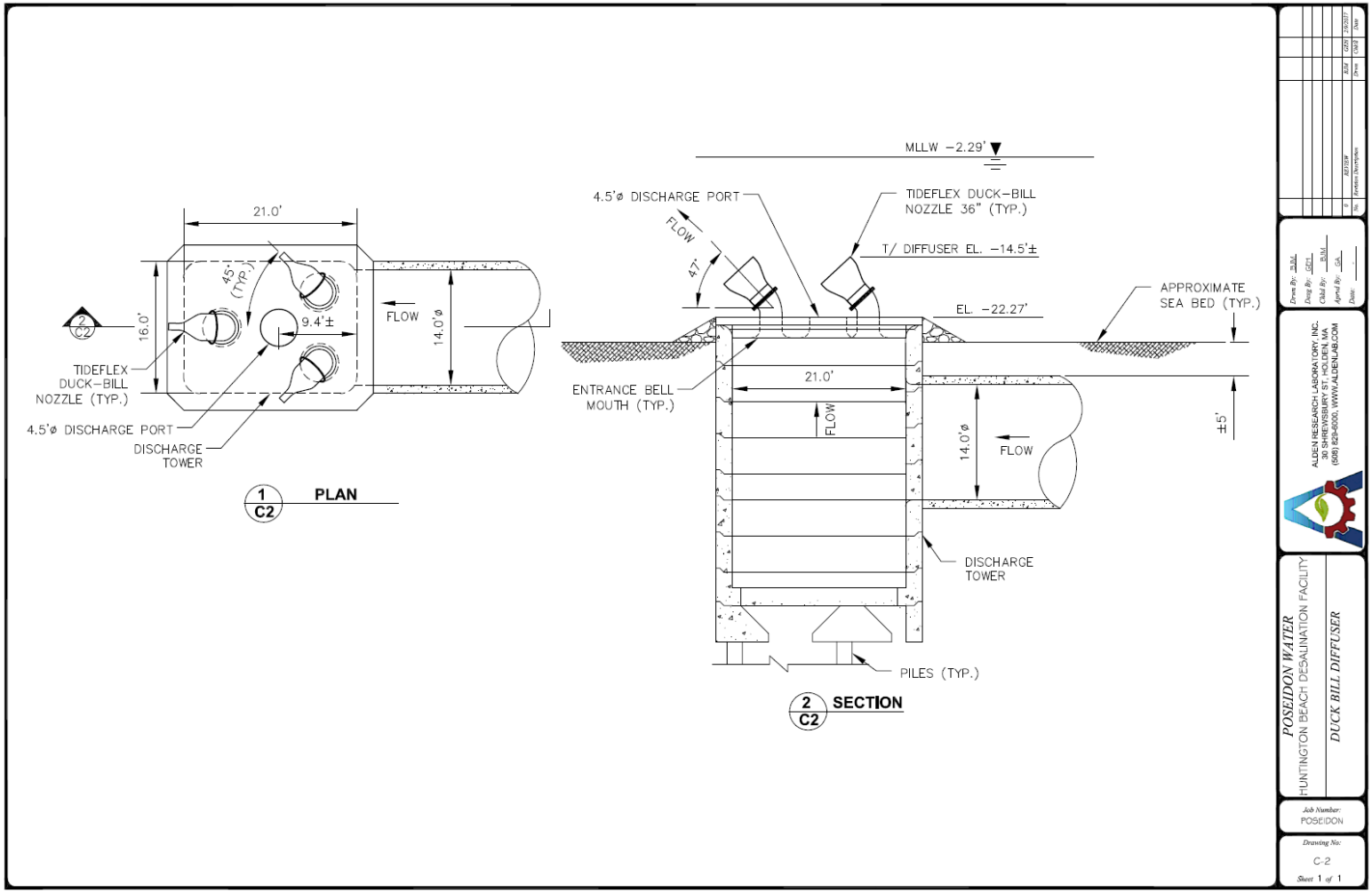

Figure 4. Conceptual design of proposed diffuser with three 36-inch duck-bill valves and a 4.5 ft. dia. port to be added to the top of the discharge tower. (A deflector plate or grid may be placed over the port to limit surface effects.)

Flows and Velocities

Poseidon has previously considered several diffuser designs that could accommodate the long term stand-alone operation of the HBDP as well as a co-located operation with the HBGS cooling water system. The final diffuser design considerations will be made in due course during the design phase of the project. This memo therefore describes the conceptual design. The HBGS currently operates two generating units (254 MGD) and synchronous condenser operations (133 MGD). As a result, previous co-located diffuser designs could accommodate up to 387 MGD. (Alden 2015)

The HBGS is scheduled to decommission its once-through cooling system by December 31, 2020. The HBDP is anticipated to be in commercial operation as early as 2021, with start-up operations occurring in 2020. Barring an extension of the HBGS' once-through cooling operations, the HBDP will operate under stand-alone conditions, with the potential for a very short-period of co-located operations with the HBGS. In addition, the HBGS anticipates discontinuing the synchronous condenser flow and phasing out the generating units one at a time. The synchronous condenser flow and one generating unit is anticipated to be decommissioned end of 2019 followed by the decommissioning of the second unit by end of 2020. Therefore, it is anticipated that if there is a co-located operating scenario, HBGS will operate only one generating unit or an intake and discharge flow of 127 MGD. (However, if HBGS does not retire one generating unit prior to HBDP commercial operations, the intake and discharge of the diffuser is designed to discharge up to 254 MGD.) Under long term stand-alone operation, the HBDP will have an average annual withdraw of approximately 106.7 MGD and will be responsible for the direct intake and discharge of seawater using the existing seawater intake and discharge facilities. The discharge technological modifications described below comply with the requirements of the Desalination Amendment (SWRCB 2015).

Under co-located operation, the cooling water flow of the HBGS is anticipated to be 127 MGD or 196 cfs. During co-located operation of the desalination plant, the desalination process removes a net of 50 MGD from the flow system, leaving 77 MGD or 119 cfs to be discharged back to the ocean. This 50 MGD net flow removal is the result of withdrawing about 106 MGD, removing the salt from 50 MGD for distribution, and returning about 56 MGD (about 87 cfs) to the system with almost twice the initial ocean salinity. Because 6 MGD is used for backwash and is not increased in salinity, the initial ocean salinity of 33.5 ppt is increased to about 63.1 ppt in the 56 MGD brine discharge. For co-located operation, the brine mixes with the HBGS flow in the discharge tunnel and is further diluted by the proposed diffuser. The mixed concentration in the discharge tunnel with 77 MGD is about 55.3 ppt.

For stand-alone operation of the desalination plant, the brine discharge would be about 56 MGD (87 cfs) at a salt concentration of about 63.1 ppt. The dilution to achieve the required 35.5 ppt (2 ppt above ambient) in 100 meters (328 ft.) would be accomplished with the proposed diffuser (see below) and subsequent dispersion by ocean currents. The diffuser discharge velocities for different flows are given in Table 1.

Table 1. Initial diffuser discharge velocities for various operating modes.

	Design Conditions				
Operating Description	**Flow (mgd)**	**Flow (cfs)**	**Discharge Velocity (ft./sec)**	**Number of Duck-bills & Port**	**Description**
Long-term Stand-alone Desal	56	87	10.1	3 & port closed	36" check valve
HBGS One Unit and Desal	77	119	11.9	3 & port closed	36" check valve
HBGS One Unit – No Desal Brine Discharge	127	196	15.1	3 & port closed	36" check valve
HBGS One Unit - No Desal Brine Discharge	127	196	9.5	3 & port opened	36" check valve & 4.5' port
HBGS Two Units – No Desal Brine Discharge	254	393	15.4	3 & port opened	36" check valve & 4.5' port

Tunnel velocities with the HBGS cooling water flow of 127 MGD without the HBDP brine discharge and with the additional port open (see section below on Proposed Diffuser Design) would be 1.3 ft./sec. For the discharge tunnel length of 2,130 ft. and accounting for bend and exit losses in the tower, this operation would produce a total pressure head loss of about 1.5 ft. This pressure head in the tunnel/tower would be above the external ocean pressure.

Tunnel velocities with the HBGS cooling water flow of 127 MGD without the HBDP brine discharge and with the additional port closed would also be 1.3 ft./sec. For the discharge tunnel length of 2,130 ft. and accounting for bend and exit losses in the tower, this operation would produce a total pressure head loss of about 3.7 ft. This pressure head in the tunnel/tower would be above the external ocean pressure.

For operation of the desalination plant alone with a discharge flow of about 56 MGD, the tunnel velocity would be only 0.5 ft./sec. Accounting for all losses and the head needed to produce the diffuser discharge velocity of 10.1 ft./sec (including diffuser pipe entrance losses), the total pressure head in the tunnel/tower with the additional port closed would be 1.6 ft. above the external ocean pressure. Therefore, operation of the HBDP stand-alone (port closed) would increase internal tower/tunnel/discharge chamber pressures by only about 0.1 ft. compared to operation of the HBGS at 127 MGD with the port open.

Proposed Diffuser Design

The primary goals of the conceptual design of the proposed diffuser are to:

- enhance the initial dilution of the brine discharge before it interacts with the sea floor,
- produce a salt concentration of less than 2 ppt over ambient within 100 meters,
- require minimal pressure head increase above the present HBGS operation,

- achieve a net off-shore brine plume direction, and
- develop a practical construction scheme that minimizes plant down-time.

Based on the OTC policy, the HBGS must be fully decommissioned by end of 2020. AES currently plans on decommissioning the HBGS and one of the two currently operating units by end of 2019. The last unit is anticipated to be decommissioned by end of 2020. Therefore, Poseidon believes that the diffuser will be installed prior to end of 2020 and anticipates full HBDP and one HBGS unit in operations. Under this scenario, the maximum flow that could be discharged through the diffuser would be up to 127 MGD. However, if the HBGS schedule for decommissioning the first of the two operating power generating units (up to 254 MGD) were to be extended, a diffuser designed for 127 MGD would present a flow restriction to the cooling circuit and thus limit the operations of the HBGS. In order to mitigate this risk, the diffuser would incorporate a large diameter port allowing for discharge of higher flows. At the higher flow (254 MGD), Poseidon could also begin the wet commissioning. Wet commissioning consists of plant startup without brine discharge. Once HBGS decommissions one of the power generating units, the cooling water circuit would be permanently limited to no more than 127 MGD. This allows Poseidon to cap the open port, transition into operations, and begin to discharge brine.

The proposed diffuser has three 36" duck-bill check valves and one 4.5' diameter port; the number and diameter were selected to produce an <u>initial</u> discharge velocity of about 10 ft./sec for either HBGS operations and no HBDP brine discharge (additional port opened) or for the HBDP operating alone with port closed. By having the check valves and the additional port open with the HBDP not discharging brine (HBDP may have ambient salinity discharge during plant wet commissioning) and the HBGS one unit running with (127 MGD), the initial discharge velocity will be 9.5 ft./sec (see Table 1). With only the three 36" duck-bill check valves open during stand-alone operation of the HBDP (56 MGD), the initial discharge velocity will be 10.1 ft./sec. As discussed below, these brine discharges do not interact with the ocean floor until the plume velocities have been substantially reduced.

In plan view, the diffuser's duck-bill check valves are generally oriented to provide a net off-shore momentum. The horizontal angles between the check valves is 45 degrees to provide adequate flow separation for entrainment of ambient ocean water into each discharge jet and to fit the pipes into the available space.

Flow to the check valves would come from a new common plenum under the tower cap, which would otherwise be sealed. The plenum with imbedded pipes would sit on top of the existing tower after the existing grating and two tower riser rings are removed; all other existing elements of the tower and the 14 ft. diameter supply pipe would be used.

Operation of Diffuser

Initial dilution of the brine discharge (i.e., before interacting with the sea bed) depends on the initial discharge velocity, its direction, the density of the brine versus the ambient ocean water and the magnitude and direction of any ocean currents. The ambient ocean water has a salt concentration of about 33.5 ppt and a density of 1025 kg/m^3, whereas the brine has a salt concentration of about 63.1 ppt and a density of 1046 kg/m^3. To help prevent the brine from sinking immediately after discharge, the check valves are inclined upward at 47 degrees. This provides a longer arched flow path and more dilution

prior to the brine interacting with the bottom where dilution is limited to the upper side of the plume. The longer flow path also results in greater dissipation of velocity. Discharging at a much steeper angle (e.g., 60 degrees) would force the brine to interact with the water surface due to the relatively shallow submergence, where dilution is again limited to one surface of the plume. Discharging at steeper angles will also result in higher surface velocities and a visible "boil". It should be noted that, if required, a deflector plate or grid may be placed over the port to limit surface effects.

After reaching a maximum height (just under the water surface), the brine plume will start to sink due to its greater (although diluted) density. As it sinks, further dilution and dissipation of velocity occurs. Maximum velocities and flow induced shear therefore occurs prior to the brine plume interacting with the sea floor. Aft.er that point, the brine plume becomes a density current which is advected and dispersed further by ambient ocean currents.

The initial discharge velocities of about 10 ft./sec provide enhanced initial dilution but have limited effect on organisms since the relatively small zone of high velocity gradients occurs only near the ports and only lower settling velocities occur near the ocean bottom. Therefore, it is expected that negligible sea bed habitat will be negatively affected by desalination plant operation (or construction, see below). A "near-field" CFD numerical simulation would quantify the discharge trajectory, any jet interaction, velocity dissipation and brine dilution versus distance.

In plan view, the discharge check valves are oriented generally offshore to allow for the initial dilution water to flow unimpeded from the shore side of the diffuser. The net off-shore momentum propels the plume into deeper water to enhance dispersion of the brine with higher ocean currents than occur near the shoreline.

No public restrictions would be required during operation as the discharge velocities do not interact with the water surface and rapidly dissipate with distance away from the diffuser.

Diffuser Construction

The new discharge tower cap (diffuser) would be cast on shore with imbedded pipes, creating a single structural unit to move and install. A barge-mounted crane would be used to remove the existing grating and its supports from the discharge tower. Pre-fabricated sections (rings) of the existing discharge tower would be removed to increase submergence of the diffuser and this may require some side casting of the large rip-rap at the tower base. The new diffuser cap would be set in place with the barge-mounted crane. The construction activity that will occur near the sea floor includes the side casting of rip rap surrounding the tower and the temporary placement of the mooring legs of the construction barge.

When the HBGS decommissions one unit of two units and operates with only one unit (127 MGD), a cap would be installed by divers on the 4.5 ft. diameter port so that the brine discharge of the desalination plant occurs only through the three 36" duck-bill check valves for long-term stand-alone operation. It is anticipated that modification will be completed in one day.

Structural Considerations

Due to the higher velocity from the diffuser openings compared to the open top tower for the HBGS operation, there will be an increase in the tunnel/tower pressure. This increase in back pressure will exist for all the tide levels and will be transmitted by the tunnel to the structures on shore. Thus, there will be a small increase in the pump back pressure and any free surfaces in the discharge system. Structural integrity of the tunnel and effects of the change in back pressure on tunnel features such as man-hole covers and the top cover of the discharge chamber will also be evaluated during the design phase. Any required remedial measures will be taken.

The tower/tunnel pressure creates an upward force on the diffuser cap which is countered by its submerged weight. The diffuser cap may be sized to have a submerged weight of about twice the upward force. However, further evaluation of structurally integrating the new cap with the tower will be evaluated during the design phase.

Wave induced forces would be similar to those experienced by the existing intake velocity cap and such wave forces have not been a problem.