Los Angeles Department of Water & Power

CUSTOMERS FIRST

Eric Garcetti, Mayor

Board of Commissioners
Mel Levine, President
William W. Funderburk Jr., Vice President
Jill Banks Barad
Christina E. Noonan
Aura Vasquez
Barbara E. Moschos, Secretary

David H. Wright, General Manager

September 10, 2018

Public Comment
Proposed Recycled Water Policy Amendment
Deadline: 9/10/18 by 12 noon

RECEIVED
9-10-18
SWRCB Clerk

Ms. Jeanine Townsend
Clerk to the Board
State Water Resources Control Board
1001 I Street, 24th Floor
Sacramento, CA 95814

Dear Ms. Townsend:

Subject: Comment Letter – Proposed Recycled Water Policy Amendment

The Los Angeles Department of Water and Power (LADWP) would like to thank the State Water Resources Control Board (SWRCB) for the opportunity to comment on the perfluorooctane sulfonate (PFOS) and perfluorooctanoic acid (PFOA) Revisions to the Proposed Amendment to the Policy for Water Quality Control for Recycled Water (Proposed Amendment) released on August 27, 2018.

LADWP is currently making significant infrastructure investments to address environmental impacts and plan for the future, including for drought periods that are expected to become more frequent and more severe with climate change. Recycled water can offset potable water demands and is a key component in reducing overall potable water usage, especially during periods of water shortage. As per the Mayor's Executive Directive, the City of Los Angeles plans to reduce imported water purchases by 50% by 2025 and expand local water sources to account for at least 50% by 2035. As stated in the City of Los Angeles Water Integrated Resources Plan 5-Year Review, LADWP plans to increase recycled water use in its service territory to 59,000 acre-feet per year (AFY) by 2025, and has set a long-term goal to reach 75,000 AFY by 2040. As part of these goals, LADWP has updated its Recycled Water Master Plan to include other uses such as the use of recycled water for groundwater replenishment and surface water augmentation. LADWP is continually evaluating and pursuing opportunities to expand recycled water use, including in partnership with other local agencies.

As always, LADWP's commitment to the protection of public health is at the forefront of our efforts to expand recycled water use. LADWP commends the SWRCB on its continued work on the state's Recycled Water Policy, which will allow for the expanded use of recycled water and continued protection of human health. Since the last amendment in 2013, there have been scientific and technical advances that will support the expanded use of recycled water programs in California. With regards to the latest

proposed amendment, LADWP understands the SWRCB's concerns regarding PFOS and PFOAs in the environment and their potential presence in recycled water. These chemicals are manmade and have been applied to manufacture cookware, carpet, clothing, fabrics to enhance stain resistance and water repellency, aqueous film forming foams (AFFF), fire retardants, and many other products. These molecules comprise many carbon-fluorine bonds that contribute to their persistence in the environment, and have become nearly ubiquitous in the environment. The science regarding these compounds is evolving, including our ability to detect them and our knowledge about their environmental and health impacts (see Enclosure 1). LADWP believes working together will allow for practical and viable solutions that protect human health while promoting the development and use of recycled water supplies.

As we continue to work together, LADWP respectfully provides the following comments on the Proposed Amendment:

1. **Notification Levels and Regional Concentrations in Groundwater**

In some areas, the regional background levels in groundwater are higher than the stipulated notification levels of 14 ppt for PFOA and 13 ppt for PFOS. For these areas, monthly sampling would be required. Due to regional background concentrations, attaining the notification levels would not be possible and an attenuation study would be necessary. Given regional background concentrations, the SWRCB's proposal would result in perpetual and costly requirements, and it is not clear how the situation would be resolved.

For these reasons and as discussed elsewhere in this letter, LADWP is concerned with the ppt notification levels for PFOS and PFOA in these situations; LADWP notes that these notification levels were adopted without public comment and may be inconsistent with guidelines developed by others.

Further, LADWP notes the need to consider additional factors in developing policies to implement notification levels, including the need to develop recycled water supplies and regional water supply reliability while simultaneously protecting public health.

LADWP recommends that the SWRCB focus on identifying the sources of PFOA and PFOS and actions that can be taken to minimize ambient concentrations by focusing on the sources of these compounds. Perhaps finding a means to control the sources of these compounds would be more practical and effective, rather than trying to locate and treat groundwater in locations where these chemicals may have persisted for decades.

2. **Laboratory Testing**

It currently appears that few laboratories have the capability to reliably measure for PFOS or PFOA at the levels proposed in the amendment. Numerous factors affect a laboratory's ability to measure these compounds, including the availability and use of certified PFOS-free sample containers, procedures to minimize cross-contamination,

and the availability of certified PFAS-free water. In addition, it is currently costly to measure PFOA and PFOS at the proposed ppt levels.

USEPA is currently working on the development of new analytical methods and is expected to begin a multi-laboratory validation process later this year (see Enclosure 2).

LADWP recommends that the SWRCB coordinate with other efforts underway nationally. LADWP also recommends that the State undertake a study to determine the practical quantitation limits (PQLs) for these compounds and develop a program whereby laboratories could be audited and provide supporting data to demonstrate they are producing reliable and reproducible analytical results.

3. OEHHA Risk Assessment

LADWP is concerned that the state of knowledge regarding the health impacts of PFOA and PFOS continues to evolve, and that use has shifted to other, shorter-chain compounds. Comprehensive and critical reviews of available epidemiological studies are a key component of the process used to establish notification levels. It is not clear that the State has evaluated the available literature to support the published thresholds. Given past and current laboratory limitations, it is critical to evaluate the available data and studies to establish human health impacts.

Reverse osmosis (RO), one of the available treatment options, cannot handle the quantity of flow in local projects. The demand of the City of Los Angeles is 600 million gallons per day (mgd), which is much greater than the City's ability to treat with RO at a scale larger than pilot level.

Many recycled water supplies are used for non-potable uses, and even when recycled water becomes part of the drinking water supply, it is typically blended or mixed with other sources of water. For these reasons, any policy implementing notification levels should require notification based on the final concentration of PFOA and PFOS in water delivered to consumers.

As described below, more information is needed regarding the treatment process(es) that can remove both PFOA and PFOS and also related, shorter-chain fluorinated compounds. The State's Recycled Water Policy should consider the practical ability of water agencies to implement and deploy these technologies in order to effectively protect human health while minimizing environmental, energy, and other impacts.

4. Cost/Benefit

The treatment processes available to remove PFOAs and PFOS include RO and other expensive and energy-intensive alternatives that have a significant environmental "footprint" (See Enclosure 2). Further research is needed to determine if the same technologies that reduce concentrations of PFOA and PFOS will also reduce the concentrations of related, shorter-chain molecules. For example, breakthrough times

and treatment efficiency may vary for different compounds. It is important to "get this right," as it is paramount to protect human health and to use ratepayer funds effectively.

The necessary treatment technologies will impact decisions about whether or not to pursue recycled water projects. In Southern California and throughout the State, recycled water is a necessary component of a sustainable water supply, and it is important to ensure that the best science is used to determine the appropriate means to protect human health and minimize the environmental footprint and cost of necessary treatment. The proposed sampling and analysis requirements could place barriers on these projects and place more dependence on imported water supplies.

LADWP recommends that the SWRCB conduct a detailed literature review, identify the current state of the science regarding treatment technologies, and identify data gaps and information needs. LADWP looks forward to working with the SWRCB to identify appropriate and necessary revisions to the Recycled Water Policy to ensure that human health is protected and recycled water is efficiently and effectively integrated into regional water supplies.

In closing, LADWP is very concerned about the SWRCB's approach to regulating PFOS and PFOA. LADWP hopes to work with SWRCB staff on a solution that will encourage and not hinder the development of alternate sources of water, such as the recycled water projects. LADWP appreciates the opportunity to provide comments and looks forward to continue working with SWRCB staff in this process. Should you have any questions regarding this letter, please contact me at (213) 367-0436 or Ms. Chloé Grison at (213) 367-1339.

Sincerely,

Katherine Rubin
Manager of Wastewater Quality and Compliance

CG
Enclosures
c/enc: Ms. Felicia Marcus, Chair, SWRCB
Mr. Steven Moore, Vice Chair, SWRCB
Ms. Tam M. Doduc, SWRCB
Ms. Dorene D'Adamo, SWRCB
Mr. E. Joaquin Esquivel, SWRCB
Ms. Chloé Grison, LADWP

Enclosure 1

Article on PFOA and PFOS in Water Reuse

ResearchGate

See discussions, stats, and author profiles for this publication at: https://www.researchgate.net/publication/5308787

Perfluorochemicals in Water Reuse

Article *in* Chemosphere · May 2008

DOI: 10.1016/j.chemosphere.2008.04.057 · Source: PubMed

CITATIONS
67

READS
192

3 authors, including:

Megan H Plumlee
Orange County Water District, Fountain Valley, United States
30 PUBLICATIONS **703** CITATIONS

SEE PROFILE

Martin Reinhard
Stanford University
224 PUBLICATIONS **10,091** CITATIONS

SEE PROFILE

Some of the authors of this publication are also working on these related projects:

Project Membrane fouling mitigation View project

Project NSF ERC View project

All content following this page was uploaded by Megan H Plumlee on 16 March 2018.

The user has requested enhancement of the downloaded file.

Chemosphere 72 (2008) 1541–1547

Contents lists available at ScienceDirect

Chemosphere

journal homepage: www.elsevier.com/locate/chemosphere

Perfluorochemicals in water reuse

Megan H. Plumlee [a], Jeannine Larabee [b], Martin Reinhard [a,*]

[a] Department of Civil and Environmental Engineering, Yang & Yamasaki Environment and Energy Building, 473 Via Ortega, Stanford University, Stanford, CA 94305, USA
[b] Santa Clara Valley Water District, 5750 Almaden Expressway, San Jose, CA 95118, USA

ARTICLE INFO

Article history:
Received 16 January 2008
Received in revised form 17 April 2008
Accepted 18 April 2008
Available online 10 June 2008

Keywords:
PFOS
PFOA
Reclaimed wastewater
Wetland
Toxicity

ABSTRACT

Faced with freshwater shortages, water authorities are increasingly utilizing wastewater reclamation to augment supplies. However, concerns over emerging trace contaminants that persist through wastewater treatment need to be addressed to evaluate potential risks. In the present study, perfluorinated surfactant residues were characterized in recycled water from four California wastewater treatment plants that employ tertiary treatment and one that treats primary sewage in a wetland constructed for both treatment and wildlife habitat. Effluent concentrations were compared with surface and groundwater from a creek where recycled water was evaluated as a potential means to augment flow (Upper Silver and Coyote Creeks, San Jose, CA). In the recycled water, 90–470 ng/l perfluorochemicals were detected, predominantly perfluorooctanoate (PFOA; 10–190 ng/l) and perfluorooctanesulfonate (PFOS; 20–190 ng/l). No significant removal of perfluorochemicals was observed in the wetland (total concentration ranged 100–170 ng/l across various treatment stages); in this case, 2-(*N*-ethylperfluorooctanesulfonamido) acetic acid (*N*-EtFOSAA), perfluorodecanesulfonate (PFDS), and PFOS were dominant. Though there is currently no wastewater discharge into the creeks, perfluorochemicals were found in the surface water and underlying groundwater at a total of 20–150 ng/l with PFOS and PFOA again making the largest contribution. With respect to ecotoxicological effects, perfluorochemical release via recycled water into sensitive ecosystems requires evaluation.

© 2008 Elsevier Ltd. All rights reserved.

1. Introduction

With ecosystems increasingly stressed by the shortage of freshwater, treated wastewater effluent is a promising water resource for the augmentation of water-starved environments. Historically, release of treated wastewater to surface water has been commonplace given the lack of alternatives. Water recycling, however, requires consideration of a complex set of benefits and risks at sites where a natural source (rain, groundwater, rivers) is replaced or augmented with tertiary effluent. Considerations include ecological effects and contamination of potable aquifers with potentially harmful organic contaminants.

Perfluorochemicals represent one such group of contaminants. They are used in a variety of materials such as food packaging, paints, and lubricants (Kissa, 1994) and have been detected in wastewater (Alzaga and Bayona, 2004; Boulanger et al., 2005; Schultz et al., 2006; Sinclair and Kannan, 2006; Loganathan et al., 2007), surface water (Hansen et al., 2002; Moody et al., 2002; Boulanger et al., 2004; Boulanger et al., 2005; Simcik and Dorweiler, 2005; Rostkowski et al., 2006; Sinclair et al., 2006; Skutlarek et al., 2006; McLachlan et al., 2007; So et al., 2007), groundwater (Moody et al., 2003; Schultz et al., 2004), drinking water (Harada et al., 2003; Skutlarek et al., 2006; Paustenbach et al., 2007), and rain (Loewen et al., 2005; Scott et al., 2006). Table 1 summarizes the aquatic occurrence of two commonly detected perfluorochemicals, perfluorooctanoate (PFOA) and perfluorooctanesulfonate (PFOS).

Laboratory studies demonstrate that mammals readily absorb PFOA and PFOS during oral and inhalation exposures. They tend to distribute to the blood serum and the liver and can cross the blood-brain and placental barriers (Lange et al., 2006). Although research shows that PFOA, perfluorononanoate (PFNA), and PFOS are not estrogenic (Maras et al., 2006), high doses of PFOA and PFOS lead to mortality while lower doses result in hepatotoxic, immunotoxic, neurotoxic, and behavioral effects (Lange et al., 2006). When present in a mixture, PFOS may enhance the toxicity of other compounds by increasing cell membrane permeability (Hu et al., 2003; Jernbro et al., 2007). Perfluorochemicals bioaccumulate and have been detected in biota around the world, including fish, seals, minks, albatross, bald eagles, polar bears, and humans (Giesy and Kannan, 2002; Schultz et al., 2003). Typical concentrations of PFOA and PFOS in the serum of non-occupationally exposed humans are 3–35 and 7–82 μg/l, respectively (Hansen et al., 2001; Kannan et al., 2004). These levels are concerning given that adverse effects have been observed in rats at levels (370 μg/l PFOA) which differ from humans by less than a safety factor of 100 (Butenhoff et al., 2004; Lange et al., 2006). Wildlife monitoring studies for high trophic levels report PFOS concentrations of 8–242 μg/l serum in ringed seals (Kannan et al., 2001a), 3–34 μg/l

* Corresponding author. Tel.: +1 650 723 0308; fax: +1 650 723 7058.
E-mail address: reinhard@stanford.edu (M. Reinhard).

0045-6535/$ - see front matter © 2008 Elsevier Ltd. All rights reserved.
doi:10.1016/j.chemosphere.2008.04.057

Table 1
Summary of perfluorochemical occurrence in wastewater, freshwater, and drinking water

Site and location	PFOA (ng/l)	PFOS (ng/l)	Other perfluorochemicals detected	Source of perfluorochemicals[a]	References
Wastewater effluent					
2 WWTPs (Catalonia, Spain)	<100–4300	n.m.	PFDA (50-8170)	Domestic and industrial influents	Alzaga and Bayona, 2004
WWTP (Iowa City, Iowa, USA)	22	26	*N*-EtFOSAA (3.6 ng/l)	Domestic influent (no known manufacturing or industrial perfluorochemical source)	Boulanger et al., 2005
10 WWTPs (USA)	3–97	1–130	PFBS, PFHxS, 6:2 FtS, PFHxA, PFNA, PFDA, FOSA	Domestic, industrial, and commercial influents	Schultz et al., 2006
6 WWTPs (New York, USA)	58–1050	3–68	PFHxS, PFNA, PFDA, PFUnDA, 8:2 FTCA, 8:2 FTUCA	Domestic, industrial, and commercial influents	Sinclair and Kannan, 2006
Reclaimed wastewater, 4 WWTPs (California, USA)	12–185	20–187	PFHxS, PFDS, PFHxA, PFHpA, PFNA, PFDA, 6:2 FtS, FOSA, *N*-EtFOSAA	Domestic, industrial, and commercial influents	present study, 2007
Surface water					
Tennessee river (Decatur, AL, USA) upstream and downstream of fluorochemical manufacturing facility	Upstream: <25; Downstream: <25–513	Upstream: 17-53; Downstream: 30–140	n.m.	Fluorochemical manufacturing facility	Hansen et al., 2002
Etobicoke Creek (Toronto, Ontario, Canada) upstream and downstream of fluorochemical spill over time	Upstream: n.d.-33; downstream: n.d.-10 600	Upstream: n.d.; downstream: n.d.-995 000	PFHxS	Accidental spill of aqueous film-forming foams (AFFFs)	Moody et al., 2002
Lake Erie and Lake Ontario (USA), urban and remote locations	27–50	21–70	*N*-EtFOSAA (4.2–11 ng/l), FOSA (0.6–1.3 ng/l), PFOSulfinate (n.d.-17 ng/l)	Not stated	Boulanger et al., 2004
River (Iowa City, Iowa, USA)	8.7	23	*N*-EtFOSAA (1.2 ng/l)	Wastewater effluent	Boulanger et al., 2005
"Remote" lakes (Lake Superior, Minnesota, USA; Voyageurs National Park lakes, Canada)	0.1–0.7	n.d.-1.2	PFHxA, PFHpA, PFNA	Atmospheric deposition	Simcik and Dorweiler, 2005
"Urban" waters (3 lakes in Minneapolis and Minnesota River in Minnesota, USA)	0.5–19	2.4–47	PFHxA, PFHpA, PFNA, PFDA	Urban location, runoff, and wastewater discharge	Simcik and Dorweiler, 2005
Lake Michigan (USA)	0.3–3.4	0.9–3.1	PFHpA	Non-atmospheric sources	Simcik and Dorweiler, 2005
Streams, lake in Shihwa and Banweol industrial areas, South Korea	0.9–62	2.2–651	PFBS, PFHxS, FOSA, PFHxA, PFHpA, PFDA	Local industrial sources	Rostkowski et al. (2006)
Surface waters of New York state, USA	<0.5–7.4	<0.8–756	PFHxS	Industrial and municipal wastewater effluent	Sinclair et al., 2006
Rhine river, Moehne river, and their tributaries (Germany)	2–48 (Rhine); 11–33 900 (Moehne)	2–26 (Rhine); 2–5900 (Moehne)	PFBS, PFBA, PFPnA, PFHxA, PFHpA	Superficial run-off from waste materials applied to agricultural areas upstream; wastewater discharge	Skutlarek et al., 2006
Tributaries of the Pearl and Yangtze Rivers (China)	0.85–260	<0.01–99	PFBS, PFHxS, FOSA, PFHxA, PFHpA, PFNA, PFDA, PFUnA	Industrial and municipal wastewater effluent	So et al., 2007
European rivers including Po, Rhine, Danube, Elbe, Oder, Seine, and Loire	200 (Po River) <0.65–23 (other rivers)	n.m.	PFHxA, PFHpA, PFNA	Fluoropolymer manufacturing facilities present in Po watershed; wastewater effluent is a likely source for the other rivers	McLachlan et al., 2007
Constructed wetland receiving reclaimed wastewater (California, USA)	9–14	19–29	PFHxS, PFDS, PFHxA, PFHpA, PFNA, PFDA, FOSA, *N*-EtFOSAA	Wastewater effluent	Present study, 2007
Upper Silver and Coyote Creeks (San Jose, CA, USA)	8–36	5–56	PFHxS, PFDS, PFHxA, PFHpA, PFDA, FOSA, *N*-EtFOSAA	Urban location, runoff, and atmospheric deposition	Present study, 2007
Groundwater					
Wurtsmith air force base (Michigan, USA)	8000–105 000	4000–110 000	PFHxS, PFHxA	Past fire-training exercises using AFFFs	Moody et al., 2003
Wurtsmith (Michigan, USA) and Tyndall (Florida, USA) Air Force Bases	3000–6 570 000	4000–2 300 000	4:2 FtS, 6:2 FtS, 8:2 FtS	Past fire-training exercises using AFFFs	Schultz et al., 2004
Monitoring wells near Upper Silver and Coyote Creeks (San Jose, CA, USA)	n.d.-18	19–87	PFHxS, PFDS, PFHxA, PFHpA, PFDA, FOSA, *N*-EtFOSAA	Infiltration from overlying urban stream, possibly other sources	Present study, 2007
Rainwater					
Winnipeg, Manitoba, Canada	n.d.	0.6	FTCAs, FTUCAs	Degradation from volatile fluorotelomer alcohols and other precursors	Loewen et al., 2005

Table 1 (*continued*)

Site and location	PFOA (ng/l)	PFOS (ng/l)	Other perfluorochemicals detected	Source of perfluorochemicals[a]	References
4 urban sites (2 USA, 2 Canada) and 5 rural/remote sites (2 USA, 3 Canada)	<0.1–89 (urban); <0.1–10 (rural)	n.m.	TFA, PFPrA, PFBA, PFPnA, PFHxA, PFHpA, PFNA, PFDA, PFUnA, PFDoA, FTCAs, FTUCAs	Degradation from volatile fluorotelomer alcohols	Scott et al., 2006
Drinking water					
Japan (four cities)	n.m.	0.1–51	n.m.	Sourced from Tama River	Harada et al., 2003
Ruhr area (Germany)	n.d.-519	n.d.-22	PFBS, PFBA, PFPnA, PFHxA, PFHpA	Sourced from rivers contaminated by land application of waste materials, see above	Skutlarek et al., 2006
Outside the Ruhr area (Germany), Paris (France), Hampshire (Great Britain)	n.d.-4 (outside Ruhr); n.d. (Paris, Hampshire)	n.d.-6 (outside Ruhr); n.d. (Paris, Hampshire)	PFPnA, PFHxA	Not stated	Skutlarek et al., 2006
West Virginia, USA measured over 1984–2004	58-4800	n.m.	n.m.	Sourced from groundwater contaminated by nearby Dupont facility	Paustenbach et al., 2007

[a] Known or suggested by authors of study.

blood in albatross (Kannan et al., 2001b), and 0.8–74 μg/l serum in red panda (Dai et al., 2006). Morikawa et al. (2006) report both the serum and aquatic concentrations of PFOS for turtles collected in a Japanese river, reporting 2–486 μg/l in the serum and 3–37 ng/l in the nearby water.

Because of the persistence of perfluorochemicals in wastewater treatment (Boulanger et al., 2005; Schultz et al., 2006; Sinclair and Kannan, 2006) and their expected bioaccumulation, the occurrence of these compounds must be considered in wastewater and wastewater reclamation, especially where humans or wildlife may be exposed. To this end, a range of perfluorochemicals (Fig. 1) were determined in recycled water and in two unique water recycling operations: a wetland constructed using wastewater for both treatment and habitat creation, and an urban stream evaluated for flow augmentation using recycled water. Results are interpreted based on literature evaluations of perfluorochemical toxicity.

2. Experimental

Reclaimed wastewater was collected in June 2007 from four California (USA) wastewater treatment plants (WWTP 1, 2, 3, and 4) that produce tertiary treated effluent for landscape irrigation and other reuse purposes. Grab samples were collected following tertiary treatment.

Water samples were also collected from a constructed wetland (California, USA) that receives primary treated wastewater

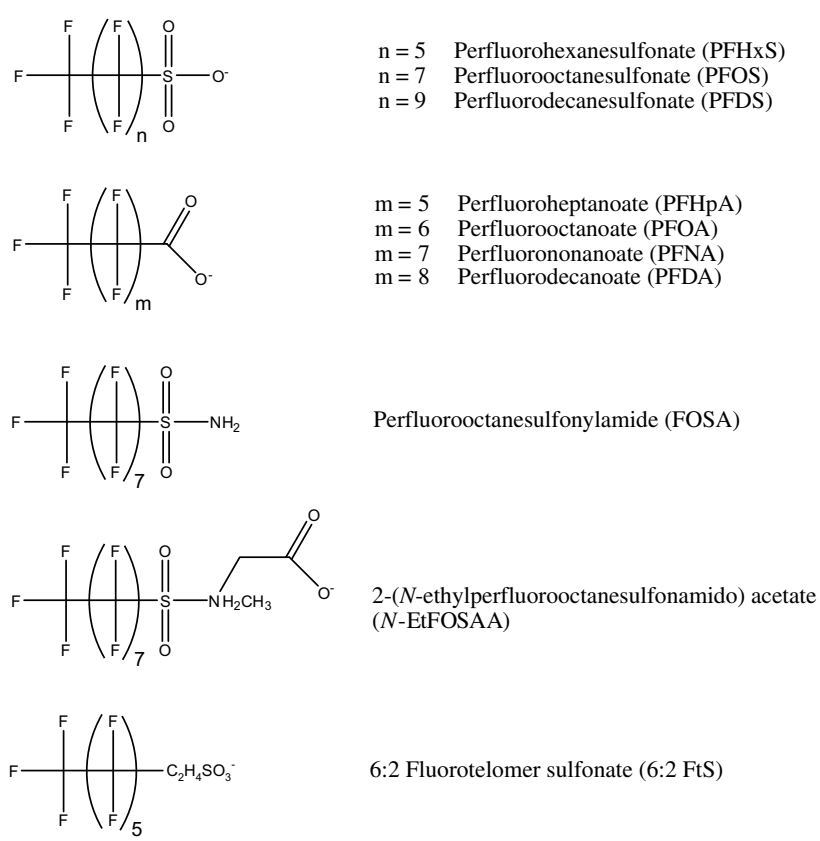

Fig. 1. Perfluorochemicals monitored in the present study.

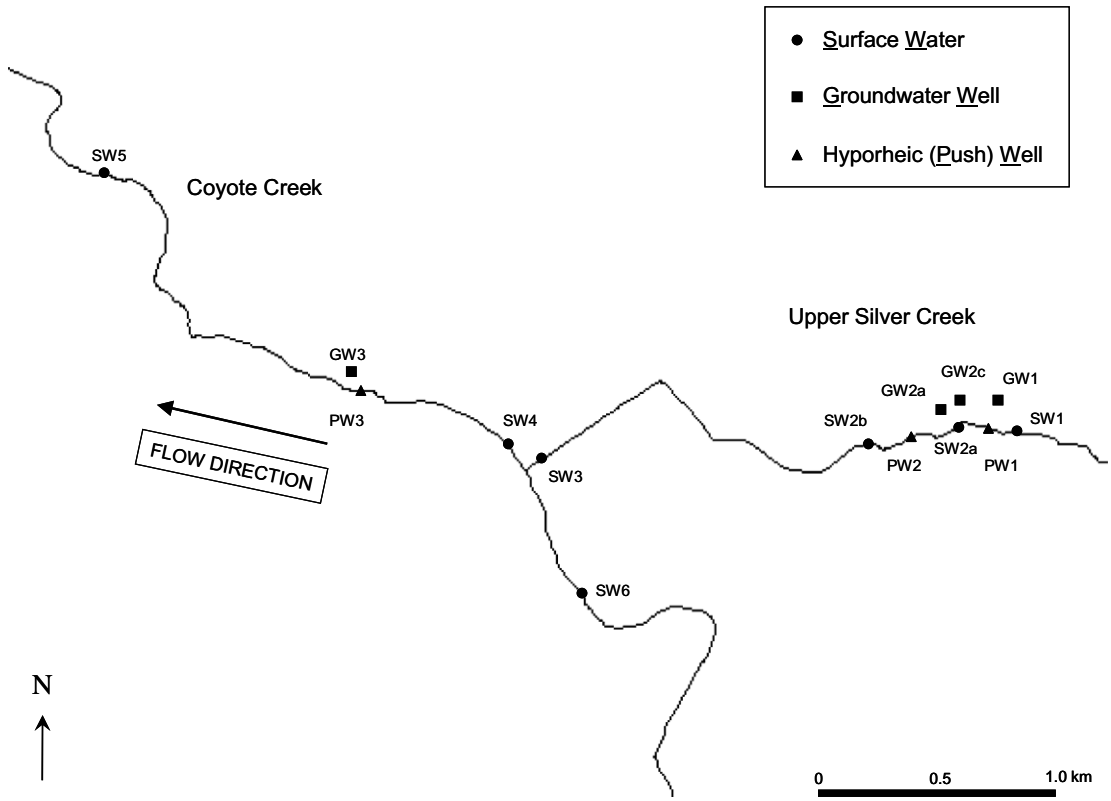

Fig. 2. Map of San Jose (CA) creek study reach, indicating surface water, groundwater, and hyporheic zone (push well) sampling sites. Creek flows northwest, eventually reaching the San Francisco Bay.

Table 2
Perfluorochemicals (ng/l) in reclaimed wastewater from four California treatment plants and in consecutive stages of a constructed wetland for wastewater treatment and wildlife habitat

Sample	PFHxS	PFOS	PFDS	PFHpA	PFOA	PFNA	PFDA	6:2 FtS	FOSA	*N*-EtFOSAA	Total PFCs
Reclaimed wastewater											
WWTP 1[a]	24	38	9.0	8.8	36	n.d. (<10)	11	11	2.8	11	150
WWTP 2[b]	17	190	n.d. (<2)	13	180	32	7.5	n.d. (<4)	3.2	23	470
WWTP 3[c]	6.5	20	n.d. (<2)	21	190	14	11	n.d. (<4)	4.8	5.5	270
WWTP 4[d]	8.0	42	3.3	5.6	12	n.d. (<10)	n.d.	n.d. (<4)	2.1	12	90
Constructed wetland using primary treated wastewater											
Oxidation pond influent	3.4	23	36	n.d. (<4)	14	9.1	3.4	n.d. (<4)	8.8	48	150
Oxidation pond effluent	3.2	21	23	n.d. (<4)	13	7.8	n.d. (<2)	n.d. (<4)	6.9	69	140
Treatment marsh effluent	3.0	25	29	n.d. (<4)	12	5.4	n.d. (<2)	n.d. (<4)	6.9	59	140
Enhancement marsh 1 influent	3.2	23	14	n.d. (<4)	11	3.3	n.d. (<2)	n.d. (<4)	5.3	40	100
Enhancement marsh 1 effluent	3.3	19	10	16	9.1	3.0	n.d. (<2)	n.d. (<4)	4.5	41	110
Enhancement marsh 3 effluent	3.2	29	36	n.d. (<4)	11	3.5	n.d. (<2)	n.d. (<4)	7.4	85	170

Values are the mean of duplicate samples (mean percent difference between duplicate samples was 21%).
[a] Tertiary treatment via dual media filtration and chlorination, followed by polymer treatment and repeated filtration for reclaimed wastewater.
[b] Tertiary treatment via dual media filtration and chloramination, followed by additional chloramination for reclaimed wastewater.
[c] Tertiary treatment via dual media filtration and chlorination.
[d] Tertiary treatment via fixed growth reactor (ammonia removal), flocculation, dual media filtration, and chlorination, followed by additional flocculation, dual media filtration, and chlorination for reclaimed wastewater.

(clarification and solids digestion) and discharges to the ocean. In addition to fulfilling treatment requirements for discharge, the wetland provides community recreation and wildlife habitat. Grab samples were taken in February 2006 from treatment stages including the oxidation ponds, treatment marshes, and enhancement marshes. Chlorination and dechlorination occur prior to the enhancement marshes. The hydraulic retention time of each stage varies from 1 to 2 months for the oxidation ponds, approximately 2 days for the treatment marshes, and nearly 10 days for the enhancement marshes.

In addition, grab samples of surface water were collected from several sites along Coyote Creek and a tributary, Upper Silver Creek, over a reach (Fig. 2) of approximately 5 km in San Jose, CA (USA) in May 2006 and June 2007. The Santa Clara Valley Water District (San Jose, CA, USA) was investigating the site for a potential flow augmentation with reclaimed wastewater; perfluorochemicals were evaluated in the creeks and reclaimed wastewater (from WWTP 2) to characterize baseline conditions. Nearby groundwater samples were obtained from four monitoring wells (GW1, 2a, 2c, and 3) installed to depths of 5–10 m. Depth-to-water ranged 2–5 m for the four wells. Very shallow "push" wells (PW1, 2, and 3) were also installed in or adjacent to the creek. The push wells were installed at a depth of just 0.6–0.9 m to capture young groundwater in the hyporheic zone, a region in which surface

and groundwater exchange and flow velocity, relative to the surface, is reduced by orders of magnitude (Hoehn and Cirpka, 2006). In order to use temperature as a tracer for hydraulic residence time (Anderson, 2005), temperature monitors were installed at selected surface water sites and in push wells. The results from this survey represent background, pre-augmentation conditions for the site.

Samples and blanks were analyzed by direct, large-volume injection using liquid chromatography-tandem mass spectrometry (Higgins et al., 2005; Schultz et al., 2006). Analytical details may be found in the supplementary information.

3. Results

3.1. Perfluorochemicals in four reclaimed wastewaters

Perfluorochemicals were measured in reclaimed wastewater from four California treatment plants. Following primary and secondary treatment, the reclaimed wastewaters were treated using the tertiary treatments listed in Table 2. Nearly all of the perfluorochemicals monitored were detected in all wastewaters (Table 2). As evidenced by the detections, perfluorochemicals persisted beyond the tertiary treatment steps. Summing the ten perfluorochemicals, the total concentration ranged from 90 to 470 ng/l across the effluents. PFOS and PFOA made the largest contributions to the total, at 7.6–46% and 13–68%, respectively. The perfluorochemical concentrations are consistent with reports for other municipal wastewaters (Table 1), which vary between plants (Alzaga and Bayona, 2004; Boulanger et al., 2005; Schultz et al., 2006; Sinclair and Kannan, 2006).

3.2. Perfluorochemicals in a constructed wetland receiving primary treated wastewater

Perfluorochemicals were also measured at various treatment stages of a constructed wetland sustained using wastewater. All ten perfluorochemicals were detected (Table 2), with the exception of 6:2 FtS, which was not detected at any stage. No significant removal of the perfluorochemicals was observed across wetland treatment. Although PFOA and PFOS are often found in the highest concentrations compared to other perfluorochemicals in wastewaters, in this case PFDS and 2-(*N*-ethylperfluorooctanesulfonamido) acetic acid (*N*-EtFOSAA) were found at greater concentrations. According to a recent study by Rhoads et al. (2008), higher concentrations of *N*-EtFOSAA rather than PFOS in wastewater effluent are expected given the biodegradation kinetics of 2-(*N*-ethylperfluorooctanesulfonamido) ethanol (*N*-EtFOSE), a precursor to *N*-EtFOSAA that is used in protective paper coatings. *N*-EtFOSAA then biodegrades to PFOS, but more slowly. Few monitoring studies include PFOS-precursors like *N*-EtFOSAA; Boulanger et al. detected 3.6±0.2 ng/l *N*-EtFOSAA in WWTP effluent compared to 26±2.0 ng/l PFOS (2005). Because PFOS and PFOA are directly discharged to treatment plants (Prevedouros et al., 2006), their concentrations in most wastewaters may exceed precursors.

3.3. Perfluorochemicals in an urban creek and groundwater

Perfluorochemicals were detected in an urban stream evaluated for flow augmentation using reclaimed wastewater, as well as in the underlying groundwater (Table 3). Upper Silver Creek sites (2007) showed a range of 126–145 ng/l total perfluorochemicals. This would increase to approximately 300 ng/l during augmentation with reclaimed wastewater (WWTP 2) given a flow regime of equal parts wastewater and surface flow.

The concentrations found downstream of the confluence of Upper Silver and Coyote Creeks are a result of mixing of the upstream contributions: downstream PFOS and PFOA levels are within 10–30% of those predicted using flow measurements (data not shown). The source of perfluorochemicals to these two creeks is unknown, but is likely to be a combination of atmospheric deposition of volatile precursors (Ellis et al., 2004; Simcik and Dorweiler, 2005; Martin et al., 2006) and surface runoff. There is currently no known upstream wastewater discharge into either creek. Results are consistent with the urban surface water sites characterized by Simcik and Dorweiler (2005), which ranged from 2–47 ng/l PFOS to 0.5–20 ng/l PFOA (compared to remote sites with n.d.-1.2 ng/l PFOS and n.d.-0.7 ng/l PFOA).

The concentrations detected in the hyporheic zone were typically consistent with the nearby creek water (Table 3), indicating that the hyporheic zone was supplied by the overlying creek and that negligible perfluorochemical attenuation occurred in the hyporheic zone. Analysis of temperature data for select sites indicated a hyporheic residence time of 15–60 min (Hoehn et al., 2007). No significant attenuation was expected in the hyporheic zone, nor with distance downstream, as the perfluorochemicals monitored resist biodegradation and sorption is limited (Giesy and Kannan, 2002; Prevedouros et al., 2006).

Groundwater wells near the creeks showed perfluorochemical detections in all samples and generally on the order of the creek concentrations. PFOS ranged 19–192 ng/l and PFOA n.d.-22 ng/l in the four groundwater wells monitored in 2006 and 2007. The source of perfluorochemicals to the groundwater is not entirely clear. Although head measurements indicate that the stream is a losing stream, the groundwater sampled is not necessarily recharged from the creek alone. For instance, urban rain (Table 1) may be a source of perfluorochemicals to the aquifer, or potentially septic systems located upstream. Additionally, a nearby golf course

Table 3
Range of perfluorochemical (ng/l) concentrations measured in an urban creek and groundwater in San Jose, CA during the dry months of 2006 and 2007

	PFHxS		PFOS		PFDS		PFHpA		PFOA		PFDA		FOSA		*N*-EtFOSAA	
	May-06	Jun-07	May-06	Jun-07	May-06	Jun-07	May-06	Jun-07	May-06	Jun-07	May-06	Jun-07	May-06	Jun-07	May-06	Jun-07
Detection limit	4	2	10	2	21	2	4	2	4	4	21	2	21	2	21	4
Upper silver creek surface water (sites 1, 2a, 2b, 3)[a]	n.d.	8.3–12	27–38	41–56	n.d.	3.1–36	n.d.	7.7–12	10–15	27–36	n.d.	11–19	n.d.	2.3–3.5	n.d.	n.d.-10
Coyote creek surface water (sites 4, 5, 6)	n.d.	2.3–3.8	9.3–20	4.8–25	n.d.-44	3.4–18	n.d.	n.d.-4.7	n.d.	8.0–13	n.d.	6.0–13	n.d.	n.d.-2.4	n.d.-31	n.d.-24
Hyporheic zone (3 wells)[b]	n.d.	3.8–10	44–58	25–48	n.d.	5.7–15	n.d.	7.3–8.1	10–23	22–28	n.d.	13–19	n.d.	2.9–4.3	n.d.	6.2–10
Groundwater (4 wells)	n.d.-11	4.0–17	31–192	19–87	n.d.	n.d.-3.3	n.d.	n.d.-4.8	n.d.-22	n.d.-18	n.d.	n.d.-10	n.d.	n.d.-3.7	n.d.-26	n.d.

PFNA and 6:2 FtS were also monitored but were not detected above detection limits of 4 and 10 ng/l in May 2006 and 10 and 4 ng/l in June 2007, respectively.
[a] Surface water site 2a was not monitored in May 2006.
[b] Hyporheic well 1 was not monitored in June 2007, hyporheic well 3 was not monitored in May 2006.

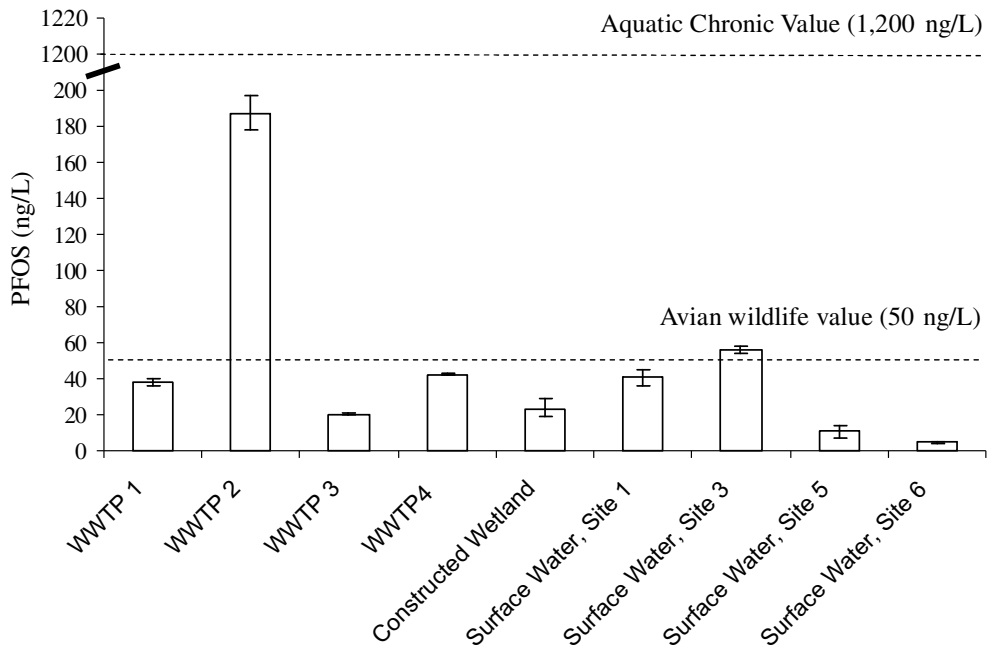

Fig. 3. Mean concentrations of PFOS in reclaimed wastewater (WWTP 1–4; June 2007, $n = 2$), a treatment and habitat wetland constructed using primary-treated wastewater (February 2006, mean of six treatment stages), and surface samples from an urban creek under consideration for stream flow augmentation with reclaimed wastewater (June 2007, $n = 2$). Error bars of mean values indicate the range. Threshold concentrations considered protective of aquatic and avian life are shown.

uses reclaimed wastewater for landscaping. Nevertheless, it is likely that the creek water is a significant source to the nearby groundwater given that the distribution and concentrations of the perfluorochemicals are consistent between surface and groundwater at the site. For example, perfluorohexanesulfonate (PFHxS), PFOS, PFDS, PFOA, and perfluorodecanoate (PFDA) were always or nearly always detected in the surface water, hyporheic zone, and groundwater (2007), whereas perfluoroheptanoate (PFHpA), perfluorooctane sulfonamide (FOSA), and *N*-EtFOSAA were detected only intermittently, and 6:2 FtS and PFNA were not present.

3.4. Implications of perfluorochemicals for water reuse

The potential contribution of water reuse projects to perfluorochemical exposure in humans will depend on the nature of the application and existing perfluorochemical background concentrations at the reuse site. No exposure to reclaimed wastewater is expected from drinking water given that in the US, recycled water is carried separately from potable water in clearly marked distribution systems.

Understanding the environmental risk requires analysis of perfluorochemical aquatic ecotoxicity at the ng/l-levels typically observed in reclaimed wastewater or at application sites. Perfluorochemical toxicity research is currently limited and must be extrapolated from laboratory organisms to complex ecosystems; however, suggested reference values provide some insight. Lowest observed effect concentrations (LOECs) for both acute and sub-chronic/chronic toxicity laboratory studies are greater than typical environmental concentrations (Lange et al., 2006), i.e. μg/l to mg/l-levels compared to ng/l-levels found in surface water, wastewater, and in water reuse sites characterized in the present study. A more conservative Tier II (potential risk) screening value of 1200 ng/l PFOS (aquatic chronic value) was determined by Beach et al. (2005) using EPA methodology by adjusting the lowest available LOEC, which is 70 times greater than the calculated aquatic chronic value. None of the reclaimed wastewaters or sites surveyed in this study exceed this screening value (Fig. 3).

For cases in which water recycling may expose organisms at upper trophic levels (i.e. wetland or stream flow enhancement), the fact that perfluorochemicals bioaccumulate in aquatic and terrestrial organisms (Giesy and Kannan, 2002; Schultz et al., 2003; Kannan et al., 2005) must be considered. The resulting tissue concentrations constitute an internal dose (Butenhoff et al., 2006), which may be more ecotoxicologically relevant than the aquatic perfluorochemical concentration. Taking into account bioaccumulation, Rostkowski et al. (2006) calculated a safe water concentration of 50 ng/l PFOS that is protective of trophic level IV avian species (avian wildlife value) that consume organisms in equilibrium with the water. Comparing this value to PFOS measured in the present study (Fig. 3), one of five reclaimed wastewaters (WWTP 2) and two of six urban creek sites (2b and 3) exceed this threshold. Assessment of the risk associated with recycled water projects is further complicated by the fact that perfluorochemicals are ubiquitous and thus are likely to be present at a site before application of reclaimed wastewater, as can be seen from the detections at the creek sites in the present study.

Compared to the global perfluorochemical burden from sources such as wastewater discharge and rain, water recycling plays only a limited role. Perfluorochemical occurrence is widespread and advanced wastewater treatment such as reverse osmosis or nanofiltration, while effective (Tang et al., 2006; Steinle-Darling and Reinhard, submitted for publication), may not be feasible for every situation. Furthermore, membrane technologies are nondestructive and typically produce brine that is released untreated. This brine is almost certain to contain perfluorochemicals at relatively high concentrations. Addressing the global perfluorochemical problem will require further research to predict the fate and toxicity of perfluorochemicals in the environment and an examination of source control.

Acknowledgements

Portions of this research were funded by the Santa Clara Valley Water District (SCVWD; California, USA), the California Department of Water Resources, the WateReuse Foundation, and the

National Science Foundation Graduate Research Fellowship program. We thank Alice Ringer and Sven Rosengreen (SCVWD), Eduard Hoehn (Eawag, Switzerland), Christopher P. Higgins, and Carlos Diaz. Any opinions, findings, conclusions, and recommendations expressed in this publication are those of the authors and do not necessarily reflect the views of the sponsoring agencies.

Appendix A. Supplementary material

Supplementary data associated with this article can be found, in the online version, at doi:10.1016/j.chemosphere.2008.04.057.

References

Alzaga, R., Bayona, J.M., 2004. Determination of perfluorocarboxylic acids in aqueous matrices by ion-pair solid-phase microextraction-in-port derivatization-gas chromatography-negative ion chemical ionization mass spectrometry. J. Chromatogr. A 1042, 155–162.

Anderson, M.P., 2005. Heat as a Ground Water Tracer. Ground Water 43, 951–968.

Beach, S.A., Newsted, J.L., Coady, K., Giesy, J.P., 2005. Ecotoxicological Evaluation of Perfluorooctanesulfonate (PFOS). Rev. Environ. Contam. Toxicol. 186, 133–174.

Boulanger, B., Vargo, J., Schnoor, J.L., Hornbuckle, K.C., 2004. Detection of perfluorooctane surfactants in great lakes water. Environ. Sci. Technol. 38, 4064–4070.

Boulanger, B., Vargo, J.D., Schnoor, J.L., Hornbuckle, K.C., 2005. Evaluation of perfluorooctane surfactants in a wastewater treatment system and in a commercial surface protection product. Environ. Sci. Technol. 39, 5524–5530.

Butenhoff, J.L., Kennedy Jr., G.L., Frame, S.R., O'Connor, J.C., York, R.G., 2004. The reproductive toxicology of ammonium perfluorooctanoate (APFO) in the rat. Toxicology 196, 95–116.

Butenhoff, J.L., Olsen, G.W., Pfahles-Hutchens, A., 2006. The applicability of biomonitoring data for perfluorooctanesulfonate to the environmental public health continuum. Environ. Health Perspect. 114, 1776–1782.

Dai, J., Li, M., Jin, Y., Saito, N., Xu, M., Wei, F., 2006. Perfluorooctanesulfonate and periluorooctanoate in red panda and giant panda from China. Environ. Sci. Technol. 40, 5647–5652.

Ellis, D.A., Martin, J.W., De Silva, A.O., Mabury, S.A., Hurley, M.D., Andersen, M.P.S., Wallington, T.J., 2004. Degradation of fluorotelomer alcohols: a likely atmospheric source of perfluorinated carboxylic acids. Environ. Sci. Technol. 38, 3316–3321.

Giesy, J.P., Kannan, K., 2002. Perfluorochemical surfactants in the environment. Environ. Sci. Technol. 36, 146A–152A.

Hansen, K.J., Clemen, L.A., Ellefson, M.E., Johnson, H.O., 2001. Compound-specific, quantitative characterization of organic fluorochemicals in biological matrices. Environ. Sci. Technol. 35, 766–770.

Hansen, K.J., Johnson, H.O., Eldridge, J.S., Butenhoff, J.L., Dick, L.A., 2002. Quantitative characterization of trace levels of PFOS and PFOA in the Tennessee River. Environ. Sci. Technol. 36, 1681–1685.

Harada, K., Saito, N., Sasaki, K., Inoue, K., Koizumi, A., 2003. Perfluorooctane sulfonate contamination of drinking water in the Tama River, Japan: estimated effects on resident serum levels. Bull. Environ. Contam. Toxicol. 71, 31–36.

Higgins, C.P., Field, J.A., Criddle, C.S., Luthy, R.G., 2005. Quantitative determination of perfluorochemicals in sediments and domestic sludge. Environ. Sci. Technol. 39, 3946–3956.

Hoehn, E., Cirpka, O.A., 2006. Assessing hyporheic zone dynamics in two alluvial flood plains of the Southern Alps using water temperature and tracers. Hydrol. Earth Syst. Sci. 10, 553–563.

Hoehn, E., Plumlee, M.H., Reinhard, M., 2007. Natural attenuation potential of downwelling streams for perfluorochemicals and other emerging contaminants. Water Sci. Technol. 56, 59–64.

Hu, W., Jones, P.D., DeCoen, W., King, L., Fraker, P., Newsted, J., Giesy, J.P., 2003. Alterations in cell membrane properties caused by perfluorinated compounds. Comp. Biochem. Physiol. C: Toxicol. Pharmacol 135, 77–88.

Jernbro, S., Rocha, P.S., Keiter, S., Skutlarek, D., Färber, H., Jones, P.D., Giesy, J.P., Hollert, H., Engwall, M., 2007. Perfluorooctane Sulfonate Increases the Genotoxicity of Cyclophosphamide in the Micronucleus Assay with V79 Cells: Further Proof of Alterations in Cell Membrane Properties Caused by PFOS. Environ. Sci. Pollut. Res. 14, 85–87.

Kannan, K., Corsolini, S., Falandysz, J., Fillmann, G., Kumar, K.S., Loganathan, B.G., Mohd, M.A., Olivero, J., Yang, J.H., Aldous, K.M., 2004. Perfluorooctanesulfonate and related fluorochemicals in human blood from several countries. Environ. Sci. Technol. 38, 4489–4495.

Kannan, K., Franson, J., Bowerman, W., Hansen, K., Jones, P., Giesy, J., 2001b. Perfluorooctane sulfonate in fish-eating water birds including bald eagles and albatrosses. Environ. Sci. Technol. 35, 3065–3070.

Kannan, K., Koistinen, J., Beckmen, K., Evans, T., Gorzelany, J.F., Hansen, K.J., Jones, P.D., Helle, E., Nyman, M., Giesy, J.P., 2001a. Accumulation of perfluorooctane sulfonate in marine mammals. Environ. Sci. Technol. 35, 1593–1598.

Kannan, K., Tao, L., Sinclair, E., Pastva, S.D., Jude, D.J., Giesy, J.P., 2005. Perfluorinated compounds in aquatic organisms at various trophic levels in a great lakes food chain. Arch. Environ. Contam. Toxicol. 48, 559–566.

Kissa, E. 1994. Fluorinated Surfactants: Synthesis, Properties, and Applications. Marcel Dekker, New York.

Lange, F.T., Schmidt, C., Brauch, H.-J. 2006. Perfluoroalkylcarboxylates and -sulfonates: emerging contaminants for drinking water supplies? Rhine Water Works, Association of River Waterworks, The Netherlands.

Loewen, M., Halldorson, T., Wang, F., Tomy, G., 2005. Fluorotelomer carboxylic acids and PFOS in rainwater from an urban center in Canada. Environ. Sci. Technol. 39, 2944–2951.

Loganathan, B.G., Sajwan, K.S., Sinclair, E., Kumar, K.S., Kannan, K., 2007. Perfluoroalkyl sulfonates and perfluorocarboxylates in two wastewater treatment facilities in Kentucky and Georgia. Water Res. 41, 4611–4620.

Maras, M., Vanparys, C., Muylle, F., Robbens, J., Berger, U., Barber, J.L., Blust, R., Coen, W.D., 2006. Estrogen-like properties of fluorotelomer alcohols as revealed by MCF-7 breast cancer cell proliferation. Environ. Health Perspect. 114, 100–105.

Martin, J.W., Ellis, D.A., Mabury, S.A., Hurley, M.D., Wallington, T.J., 2006. Atmospheric chemistry of perfluoroalkanesulfonamides: kinetic and product studies of the OH radical and Cl atom initiated oxidation of *N*-ethyl perfluorobutanesulfonamide. Environ. Sci. Technol. 40, 864–872.

McLachlan, M.S., Holmstrom, K.E., Reth, M., Berger, U., 2007. Riverine discharge of perfluorinated carboxylates from the European continent. Environ. Sci. Technol. 41, 7260–7265.

Moody, C.A., Hebert, G.N., Strauss, S.H., Field, J.A., 2003. Occurrence and persistence of perfluorooctanesulfonate and other perfluorinated surfactants in groundwater at a fire-training area at Wurtsmith Air Force Base, Michigan, USA. J. Environ. Monit. 5, 341–345.

Moody, C.A., Martin, J.W., Kwan, W.C., Muir, D.C.G., Mabury, S.A., 2002. Monitoring perfluorinated surfactants in biota and surface water samples following an accidental release of fire-fighting foam into Etobicoke creek. Environ. Sci. Technol. 36, 545–551.

Morikawa, A., Kamei, N., Harada, K., Inoue, K., Yoshinaga, T., Saito, N., Koizumi, A., 2006. The bioconcentration factor of perfluorooctane sulfonate is significantly larger than that of perfluorooctanoate in wild turtles (Trachemys scripta elegans and Chinemys reevesii): an Ai river ecological study in Japan. Ecotoxicol. Environ. Safe. 65, 14–21.

Paustenbach, D.J., Panko, J.M., Scott, P.K., Unice, K.M., 2007. A methodology for estimating human exposure to peruorooctanoic acid (PFOA): a retrospective exposure assessment of a community (1951–2003). J. Toxicol. Environ. Health A 70, 28–57.

Prevedouros, K., Cousins, I.T., Buck, R.C., Korzeniowski, S.H., 2006. Sources, fate and transport of perfluorocarboxylates. Environ. Sci. Technol. 40, 32–44.

Rhoads, K.R., Janssen, E.M.-L., Luthy, R.G., Criddle, C.S., 2008. Aerobic biotransformation and fate of *N*-ethyl perfluorooctane sulfonamidoethanol (*N*-EtFOSE) in activated sludge. Environ. Sci. Technol. 42, 2873–2878.

Rostkowski, P., Yamashita, N., So, I.M.K., Taniyasu, S., Lam, P.K.S., Falandysz, J., Lee, K.T., Kim, S.K., Khim, J.S., Im, S.H., Newsted, J.L., Jones, P.D., Kannan, K., Giesy, J.P., 2006. Perfluorinated compounds in streams of the Shihwa Industrial Zone and Lake Shihwa, South Korea. Environ. Toxicol. Chem. 25, 2374–2380.

Schultz, M.M., Barofsky, D.F., Field, J.A., 2003. Fluorinated alkyl surfactants. Environ. Eng. Sci. 20, 487–501.

Schultz, M.M., Barofsky, D.F., Field, J.A., 2004. Quantitative determination of fluorotelomer sulfonates in groundwater by LCMS/MS. Environ. Sci. Technol. 38, 1828–1835.

Schultz, M.M., Barofsky, D.F., Field, J.A., 2006. Quantitative determination of fluorinated alkyl substances by large-volume-injection liquid chromatography tandem mass spectrometry-characterization of municipal wastewaters. Environ. Sci. Technol. 40, 289–295.

Scott, B.F., Spencer, C., Mabury, S.A., Muir, D.C.G., 2006. Poly and perfluorinated carboxylates in North American precipitation. Environ. Sci. Technol. 40, 7167–7174.

Simcik, M.F., Dorweiler, K.J., 2005. Ratio of perfluorochemical concentrations as a tracer of atmospheric deposition to surface waters. Environ. Sci. Technol. 39, 8678–8683.

Sinclair, E., Kannan, K., 2006. Mass loading and fate of perfluoroalkyl surfactants in wastewater treatment plants. Environ. Sci. Technol. 40, 1408–1414.

Sinclair, E., Mayack, D.T., Roblee, K., Yamashita, N., Kannan, K., 2006. Occurrence of perfluoroalkyl surfactants in water, fish, and birds from New York State. Arch. Environ. Contam. Toxicol. 50, 398–410.

Skutlarek, D., Exner, M., Färber, H., 2006. Perfluorinated surfactants in surface and drinking waters. Environ. Sci. Pollut. Res. 13, 299–307.

So, M.K., Miyake, Y., Yeung, W.Y., Ho, Y.M., Taniyasu, S., Rostkowski, P., Yamashita, N., Zhou, B.S., Shi, X.J., Wang, J.X., Giesy, J.P., Yu, H., Lam, P.K.S., 2007. Perfluorinated compounds in the Pearl River and Yangtze River of China. Chemosphere 68, 2085–2095.

Steinle-Darling, E., Reinhard, M., 2008, in press. Nanofiltration for trace organic contaminant removal: structure, solution, and membrane fouling effects on the rejection of perfluorochemicals. Environ. Sci. Technol.

Tang, C.Y., Fu, Q.S., Robertson, A.P., Criddle, C.S., Leckie, J.O., 2006. Use of reverse osmosis membranes to remove perfluorooctane sulfonate (PFOS) from semiconductor wastewater. Environ. Sci. Technol. 40, 7343–7349.

View publication stats

Enclosure 2
EPA Presentation on PFAS

EPA Activities on Per- and Polyfluoroalkyl Substances (PFAS)

June 1, 2018

U.S. Environmental Protection Agency

Outline

- What are Per- and Polyfluoroalkyl Substances (PFAS)?
- How are PFAS used?
- What is EPA doing about it?

Per- and Polyfluoroalkyl Substances (PFAS)

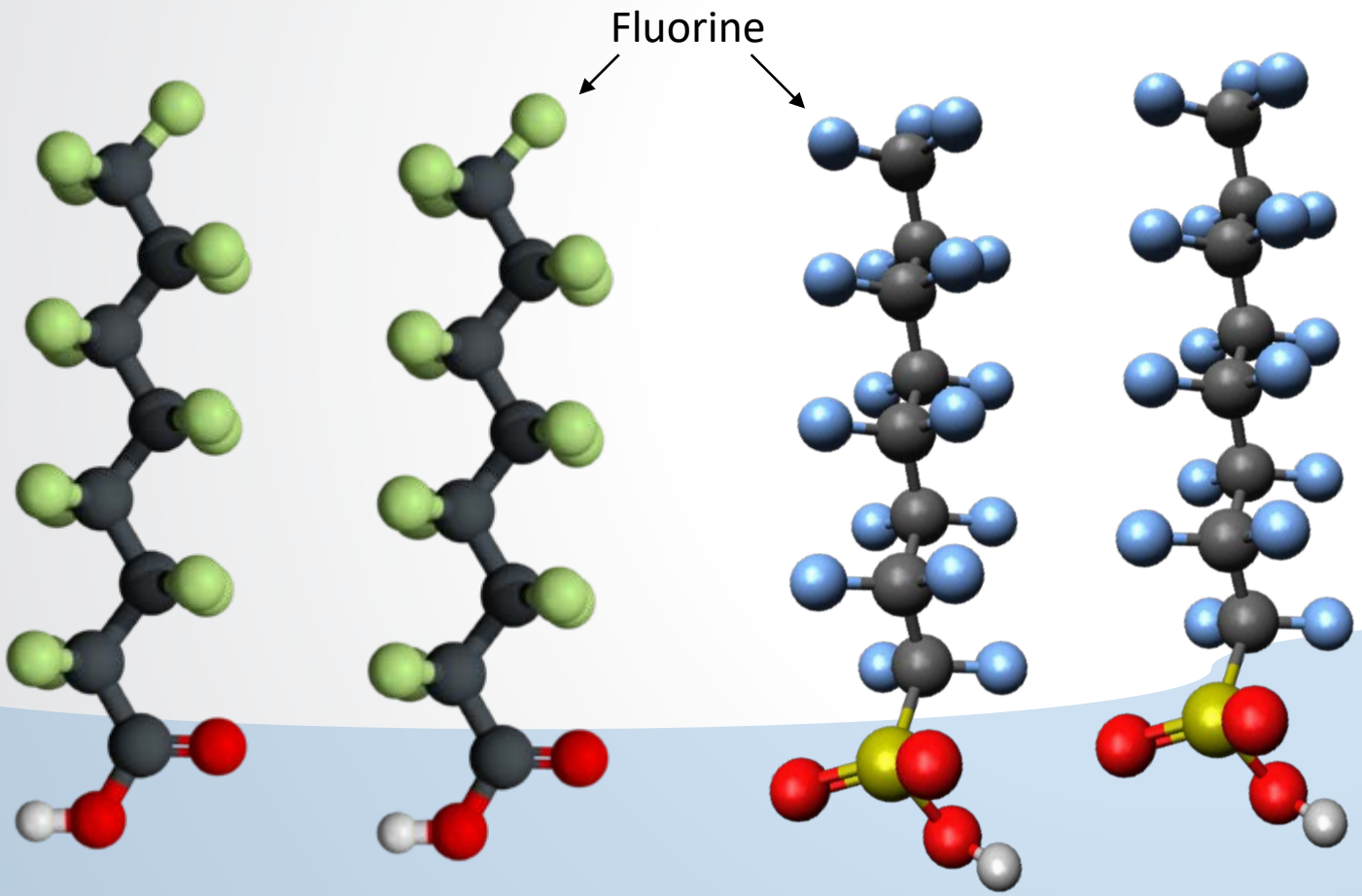

Perfluorooctanoic acid (PFOA)

Perfluorooctanesulfonic acid (PFOS)

- **A class of man-made chemicals**
  - Chains of carbon (C) atoms surrounded by fluorine (F) atoms
    - Water-repellent (hydrophobic)
    - Stable C-F bond
  - Some PFAS include oxygen, hydrogen, sulfur and/or nitrogen atoms, creating a polar end

Thousands of Chemicals: More Than Just PFOA and PFOS

PFAS

- **Non-polymers**
  - **Perfluoroalkyl acids (PFAAs)**
    $C_nF_{2n+1}R$
    - Perfluoroalkyl carboxylic acids (PFCAs)
    - Perfluoroalkane sulfonic acids (PFSAs)
    - Perfluoroalkyl phosphonic acids (PFPAs)
    - Perfluoroalkyl phosphinic acids (PFPIAs)
  - **Perfluoroalkane sulfonyl fluoride (PASF)** → **PASF-based derivatives**
    $C_nF_{2n+1}SO_2F$
    $C_nF_{2n+1}SO_2$-R, R = NH, $NHCH_2CH_2OH$, etc.
  - **Perfluoroalkyl iodides (PFAIs)** → **Fluorotelomer iodides (FTIs)** → **FT-based derivatives**
    $C_nF_{2n+1}I$
    $C_nF_{2n+1}CH_2CH_2I$
    $C_nF_{2n+1}CH_2CH_2$-R,
    R = NH, $NHCH_2CH_2OH$, etc.
  - **Per- and polyfluoroalkyl ethers (PFPEs)-based derivatives**
    - Polyfluoroalkyl ether carboxylic acids
- **Polymers**
  - **Fluoropolymers**
    - Polytetrafluoroethylene (PTFE)
    - Polyvinylidene fluoride (PVDF)
    - Fluorinated ethylene propylene (FEP)
    - Perfluoroalkoxyl polymer (PFA)
    - Others
  - **Side-chain fluorinated polymers**
    - Fluorinated (meth)acrylate polymers
    - Fluorinated urethane polymers
    - Fluorinated oxetane polymers
  - **Perfluoropolyethers**

Used in Homes, Businesses & Industry

- Food contact surfaces such as cookware, pizza boxes, fast food wrappers, popcorn bags, etc.
- Polishes, waxes, and paints
- Stain repellants for carpets, clothing, upholstered furniture, etc.
- Cleaning products
- Dust suppression for chrome plating
- Electronics manufacturing
- Oil and mining for enhanced recovery
- Performance chemicals such as hydraulic fluid, fuel additives, etc.

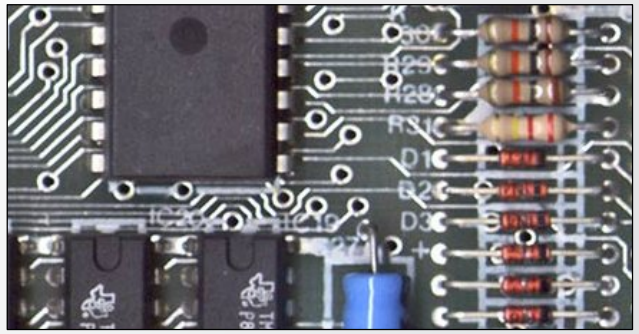

Sources of PFAS in the Environment

- Direct release of PFAS or PFAS products into the environment
  - Use of aqueous film forming foam (AFFF) in training and emergency response
  - Release from industrial facility
- Chrome plating and etching facilities
- Landfills and leachates from disposal of consumer and industrial products containing PFAS
- Wastewater treatment effluent and land application of biosolids

Reasons for Concern

- Known or suspected toxicity
- PFAS and/or breakdown products are persistent in the environment
- Persistence in biota vary greatly across PFASs and species
- Used by a variety of industries
- Found in a variety of consumer products
- Most people have been exposed to PFAS

EPA's Current PFAS Activities

- **Issues related to PFAS involve most EPA Programs and Regions**

- **Four broad goals:**
  - Fill data gaps related to human health toxicity to inform public concerns and risk mitigation
  - Establish validated methods for measuring many PFAS in different media
  - Reduce environmental exposures
  - Assure accurate and timely risk communications

EPA's PFAS Coordinating Committee

- **EPA announced cross-Agency effort to address PFAS in December 2017**
- **Focus on near-term actions to support states, tribes and local communities, including:**
  - Fill data gaps related to toxicity of additional PFAS compounds
  - Develop analytical methods to expand the capacity for analysis of PFAS compounds in drinking water and other contaminated media
  - Provide treatability information for PFAS compounds in contaminated media
  - Expand tools for proactive risk communication with communities impacted by PFAS compounds
- **EPA's Office of Water is leading these efforts**
  - Includes members from EPA's air, chemicals, land, water, enforcement, and research offices as well as EPA regions to enhance cooperation with partners at the state and local level

Current PFAS Activities in Water

- **Published Drinking Water Health Advisories (HA) in 2016 for PFOA and PFOS**
  - HAs are non-regulatory information for federal, state and local officials to consider when addressing drinking water contamination
  - Identified 0.07 µg/L (70 ppt) as the HA level for PFOA and PFOS combined and provided information about treatment and monitoring
- **Evaluating PFOA and PFOS for regulatory determination under the Safe Drinking Water Act (SDWA)**
  - PFOA and PFOS are on the fourth Contaminant Candidate List (CCL 4) published in November 2016. OW is assessing PFOA and PFOS against the three SDWA regulatory determination criteria
    - *May have an adverse effect on the health of persons*
    - *Is known to occur or there is a substantial likelihood that it will occur in public water systems with a frequency and at lev els of public health concern*
    - *In the sole judgment of the Administrator, regulating the contaminant presents a meaningful opportunity for health risk reductions for persons served by public water systems*
  - From 2013 to 2015, EPA collected nationally representative data on the occurrence of six PFAS in public water systems (including PFOA and PFOS)

Current PFAS Activities for Waste Sites

- **EPA Federal Facility Superfund Program**
  - Actively engaged PFAS activities at 58 Federal Facility NPL Sites
  - It is anticipated that this number will grow since there are known or suspected contaminations of PFAS at many of the 140 DoD Federal Facility NPL Sites
  - PFAS detections in groundwater range from non-detect (based on analytical method limitations) or slightly exceeding the Drinking Water Health Advisory of 70 ppt (PFOA and PFOS combined) to 2,000,000 ppt
  - Drinking water has been potentially impacted at 22 of these Federal Facility NPL sites
- **Office of Superfund Remediation and Technology Innovation (OSRTI)**
  - 29 known impacted non-Federal NPL sites
  - 100s of potential NPL sites (e.g., 100 metal plating sites, 300 landfills)
- **Regional Assistance**
  - OLEM offices hold site-specific consultations with EPA Regions on investigations of PFAS contamination
  - OSRTI/FFRRO provides ongoing technical assistance on PFAS issues and also coordinates with the Regions on their needs and priorities on PFAS issues
  - Develop cleanup recommendations for PFOA/PFOS contaminated groundwater

Current PFAS Activities in Chemical Use

- **PFOA Stewardship Program**
  - Eight companies participated in the program and successfully eliminated production of PFOA
  - Resulted in phase-out of PFOA and related PFAS, including potential PFOA precursors, by these companies by the end of 2015
- **EPA's New Chemicals Program**
  - Since 2000 have reviewed hundreds of pre-market alternatives for PFOA and related chemicals
  - Most were approved with restrictions and data-generation requirements
- **Significant New Use Rule (SNUR)**
  - Proposed on January 21, 2015, to require manufacturers, importers, and processors of PFOA and related chemicals (including as part of articles), to notify EPA at least 90 days before starting or resuming new uses of these chemicals in any products
  - Notification provides EPA opportunity to conduct risk assessment/management for the new use
- **Gen X**
  - Determining the need to revise the GenX risk assessment originally done for its pre-market approval, based on data received by the company and other information arising from the NC situation

Current PFAS Research Activities

- **Human Health/Toxicity**
  - Understand human health toxicity
  - Inform risk mitigation activities
  - Chemical library and high throughput toxicity testing

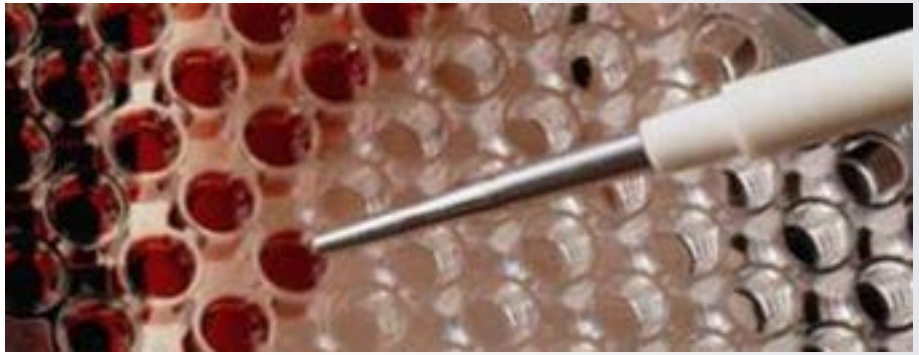

- **Analytical Methods**
  - Establish validated methods for measuring PFAS in different environmental media

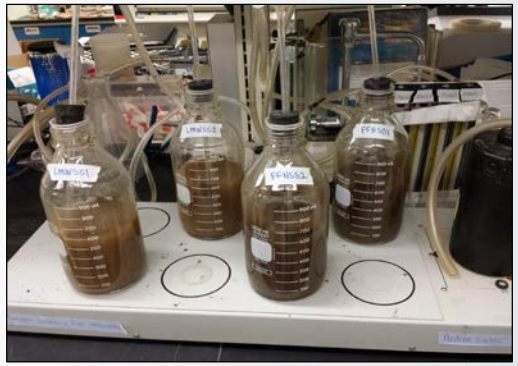

- **Site Characterization/Exposure**
  - Develop sampling methods to characterize sources and contaminated sites
  - Identify and estimate human exposure to PFAS from different sources

- **Treatment/Remediation**
  - Identify/evaluate methods to reduce PFAS exposures
  - Identify/evaluate methods to treat and remediate drinking water and contaminated sites

Research: Human Health/Toxicity

- **Problem**: Lack of toxicity data for many PFAS compounds
- **Action**:
  - Literature review of published toxicity data for 31 PFAS of interest to EPA
  - Build PFAS chemicals standards repository for testing
  - Conduct additional assessments and work to address knowledge gaps through computational toxicology and rapid/high-throughput screening
- **Results**:
  - Literature review complete, ~21 PFAS with some in vivo data to support assessment
  - Standards repository in place (approaching 300 PFAS chemicals)
  - Toxicity assessment underway for GenX and PFBS
  - Potential additional PFAS toxicity assessments
  - Tier 1 computational assays underway for 75 PFAS representative of PFAS chemical space
- **Impact**: Provide timely results useful for risk communication and management decisions at affected sites

Research: Analytical Methods

- **Problem**: Lack of standardized/validated analytical methods for many PFAS analytes (especially short chain), and in media other than drinking water
- **Action**: Perform multi-laboratory validations for analytical methods for (1) non-drinking water samples and solids (SW-846 Methods for facility or site investigation and remediation), (2) additional PFAS analytes for drinking water samples, and (3) methods for sampling air stack emissions
- **Results**:
  - Draft SW-846 Direct Injection analytical method external validation study underway
  - Draft SW-846 Method for Isotope Dilution procedure for non-drinking waters and solids in review. This method will address Department of Defense (DoD) analytical requirements for PFAS
  - EPA Method 537 work to include GenX
  - Draft SW-846 Method for solids in review
  - Method development for short-chained PFECAs (GenX, ADONA) in drinking water underway
  - Pilot test of air emission sampling methods underway in NH and NC
- **Impact**: Provide standardized analytical guidance for meeting a variety of site investigation and remediation needs

Research: Site Characterization/Exposure

- **Problem**: Knowledge gaps on sources and exposure and site-specific concentrations of PFAS compounds
- **Action**: Develop methods for sampling and analysis to characterize PFAS contaminants
- **Results**:
  - Develop non-targeted analysis (NTA) methods for qualitatively/semi-quantitatively assessing the types of PFAS (including PFAS precursors) in environmental samples
  - Develop sampling and analytical methods to characterize contaminated sites (chemical production facilities, chrome plating/etching, AFFF sites, wastewater, landfills, etc.)
  - Develop exposure models for identifying pathways for PFAS to human and ecological receptors
- **Impact**: Provide stakeholders with new methods to assess site contamination and potential exposure to PFAS

Research: Treatment/Remediation

- **Problem**: PFAS contamination of soil, groundwater, and drinking water contamination
- **Action**: Conduct research on treatment technologies and processes for managing PFAS in air, soil, groundwater, and drinking water
- **Results**:
  - Bench-, pilot- and full-scale research on activated carbon and ion exchange technologies for the removal of PFAS from drinking water and groundwater
  - Update EPA's Drinking Water Treatability Database to expand to PFAS other than PFOA/PFOS and include cost models for treatment technologies
  - Evaluating technologies for developing treatment trains to manage the risk of PFAS and associated co-contaminants in collaboration with DoD, WRF, industry, and academia
- **Impact**: Improved treatment strategies for removing PFAS from drinking water and manage PFAS sources

External Research Coordination and Collaboration

- **Collaboration with States and Tribes**
  - Engaging Environmental Council of States (ECOS) on multiple fronts, sharing briefings and sharing information about toxicity value development
  - Exchanging information with the Environmental Research Institute of States (ERIS) and the Interstate Technology and Regulatory Council (ITRC)
- **Collaboration with federal partners**
  - Co lead (with DoD and NIEHS) of recent Federal Information Exchange meeting on PFAS R&D
  - Collaborating in human health effects R&D with NIEHS/NTP
  - Coordinating with ATSDR on toxicity value development under an existing MOU
  - Engaging with multiple federal stakeholders (DoD, NASA, USDA, FDA, others) on toxicity value determination
  - Actively participating in DoD funded research focused on treatment and remediation

PFAS Activities with State Partners

EPA-ECOS-ASTHO Memorandum of Agreement

Communicating the Risks of PFAS: State Case Studies and Toolkits

US EPA ORD is funding a project with the **Environmental Council of States** (ECOS) and the **Association of State and Territorial Health Officials** (ASTHO). ECOS and ASTHO are compiling case studies as fact sheets, consisting of interviews and findings, with the goal to better understand how these state agencies manage their PFAS risk communication to the public.

- **Expected Outputs:**
  - Report on existing risk communication toolkits
  - ECOS states for PFAS state case studies (PA, MI and NH); ASTHO states (CO, MN and NY)
  - Webinar showcasing PFAS state case studies and risk communication strategies (June 2018)
- **Expected Outcomes:**
  - Improve public health, due to a greater awareness of PFAS risks
  - Build diverse public health and environmental partnerships with states and their communities
  - Increase understanding of state practices and experiences around PFAS risk communication strategies

EPA's PFAS National Leadership Summit

- **Included representatives from over 40 states, tribes, and territories; 20 federal agencies; congressional staff; associations; industry groups; and non-governmental organizations.**
- **EPA provided the opportunity for the public to join in a portion of the meeting via streaming online and is asking the public to send written input to EPA**
  - visit https://www.regulations.gov/ enter docket number: OW-2018-0270
- **During EPA's PFAS National Leadership Summit, participants worked together to:**
  - Share information on ongoing efforts to identify PFAS in communities and characterize risks from PFAS
  - Identify specific near-term actions, beyond those already underway, that are needed to address challenges currently facing states and local communities
  - Develop risk communication strategies that will help communities to address public concerns with PFAS

EPA's PFAS Summit/Engagement

- **Administrator Pruitt announced four actions EPA will take following the summit:**
  - EPA will initiate steps to evaluate the need for a maximum contaminant level (MCL) for PFOA and PFOS.
  - EPA is beginning the necessary steps to propose designating PFOA and PFOS as "hazardous substances" through one of the available statutory mechanisms, including potentially CERCLA Section 102.
  - EPA is currently developing groundwater cleanup recommendations for PFOA and PFOS at contaminated sites and will complete this task by fall of this year.
  - EPA is taking action in close collaboration with our federal and state partners to develop toxicity values for GenX and PFBS by this summer.
- **EPA's Community Engagement**
  - Following the summit, EPA will travel to states with communities impacted by PFAS to further engage on ways the agency can best support work occurring at state, local and tribal levels
- **EPA plans to develop a PFAS Management Plan using information gained from the Summit, community engagements and information provided by the public.**

Contacts

Andrew Gillespie, Ph. D.
Associate Director, US EPA/ORD/NERL
Office of Research and Development Executive Lead for PFAS R&D
Gillespie.Andrew@epa.gov

Eric Burneson, P.E.
Director of Standards and Risk Management
Office of Ground Water and Drinking Water
Burneson.Eric@epa.gov

Enclosure 3

Pease Treatment Cost Alternative Report

Weston & Sampson

westonandsampson.com

5 Centennial Drive
Peabody, MA 01960 (HQ)
tel: 978.532.1900

REPORT

June 2017

CITY OF
Portsmouth
NEW HAMPSHIRE

Pease Treatment Cost Alternative Report

TABLE OF CONTENTS

Page

EXECUTIVE SUMMARY ES-1

TABLE OF CONTENTS i

LIST OF FIGURES ii

LIST OF TABLES iii

LIST OF APPENDICES iv

1.0 GENERAL 1-1
1.1 Existing System 1-1
1.2 Background and Work to Date 1-1
1.3 Proposed Project 1-2

2.0 DESIGN CRITERIA 2-1
2.1 Water Supply 2-1
2.2 Demonstration Study Results 2-2
2.3 Finished Water 2-3
2.4 Analogous System Research 2-4

3.0 TREATMENT FACILITY DESCRIPTION 3-1
3.1 Design Criteria 3-1
3.2 Sequence of Construction 3-1
3.2.1 Retrofitting Existing Building 3-1
3.2.2 New Building 3-5
3.3 Carbon Life Projection 3-5

4.0 ESTIMATED PROJECT COSTS 4-1
4.1 Cost Estimate 4-1
4.1.1 Capital Costs 4-1
4.1.2 Annual Costs 4-1
4.1.3 Present Worth Comparison 4-1

LIST OF FIGURES

Figure 1-1 ..... Current Process Flow Schematic

Figure 2-1 ..... Suffolk County Column Test

Figure 3-1 ..... Proposed Process Flow Schematic

Figure 3-2 ..... Retrofit Building Layout

Figure 3-3 ..... Building Retrofit Site Plan

Figure 3-4 ..... New Building Layout

Figure 3-5 ..... New Building Site Plan

LIST OF TABLES

Table 2-1 ..... Well Water Supply Summary

Table 2-2 ..... Raw Water Quality Characteristics

Table 2-3 ..... Finished Water Quality Requirements

Table 2-4 ..... Drinking Water Utilities Contacted for Information

Table 4-1 ..... Present Worth Comparison of Design Options

LIST OF APPENDICES

Appendix A..... Demonstration Study Results

Appendix B ..... Analogous System Data

Appendix C ..... Detailed Cost Estimate

EXECUTIVE SUMMARY

The presence of Per- and Polyfluoroalkyl Substances (PFASs) compounds detected initially in the Haven Well in May of 2014, dictate the need for treatment of three valuable groundwater sources serving the Pease Tradeport Water System. Following the detection of PFASs and the subsequent shut down of this well, testing at the Harrison and Smith Wells indicated total PFAS was present. An initial feasibility study for treatment technologies in the fall of 2015 indicated that granular activated carbon filtration (GAC) was a viable method for removal of PFASs for potable drinking water. In September of 2016, a demonstration study consisting of two 20,000 lb GAC filter vessels was put online to treat the Harrison and Smith Wells. Since the implementation of the demonstration study, over 51 million gallons of water has been treated to non-detect levels of PFOS and PFOA. Valuable information has been learned from this study as well as from surveying other drinking water utilities that are treating to remove PFASs. This information was used to develop design criteria for an appropriate treatment process to treat the combined water flows from Haven, Harrison, and Smith Wells and to evaluate the merits of retrofitting the existing water treatment plant on Grafton Road or constructing a new facility on an adjacent lot.

1.0 GENERAL

1.1 Existing System

The Pease International Tradeport is home to commercial and industrial developments with over 250 companies and is continuing to grow. The near 10,000 employees in this area create a significant daytime water demand. The Tradeport and some abutting residential areas in Newington represent the Pease Pressure Zone. Average day demand (ADD) and maximum day demand (MDD) for the Pease Pressure Zone system for 2016 were 0.64 million gallons and 1.28 million gallons, respectively. The projected MDD for the Tradeport at maximum buildout was estimated by Underwood Engineers (Pease Wastewater Treatment Facility Evaluation, January 2014) to be 1.578 million gallons. The 0.6 million gallon Hobbs Hill Tank, with an overflow elevation of 230 feet, is used as the hydraulic tank in the Pease Pressure Zone. This tank combines with the Air National Guard Tank for a total storage capacity of 1.0 million gallons.

The City of Portsmouth's Harrison, Smith, and Haven municipal wells have historically provided drinking water to the Pease Tradeport system. In addition, portions of Newington were connected to the Tradeport in 2014. The Tradeport supply is supplemented through the Pease booster pumps which are connected to the City of Portsmouth's main pressure zone. All of these sources are piped through the Pease WTP located on Grafton Road. The water is currently treated at the Pease WTP with chlorine, fluoride, and an orthophosphate/polyphosphate blend for corrosion control.

1.2 Background and Work to Date

The Pease WTP was originally designed in the early 1980s for the treatment of Volatile Organic Compounds (VOC's). The total hydraulic capacity of the system was estimated to be between 1,200 and 1,500 gpm. Little is known about the design parameters regarding carbon usage rates or empty bed contact times. Aeration and vapor phase carbon were added as pretreatment processes after the plant's original construction. An extension of the east end of the facility housed the aeration units and an associated clearwell. These facilities were constructed as part of the Haven Well contingency plan for potential VOC contamination removal. A monitoring program managed by the Air Force tracked VOCs and dictated whether or not the system had to be activated. That level never triggered the need to turn the facility on.

The Haven Well is the largest producer of the three wells and an original public drinking water source for the City of Portsmouth that dates back to 1875. Following extensive testing in 2002, NHDES approved the Haven Well for use at 250 gpm and later allowed an increase up to 700 gpm. The treatment plant process equipment however, remained unused and was deemed unusable and subsequently demolished. Since 2002, the Pease Tradeport demand was satisfied using Haven, Smith, and Harrison Wells with the Portsmouth system booster pumps available as emergency supply. Following the detection of PFAS, the Haven Well was hydraulically disconnected from the Tradeport at the Pease WTP. The booster pumps were then utilized to replace the lost Haven Well capacity. This balancing of sources allowed Pease to be supplied with 50% of its water coming from the City system and 50% provided by the Harrison and Smith Wells. The current treatment process schematic is shown in Figure 1-1. The subsequent need to identify, design, and construct appropriate treatment for the

water quality concerns is described in the next subsection. Specific design criteria are described in Section 2.0 of this report, while infrastructure components are provided in Section 3.0; associated costs are described in Section 4.0.

1.3 Proposed Project

The treatment for the combined three well sources, the Pease WTP and the booster pump operation is considered to be "the Project". The upgrades associated with the Project are necessary to reduce PFASs levels to below the health advisory limit currently set at 0.07 μg/L combined PFOA/PFOS.

The regulating force behind this project is driven by the discovery of PFASs in the well water which are on the Environmental Protection Agency's (EPA) Contaminant Candidate List (CCL). The EPA originally established preliminary health advisory (pHA) limits for two specific PFASs, perfluorooctanesulfonic acid (PFOS) and perfluorooctanoic acid (PFOA). Long term limits were set as a current health advisory level (HA) for PFOA and PFOS in May 2016. In addition, four other PFASs were monitored under EPA's Third Unregulated Contaminant Monitoring Rule (UCMR 3). These include: perfluorononanoic acid (PFNA), perfluorohexanesulfonic acid (PFHxS), perfluoroheptanoic acid (PFHpA), and perfluorobutanesulfonic acid (PFBS). A list of 23 different PFASs that have been monitored by the Air Force at the Harrison and Smith Wells is shown in Appendix A.

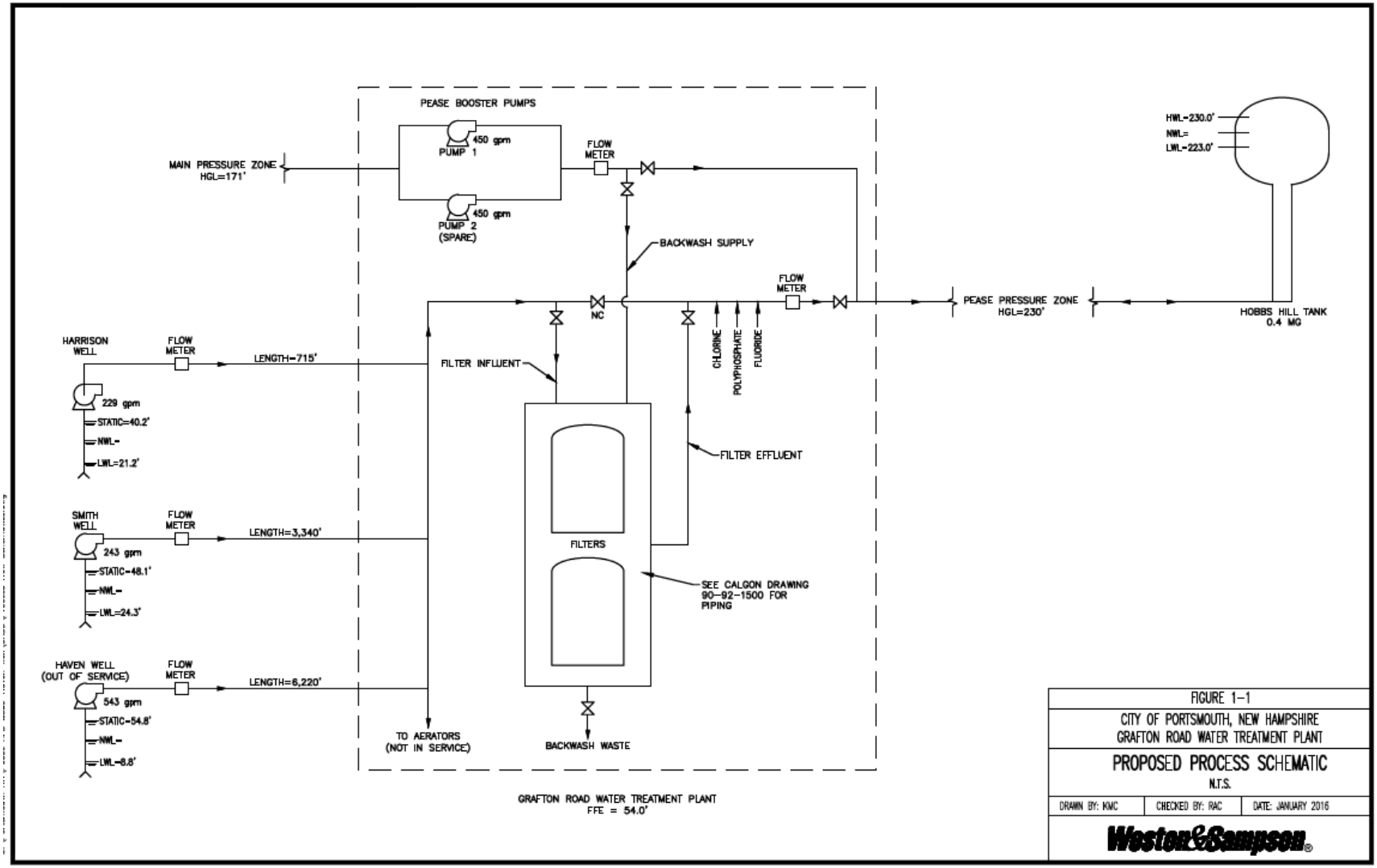

Figure 1-1 – Current Temporary Treatment Process Flow Schematic

2.0 DESIGN CRITERIA

2.1 Water Supply

The City of Portsmouth maintains three wells that discharge to the water system that supplies the Pease International Tradeport (Pease Pressure Zone). The Pease pressure zone also uses supplemental water from the City's Main Pressure Zone through the Pease booster pumps located at the Pease WTP as necessary. The Pease water supply well capacities are presented in Table 2-1.

Table 2-1 – Well Water Supply Summary

Well	Design Capacity
Harrison Well (gpm)	286
Smith Well (gpm)	343
Haven Well (gpm)	534
Total Flow (gpm)	1,163

The proposed design capacity of the WTP was estimated with consideration for the safe yield of the wells and the actual pumping capacity of the wells and pumps. The Harrison and Smith wells have potential capacities in excess of the safe yield. These capacities allow operators to pump the wells less than 24-hours a day at higher rates to meet variable system demands and remain within the safe yield volumes. The planned WTP design capacity is 125% of the safe yield of Harrison well and at the existing pump capacity of the Smith well. Given the groundwater treatment scheme presented for the Haven well by the Air Force, it currently will not be possible to peak the Haven well above its safe yield, therefore the WTP design capacity is the same as the safe yield for that well.

It is recommended that the Pease Booster Pumps be upgraded to provide emergency redundancy to the well water capacity of the WTP and be sized to supply water to the Pease Pressure Zone. The estimated maximum flow rate of these pumps would be equivalent to the current maximum day demand of 1.2 MGD plus 25%, or 1,040 gpm.

PFASs were found in Harrison, Haven, and Smith Wells, with the Haven Well containing significantly higher levels of PFAS than the other two wells. The sample results of 14 PFASs, approved for analysis under EPA Test Method 537 Rev. 1.1, is summarized in Table 2-2.

From 2014 through 2016, background water quality data was collected and compiled to more accurately estimate the life of the carbon filtration media. In particular, the presence of organic material in the raw water may compete for adsorption sites in the carbon media bed and may reduce the longevity of the carbon. Iron and manganese may impact carbon life by blinding the carbon media. Using aeration for the removal of any potential VOCs that may be present will extend the life of the carbon, as well as to strip any radon from the water is recommended. Tetrachloroethylene (PCE) has been identified in monitoring wells near the Haven Well and an estimated value of PCE will be used to size the aeration towers. Although VOCs have not been detected at the Harrison and Smith Wells, radon is present in the wells. These select water quality parameters are also listed in Table 2-2.

Table 2-2 – Raw Water Quality Characteristics

Parameter	Blended Water*	Haven Well
Sampling Period	9/2016-3/2017	PFAS: 4/2014-5/2014 Non-PFAS: 11/2016
NEtFOSAA (µg/L)	ND	-
NMEFOSAA (µg/L)	ND	-
PFBS (µg/L)**	0.024	0.051
PFDA (µg/L)	ND	0.004
PFDoA (µg/L)	ND	ND
PFHpA (µg/L)**	0.055	0.120
PFHxS (µg/L)	0.423	0.900
PFHxA (µg/L)**	0.158	0.340
PFNA (µg/L)	0.008	0.017
PFOS (µg/L)***	1.134	2.45
PFOA (µg/L)***	0.155	0.335
PFTA (µg/L)	ND	-
PFTrDA (µg/L)	ND	-
PFUnA (µg/L)	ND	ND
Radon (pCi/L)	1036	1203
pH	7.5	7.4
Iron (mg/L)	0.11	0.15
Manganese (mg/L)	0.14	0.31
Total Organic Carbon (mg/L)	0.40	0.40
PCE (µg/L)	4.59	10

*Blended water ratio: 24.6% Harrison Well, 29.5% Smith Well, 45.9% Haven Well
**Designates "short chain" compounds
***MCL for combined PFOA and PFOS is 0.07 µg/L

2.2 Demonstration Study Results

Treatment effectiveness is shown through the water quality sampling taken throughout the demonstration study. Results from the demonstration study to date show seven months of operation without identifiable breakthrough at the 25% sampling port. This period of operation corresponds to

approximately 10,000 bed volumes and approximately 51.5 million gallons of water treated. Occasional "J" values have been detected at various locations within the treatment system. These values are results between the method detection limit and the reporting limit and should not be considered quantifiably accurate. No trend has been identified with these J value results. All PFASs results are reported in Appendix A.

The demonstration study has shown that GAC works well for treating the PFAS concentrations in the Harrison and Smith wells. Information gleaned from the demonstration study include the necessity of having the ability to filter to waste, the advantages of below ground storage tanks, the need to recycle backwash waste water back to the wet wells so that all water containing PFASs is treated.

2.3 Finished Water

Select finished water requirements and other parameters are shown in Table 2-3. PFOS and PFOA will be removed with GAC to levels below the health advisory (HA) of 0.07 μg/L (total combined PFOA and PFOS). The most current HA was established in May of 2016. In addition, the pH of the finished water must remain between 7.3-7.8 to comply with the Lead and Copper Rule and the residual orthophosphate in the water should be greater than 1.0 mg/L. Iron and Manganese concentrations will remain unaltered through the treatment system. Radon in the raw water will be removed in the aeration tower; any residual radon will be removed by the GAC. Total organic carbon will initially be removed by the GAC, however, it is anticipated that TOC breakthrough of the GAC will occur before PFOS/PFOA breakthrough.

Table 2-3 – Finished Water Quality Requirements

Parameter	Finished Water
Select Requirements	
PFOS (ng/L)	<70
PFOA (ng/L)	<70
PCE (µg/L)	<5
pH	7.3-7.8
Orthophosphate (mg/L)	>1
Other Select Water Quality Goals	
Iron (mg/L)	Same as influent
Manganese (mg/L)	Same as influent
Radon (pCi/L)	ND
Total Organic Carbon (mg/L)	Same as influent

2.4 Analogous System Research

A list of the drinking water utilities that were contacted to gather analogous water quality data are listed in Table 2-4; further information on these system is reported in Appendix B. Of the 15 systems listed, none have PFAS concentrations similar to the concentrations of PFOS and PFOA in the blended water at the Pease system. Nine of the 15 systems have, or will soon have, GAC treatment, 1 system will utilize GAC and resin, 1 system will focus on point of use GAC treatment, 3 will not be treating their wells (raw water concentrations below the HA levels), and 1 did not provide information. Treating water to remove PFASs with carbon is currently the standard method of treatment. Carbon allows for the capture of the contaminant and the shipment of the contaminated carbon offsite for safe incineration. From the limited operational data available, it appears carbon can last 20,000+ bed volumes provided total organic carbon levels are not high. What is important to note from this gathering of information is the necessity to tailor the carbon selection to the individual water sources. For example, piloting by some systems such as Suffolk County Water Authority has shown the failure of coconut based carbon to sufficiently capture PFOS and PFOA (Figure 2-1) while the Issaquah system is using coconut carbon in their full scale system, and has reported successful removal. Bituminous coal-based GAC has been shown to be effective at removing PFASs from water from the Harrison and Smith Wells in the Demonstration Study.

Table 2-4 – Drinking Water Utilities Contacted for Information

Drinking Water Utility
Aqua America (PA)
Barnstable (MA)
Bennington (VT)
Hoosick Falls (NY)
Horsham (PA)
Issaquah (WA)
Joint Base McGuire-Dix-Lakehurst (NJ)
Little Hocking (OH)
Merrimack Valley District (NH)
New Castle (DE)
Oakdale (MN)
Oatman Water Co. (AZ)
Suffolk County (NY)
West Morgan-East Lawrence (AL)
Wurtsmith (MI)

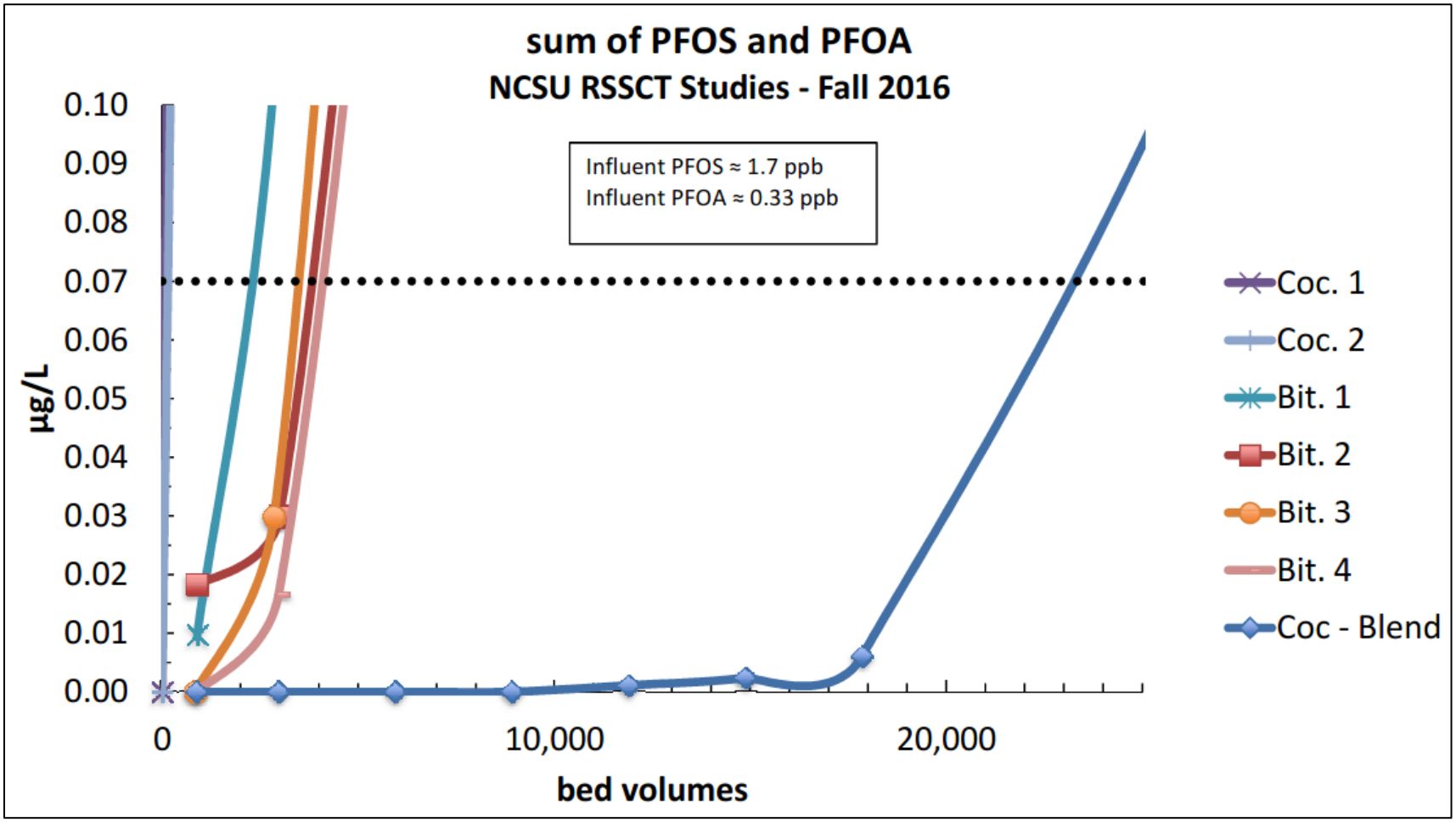

Figure 2-1 – Suffolk County Column Test

3.0 TREATMENT FACILITY DESCRIPTION

3.1 Design Criteria

The combined flow will enter the treatment plant and will be treated as a blend with water quality shown in Table 2-2. New Hampshire follows the Ten States Standards which requires "n-1" redundancy for treatment plant equipment. This redundancy standard states that if an asset were to be taken offline, there must be enough capacity in the remaining assets to handle maximum flow conditions. Due to this design requirement, two aeration towers are needed with two wet wells, two pumps to pump from each wet well, and four pair of GAC vessels are needed (three pair are necessary for full flow). Having this redundancy creates a more resilient plant but requires more space necessitating building expansion. A flow diagram of the proposed schematic is shown in Figure 3-1.

As discussed earlier, the treatment plant will have aeration towers to strip radon and potential VOCs that may arise in the Haven Well. Water will be pumped out of the wet wells through the GAC vessels. The vessels will have an EBCT of at least 10 minutes to allow for proper PFAS adsorption. Water will then recombine in a header before being treated with fluoride, phosphate, and hypochlorite. Upon installation of new carbon, the filters will be backwashed to remove carbon fines. The backwash waste water will be stored in a backwash waste tank. To minimize the volume of PFAS contaminated water, a recycle system will pump the supernatant water from the waste tank back to the wet wells. The filter vessels will also have the ability to filter to waste on startup to minimize pH fluctuations associated with virgin carbon that may impact compliance with the Lead and Copper Rule.

3.2 Sequence of Construction

3.2.1 Retrofitting Existing Building

Retrofitting the existing water treatment plant on Grafton Road poses several unique challenges. Due to water supply requirements, the demonstration filters, booster pumps, and all ancillary equipment must remain in operation during construction. Demolition and construction of new equipment would need to occur around these vital features. A plan view of the retrofitted building and a site plan are shown in Figures 3-2 and 3-3, respectively. The approximate sequence of construction is detailed below.

- Excavate and form below grade tanks
- Place two pair of GAC vessels and two aeration towers in new portion of building
- Expand front of building to include chemical storage rooms and new restroom
- Install remaining equipment necessary to start up new GAC vessels
- Upgrade and reposition existing GAC vessels and install final pair of GAC vessels in the old portion of the building
- Upgrade lab space

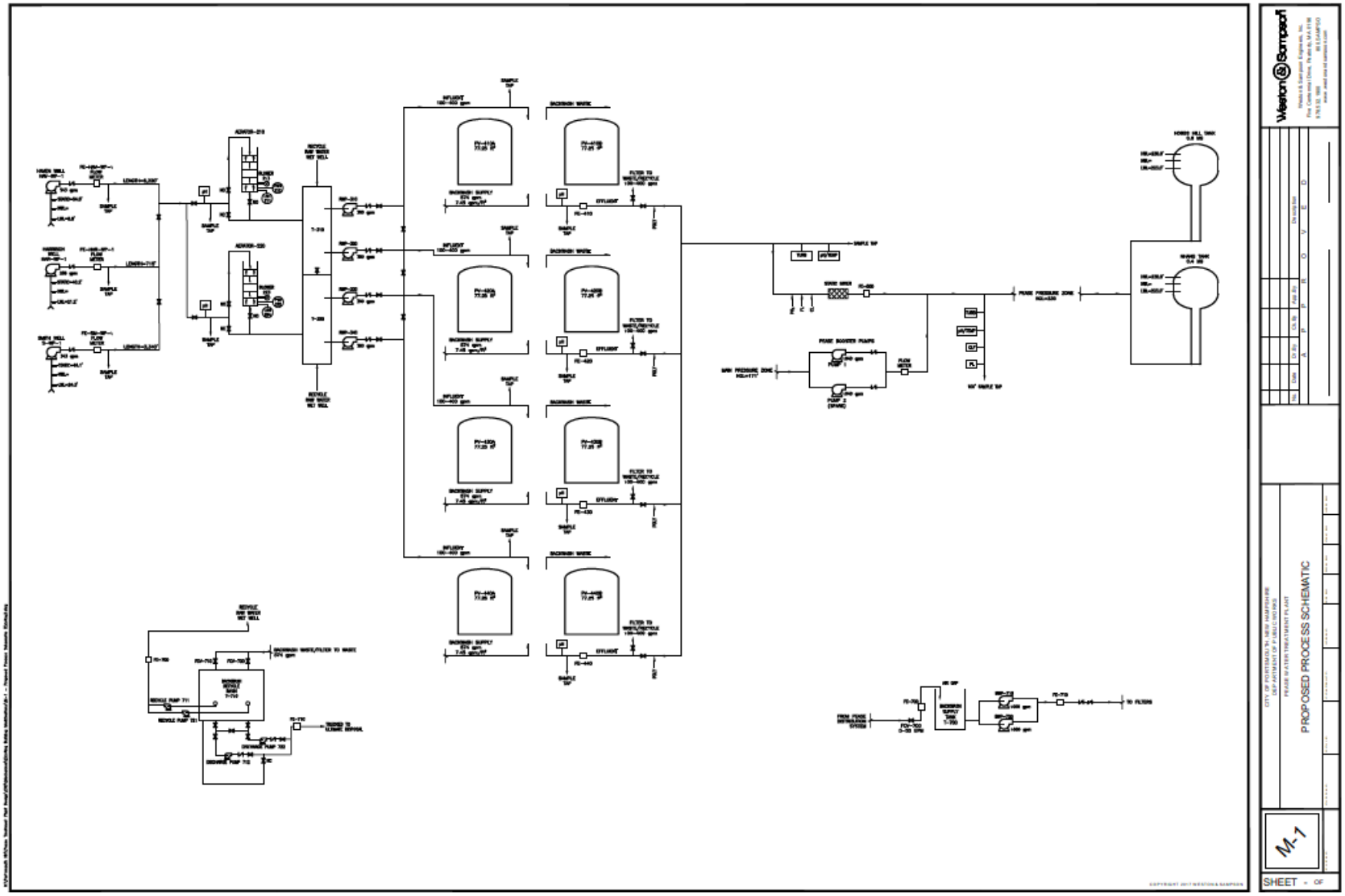

Figure 3-1 – Proposed Process Flow Schematic

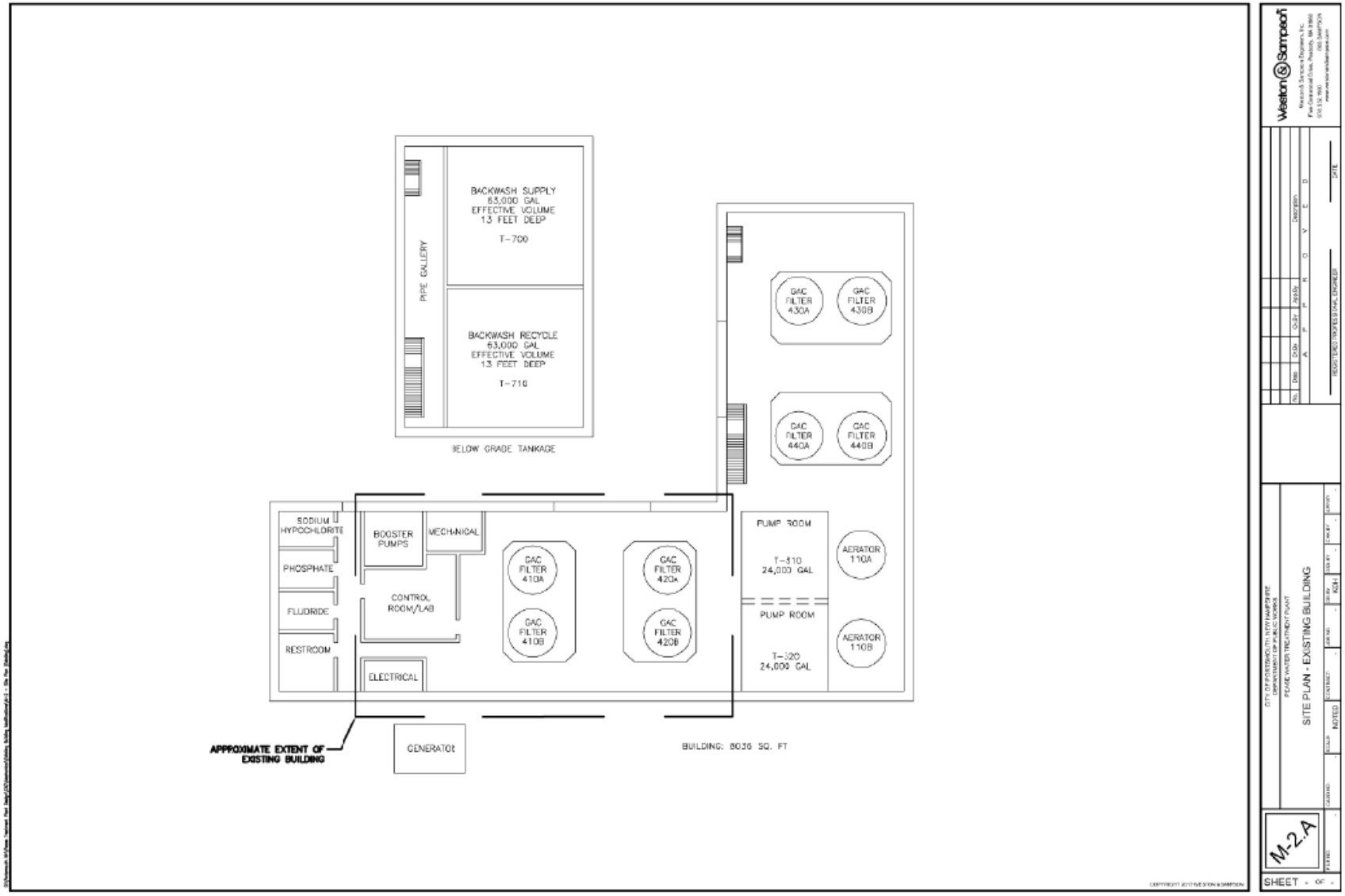

Figure 3-2 – Retrofit Building Layout

Figure 3-3 – Building Retrofit Site Plan

3.2.2 New Building

In comparison to the building retrofit, construction a new facility on the adjacent lot is simpler from a sequencing standpoint. The demonstration study GAC filters would need to remain in operation until the new facility can produce sufficient flow to meet water demands of the Pease Tradeport. Once enough water can be produced from the new facility, the demonstration filters can be moved and the existing facility can be demolished. A plan view of the retrofitted building and a site plan are shown in Figures 3-4 and 3-5, respectively. The approximate sequence of construction is detailed below.

- Excavate and form below grade tanks
- Place three pair of GAC vessels and two aeration towers
- Construct the front end of the building housing the lab/control room, chemical storage rooms, mechanical and electrical rooms and the new restroom
- Install all remaining equipment necessary to start up new GAC vessels
- Move the demonstration GAC vessels from the existing building to the new facility
- Demolish the existing facility

3.3 Carbon Life Projection

General industry information suggests GAC systems are designed for and expected to effectively remove PFASs for 20,000 bed volumes. This however, is dependent on several factors including (1) which perfluorinated compounds are being analyzed, (2) the interactions between the specific water source and (3) the PFAS makeup, and the acceptable amount of breakthrough or reserve carbon.

(1) Short chain compounds do not adsorb to GAC as efficiently as long chain compounds. If treating for short chain compounds in addition to long chain compounds, breakthrough could be expected to occur much earlier in the bed life.
(2) GAC interacts differently with different source waters and their respective water quality constituents. Coconut carbon works well for some water sources, as is being shown in Issaquah, while not well with other waters, as shown in the column study performed using water from the Suffolk County Water Authority. Tailoring the carbon to the specific water source is vital to ensuring long bed life.
(3) The final determination in carbon life revolves around carbon changeout procedures. Some utilities will not accept any breakthrough of any constituents while other may allow some unregulated short chain compounds to breakthrough. Most utilities treat for PFOS/PFOA and only to the HA. Almost all analogous systems ran their filters in a lead/lag orientation. Some of these utilities were experimenting with flipping the lead and the lag vessels to try to promote longer carbon life.

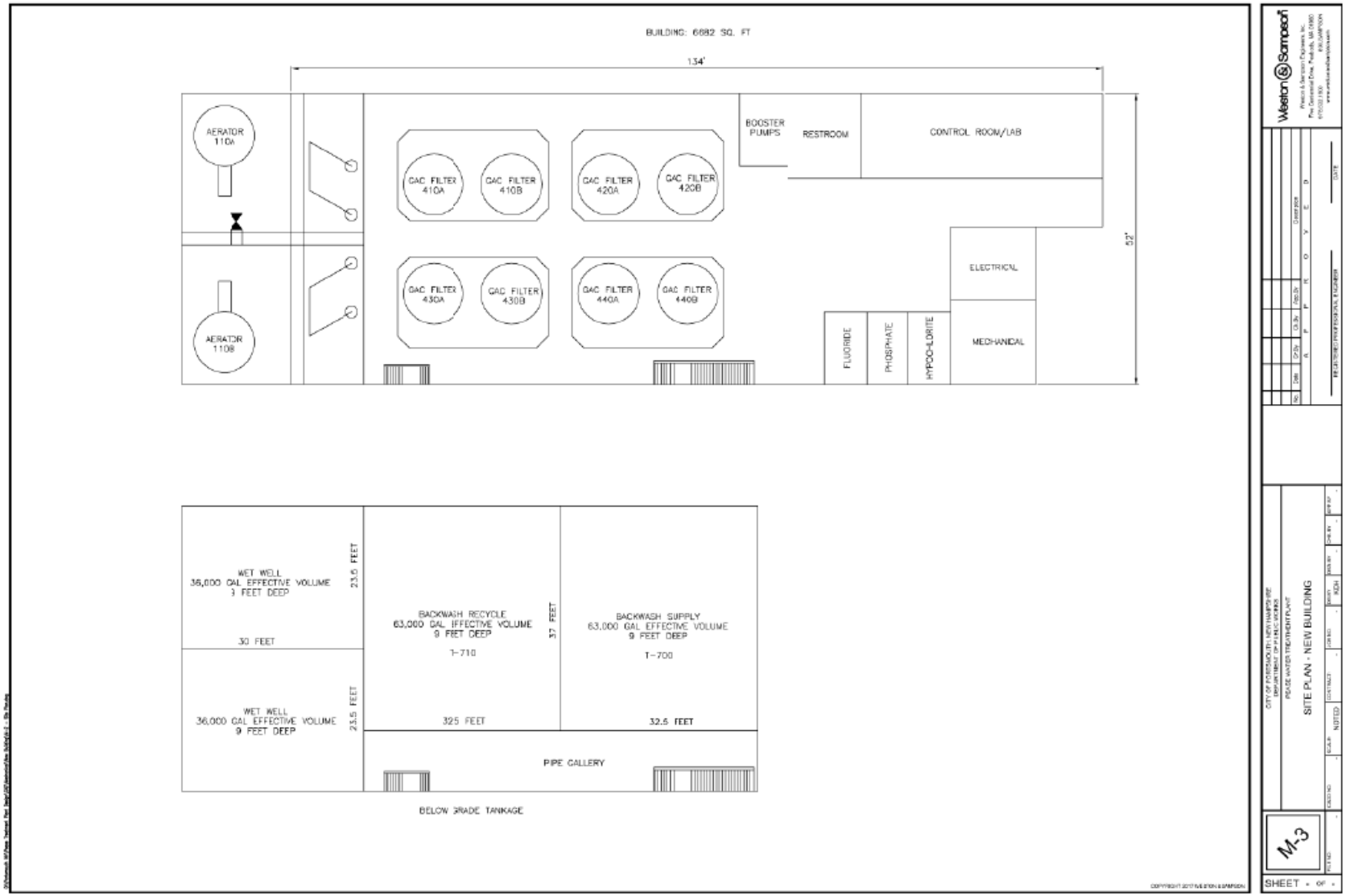

Figure 3-4 – New Building Layout

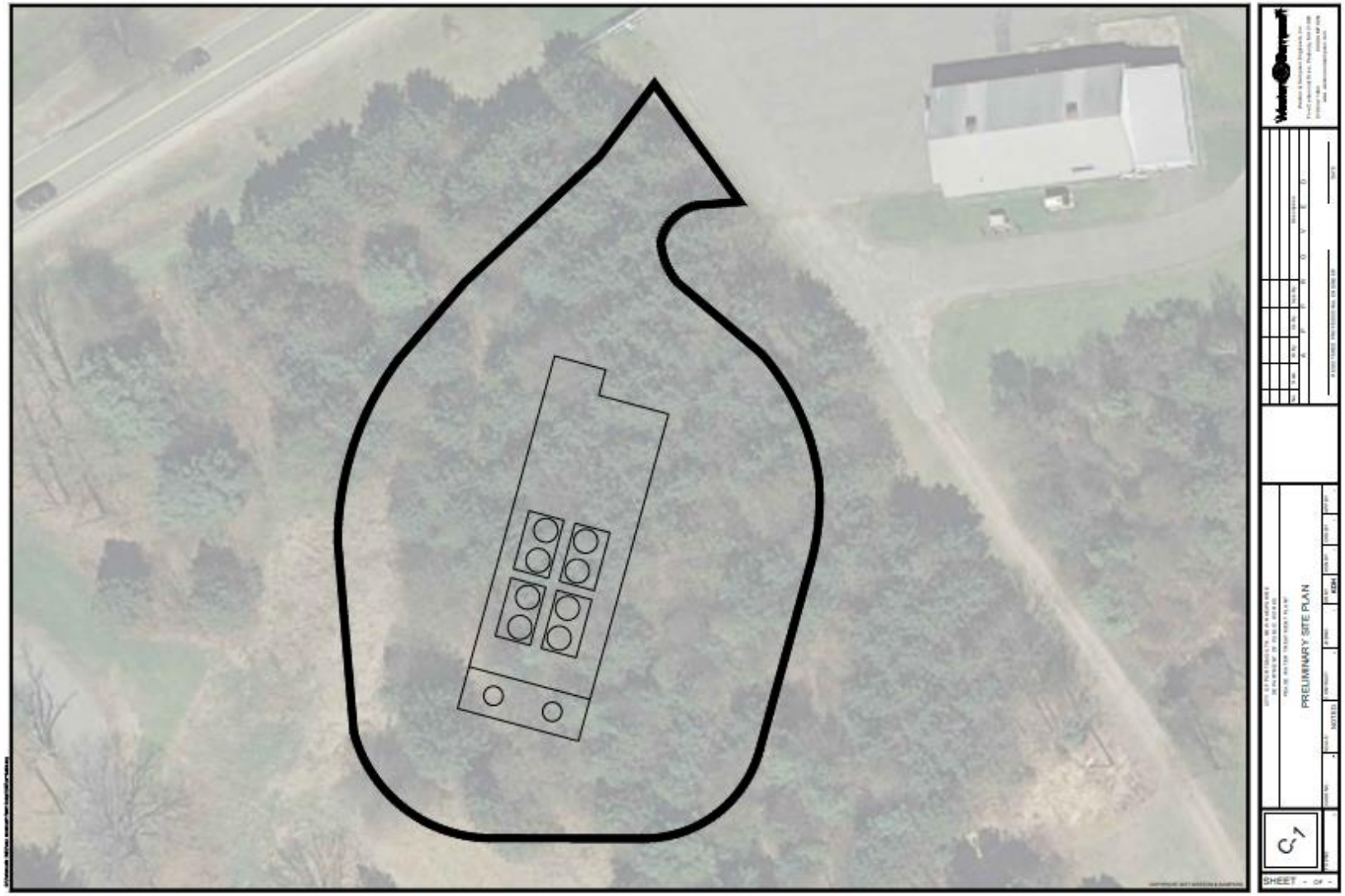

Figure 3-5 – New Building Site Plan

4.0 ESTIMATED PROJECT COSTS

4.1 Cost Estimate

4.1.1 Capital Costs

Retrofitting the existing building is estimated to have a capital cost of approximately $13,170,000. Design costs for this alternative are estimated to be $1,317,000 with a recommended budget for construction administrative and resident representative costs of 10-15% of the total construction cost.

Constructing a new facility on the adjacent lot to the current facility is estimated to have a capital cost of approximately $12,906,000. This construction cost includes demolition of the existing facility including structures, piping, and foundation components. Design costs for this alternative are estimated to be $1,291,000 with a recommended budget for construction administrative and resident representative costs of 10-15% of the total construction cost.

A detailed breakdown of the costs in located in Appendix C.

4.1.2 Annual Costs

The retrofitted building and the new facility are expected to have near identical annual operating and maintenance costs of approximately $163,000. This covers costs associated with electrical, chemical, and staffing costs (48 hours/week average). This excludes GAC replacement which should be identical between the different alternatives. The new facility would require a land lease from the Pease Development Authority on the order of $16,500/acre/yr.

4.1.3 Present Worth Comparison

A present worth comparison using the above capital and annual costs for 30 years at an interest rate of 3% is shown below in Table 4-1.

Table 4-1 – Present Worth Comparison of Design Options

Design Option	Present Worth Cost
Building Retrofit	$19,658,000
New Facility	$19,651,000

O:\Portsmouth NH\Pease Treatment Plant Design\Design Report\Design Report Body.docx

APPENDIX A

Demonstration Study Results

Sample Location	Sample ID	Collection Date	6:2 Fluorotelomer sulfonate (6:2 FTS)	8:2 Fluorotelomer sulfonate (8:2 FTS)	N-Ethyl perfluorooctane sulfonamide (EtFOSA)	N-Ethyl perfluorooctane sulfonamidoethanol (EtFOSE)	N-Methyl Perfluorooctane Sulfonamide (MEFOSA)	N-Methyl Perfluorooctane Sulfonamidoethanol (MEFOSE)	Perfluorobutanesulfonic acid (PFBS)	Perfluorobutanoic acid (PFBA)	Perfluorodecane sulfonate (PFDS)	Perfluorodecanoic acid (PFDA)	Perfluorododecanoic acid (PFDoA)	Perfluoroheptane sulfonate (PFHpS)	Perfluoroheptanoic acid (PFHpA)	Perfluorohexanesulfonic acid (PFHxS)	Perfluorohexanoic acid (PFHxA)	Perfluorooctanoic acid (PFOA)	Perfluorononanoic acid (PFNA)	Perfluorooctane sulfonamide (PFOSA)	Perfluorooctanesulfonic acid (PFOS)	Perfluoropentanoic acid (PFPeA)	Perfluorotetradecanoic acid (PFTeDA)	Perfluorotridecanoic acid (PFTrDA)	Perfluoroundecanoic acid (PFUnA)	PFOS+PFOA
USEPA Health Advisory (HA):			-	-	-	-	-	-	-	-	-	-	-	-	-	-	-	0.07	-	-	0.07	-	-	-	-	0.07
Method Detection Limit (MDL)			0.0065	0.0055	0.0053	0.0049	0.0040	0.0061	0.0019	0.0066	0.0043	0.0066	0.0057	0.0036	0.0047	0.0040	0.0046	0.0053	0.0046	0.0058	0.0033	0.0036	0.0052	0.0032	0.0037	
Reported Detection Limit (RDL)			0.020	0.020	0.020	0.020	0.020	0.020	0.020	0.020	0.020	0.020	0.020	0.020	0.020	0.020	0.020	0.020	0.020	0.020	0.020	0.020	0.020	0.020	0.020	
Harrison Well		13-Sep-16	ND	ND	NA	NA	NA	NA	0.0029 B	ND	NA	NA	NA	ND	ND	0.0260 B	0.0071 J	0.006 J	ND	ND	0.022 B	0.008 B	NA	NA	NA	0.028
Smith Well		19-Sep-16	ND	ND	NA	NA	NA	NA	0.0072 J	0.0067 J	NA	NA	NA	ND	ND	0.0150 J	0.0053 J	0.006 J	ND	ND	0.013 J	0.007 J	NA	NA	NA	0.019 J
Harrison Well		26-Sep-16	ND	ND	NA	NA	NA	NA	0.0040 J	ND	NA	NA	NA	0.0042 J	ND	0.0340	0.0100 J	ND	ND	ND	0.024	0.014 J	NA	NA	NA	0.024
Smith Well		26-Sep-16	ND	ND	NA	NA	NA	NA	0.0029 J	ND	NA	NA	NA	0.0036 J	ND	0.0140 J	0.0050 J	ND	ND	ND	0.010 J	0.008 J	NA	NA	NA	0.010 J
Harrison Well		19-Oct-16	ND	ND	NA	NA	NA	NA	0.0038 J	0.0069 J	NA	NA	NA	ND	0.0057 J	0.0320	0.0059 J	ND	ND	ND	0.022	0.009 J	NA	NA	NA	0.022
Smith Well		19-Oct-16	ND	ND	NA	NA	NA	NA	0.0035 J	ND	NA	NA	NA	ND	ND	0.0130 J	ND	ND	ND	ND	0.010 J	0.005 J	NA	NA	NA	0.010 J
Harrison Well		17-Nov-16	ND	ND	NA	NA	NA	NA	0.0026 J	0.0072 J	NA	NA	NA	ND	0.0059 J	0.0350	0.0085 J	0.006 J	ND	ND	0.026	0.013 J	NA	NA	NA	0.032
Smith Well		17-Nov-16	ND	ND	NA	NA	NA	NA	0.0020 J	ND	NA	NA	NA	ND	ND	0.0140 J	ND	ND	ND	ND	0.011 J	0.008 J	NA	NA	NA	0.011 J
Harrison Well		14-Dec-16	ND	ND	NA	NA	NA	NA	0.0062 J	0.0068 J	NA	NA	NA	ND	ND	0.0350	0.0120 J	0.0078 J	ND	ND	0.026	0.012 J	NA	NA	NA	0.034
Smith Well		14-Dec-16	ND	ND	NA	NA	NA	NA	ND	ND	NA	NA	NA	ND	ND	0.0150 J	0.0065 J	ND	ND	ND	0.012 J	0.0059 J	NA	NA	NA	0.012 J
Smith Well (Dup)		14-Dec-16	ND	ND	NA	NA	NA	NA	0.0055 J	ND	NA	NA	NA	ND	ND	0.0150 J	0.0057 J	ND	ND	ND	0.012 J	0.006 J	NA	NA	NA	0.012 J
Filter 2 Effluent	S1	22-Sep-16	ND	ND	ND	ND	ND	ND	ND	ND	ND	ND	ND	ND	ND	ND	ND	ND	ND	ND	ND	ND	ND	ND	ND	ND
Filter 1 - 25%	PV1-25	06-Oct-16	ND	ND	ND	ND	ND	ND	ND	ND	ND	ND	ND	ND	ND	ND	ND	ND	ND	ND	ND	ND	ND	ND	ND	ND
Filter 2 Effluent	PV2-100	06-Oct-16	ND	ND	ND	ND	0.0065 J	ND	ND	ND	ND	ND	ND	ND	ND	ND	ND	ND	ND	ND	ND	ND	ND	ND	ND	ND
Filter 1 - 25%	PV1-25	14-Oct-16	ND	ND	ND	ND	ND	ND	0.0022 B	ND	ND	ND	ND	ND	ND	ND	ND	ND	ND	ND	ND	ND	ND	ND	ND	ND
Filter 1 Effluent	PV1-100	14-Oct-16	ND	ND	ND	ND	ND	ND	0.0021 B	ND	ND	ND	ND	ND	ND	ND	ND	ND	ND	ND	ND	ND	ND	ND	ND	ND
Filter 2 Effluent	PV2-100	14-Oct-16	ND	ND	ND	ND	ND	ND	ND	ND	ND	ND	ND	ND	0.0053 J	ND	ND	ND	ND	ND	ND	ND	ND	ND	ND	ND
Filter 1 - 25%	PV1-25	20-Oct-16	ND	ND	ND	ND	ND	ND	ND	ND	ND	ND	ND	ND	ND	ND	ND	ND	ND	ND	ND	ND	ND	ND	ND	ND
Filter 1 Effluent	PV1-100	20-Oct-16	ND	ND	ND	ND	ND	ND	ND	ND	ND	ND	ND	ND	ND	ND	ND	ND	ND	ND	ND	ND	ND	ND	ND	ND
Filter 2 Effluent	PV2-100	20-Oct-16	ND	ND	ND	ND	ND	ND	ND	ND	ND	ND	ND	ND	ND	ND	ND	ND	ND	ND	ND	ND	ND	ND	ND	ND
Filter 1 - 25%	PV1-25	28-Oct-16	ND	ND	ND	ND	ND	ND	ND	ND	ND	ND	0.0082 J	ND	ND	ND	0.0062 J	ND	0.0052 J	ND	ND	ND	ND	0.0082 J	0.0084 J	ND
Filter 1 Effluent	PV1-100	28-Oct-16	ND	ND	ND	ND	ND	ND	ND	ND	ND	ND	ND	ND	ND	ND	ND	ND	0.0049 J	ND	ND	ND	ND	0.0078 J	0.0081 J	ND
Filter 2 Effluent	PV2-100	28-Oct-16	ND	ND	ND	ND	ND	ND	ND	ND	ND	ND	ND	ND	ND	0.0040 J	ND	ND	ND	ND	ND	ND	ND	ND	ND	ND
Filter 1 - 25%	PV1-25	10-Nov-16	ND	ND	ND	ND	ND	ND	ND	ND	ND	ND	ND	ND	ND	ND	ND	ND	ND	ND	ND	ND	ND	ND	ND	ND
Filter 1 Effluent	PV1-100	10-Nov-16	ND	ND	ND	ND	ND	ND	ND	ND	ND	ND	ND	ND	ND	ND	ND	ND	ND	ND	ND	ND	ND	ND	ND	ND
Filter 1 - 25%	PV1-25	28-Nov-16	ND	ND	ND	ND	ND	ND	ND	ND	ND	ND	ND	ND	ND	ND	ND	ND	ND	ND	ND	ND	ND	ND	ND	ND
Filter 1 Effluent	PV1-100	28-Nov-16	ND	ND	ND	ND	ND	ND	ND	ND	ND	ND	ND	ND	ND	ND	ND	ND	ND	ND	ND	ND	ND	ND	ND	ND
Filter 1 - 25%	PV1-25	27-Dec-16	ND	ND	ND	ND	ND	ND	ND	ND	ND	ND	ND	ND	ND	ND	ND	ND	ND	ND	ND	ND	ND	ND	ND	ND
Filter 1 Effluent	PV1-100	27-Dec-16	ND	ND	ND	ND	ND	ND	ND	ND	ND	ND	ND	ND	ND	ND	ND	ND	ND	ND	ND	ND	ND	ND	ND	ND
Filter 1 - 25%	PV1-25	16-Jan-17	ND	ND	ND	ND	ND	ND	ND	ND	ND	ND	ND	ND	ND	ND	ND	ND	ND	ND	ND	ND	ND	ND	ND	ND
Filter 1 Effluent	PV1-100	16-Jan-17	ND	ND	ND	ND	ND	ND	ND	ND	ND	ND	ND	ND	ND	ND	ND	ND	ND	ND	ND	ND	ND	ND	ND	ND
Filter 1 - 25%	PV1-25	10-Feb-17	ND	ND	ND	ND	ND	ND	ND	ND	ND	ND	ND	ND	ND	ND	ND	ND	ND	ND	ND	ND	ND	ND	ND	ND
Filter 1 Effluent	PV1-100	10-Feb-17	ND	ND	ND	ND	ND	ND	ND	ND	ND	ND	ND	ND	ND	ND	ND	ND	ND	ND	ND	ND	ND	ND	ND	ND
Filter 1 - 25%	PV1-25	07-Mar-17	ND	ND	ND	ND	ND	ND	ND	ND	ND	ND	ND	ND	ND	ND	ND	ND	ND	ND	ND	ND	ND	ND	ND	ND
Filter 1 Effluent	PV1-100	07-Mar-17	ND	ND	ND	ND	ND	ND	ND	ND	ND	ND	ND	ND	ND	ND	ND	ND	ND	ND	ND	ND	ND	ND	ND	ND
Filter 1 - 25%	PV1-25	20-Mar-17	ND	ND	ND	ND	ND	ND	ND	ND	ND	ND	ND	ND	ND	ND	ND	ND	ND	ND	ND	ND	ND	ND	ND	ND
Filter 1 Effluent	PV1-100	20-Mar-17	ND	ND	ND	ND	ND	ND	ND	ND	ND	ND	ND	ND	ND	ND	ND	ND	ND	ND	ND	ND	ND	ND	ND	ND
Filter 1 - 25%	PV1-25	27-Mar-17	ND	ND	ND	ND	ND	ND	ND	ND	ND	ND	ND	ND	ND	ND	ND	ND	ND	ND	ND	ND	ND	ND	ND	ND
Filter 1 - 50%	PV1-50	27-Mar-17	ND	ND	ND	ND	ND	ND	ND	ND	ND	ND	ND	ND	0.0056 J	ND	ND	ND	ND	ND	ND	ND	ND	ND	ND	ND
Filter 1 Effluent	PV1-100	27-Mar-17	ND	ND	0.0097 J	ND	ND	0.0052 J	ND	ND	ND	ND	ND	ND	ND	0.0068 J	ND	ND	ND	ND	0.0036 J	ND	ND	0.0033 J	ND	ND

Notes:
Grey text indicates the parameter was not analyzed or not detected.
All concentrations in µg/L - micrograms per liter (ppb)
J - The result is an estimated value.
B - Detected in Blank.

USEPA - Environmental Protection Agency
NA - Not Analysed or Not Applicable
ND - Not detected
— - No Health Advisory available

- Denotes 'B' value, detected in blank
- Denotes raw water influent sample
- Denotes short chain compound

APPENDIX B

Analogous System Data

	Treatment Date	*Treatment Type*	*PFAS Concentration (ppb)*	*Flow Rate (gpm)*	*Type of Carbon*	*Approximate Carbon Life*	*Sampling Frequency*	*Changeout Criteria*
Pease (NH)	**2016**	**GAC**	**<u>Blend</u>** **PFOA: 0.155** **PFOS: 1.134**	**1163**	**F400**	**-**	**-**	**-**
Aqua America (PA)	N/A	N/A	All PFAS < 0.07	N/A	N/A	N/A	Every Other Week to Monthly	N/A
Barnstable (MA)	2015	GAC	PFOA: 0.18 PFOS: 0.11	-	-	-	-	-
Bennington (VT)	2016	GAC (POE)	PFOA: 1.0	N/A	-	N/A	-	-
Hoosick Falls (NY)	2016	GAC	PFOA: 0.45	0.45 MGD	F400	-	Weekly	-
Horsham (PA)	2016	GAC + Resin	PFOS: 1.0	-	-	N/A	-	-
Issaquah (WA)	2016	GAC	PFOS: 0.40	0.33 MGD	TIGG 5DC 1230 NSF	14,700+ BV	Every Other Week	-
Joint Base McGuire-Dix-Lakehurt (NJ)	N/A	N/A	Combined PFOA/PFOS<0.07	N/A	N/A	N/A	-	-
Little Hocking (OH)	2007	GAC	PFOA: 0.37-21	-	F600	2-3 Months	Every Other Week	Quantifiable PFOA breakthrough of lead filter
Merrimack Valley District (NH)	N/A	GAC	PFOA: 0.09	-	-	N/A	-	-
New Castle (DE)	2015	GAC	PFOA: 0.14 PFOS: 1.3	1100	F400	1.5+ years	Several Times per Year	-
Oakdale (MN)	2006	GAC	PFOA: 0.64 PFOS: 0.71	2400	F600	53,000 BV	Monthly	When PFOA effluent from lead filter is 50% raw water concentration, let other compounds pass through
Oatman (AZ)	-	-	PFOA: 0.032 PFOS: 0.30	-	-	-	-	-
Suffolk County (NY)	2016	GAC	PFOA: 0.33 PFOS: 1.7	-	F23	20,000 BV (Column)	-	-
West Morgan-East Lawrence (AL)	2016	GAC	PFOA: 0.15 PFOS: 0.12	3500	-	N/A	-	-
Wurtsmith (MI)	N/A	N/A	Combined PFOA/PFOS<0.07	N/A	N/A	N/A	-	-

APPENDIX C

Detailed Cost Estimate

April 2017 Estimate of Probable Construction Cost

Refurbish / Expand Grafton Rd Plant

Alternative 1

Portsmouth, NH

Item		Unit Cost	Units	Total
1	General Conditions	$1,000,000	1	$1,000,000
2	Site Work	$200,000	1	$200,000
3	Sewer Work	$250	1000	$250,000
4	Demolition	$250,000	1	$250,000
5	Site Piping & conduit	$150	800	$120,000
6	Masonry	$75	12324	$763,125
7	Roofing	$35	9353	$327,355
8	Trusses	$16	8036	$128,576
9	Temporary Const & sequencing constrai	$750,000	1	$750,000
10	Painting	$250,000	1	$250,000
11	Well Pumps	$60,000	3	$180,000
12	Raw Water pumps	$60,000	4	$240,000
13	Emergency Supply Pumps	$90,000	2	$180,000
14	Backwash Pumps	$40,000	2	$80,000
15	Waste Pumps	$20,000	2	$40,000
16	Chemical Feed Equipment	$60,000	3	$180,000
17	GAC Filters & media - (4 pair filters)	$535,000	4	$2,140,000
18	Concrete Slab on Grade	$125,000	1	$125,000
19	BW Holding and Storage Below Ground Tanks (2) inc. piping gallery	$1,000,000	1	$1,000,000
20	Aeration	$230,000	2	$460,000
21	Lab Furnishings	$75,000	1	$75,000
22	Bathroom	$80,000	1	$80,000
23	Instrumentation	$50,000	1	$50,000
24	SCADA Controls	$125,000	1	$125,000
25	Analyzers	$15,000	5	$75,000
26	Valves	$10,000	20	$200,000
27	Interior Piping	$200	1300	$260,000
28	HVAC and Plumbing	$300,000	1	$300,000
29	Electrical	$750,000	1	$750,000
30	Sprinkler system	$96,000	1	$96,000
31	Emergency Generator w/ ATS	$300,000	1	$300,000
	Construction Subtotal			$ 10,975,056
	Contingency (20%)			$ 2,195,011
	Total Construction			**$ 13,170,067**
	Engineering Design / Permitting (10%)			**$ 1,317,007**
	CA&RR (Recommend 10-15% of Total Construction)			

Assumptions

Below Ground Backwash storage and holding tanks

Four new pair of GAC filter vessels

Treatment of 1163 gpm blended raw water

April 2017 Estimate of Probable Construction Cost				
New Facility				
Alternative 2				
Portsmouth, NH				
Item		Unit Cost	Units	Total
1	General Conditions	$1,000,000	1	$1,000,000
2	Site Work	$500,000	1	$500,000
3	Sewer Work	$250	700	$175,000
4	Demolition	$750,000	1	$750,000
5	Site Piping & conduit	$150	3000	$450,000
6	Masonry	$75	9672	$725,400
7	Roofing	$35	7730	$270,550
8	Trusses	$16	6682	$106,912
9	Painting	$200,000	1	$200,000
10	Well Pumps	$60,000	3	$180,000
11	Raw Water pumps	$60,000	4	$240,000
12	Emergency Supply Pumps	$90,000	2	$180,000
13	Backwash Pumps	$40,000	2	$80,000
14	Waste Pumps	$20,000	2	$40,000
15	Chemical Feed Equipment	$60,000	3	$180,000
16	GAC Filters (4 pair filters)	$535,000	4	$2,140,000
17	BW Holding and Storage Below Ground Tanks (2) inc. piping gallery	$1,300,000	1	$1,300,000
18	Aeration	$230,000	2	$460,000
19	Lab Furnishings	$75,000	1	$75,000
20	Bathroom	$80,000	1	$80,000
21	Instrumentation	$50,000	1	$50,000
22	SCADA Controls	$125,000	1	$125,000
23	Analyzers	$15,000	5	$75,000
24	Valves	$10,000	20	$200,000
25	Interior Piping	$200	1000	$200,000
26	HVAC and Plumbing	$250,000	1	$250,000
27	Electrical	$600,000	1	$600,000
28	Sprinkler system	$80,000	1	$80,000
29	Emergency Generator w/ ATS	$300,000	1	$300,000
30	Concrete Slab on Grade	$210,000	1	$210,000
	Construction Subtotal			$ 11,222,862
	Contingency (15%)			$ 1,683,429
	Total Construction			**$ 12,906,291**
	Engineering Design (10%)			**$ 1,290,629**
	CA&RR (Recommend 10-15% of Total Construction)			
Assumptions:				
Below ground backwash storage and holding tanks				
Four new pair of GAC filter vessels				
Treatment of 1163 gpm blended raw water				