CALIFORNIA REGIONAL WATER QUALITY CONTROL BOARD
SAN DIEGO REGION

2375 Northside Drive, Suite 100, San Diego, CA 92108
619-516-1990 • Fax 619-516-1994
http://www.waterboards.ca.gov/sandiego/

ORDER NO. R9-2014-0009
AS AMENDED BY ORDER NOS. R9-2014-0094, R9-2017-0024, and R9-2019-0012
NPDES NO. CA0108928

WASTE DISCHARGE REQUIREMENTS FOR THE UNITED STATES SECTION OF THE INTERNATIONAL BOUNDARY AND WATER COMMISSION, SOUTH BAY INTERNATIONAL WASTEWATER TREATMENT PLANT, DISCHARGE TO THE PACIFIC OCEAN VIA THE SOUTH BAY OCEAN OUTFALL

The following Discharger is subject to waste discharge requirements (WDR's) set forth in this Order:

Table 1. Discharger Information

Discharger	United States Section of the International Boundary and Water Commission (USIBWC)
Name of Facility	South Bay International Wastewater Treatment Plant
Facility Address	2995 Clearwater Way
	San Diego, CA 92154
	San Diego County

Table 2. Discharge Location

Discharge Point No.	Effluent Description	Discharge Point Latitude (North)	Discharge Point Longitude (West)	Receiving Water
001	Secondary treated wastewater	32° 32' 15" N	117° 11' 00" W	Pacific Ocean

Table 3. Administrative Information

This Order was adopted on:	**June 26, 2014**
This Order shall become effective on:	**August 1, 2014**
This Order shall expire on:	**July 31, 2019**
The Discharger shall file a Report of Waste Discharge as an application for reissuance of WDR's in accordance with title 23, California Code of Regulations, and an application for reissuance of a National Pollutant Discharge Elimination System (NPDES) permit no later than:	**180 days prior to the Order expiration date**
The U.S. Environmental Protection Agency (USEPA) and the California Regional Water Quality Control Board, San Diego Region have classified this discharge as follows:	**Major**

I, David W. Gibson, Executive Officer, do hereby certify that this Order with all attachments is a full, true, and correct copy of the Order adopted by the California Regional Water Quality Control Board, San Diego Region, on June 26, 2014, and amended on November 12, 2014, December 13, 2017, and February 13, 2019.

James G. Smith, Acting Executive Officer

Contents

I. Facility Information ... 3
II. Findings ... 3
III. Discharge Prohibitions ... 4
IV. Effluent Limitations and Discharge Specifications ... 4
A. Effluent Limitations and Performance Goals – Discharge Point No. 001 ... 4
1. Final Effluent Limitations – Discharge Point No. 001 ... 4
2. Performance Goals – Discharge Point No. 001 ... 6
3. Interim Effluent Limitations - Not Applicable ... 10
B. Land Discharge Specifications – Not Applicable ... 10
C. Recycling Specifications – Not Applicable ... 10
V. Receiving Water Limitations ... 11
A. Surface Water Limitation ... 11
B. Groundwater Limitations – Not Applicable ... 12
VI. Provisions ... 12
A. Standard Provisions ... 12
B. Monitoring and Reporting Program (MRP) Requirements ... 14
C. Special Provisions ... 14
1. Reopener Provisions ... 14
2. Special Studies, Technical Reports and Additional Monitoring Requirements ... 15
3. Best Management Practices and Pollution Prevention – Not Applicable ... 32
4. Construction, Operation and Maintenance Specifications – Not Applicable ... 32
5. Special Provisions for Municipal Facilities (Wastewater Facilities Only) ... 32
6. Other Special Provisions - Responsibilities, Liabilities, Legal Action, Penalties – Not Applicable ... 42
7. Compliance Schedules – Not Applicable ... 42
VII. Compliance Determination ... 42

Tables

Table 1. Discharger Information ... 1
Table 2. Discharge Location ... 1
Table 3. Administrative Information ... 1
Table 4. Effluent Limitations at EFF-001[1] ... 5
Table 5. Performance Goals[1] ... 6
Table 6. Sharing Transboundary Wastewater Information with Mexico ... 25
Table 7. Final Influent Limitations ... 33
Table 8. Sharing Pretreatment Information with Mexico ... 37

Attachments

Attachment A – Abbreviations and Glossary ... A-1
Attachment B – Map ... B-1
Attachment C – Flow Schematic ... C-1
Attachment D – Standard Provisions ... D-1
Attachment E – Monitoring and Reporting Program ... E-1
Attachment F – Fact Sheet ... F-1
Attachment G – Ocean Plan and Basin Plan Prohibitions ... G-1
Attachment H – Dilution Model Information ... H-1

I. FACILITY INFORMATION

General information about the South Bay International Wastewater Treatment Plant (Facility) is summarized in Table 1. More detailed information describing the Facility, five canyon collectors, two pump stations, the South Bay Land Outfall (SBLO), the South Bay Ocean Outfall (SBOO), and other associated infrastructure (collectively referred to as Facilities) is contained in sections I and II of the Fact Sheet (Attachment F). Section I of the Fact Sheet also includes information regarding the Discharger's permit application.

II. FINDINGS

The California Regional Water Quality Control Board, San Diego Region (San Diego Water Board), finds:

A. **Legal Authorities.** This Order serves as WDR's pursuant to article 4, chapter 4, division 7 of the California Water Code (commencing with section 13260). This Order is also issued pursuant to section 402 of the federal Clean Water Act (CWA) and implementing regulations adopted by the USEPA and chapter 5.5, division 7 of the Water Code (commencing with section 13370). It shall serve as an NPDES permit for point source discharges from this Facility to surface waters.

B. **Background and Rationale for Requirements.** The San Diego Water Board developed the requirements in this Order based on information submitted as part of the application, through monitoring and reporting programs, and other available information. The Fact Sheet (Attachment F), which contains background information and rationale for the requirements in this Order, is hereby incorporated into and constitutes Findings for this Order. Attachments A through E, G, and H are also incorporated into this Order.

C. **Provisions and Requirements Implementing State Law.** The provisions/requirements in subsections IV.B, IV.C, V.B, VI.A.2, VI.C.1.b, and VI.C.1.c are included to implement state law only. These provisions/requirements are not required or authorized under the federal CWA; consequently, violations of these provisions/requirements are not subject to the enforcement remedies that are available for NPDES violations.

D. **Notification of Interested Parties.** The San Diego Water Board has notified the Discharger and interested agencies and persons of its intent to prescribe WDR's for the discharge and has provided them with an opportunity to submit their written comments and recommendations. Details of the notification are provided in the Fact Sheet (Attachment F).

E. **Consideration of Public Comment.** The San Diego Water Board, in a public meeting, heard and considered all comments pertaining to the discharge. Details of the Public Hearing are provided in the Fact Sheet (Attachment F).

THEREFORE, IT IS HEREBY ORDERED, that this Order supersedes Order No. 96-50 except for enforcement purposes, and, in order to meet the provisions contained in division 7 of the Water Code (commencing with section 13000) and regulations adopted thereunder, and the provisions of the CWA and regulations and guidelines adopted thereunder, the Discharger shall comply with the requirements in this Order. If any part of this Order is subject to a temporary stay of enforcement, unless otherwise specified in the order granting stay, the Discharger shall comply with the analogous portions of the previous Order. This action in no way prevents the San Diego Water Board from taking enforcement action for past violations of the previous Order.

III. DISCHARGE PROHIBITIONS

A. The discharge of waste from the Facilities to a location other than Discharge Point No. 001, unless specifically regulated by this Order or separate WDR's, is prohibited.

B. The Discharger must comply with Discharge Prohibitions contained in the *Water Quality Control Plan for Ocean Waters of California, California Ocean Plan* (Ocean Plan), incorporated into this Order as if fully set forth herein and summarized in Attachment G, as a condition of this Order.

C. The Discharger must comply with Discharge Prohibitions contained in chapter 4 of the Water Quality Control Plan for the San Diego Basin (Basin Plan), incorporated into this Order as if fully set forth herein and summarized in Attachment G, as a condition of this Order.

IV. EFFLUENT LIMITATIONS AND DISCHARGE SPECIFICATIONS

A. Effluent Limitations and Performance Goals – Discharge Point No. 001

1. Final Effluent Limitations – Discharge Point No. 001

a. The Discharger shall maintain compliance with the following effluent limitations at Discharge Point No. 001, with compliance measured at Monitoring Location EFF-001 as described in the Monitoring and Reporting Program (Attachment E):

Table 4. Effluent Limitations at EFF-001[1]

Parameter	Units[1,2]	Effluent Limitations[1,3]			
		Average Monthly	**Average Weekly**	**Instantaneous Minimum**	**Instantaneous Maximum**
Flow	MGD	25	--		--
Carbonaceous Biochemical Oxygen Demand (5-Day at 20°C) ($CBOD_5$)	mg/L	25	40		--
	lbs/day	5,213	8,340		--
Total Suspended Solids (TSS)	mg/L	30	45		--
	lbs/day	6,255	9,383		--
Oil and Grease	mg/L	25	40		75
	lbs/day	5,213	8,340		15,012
Settleable Solids	mL/L	1.0	1.5		3.0
Turbidity	NTU	75	100		225
pH	standard units	--	--	6.0	9.0
BASED ON OCEAN PLAN OBJECTIVES FOR PROTECTION OF MARINE AQUATIC LIFE					
		6-Month Median	**Maximum Daily**	**Instantaneous Minimum**	**Instantaneous Maximum**
Mercury, Total Recoverable	µg/L	3.78E+00	1.52E+01		3.82E+01
	lbs/day	7.87E-01	3.18E+00		7.96E+00
Zinc, Total Recoverable	µg/L	1.16E+03	6.89E+03	--	1.84E+04
	lbs/day	2.41E+02	1.44E+03	--	3.83E+03
Chronic Toxicity	TUc	--	95.6	--	--
Acute Toxicity	TUa	--	3.2	--	--
BASED ON OCEAN PLAN OBJECTIVES FOR PROTECTION OF HUMAN HEALTH					
		30-Day Average			
Thallium, Total Recoverable	µg/L	1.91E+02			
	lbs/day	3.99E+01			
Tributyltin	µg/L	1.34E-01			
	lbs/day	2.79E-02			
Benzidine	µg/L	6.60E-03			
	lbs/day	1.38E-03			
Chlordane[1]	µg/L	2.20E-03			
	lbs/day	4.58E-04			
Chlorodibromomethane (dibromochloromethane)	µg/L	8.22E+02			
	lbs/day	1.71E+02			
DDT[1]	µg/L	1.63E-02			
	lbs/day	3.39E-03			
Heptachlor Epoxide	µg/L	1.91E-03			
	lbs/day	3.99E-04			
Hexachlorobenzene	µg/L	2.01E-02			
	lbs/day	4.19E-03			
PCBs[1]	µg/L	1.82E-03			
	lbs/day	3.79E-04			
TCDD Equivalents[1]	µg/L	3.73E-07			
	lbs/day	7.77E-08			
Toxaphene	µg/L	2.01E-02			
	lbs/day	4.19E-03			

[1] See Attachment A for definitions of abbreviations and a glossary of common terms used in this Order.

[2] The mass emission rate (MER) limit, in pounds per day, was calculated based on the following equation: MER (lb/day) = 8.34 x Q x C, where Q is the maximum allowable flow rate (in MGD) and C is the concentration (in mg/L).

[3] Scientific "E" notation is used to express certain values. In scientific "E" notation, the number following the "E" indicates the position of the decimal point in the value. Negative numbers after the "E" indicate that the value is less than 1, and positive numbers after the "E" indicate that the value is greater than 1. In this notation a value of 6.1E-02 represents 6.1×10^{-2} or 0.061, 6.1E+02 represents 6.1×10^{2} or 610, and 6.1E+00 represents 6.1×10^{0} or 6.1.

b. **Percent Removal.** The average monthly percent removal[1] of $CBOD_5$ and TSS shall not be less than 85 percent.

2. Performance Goals – Discharge Point No. 001

Parameters that do not have reasonable potential to cause or contribute to an exceedance of water quality objectives, or for which reasonable potential to cause or contribute to an exceedance of water quality objectives cannot be determined, are referred to as performance goal parameters and are assigned the performance goals listed in the following table. Performance goal parameters shall be monitored at Monitoring Location EFF-001 as described in the Monitoring and Reporting Program, Attachment E. The San Diego Water Board will use the results for informational purposes only, not compliance determinations.

Table 5. Performance Goals[1]

Parameter	Unit[1,2]	Performance Goals[1,3]			
		6-Month Median	Maximum Daily	Instantaneous Maximum	30-Day Average
BASED ON OCEAN PLAN OBJECTIVES FOR PROTECTION OF MARINE AQUATIC LIFE					
Arsenic, Total Recoverable	µg/L	4.81E+02	2.78E+03	7.36E+03	--
	lbs/day	1.00E+02	5.79E+02	1.54E+03	--
Cadmium, Total Recoverable	µg/L	9.56E+01	3.82E+02	9.56E+02	--
	lbs/day	1.99E+01	7.97E+01	1.99E+02	--
Chromium VI, Total Recoverable[4]	µg/L	1.91E+02	7.65E+02	1.91E+03	--
	lbs/day	3.99E+01	1.59E+02	3.99E+02	--
Copper, Total Recoverable	µg/L	9.76E+01	9.58E+02	2.68E+03	--
	lbs/day	2.03E+01	2.00E+02	5.59E+02	--
Lead, Total Recoverable	µg/L	1.91E+02	7.65E+02	1.91E+03	--
	lbs/day	3.99E+01	1.59E+02	3.99E+02	--
Nickel, Total Recoverable	µg/L	4.78E+02	1.91E+03	4.78E+03	--
	lbs/day	9.97E+01	3.99E+02	9.97E+02	--
Selenium, Total Recoverable	µg/L	1.43E+03	5.74E+03	1.43E+04	--
	lbs/day	2.99E+02	1.20E+03	2.99E+03	--
Silver, Total Recoverable	µg/L	5.18E+01	2.53E+02	6.54E+02	--
	lbs/day	1.08E+01	5.27E+01	1.36E+02	--

[1] See Attachment A for definitions of abbreviations and a glossary of common terms used in this Order.

Parameter	Unit[1,2]	Performance Goals[1,3]			
		6-Month Median	Maximum Daily	Instantaneous Maximum	30-Day Average
Cyanide, Total Recoverable[5]	µg/L	9.56E+01	3.82E+02	9.56E+02	--
	lbs/day	1.99E+01	7.97E+01	1.99E+02	--
Total Chlorine Residual[6]	µg/L	1.91E+02	7.65E+02	5.74E+03	--
	lbs/day	3.99E+01	1.59E+02	1.20E+03	--
Ammonia (expressed as nitrogen)	µg/L	5.74E+04	2.29E+05	5.74E+05	--
	lbs/day	1.20E+04	4.78E+04	1.20E+05	--
Phenolic Compounds (non-chlorinated)[1]	µg/L	2.87E+03	1.15E+04	2.87E+04	--
	lbs/day	5.98E+02	2.39E+03	5.98E+03	--
Chlorinated Phenolics[1]	µg/L	9.56E+01	3.82E+02	9.56E+02	--
	lbs/day	1.99E+01	7.97E+01	1.99E+02	--
Endosulfan[1]	µg/L	8.60E-01	1.72E+00	2.58E+00	--
	lbs/day	1.79E-01	3.59E-01	5.38E-01	--
Endrin	µg/L	1.91E-01	3.82E-01	5.74E-01	--
	lbs/day	3.99E-02	7.97E-02	1.20E-01	--
HCH[1]	µg/L	3.82E-01	7.65E-01	1.15E+00	--
	lbs/day	7.97E-02	1.59E-01	2.39E-01	--
Radioactivity	pCi/l	Not to exceed limits specified in title 17, division 1, chapter 5, subchapter 4, group 3, article 3, section 30253 of the California Code of Regulations, Reference to section 30253 is prospective, including future changes to any incorporated provisions of federal law, as the changes take effect.			
BASED ON OCEAN PLAN OBJECTIVES FOR PROTECTION OF HUMAN HEALTH – NONCARCINOGENS					
Acrolein	µg/L	--	--	--	2.10E+04
	lbs/day	--	--	--	4.39E+03
Antimony, Total Recoverable	µg/L	--	--	--	1.15E+05
	lbs/day	--	--	--	2.39E+04
Bis(2-chloroethoxy) Methane	µg/L	--	--	--	4.21E+02
	lbs/day	--	--	--	8.77E+01
Bis(2-chloroisopropyl) Ether	µg/L	--	--	--	1.15E+05
	lbs/day	--	--	--	2.39E+04
Chlorobenzene	µg/L	--	--	--	5.45E+04
	lbs/day	--	--	--	1.14E+04
Chromium (III) , Total Recoverable[4]	µg/L	--	--	--	1.82E+07
	lbs/day	--	--	--	3.79E+06
Di-n-butyl Phthalate	µg/L	--	--	--	3.35E+05
	lbs/day	--	--	--	6.98E+04

Parameter	Unit[1,2]	Performance Goals[1,3]			
		6-Month Median	Maximum Daily	Instantaneous Maximum	30-Day Average
Dichlorobenzenes[1]	µg/L	--	--	--	4.88E+05
	lbs/day	--	--	--	1.02E+05
Diethyl Phthalate	µg/L	--	--	--	3.15E+06
	lbs/day	--	--	--	6.58E+05
Dimethyl Phthalate	µg/L	--	--	--	7.84E+07
	lbs/day	--	--	--	1.63E+07
4,6-dinitro-2-methylphenol	µg/L	--	--	--	2.10E+04
	lbs/day	--	--	--	4.39E+03
2,4-dinitrophenol	µg/L	--	--	--	3.82E+02
	lbs/day	--	--	--	7.97E+01
Ethylbenzene	µg/L	--	--	--	3.92E+05
	lbs/day	--	--	--	8.17E+04
Fluoranthene	µg/L	--	--	--	1.43E+03
	lbs/day	--	--	--	2.99E+02
Hexachlorocyclopentadiene	µg/L	--	--	--	5.54E+03
	lbs/day	--	--	--	1.16E+03
Nitrobenzene	µg/L	--	--	--	4.68E+02
	lbs/day	--	--	--	9.77E+01
Toluene	µg/L	--	--	--	8.13E+06
	lbs/day	--	--	--	1.69E+06
1,1,1-trichloroethane	µg/L	--	--	--	5.16E+07
	lbs/day	--	--	--	1.08E+07
BASED ON OCEAN PLAN OBJECTIVES FOR PROTECTION OF HUMAN HEALTH - CARCINOGENS					
Acrylonitrile	µg/L	--	--	--	9.56E+00
	lbs/day	--	--	--	1.99E+00
Aldrin	µg/L	--	--	--	2.10E-03
	lbs/day	--	--	--	4.39E-04
Benzene	µg/L	--	--	--	5.64E+02
	lbs/day	--	--	--	1.18E+02
Beryllium, Total Recoverable	µg/L	--	--	--	3.15E+00
	lbs/day	--	--	--	6.58E-01
Bis(2-chloroethyl) Ether	µg/L	--	--	--	4.30E+00
	lbs/day	--	--	--	8.97E-01
Bis(2-ethlyhexyl) Phthalate	µg/L	--	--	--	3.35E+02
	lbs/day	--	--	--	6.98E+01
Carbon Tetrachloride	µg/L	--	--	--	8.60E+01
	lbs/day	--	--	--	1.79E+01

Parameter	Unit[1,2]	Performance Goals[1,3]			
		6-Month Median	Maximum Daily	Instantaneous Maximum	30-Day Average
Chloroform	µg/L	--	--	--	1.24E+04
	lbs/day	--	--	--	2.59E+03
1,4-dichlorobenzene	µg/L	--	--	--	1.72E+03
	lbs/day	--	--	--	3.59E+02
3,3'-dichlorobenzidine	µg/L	--	--	--	7.74E-01
	lbs/day	--	--	--	1.61E-01
1,2-dichloroethane	µg/L	--	--	--	2.68E+03
	lbs/day	--	--	--	5.58E+02
1,1-dichloroethylene	µg/L	--	--	--	8.60E+01
	lbs/day	--	--	--	1.79E+01
Dichlorobromomethane	µg/L	--	--	--	5.93E+02
	lbs/day	--	--	--	1.24E+02
Dichloromethane (Methylene Chloride)	µg/L	--	--	--	4.30E+04
	lbs/day	--	--	--	8.97E+03
1,3-dichloropropene (1,3-Dichloropropylene)	µg/L	--	--	--	8.51E+02
	lbs/day	--	--	--	1.77E+02
Dieldrin	µg/L	--	--	--	3.82E-03
	lbs/day	--	--	--	7.97E-04
2,4-dinitrotoluene	µg/L	--	--	--	2.49E+02
	lbs/day	--	--	--	5.18E+01
1,2-diphenylhydrazine	µg/L	--	--	--	1.53E+01
	lbs/day	--	--	--	3.19E+00
Halomethanes[1]	µg/L	--	--	--	1.24E+04
	lbs/day	--	--	--	2.59E+03
heptachlor	µg/L	--	--	--	4.78E-03
	lbs/day	--	--	--	9.97E-04
Hexachlorobutadiene	µg/L	--	--	--	1.34E+03
	lbs/day	--	--	--	2.79E+02
Hexachloroethane	µg/L	--	--	--	2.39E+02
	lbs/day	--	--	--	4.98E+01
Isophorone	µg/L	--	--	--	6.98E+04
	lbs/day	--	--	--	1.46E+04
N-nitrosodimethylamine	µg/L	--	--	--	6.98E+04
	lbs/day	--	--	--	1.46E+04
N-nitrosodi-N-propylamine	µg/L	--	--	--	3.63E+01
	lbs/day	--	--	--	7.57E+00
N-nitrosodiphenylamine	µg/L	--	--	--	2.39E+02
	lbs/day	--	--	--	4.98E+01

Parameter	Unit[1,2]	Performance Goals[1,3]			
		6-Month Median	Maximum Daily	Instantaneous Maximum	30-Day Average
PAH[1]	µg/L	--	--	--	8.41E-01
	lbs/day	--	--	--	1.75E-01
1,1,2,2-tetrachloroethane	µg/L	--	--	--	2.20E+02
	lbs/day	--	--	--	4.58E+01
Tetrachloroethylene (Tetrachloroethene)	µg/L	--	--	--	1.91E+02
	lbs/day	--	--	--	3.99E+01
Trichloroethylene (Trichloroethene)	µg/L	--	--	--	2.58E+03
	lbs/day	--	--	--	5.38E+02
1,1,2-trichloroethane	µg/L	--	--	--	8.99E+02
	lbs/day	--	--	--	1.87E+02
2,4,6-trichlorophenol	µg/L	--	--	--	2.77E+01
	lbs/day	--	--	--	5.78E+00
Vinyl Chloride	µg/L	--	--	--	3.44E+03
	lbs/day	--	--	--	7.18E+02

1 See Attachment A for definitions of abbreviations and a glossary of common terms used in this Order.

2 The mass emission rate (MER) limit, in pounds per day, was calculated based on the following equation: MER (lb/day) = 8.34 x Q x C, where Q is the maximum allowable flow rate (in MGD) and C is the concentration (in mg/L).

3 Scientific "E" notation is used to express certain values. In scientific "E" notation, the number following the "E" indicates that position of the decimal point in the value. Negative numbers after the "E" indicate that the value is less than 1, and positive numbers after the "E" indicate that the value is greater than 1. In this notation a value of 6.1E-02 represents 6.1×10^{-2} or 0.061, 6.1E+02 represents 6.1×10^{2} or 610, and 6.1E+00 represents 6.1×10^{0} or 6.1.

4 The Discharger may, at their option, apply this performance goal as a total chromium performance goal.

5 If a Discharger can demonstrate to the satisfaction of the San Diego Water Board (subject to USEPA approval) that an analytical method is available to reliably distinguish between strongly and weakly complexed cyanide, effluent limitations for cyanide may be met by (or performance goals may be evaluated with) the combined measurement of free cyanide, simple alkali metals cyanides, and weakly complexed organometallic cyanide complexes. In order for the analytical method to be acceptable, the recovery of free cyanide from metal complexes must be comparable to that achieved by the approved method in title 40 Code of Federal Regulations (CFR) part 136, as revised May 14, 1999.

6 The water quality objectives for total chlorine residual applicable to intermittent discharges not exceeding two hours, shall be determined through the use of the following equation:

$$\log y = -0.43 (\log x) + 1.8,$$

where y = the water quality objective (in µg/l) to apply when chlorine is being discharged;

x = the duration of uninterrupted chlorine discharge in minutes.

Actual effluent limitations for total chlorine, when discharging intermittently, shall then be determined according to Implementation Procedures for Table 1 from the Ocean Plan, using a minimum probable initial dilution factor of 94.6 and a flow rate of 25 MGD.

3. Interim Effluent Limitations - Not Applicable

B. Land Discharge Specifications – Not Applicable

C. Recycling Specifications – Not Applicable

V. RECEIVING WATER LIMITATIONS

A. Surface Water Limitation

The receiving water limitations set forth below for ocean waters are based on water quality objectives contained in the Basin Plan and Ocean Plan and are a required part of this Order. The discharge of waste shall not cause or contribute to violation of these limitations in the Pacific Ocean. Compliance with these limitations shall be determined from samples collected at stations representative of the area within the waste field where initial dilution is completed.

1. **Bacterial Characteristics**

   a. Within a zone bounded by the shoreline and a distance of three nautical miles from the shoreline, including all kelp beds, the following bacterial objectives shall be maintained throughout the water column. The zone of initial dilution for the ocean outfall is excluded.

      i. 30-day Geometric Mean – The following standards are based on the geometric mean of the five most recent samples from each site:

         a) Total coliform density shall not exceed 1,000 per 100 mL;

         b) Fecal coliform density shall not exceed 200 per 100 mL; and

         c) Enterococcus density shall not exceed 35 per 100 mL.

      ii. Single Sample Maximum:

         a) Total coliform density shall not exceed 10,000 per 100 mL;

         b) Fecal coliform density shall not exceed 400 per 100 mL;

         c) Enterococcus density shall not exceed 104 per 100 mL; and

         d) Total coliform density shall not exceed 1,000 per 100 mL when the fecal coliform/total coliform ratio exceeds 0.1.

   b. The Initial Dilution Zone of wastewater outfall shall be excluded from designation as kelp beds for purposes of bacterial standards. Adventitious assemblages of kelp plants on waste discharge structures (e.g., outfall pipes and diffusers) do not constitute kelp beds for purposes of bacterial standards.

   c. At all areas where shellfish may be harvested for human consumption, as determined by the San Diego Water Board, the median total coliform density shall not exceed 70 per 100 mL throughout the water column, and not more than 10 percent of the samples shall exceed 230 per 100 mL.

2. **Physical Characteristics**

   a. Floating particulates and grease and oils shall not be visible.

   b. The discharge of waste shall not cause aesthetically undesirable discoloration of the ocean surface.

   c. Natural light shall not be significantly reduced at any point outside the initial dilution zone as a result of the discharge of waste.

d. The rate of deposition of inert solids and the characteristics of inert solids in the ocean sediments shall not be changed such that benthic communities are degraded.

3. **Chemical Characteristics**

a. The dissolved oxygen concentration shall not at any time be depressed more than 10 percent from that which occurs naturally, as the result of the discharge of oxygen demanding waste materials.

b. The pH shall not be changed at any time more than 0.2 units from that which occurs naturally.

c. The dissolved sulfide concentration of waters in and near sediments shall not be significantly increased above that present under natural conditions.

d. The concentration of substances set forth in Chapter II, Table 1 of the Ocean Plan, shall not be increased in marine sediments to levels that would degrade indigenous biota.

e. The concentration of organic materials in marine sediments shall not be increased to levels that would degrade marine life.

f. Nutrient materials shall not cause objectionable aquatic growths or degrade indigenous biota.

g. Numerical water quality objectives established in Chapter II, Table 1 of the Ocean Plan apply to all discharges within the jurisdiction of the Ocean Plan. Unless otherwise specified, all metal concentrations are expressed as total recoverable concentrations.

4. **Biological Characteristics**

a. Marine communities, including vertebrate, invertebrate, and plant species, shall not be degraded.

b. The natural taste, odor, color of fish, shellfish, or other marine resources used for human consumption shall not be altered.

c. The concentration of organic materials in fish, shellfish, or other marine resources used for human consumption shall not bioaccumulate to levels that are harmful to human health.

5. **Radioactivity**

Discharge of radioactive waste shall not degrade marine life.

B. Groundwater Limitations – Not Applicable

VI. PROVISIONS

A. Standard Provisions

1. The Discharger shall comply with all Standard Provisions included in Attachment D of this Order.

2. The Discharger shall comply with the following provisions. In the event that there is any conflict, duplication, or overlap between provisions specified by this Order, the more stringent provision shall apply.

a. The Facility shall be supervised and operated by persons possessing certificates of appropriate grade pursuant to title 23, division 3, chapter 26 of the California Code

of Regulations (CCR). The Facility shall be provided with a sufficient number of qualified personnel to operate the Facility effectively so as to achieve the required level of treatment at all times.

b. All proposed new treatment facilities and expansions of existing treatment facilities shall be completely constructed and operable prior to initiation of the discharge from the new or expanded facilities. The Discharger shall submit a certification report for each new canyon collector, treatment facility, expansion of an existing treatment facility, and design capacity re-ratings. The certification report shall be prepared by the design engineer. For design capacity re-ratings, the certification report shall be prepared by the engineer who evaluated the treatment facility design capacity. The signature and engineering license number of the engineer preparing the certification report shall be affixed to the report. If reasonable, the certification report shall be submitted prior to beginning construction.

i. The certification report shall:

a) Identify the design capacity of the treatment facility, including the daily and 30-day design capacity;

b) Certify the adequacy of each component of the treatment facility; and

c) Contain a requirement-by-requirement analysis, based on acceptable engineering practices, of the process and physical design of the facility to ensure compliance with this Order.

ii. The Discharger shall not initiate a discharge from an existing treatment facility at a daily flow rate in excess of its previously approved design capacity until:

a) The certification report is received by the San Diego Water Board;

b) The San Diego Water Board has received written notification of completion of construction (new treatment facilities and expansions only);

c) An inspection of the facility has been made by the San Diego Water Board or its designated representatives (new treatment facilities and expansions only); and

d) The San Diego Water Board has provided the Discharger with written authorization to discharge at a daily flow rate in excess of its previously approved design capacity.

c. All waste treatment, containment, and disposal facilities shall be protected against 100-year peak stream flows as defined by the San Diego County flood control agency.

d. All waste treatment, containment, and disposal facilities shall be protected against erosion, overland runoff, and other impacts resulting from a 100-year, 24-hour storm event.

e. This Order expires on July 31, 2019, after which, the terms and conditions of this permit are automatically continued pending issuance of a new permit, provided that all requirements of USEPA's NPDES regulations at 40 CFR section 122.6 and the

State's regulations at title 23, division 3, chapter 9, article 3, section 2235.4 of the CCR regarding the continuation of expired permits and waste discharge requirements are met.

f. A copy of this Order shall be posted at a prominent location at or near the treatment and disposal facilities and shall be available to operating personnel at all times.

B. Monitoring and Reporting Program (MRP) Requirements

The Discharger shall comply with the MRP, and future revisions thereto, in Attachment E of this Order.

C. Special Provisions

1. Reopener Provisions

a. This Order may be reopened for modification to include an effluent limitation if monitoring establishes that the discharge causes, has the reasonable potential to cause, or contributes to an excursion above a performance goal(s) set forth in section IV.A.2, Table 5, of this Order or as otherwise described in Ocean Plan Table 1. (40 CFR section 122.44(d)(1))

b. This Order may be reopened for modification of the monitoring and reporting requirements and/or special studies requirements, at the discretion of the San Diego Water Board. Such modification(s) may include, but is (are) not limited to, revision(s) (i) to implement recommendations from Southern California Coastal Water Research Project (SCCWRP), (ii) to develop, refine, implement, and/or coordinate a regional monitoring program, (iii) to develop and implement improved monitoring and assessment programs in keeping with San Diego Water Board Resolution No. R9-2012-0069, *Resolution in Support of a Regional Monitoring Framework*, and/or (iv) to add provisions to require the Discharger to evaluate and provide information on cost and values of the monitoring and reporting program.

c. This Order may be modified, revoked and reissued, or terminated for cause including, but not limited to, the following:

i. Violation of any terms or conditions of this Order. (Water Code section 13381(a))

ii. Obtaining this Order by misrepresentation or failure to disclose fully all relevant facts. (Water Code section 13381(b))

iii. A change in any condition that requires either a temporary or permanent reduction or elimination of the permitted discharge. (Water Code section 13381(c))

d. The filing of a request by the Discharger for modifications, revocation and reissuance, or termination of this Order does not stay any condition of this Order. Notification by the Discharger of planned operational or facility changes or anticipated noncompliance with this Order does not stay any condition of this Order. (40 CFR section 122.41(f))

e. If any applicable toxic effluent standard or prohibition (including any schedule of compliance specified in such effluent standard or prohibition) is promulgated under section 307(a) of the CWA for a toxic pollutant and that standard or prohibition is more stringent than any limitation on the pollutant in this Order, the San Diego Water Board may institute proceedings under these regulations to modify or revoke

and reissue the Order to conform to the toxic effluent standard or prohibition. (40 CFR section 122.4(b)(1))

f. This Order may be reopened and modified, in accordance with the provisions set forth in 40 CFR parts 122 and 124.

g. This Order may be reopened and modified to revise effluent limitations as a result of future Basin Plan Amendments, or the adoption of a total maximum daily load (TMDL) for the receiving water. (40 CFR section 122.62(a)(2))

h. This Order may be reopened upon submission by the Discharger of adequate information, as determined by the San Diego Water Board, to provide for dilution credits or a mixing zone, as may be appropriate. (40 CFR section 122.62(a)(2))

i. This Order may also be reopened and modified, revoked and, reissued or terminated in accordance with the provisions of 40 CFR sections 122.44, 122.62 to 122.64, and 125.62. Causes for taking such actions include, but are not limited to, failure to comply with any condition of this Order and permit, and endangerment to human health or the environment resulting from the permitted activity.

2. Special Studies, Technical Reports and Additional Monitoring Requirements

a. **Spill and Transboundary Wastewater Flow Event Prevention and Response Plan**.

i. **Spill and Transboundary Wastewater Flow Event Types.** For purposes of section VI.C.2, spill and transboundary wastewater flow event types are defined and categorized as set forth below. Event types do not include waste discharges to the Pacific Ocean at SBOO Discharge Point No. 001 or discharges of waste from the Facilities specifically regulated by separate waste discharge requirements or an NPDES permit.

a) **Spill from the Facilities (Facilities Spill Event).** A discharge of treated or untreated wastewater or other material to the environment that occurs from the Discharger's Facilities, including, but not limited to, the entire wastewater conveyance, storage, treatment, and disposal system (wastewater system) that is owned and operated by the Discharger. The wastewater system includes all devices and system components used such as pipes, pump stations, force mains, Junction Box 1, Junction Box 2, the five canyon collector systems, the treatment works, SBLO, and SBOO.

b) **Transboundary Wastewater Flow Past the Canyon Collector System (Flow Event Type A).** A dry weather transboundary treated or untreated wastewater or other flow through a conveyance structure owned and operated by the United States Government into Smuggler Gulch, Goat Canyon, Canyon del Sol, Stewart's Drain, or Silva Drain and not diverted into the canyon collector system for treatment at the Facility.

c) **Transboundary Wastewater Flow Event or Other Spill/Wastewater Flow Event in Mexico (Flow Event Type B).** A dry weather spill or dry weather transboundary wastewater or other flow (not categorized in other Event Types above) that creates, or threatens to create, pollution or nuisance conditions in waters of the United States and/or State including the Tijuana River (main channel), Yogurt Canyon drainage, other unnamed

drainages and nearby coastal marine waters. These spills or transboundary flows include, but are not limited to the following:

1) A dry weather transboundary treated or untreated wastewater flow in waters of the Tijuana River (main channel) as described in Commitment No. 16 of IBWC Minute No. 283 (*Conceptual Plan for the International Solution to the Border Sanitation Problem in San Diego, California/Tijuana, Baja California, July 2, 1990*).

2) A dry weather transboundary treated or untreated wastewater flow through a conveyance structure owned and operated by the United States Government into Yogurt Canyon.

3) Spills or wastewater flows occurring in Mexico that the Discharger has knowledge of.

ii. **Development and Submittal**. The Discharger shall prepare and submit a *Spill and Transboundary Wastewater Flow Prevention and Response Plan* (Prevention/Response Plan) to the San Diego Water Board, via the State Water Board's California Integrated Water Quality System (CIWQS) Program Web site, no later than 180 days after the adoption of this Order. The Prevention/Response Plan shall be developed in consultation with the Comisión Internacional de Limites y Aguas (CILA, the Mexican Section of the IBWC), the San Diego Water Board, the County of San Diego Department of Environmental Health (DEH), and other interested stakeholders. At a minimum, the Prevention/Response Plan shall address the three types of events identified above in section VI.C.2.a.i of this Order and shall include the following elements:

a) **Goal.** The goal of the Prevention/Response Plan shall be described and consistent with the following criteria:

1) Reduce, eliminate and prevent the recurrence of spills and transboundary wastewater flows;

2) Protect public health and safety; and

3) Prevent adverse impacts to the environment from spills and transboundary wastewater flows, including but not limited to, adverse impacts to waters of the United States and/or State.

b) **Desired Outcomes.** The Prevention/Response Plan shall be consistent with the following desired outcomes:

1) Prompt notification and reporting of spills and transboundary wastewater flows to appropriate regulatory agencies, municipalities, and other potentially affected entities is ensured;

2) Effective measures are identified, documented and implemented to prevent, reduce, and eliminate spills and transboundary wastewater flows;

3) Compliance with the requirements of this Order is achieved and maintained;

4) Effective remedial measures are implemented to 1) control or limit the spill and/or transboundary wastewater flow volume, 2) terminate the spill and/or transboundary wastewater flow, and 3) recover as much of the spill and/or transboundary wastewater flow volume as possible for proper disposal, including any wash down water; and

5) A framework for binational actions and cooperation in achieving the goals and desired outcomes of the Prevention/Response Plan is established and followed by the Discharger and CILA and the following agencies to the extent that these agencies are willing and able to participate, Secretaría de Protección al Ambiente (SPA), Comisión Estatal de Servicios Públicos de Tijuana (CESPT), Procuraduría Federal de Protección al Ambiente (PROFEPA), Comisión Nacional del Agua (CONAGUA), and the City of Tijuana's Secretaría de Desarrollo Urbano y Ecología (SDUE).

c) **Roles and Responsibilities.** The Prevention/Response Prevention/Response Plan shall:

1) Identify the duly authorized individual(s) or position(s) having overall responsibility for the development and implementation of the Prevention/Response Plan on behalf of the Discharger as described in Attachment D of this Order, Special Provisions, section V.B;

2) Identify the names of all key individuals, associated position titles, e-mail addresses and telephone numbers, including management, administrative, contractor and maintenance positions, responsible for implementing specific measures described in the Prevention/Response Plan, on behalf of the Discharger; *and*

3) Provide a complete description of the roles and responsibilities, and lines of authority for implementation of the Prevention/Response Plan with respect to the Discharger, including organization chart(s) or similar document(s).

4) Provide a complete description of the roles and responsibilities, and lines of authority for implementation of the Prevention/Response Plan with respect to CILA, SPA, CESPT, PROFEPA, CONAGUA, and SDUE, including organization chart(s) or similar document(s) to the extent that they are available. The Discharger shall request in writing this information to assist the Discharger in implementing the Prevention/Response Plan. The Discharger shall include a copy of the request and CILA's response to the request in the Prevention/Response Plan. If CILA refuses or does not confirm within one month, the Discharger shall communicate the same to the San Diego Water Board in writing in a timely manner.

d) **Communication and Coordination with Mexico.** The Prevention/Response Plan shall document the framework and procedures for coordination between the Discharger, CILA, SPA, CESPT, the San Diego Water Board, and interested parties through regular meetings and written or oral communication to:

1) Develop procedures for reducing, eliminating, and preventing recurrence of transboundary wastewater flows resulting from an emergency or unanticipated outages of wastewater infrastructure on either side of the international border;

2) Develop binational emergency response and notification procedures for loss of wastewater infrastructure capacity on either side of the international border;

3) Review existing plans, specifications and reports of key wastewater infrastructure on both sides of the international border;

4) Assist CILA and local agencies in Mexico, as requested by these entities through IBWC, in preventing, reducing, terminating, and recovering transboundary wastewater flows;

5) Provide a framework for binational actions and cooperation in achieving the goals and desired outcomes of the Prevention/Response Plan; and

6) Optimize use of available wastewater infrastructure capacity on both sides of the international border. This topic shall include, but is not limited to, use of an emergency connection to the City of San Diego sewage collection system, increases in available sewage collection and treatment capacity in Tijuana, and increase in wastewater flow diversion to the IWTP.

e) **Inspection and Preventative Maintenance Program.** The Prevention/Response Plan shall provide a program for routine inspection and preventative maintenance of the entire wastewater system that is owned and operated by the Discharger including backup power and electrical systems. The inspection and preventative maintenance program shall include the following components:

1) **Map, Flow Diagrams, and Design Capacity Documentation.** The Prevention/Response Plan shall provide an accurate map and flow diagram, and the design capacity for each key component of the entire Discharger's wastewater system as well as the main wastewater conveyance and treatment system in Mexico. The information shall address key pipes, force mains, pump stations, treatment plant capacities, and all discharge point(s).

2) **Inspection and Preventative Maintenance Program.** The Prevention/Response Plan shall provide a description of the routine inspection and preventative maintenance program for the Discharger's

wastewater system. The description shall include schedules, protocols, documentation procedures, and associated activities for inspection, preventative maintenance, and cleaning. The documentation procedures shall include the system used to document the inspection and preventive maintenance activities, such as work orders. The Prevention/Response Plan shall include exercising and testing of all key systems and components to verify adequate operation of the system and associated backup alarms.

Each canyon collector shall be inspected daily. The Prevention/Response Plan shall also provide a description of the specific circumstances, mechanisms, and frequency of occurrence whereby the hydraulic capacity of the canyon collector systems is reduced below its design capacity from stoppage, blockage, debris obstructions, vandalism or other causes that impact or limit the flow of wastewater into and through the canyon collector systems. The Prevention/Response Plan shall identify the best practices and procedures employed by the Discharger to reduce, prevent, or eliminate the severity and impact of these mechanisms and to restore the system's functional capacity to handle transboundary wastewater flows at the design capacity flow rate as quickly as possible. These practices and procedures shall also address the steps taken or planned to ensure adequate clearing and removal of accumulated sand/silt and blockages and correction of all capacity deficiencies in the canyon collector systems within 96 hours following a storm event of 0.1 inches or greater (i.e. 24 hours after wet weather, as defined in Attachment A).

3) **Replacement Components.** The Prevention/Response Plan shall also describe practices for identifying key replacement components and maintaining an adequate inventory of critical replacement components.

4) **Log Maintenance and Retention of Records.** The Prevention/Response Plan shall provide for maintaining a log of all pertinent inspection, cleaning, maintenance and repair records for at least five (5) years for use in identifying and prioritizing system deficiencies in order to devise a corrective action strategy to prevent future spills.

f) **Rehabilitation and Replacement.** The Prevention/Response Plan shall describe a rehabilitation and replacement program to detect, identify, and address any structural deficiencies, or other system devices or components that have caused or are likely to cause spills from the Discharger's wastewater system. Structural deficiencies include, but are not limited to, major pipe breaks and cracks, inadequate pipe slopes, internal corrosion areas, areas of significant root intrusion, and inadequate hydraulic capacity. The rehabilitation and replacement program shall provide for identification, ranking and prioritizing of system deficiencies and implementation of short-term and long-term rehabilitation or replacement actions to address each identified deficiency. Rehabilitation and replacement activities should focus on infrastructure that is older and at risk or prone to more frequent blockage

due to sediment or debris. The Prevention/Response Plan shall also describe a capital improvement program which manages and preserves infrastructure assets, identifies and ranks infrastructure rehabilitation and replacement capital projects, provides a planning and implementation schedule, and identifies options for obtaining the funding needed to implement the program.

g) **Training**. The Prevention/Response Plan shall describe a program for providing training to ensure that the Discharger's employees, contractors, and other representatives are adequately trained and possess adequate knowledge, skills and abilities to implement the Prevention/Response Plan.

h) **Facilities Spill and Transboundary Wastewater Spill Containment and Cleanup**. This section of the Prevention/Response Plan shall apply to Facilities Spill Event and Flow Event Type A.

The Prevention/Response Plan shall describe guidelines and procedures for taking all feasible steps and necessary remedial actions to 1) control or limit the spill and/or transboundary wastewater flow volume, 2) terminate the spill and/or transboundary wastewater flow, and 3) recover as much of the spill and/or transboundary wastewater flow volume as possible for proper disposal, including any wash down water. The Prevention/Response Plan shall incorporate the following components:

1) **Investigation and Assessment.** The Prevention/Response Plan shall describe procedures for spill and/or transboundary wastewater flow investigation and assessment including volume estimation, adequate monitoring to determine the nature and impact of the event, identification of receiving waters impacted, calls for additional backup support, and notification of appropriate agencies as required under section VI.C.2.d of this Order.

2) **Containment.** Procedures for containment of the spill and/or transboundary wastewater flow volume including but not limited *to* the following actions:

i) Use of sand bags or containment barriers;

ii) Containment in downstream storm drains and plugging downstream storm drain outlets to capture the spill and/or transboundary wastewater flow if possible; and

iii) Excavation as necessary to establish containment of spill and/or transboundary wastewater flow.

3) **Cleanup.** Procedures for cleanup of the spill and/or transboundary wastewater flow including but not limited to the following actions:

i) Collection of solid and liquid material and other debris;

ii) Vacuum truck recovery of wastewater or polluted water and wash down water;

iii) Cleanup of debris within the affected area(s); and

iv) Clean-up of impacted storm drains in accordance with NPDES storm water permit.

i) **Notifications and Reporting.** This section of the Prevention/Response Plan shall apply to Facilities Spill Event and Flow Event Type A. The Prevention/Response Plan shall describe procedures for prompt notification and reporting of these spills to appropriate parties as described in section VI.C.2.d of this Order. The Prevention/Response Plan shall provide for maintenance of a regularly updated notification and reporting contact list (emails and phone numbers) and adequate public notification to protect the public from exposure to spills and/or transboundary wastewater flows. Written notifications and reports should be provided to appropriate regulatory agencies, municipalities, and other potentially affected entities to the extent required by this Order, other permits and licenses, state and federal laws, local ordinances or as otherwise described in the Prevention/Response Plan. These organizations shall include, but are not be limited to:

1) California Governor's Office of Emergency Services (Cal OES);

2) DEH;

3) San Diego Water Board;

4) California Department of Fish and Wildlife;

5) U.S. Fish and Wildlife Service;

6) City of Imperial Beach;

7) City of San Diego;

8) USEPA

9) Local water agencies if a water supply has been affected;

10) Interested non-governmental organizations (NGOs); and

11) Other interested parties.

j) **Documentation.** The Prevention/Response Plan shall include procedures for documentation of each event as required under section VI.C.2.d of this Order including, but not limited to, a description of the spill event and its cause; exact dates and times for when the event started, when the Discharger responded, when the event stopped, when containment and cleanup occurred, the volume recovered, the volume released to the

environment, notifications made, and the steps taken or planned to mitigate and prevent recurrence of the event.

k) **Notifications and Reporting of Transboundary Wastewater Flows or Other Spills within Mexico**. This section of the Prevention/Response Plan shall apply to Flow Event Type B. The Prevention/Response Plan shall describe procedures for notification and reporting of Flow Event Type B. These events should be reported within 24 hours of the time the Discharger becomes aware of the event. The procedures shall provide for notification and reporting of such events to governmental agencies, municipalities, and other organizations as described in section VI.C.2.a.ii.i) above. (The Discharger is not responsible for the investigation, assessment, containment, cleanup, or documentation of such events, but only for the reporting of such events for which the Discharger becomes aware.)

iii. **Prevention/Response Plan Implementation.** Upon receipt, the San Diego Water Board will issue a public notice and release the Prevention/Response Plan for public review and comment for a minimum of 30 days. The Discharger must consider revisions to the Prevention/Response Plan based on written comments received during the specified comment period. The Discharger must submit a revised Prevention/Response Plan, with responses to written comments received, to the San Diego Water Board no later than 60 days after the close of the comment period. The Discharger shall commence with implementation of the Prevention/Response Plan immediately upon submission of the revised Prevention/Response Plan unless otherwise directed in writing by the San Diego Water Board Executive Officer.

a) **Prevention/Response Plan Amendment.** The Discharger shall conduct regular review and assessment of the Prevention/Response Plan to identify improvements and modify it as necessary to reduce, eliminate, and prevent the recurrence of spills and/or transboundary wastewater flows. The Discharger shall keep the Prevention/Response Plan in an up-to-date condition and shall amend the Prevention/Response Plan whenever there is a change (e.g., in the design, construction, operation, or maintenance of the Facilities) which materially affects the potential for spill and/or transboundary wastewater flow events; or which materially affects the response required for each event. The Discharger shall include any modifications as an amendment to the Prevention/Response Plan submittal in CIWQS within 30 days of making the amendment.

b) **Prevention/Response Plan Posting.** A copy of the most current Prevention/Response Plan shall be posted at a prominent location at or near the Facility and shall be readily available to Discharger's employees, contractors, and other representatives at all times. The Discharger shall also post a publicly available internet accessible copy of the most current Prevention/Response Plan on the Discharger's website.

b. **Sharing Transboundary Wastewater Flow Information with Mexico**

i. The Discharger shall meet with CILA to share the approved Prevention/Response Plan and answer any questions about its content within one year of the adoption of this Order. The Discharger shall request in writing that CILA share the approved Prevention/Response Plan with SPA, CESPT, PROFEPA, CONAGUA, and SDUE. If CILA refuses or does not confirm within one month, the Discharger shall communicate the same to the San Diego Water Board in writing in a timely manner. A copy of the written request to CILA and written confirmation from CILA shall be included as an amendment to the Prevention/Response Plan submittal in CIWQS.

ii. The Discharger shall conduct binational technical committee meetings, with simultaneous translation services, if needed, on transboundary wastewater flow prevention and response in the international border region periodically but no less than two times per year. The Discharger shall invite CILA, the San Diego Water Board, and USEPA to attend. In consultation with CILA, the Discharger shall consider inviting additional stakeholders including, but not limited to, the County of San Diego, the City of San Diego, the City of Imperial Beach, California State Parks, U.S. Fish and Wildlife, California Department of Fish and Wildlife, SPA, CESPT, PROFEPA, CONAGUA, SDUE, and NGOs, such as Tijuana-based Tijuana Calidad de Vida and Proyecto Fronterizo de Educación Ambiental, WILDCOAST, Surfrider Foundation San Diego, and San Diego Coastkeeper. The Discharger shall prepare an agenda with input from invited stakeholders and shall prepare a meeting summary after the meeting and distribute it to all invited stakeholders. The binational technical committee meetings for the transboundary wastewater flows can be combined with the binational technical committee meetings for the pretreatment required in section VI.C.5.b.i. The Discharger shall promote discussion of binational interests, including but not limited to the following:

a) Development and improvement of binational prevention, response, and notification procedures of spills and/or transboundary wastewater flows due to loss of wastewater infrastructure capacity on either side of the international border or other problems;

b) Review of existing and proposed plans, specifications, and reports for key wastewater infrastructure on both sides of the international border;

c) Assist CILA and local agencies in Mexico, as requested by these entities through IBWC, in identifying, preventing, reducing, terminating, and recovering spills and/or transboundary wastewater flows;

d) Optimizing use of available wastewater infrastructure capacity on both sides of the international border to reduce, eliminate, and prevent the recurrence of spills and/or transboundary wastewater flows. This topic shall include, but is not limited to, use of an emergency connection to the City of San Diego sewage collection system, increases in available sewage collection and treatment capacity in Tijuana, and increase in wastewater flow diversion to the IWTP;

e) Share and discuss the current version of the Prevention/Response Plan;

f) Share and discuss Tijuana River, transboundary canyons, and coastal water quality data, and discuss possible sources of contamination; *and*

g) Development and improvement of binational actions and cooperation in achieving the goals and desired outcomes of the Prevention/Response Plan.

iii. In the event Mexico fails to prevent a discharge of treated or untreated wastewaters into waters of the Tijuana River that cross the international boundary as described in Commitment No. 16 of IBWC Minute No. 283, the Discharger's Commissioner or designee shall, within 24 hours of becoming aware of the event, notify the Commissioner of CILA or designee in writing that such a discharge has occurred and request that special measures be taken to immediately stop such discharges and make any necessary repairs in accordance with Commitment No. 16 of IBWC Minute No. 283. If CILA refuses or does not confirm within one day, the Discharger will communicate the same in writing to the San Diego Water Board in a timely manner.

iv. The Discharger shall share the monthly self-monitoring report (SMR) required in Attachment E of this Order with CILA on or before the due date for submittal to the San Diego Water Board. The monthly SMR shall include the monthly transboundary wastewater flow report as required in section VII.B.4 of Attachment E of this Order.

v. The Discharger shall prepare technical presentations which clearly summarize transboundary wastewater flows and compares the flows with the flows occurring during the previous year for the same time periods and year to date. The presentations shall include the information listed in section VI.B.4 of Attachment E of this Order, as well as any other information on the circumstances and impacts of the transboundary wastewater flows and ways to improve the prevention of, and response to, transboundary wastewater flows. The presentation may be combined with the pretreatment technical presentation required in section VI.C.5.b.iv of this Order.

a) The Discharger shall meet with CILA each quarter to share the approved presentations and answer any questions about its content. If no transboundary flows occurred during any given quarter, the Discharger is not required to prepare a technical presentation for that quarter. If there is no technical presentation for that quarter, the Discharger is not required to meet with CILA for that quarter.

b) The Discharger shall request in writing that CILA share the approved presentations at venues hosted by the regulated community at least once, if appropriate venues are available. If CILA refuses or fails to confirm within one month, the Discharger shall communicate the same to the San Diego Water Board in a timely manner.

c) The Discharger shall request in writing that CILA share the approved presentations with SPA and CESPT. If CILA refuses or does not confirm

within one month, the Discharger will communicate the same to the San Diego Water Board in a timely manner.

d) The presentations shall be processed in accordance with the following schedule unless the Discharger is otherwise directed in writing by the San Diego Water Board:

Table 6. Sharing Transboundary Wastewater Information with Mexico

Quarterly Presentation Period[1]	Presentations Due to the San Diego Water Board for approval	Discharger Share Presentations with CILA	Discharger Request for CILA to Share Presentations with CESPT and SPA
January 1 through March 31	May 15	June 1	June 15
April 1 through June 30	August 15	September 1	September 15
July 1 through September 30	November 15	December 1	December 15
October 1 through December 31	February 15	March 1	March 15

1 If no transboundary flows occurred during any given quarter, the Discharger is not required to prepare a technical presentation for that quarter. If there is no technical presentation for that quarter, the Discharger is not required to meet with CILA for that quarter.

vi. The Discharger may, for reasons of international protocol, submit the agenda, meeting summary, monthly SMR, technical presentation, and other documents described in section VI.C.2.b to CILA in English. If the documents are submitted in English, the Discharger shall request in writing that CILA translate the documents into Spanish prior to distribution to the stakeholders in Mexico. If CILA does not translate the documents as requested, the Discharger shall do the translation.

c. **Other Transboundary Wastewater Flow Requirements**

i. The Discharger shall work through CILA to coordinate with SPA and/or CESPT in preventing, reducing, terminating, and recovering transboundary wastewater flows. Efforts to achieve this goal shall include, but are not limited to, improved communication between the Discharger, CILA, SPA, and CESPT; and providing training, available funding, and other assistance to SPA and CESPT.

ii. Annually, the Discharger shall request in writing from CILA the information listed below for the previous calendar year. If CILA refuses or fails to provide this information by March 1, the Discharger shall communicate the same to the San Diego Water Board in writing in a timely manner.

a) A brief description of any programs CILA and local agencies in Mexico implements to prevent, reduce, terminate, and recover transboundary wastewater flows;

b) A brief description of any significant changes in transboundary wastewater flow prevention and response activities which differ from the previous year including, but not limited to, changes concerning administrative structures, monitoring programs or monitoring frequencies, legal authority, enforcement policies, funding levels, or staffing levels;

c) A summary of the annual transboundary wastewater flow prevention and response budget, including the cost of program functions and equipment purchases; and

d) A summary of all activities undertaken to educate the public on how to prevent wastewater discharges (e.g. reducing discharges of fats, oils, and grease into the sewage collection system).

d. **Spill and Transboundary Wastewater Flow Event Notification and Reporting Requirements**

The Discharger shall report spills and transboundary wastewater flows in accordance with the following procedures for Facilities Spill Events and Flow Events Type A. The San Diego Water Board requests that the Discharger apply this section of the Prevention/Response Plan to Flow Events Type B.

i. Facilities Spill Events and Flow Events Types A and B, as defined in section VI.C.2.a.i above, shall be categorized for notification and reporting purposes as follows:

a) Category 1 include discharges that contain wastewater of any volume that: 1) Reach surface water and/or reach a drainage channel tributary to a surface water; or 2) Reach a Municipal Separate Storm Sewer System (MS4), and are not fully captured and returned to the Facilities or not otherwise captured and disposed of properly. Any volume not recovered from the MS4 is considered to have reached surface water unless the MS4 discharges to a dedicated storm water or groundwater infiltration basin (e.g., infiltration pit, percolation pond).

b) Category 2 includes discharges that contain wastewater of 1,000 gallons or greater that do not reach surface water, a drainage channel, or a MS4.

c) Category 3 includes all other discharges that contain wastewater.

d) Category 4 includes discharges of hazardous substances.

e) Category 5 includes discharges of oil or petroleum products.

f) Category 6 includes discharges of other materials related to the facilities that may endanger health or the environment.

ii. Within two hours of becoming aware of any Category 1 Event greater than or equal to 1,000 gallons discharged to surface water or a spill or flow to a location where it probably will be discharged to surface water, the Discharger shall notify the Cal OES and obtain a notification control number. The Discharger shall

provide the information requested by Cal OES before receiving a control number. Spill/flow information requested by Cal OES may include:

a) Name of person notifying Cal OES and direct return phone number.

b) Estimated spill/flow volume (gallons).

c) If ongoing, estimated spill/flow rate (gallons per minute).

d) Spill/flow incident description including a brief narrative, on-scene point of contact for additional information (name and cell phone number); date and time Discharger became aware of the spill/flow; location of discharge; cause of the spill/flow (if known).

e) Indication of whether the spill/flow has been contained.

f) Indication of whether surface water is impacted.

g) Name of surface water impacted by the spill/flow, if applicable.

h) Indication of whether a drinking water supply is or may be impacted by the spill/flow.

i) Any other known spill/flow impacts.

j) Spill/flow incident location (address, city, state, and zip code).

Following the initial notification to Cal OES and until such time that the Discharger submits a certified report, the Discharger shall provide updates to Cal OES regarding substantial changes to the estimated volume of untreated or partially treated wastewater discharged and any substantial change(s) to known impact(s).

iii. For Category 1 and 2 Events, the Discharger shall submit a preliminary report within three business days of becoming aware of the spill/flow by email to the San Diego Water Board (RB9Spill_Report@waterboards.ca.gov), DEH, local municipalities, and other interested parties. At a minimum, the following mandatory information shall be included in the preliminary report:

a) Spill/flow contact information. (Name and telephone number of the Discharger contact person who can answer specific questions about the spill/flow being reported).

b) Spill/flow location name.

c) Global Positioning System (GPS) coordinates for the spill/flow location. If a single spill event results in multiple appearance points, provide GPS coordinates for each appearance point.

d) Whether or not the spill/flow reached surface water, a drainage channel, or entered and was discharged from a drainage structure.

e) Whether or not the spill/flow reached a MS4. If known, provide the name of the jurisdiction that owns or operates the MS4 and estimate the spill/flow volume that may have entered the MS4.

f) Whether or not the total spill/flow volume that reached a MS4 was fully recovered. If not, estimate the volume that was recovered from the MS4 (if applicable).

g) Estimate of the spill/flow volume, inclusive of all discharge point(s).

h) Estimate of the spill/flow volume that reached surface water, a drainage channel, or was not recovered from an MS4. If known, provide the name of the surface water body, drainage channel, or drainage structure.

i) Estimate of the spill/flow volume recovered from all sources and media (if applicable).

j) Number of spill/flow appearance point(s).

k) Description and location of spill/flow appearance point(s). If a single sewage collection system failure results in multiple spill appearance points, each appearance point must be described.

l) Spill/flow start date and time.

m) Date and time the Discharger was notified of, or self-discovered, the spill/flow.

n) Estimated operator arrival time.

o) Spill/flow end date and time or expected end date and time.

p) Date and time when cleanup was completed (if applicable);

q) Probable cause of the spill/flow (if known)

r) For spills/flows greater than or equal to 1,000 gallons, the date and time Cal OES was called.

s) For spills/flows greater than or equal to 1,000 gallons, the Cal OES control number.

iv. For Category 1 and 2 Events, the Discharger shall submit a certified report within 15 calendar days of spill/flow end date by email to the San Diego Water Board (RB9Spill_Report@waterboards.ca.gov), DEH, local municipalities, and interested parties. The report shall be signed and certified as required in Attachment D, section V.B At a minimum, the following mandatory information shall be reported for the certified report, in addition to all fields in subsection iii above:

a) Description of spill/flow destination(s).

b) Spill/flow end date and time.

c) Spill/flow cause(s) (e.g. pipe blockage; fats, oil, and grease; root intrusion; pipe break; pump station failure; power outage; component failure; inadequate hydraulic capacity; inflow and infiltration; or vandalism).

d) Spill/flow failure point (pump station, junction point, etc.).

e) Whether or not the spill/flow was associated with a storm event.

f) Description of spill/flow corrective actions, including steps planned or taken to reduce, eliminate, and prevent reoccurrence of the spill/flow; and a schedule of major milestones for those steps.

g) Description of spill/flow response activities.

h) Spill/flow response completion date.

i) Whether or not there is an ongoing investigation, the reasons for the investigation, and the expected date of completion.

j) Whether or not health warnings were posted as a result of the spill/flow.

k) Name of beach(es) closed and/or impacted.

l) Name of surface water(s) impacted.

m) Location and number of water quality samples collected or reason why no samples collected.

n) Parameters for which the water quality samples (if any) were analyzed.

o) Regulatory agencies that received sample results (if any).

p) Description of methodology(ies) and data relied upon for estimations of the spill/flow volume and amount recovered.

v. For Category 4 Events, as soon as (A) the Discharger has knowledge of the discharge, (B) notification is possible, and (C) notification can be provided without substantially impeding cleanup or other emergency measures, the Discharger shall immediately notify the Cal OES of the discharge in accordance with the spill reporting provision of the state toxic disaster contingency plan adopted pursuant to article 3.7 (commencing with section 8574.16) of chapter 7 of division 1 of title 2 of the Government Code. (Water Code section 13271)

vi. For Category 5 Events, as soon as (1) the Discharger has knowledge of the discharge, (2) notification is possible, and (3) notification can be provided without substantially impeding cleanup or other emergency measures, the Discharger shall immediately notify the Office of Emergency Services of the discharge in accordance with the spill reporting provision of the California oil spill contingency plan adopted pursuant to article 3.5 (commencing with section 8574.1) of chapter 7 of division 1 of title 2 of the Government Code. This section

shall not apply to spills of oil into marine waters as defined in Subdivision (f) of section 8670.3 of the Government Code. (Water Code section 13272)

vii. For Category 6 Events, the Discharger shall notify the San Diego Water Board (RB9Spill_Report@waterboards.ca.gov), DEH, local municipalities, and interested parties within 24 hours of becoming aware of the discharge.

viii. For all Facilities Spill Events, the Discharger shall include a detailed summary of spills in the monthly self-monitoring report for the month in which the spill occurred, as required in section VI.A of Attachment E of this Order.

ix. The spill/flow reporting requirements contained in this Order do not relieve the Discharger of responsibilities to report spills/flows to other agencies, such as the Cal OES and DEH.

e. **Toxicity Reduction Evaluation (TRE)**

i. **TRE Workplan Development and Submittal.** The Discharger shall develop and submit a TRE workplan to the San Diego Water Board, via the State Water Board's CIWQS Program Web site, within 180 days of the adoption of this Order. The TRE workplan shall incorporate TRE procedures established in available USEPA guidance documents[2], including, but not limited to, the following information:

a) Criteria for determining that the discharge consistently exceeds a toxicity effluent limitation;

b) Roles and responsibilities of the team conducting the TRE;

c) A description of reasonable anticipated actions to be undertaken by the Discharger to investigate, identify and correct the causes of toxicity;

d) Provisions and criteria for implementation of a Toxicity Identification Evaluation (TIE), as necessary, based upon the magnitude and persistence of toxicity effluent limitation exceedances;

e) Provisions for data evaluation and interpretation;

f) Provision for follow-up actions and communications, including communications with CILA, SPA, PROFEPA, and CESPT, to reduce toxicity in instances where the probable cause of the toxicity effluent limitation exceedances is attributable to sources in Mexico; and

g) Provisions for development of a schedule for completion of all activities and submission of a final report within 30 days of completion of the TRE.

[2] See (a) TRE Guidance for Municipal Wastewater Treatment Plants (EPA 833-B-99-002, 1999); (b) Generalized Methodology for Conducting Industrial Toxicity Reduction Evaluations (EPA/600/2-88/070); Toxicity Identification Evaluation, Phase I (EPA/600/6-91/005F); (c) Methods for Aquatic Toxicity Identification Evaluations, Phase II (EPA/600/R-92/080); (d) Methods for Aquatic Toxicity Identification Evaluations, Phase III (EPA/600/R-92/081); and (e) Marine Toxicity Identification Evaluation (TIE): Phase I Guidance Document (EPA/600/R-96-054,1996).

ii. **TRE Workplan Approval and Implementation.** The Discharger shall implement the TRE Workplan (60) days after submission unless otherwise directed in writing to modify it by the San Diego Water Board. The Discharger shall post and maintain an up-to-date copy of the TRE Workplan on the Discharger's website.

iii. **Requirement to Conduct TRE.** If the effluent limitation for acute or chronic toxicity is exceeded in any one test, the Discharger shall conduct a TRE if the toxicity is exceeded in any of the next six (6) succeeding tests performed at 14-day intervals and notify the San Diego Water Board. After the acute or chronic toxicity exceedance, the Discharger shall continue to conduct the routine weekly monitoring for both acute and chronic toxicity as required in Attachment E of this Order.

The TRE shall be conducted in accordance with the approved TRE workplan and available USEPA guidance documents[3]. Within 30 days of completion of the TRE, the Discharger shall submit a TRE Final Report on the results of the TRE to the San Diego Water Board. The TRE Final Report shall include the following:

a) A description of the probable source and cause of the toxicity effluent limitation exceedances (if known);

b) A summary of the findings including a tabulation, evaluation, and interpretation of the data generated;

c) Copies of any written request to CILA for assistance and any responses received;

d) A list of corrective actions taken or planned by the Discharger and/or CILA to reduce toxicity so that the Discharger can achieve consistent compliance with the toxicity effluent limitation of this Order and prevent recurrence of exceedances of the limitation; and

e) If the exceedances of the toxicity effluent limitation have not been corrected, the anticipated time it is expected to continue and a time schedule for the steps planned to reduce, eliminate, and prevent recurrence of the exceedances.

The Discharger shall implement any planned corrective actions assigned to the Discharger in the TRE Final Report in accordance with the specified time schedule, unless otherwise directed in writing by the San Diego Water Board. The corrective actions and time schedule shall be modified at the direction of the San Diego Water Board.

iv. **Sharing TRE Information with Mexico**

a) ***TRE Workplan*.** Sixty days after submitting the TRE Workplan, or as otherwise directed in writing by the San Diego Water Board, the Discharger shall a) provide a copy of the approved TRE Workplan to CILA; and b) meet

[3] Ibid

with CILA to answer any questions about its content. The Discharger shall request in writing that CILA share the approved TRE Workplan with SPA and CESPT and shall provide a copy of the request to the San Diego Water Board. If CILA refuses or does not confirm within one month, the Discharger shall communicate the same to the San Diego Water Board in writing in a timely manner.

b) ***TRE Final Report*.** If the TRE Final Report, described in section VI.C.2.e.iii of this Order, determines that the toxicity effluent limitation exceedances were, or likely were, attributable to the introduction of pollutants into the Facility from Mexico, then the Discharger shall provide a copy of the TRE Final Report to CILA within 30 days after completion of the TRE Final Report. The TRE Final Report shall be provided to CILA. The Discharger also shall meet with CILA and answer any questions about the content of the TRE Final Report. The Discharger shall request in writing that CILA share the TRE Final Report with SPA and CESPT and request their assistance in addressing the probable sources and causes of the toxicity effluent limitation exceedances. The Discharger shall provide a copy of the request to the San Diego Water Board. If CILA refuses or does not confirm within one month, the Discharger shall communicate the same to the San Diego Water Board in writing in a timely manner.

c) The Discharger may, for reasons of international protocol, submit the TRE Workplan, TRE Final Report, and other documents described in section VI.C.2.e.iv to CILA in English. If the documents are submitted in English, the Discharger shall request in writing that CILA translate the documents into Spanish prior to distribution to the stakeholders in Mexico. If CILA does not translate the documents as requested, the Discharger shall do the translation.

3. Best Management Practices and Pollution Prevention – Not Applicable

4. Construction, Operation and Maintenance Specifications – Not Applicable

5. Special Provisions for Municipal Facilities (Wastewater Facilities Only)

a. **Influent Limitations**

i. In consultation with CILA the Discharger shall develop and comply with mass emission rates and concentration limitations for the influent to the Facility (influent limitations), or Maximum Allowable Headworks Allocations (MAHA), for pollutants that may cause or contribute to interference, pass through, or the other problems described at 40 CFR section 403.5. The influent limitations shall prevent violations of the Ocean Plan and this Order. At a minimum, the following information shall be considered in developing the influent limitations:

a) ***Wastewater characteristics*** -- Monthly average plant operational data from the Facility and other wastewater monitoring data after secondary treatment was completed.

b) ***Effluent limitations and discharge specifications*** -- The analysis shall be conducted using the effluent limitations and discharge specifications contained in this Order.

c) ***Inhibition/interference data*** -- Literature from USEPA guidance or other sources. The analysis shall include, but is not be limited to, inhibition/inference from litter, sand, and sediment.

d) ***Process removal data*** -- If influent and effluent values are available, actual removal rates from advanced primary and secondary treatment operating data at the Facility shall be calculated. If sufficient data are not available, literature values from the USEPA Water Engineering Research Laboratory (WERL) Treatability Database may be used. A mass balance (input-output) approach shall be conducted to convert criteria into allowable headworks loadings. This includes tracing the routes of each pollutant through the treatment process, taking into account pollutant removals in treatment units.

e) ***Background data*** -- Values for domestic/background levels from USEPA guidance or other sources.

f) ***Safety factor*** – The Discharger, in consultation with CILA, shall recommend and evaluate appropriate approaches regarding growth, slug loadings, and data uncertainty.

The Discharger shall submit the report with the proposed influent limitations to the San Diego Water Board via the State Water Board's CIWQS Program Web site, no later than one year after the adoption of this Order, for approval and incorporation into this Order.

ii. The final influent limitations developed under section VI.C.5.a.i of this Order and approved by the San Diego Water Board are listed below in Table 7. Compliance with these final influent limitations shall be measured at Monitoring Location INF-001 as described in the Monitoring and Reporting Program, Attachment E.

Table 7. Final Influent Limitations

Parameter	Average Monthly Influent Limitation	
	mg/l[1]	lbs/day
Antimony	0.44	92
Arsenic	0.0403	8.41
Cadmium	0.0165	3.44
Chromium, Total	0.257	53.6
Copper	0.0480	10.0
Cyanide	0.103	21.4
Lead	0.259	54.0
Mercury	0.00369	0.77
Molybdenum	0.337	70.2
Nickel	0.218	45.5
Selenium	0.0208	4.34
Silver	0.0916	19.1
Thallium, Total	0.212	44.2
Zinc	0.0820	17.1
Chlorodibromomethane (Dibromochloromethane)	2.61	545
Chloroform	0.0116	2.41

Parameter	Average Monthly Influent Limitation	
	mg/l[1]	lbs/day
Phenol	3.26	680
Tetrachlorodibenzodioxin (TCDD) Equivalents	0.0000000233	0.00000486
Toluene	150.00	31,275

1. Concentration-based influent limitations based on the facility permitted flow of 25 MGD.

iii. Any exceedance of an interim or final influent limitation, as applicable, is inconsistent with IBWC Minute No. 283 of July 2, 1990. The Discharger shall take all actions available under U.S. law and international treaty and agreement to achieve compliance with those limitations. If the Discharger is unable to achieve compliance with the influent limitations, the Discharger shall formally elevate the matter in writing within the U.S. Department of State regarding the reasons for lack of progress and offer strategies for addressing the difficulties. The Discharger shall encourage elevated diplomatic attention by the U.S. Department of State to issues that the Discharger has been unable to resolve. Similarly, USEPA shall elevate discussion within the Office of Water and the Office of International Activities. A copy of the written request to the U.S. Department of State shall be submitted to the San Diego Water Board in a timely manner.

b. **Sharing Pretreatment Information with Mexico**

i. The Discharger shall conduct binational technical committee meetings periodically but no less than twice per year, with simultaneous translation services, if needed. The Discharger shall invite CILA, the San Diego Water Board, and USEPA to attend. In consultation with CILA, the Discharger shall consider inviting additional stakeholders including, but not limited to, SPA, CESPT, PROFEPA, and other local authorities in the United States and Mexico. The Discharger shall prepare an agenda with input from invited stakeholders and shall prepare a meeting summary after the meeting and distribute to all invited stakeholders. The binational technical committee meetings for pretreatment can be combined with the binational technical committee meetings for transboundary wastewater flows required in section VI.C.2.b.ii. The Discharger shall promote discussion of binational interests, including but not limited to the following information:

(1) influent monitoring data;

(2) a comparison of influent monitoring data compared to the influent limitations, including identification of any exceedances of influent limitations;

(3) an analysis of the influent monitoring data, including an evaluation and interpretation of the influent data and a discussion of any actual or potential adverse effect(s) attributable to the influent on the Facility treatment works, including but not limited to interference as defined in 40 CFR section 403.3(k), pass through of pollutants as defined in 40 CFR section 403.3(p), or acute worker health and safety problems or other problems as defined in 40 CFR section 403.5(b); and

(4) a description of the steps taken or planned by the Discharger and/or the government of Mexico to reduce, eliminate, and prevent the reoccurrence of

noncompliance with influent limitations or any actual or potential adverse effect(s) attributable to the influent on the Facility treatment works.

ii. In the event of an exceedance of an influent limitation, the Commissioner of the Discharger or designee shall notify the Commissioner of CILA or designee in writing within 24 hours of becoming aware of the exceedance.

iii. The Discharger shall share the monthly SMR required in Attachment E of this Order with CILA on or before the due date for submittal to the San Diego Water Board. The monthly SMR shall include at a minimum the following information:

(1) influent monitoring data;

(2) a comparison of influent monitoring data compared to the influent limitations, including identification of any exceedances of influent limitations;

(3) an analysis of the influent monitoring data, including an evaluation and interpretation of the influent data and a discussion of any actual or potential adverse effect(s) attributable to the influent on the Facility treatment works, including but not limited to interference as defined in 40 CFR section 403.3(k), pass through of pollutants as defined in 40 CFR section 403.3(p), or acute worker health and safety problems or other problems as defined in 40 CFR section 403.5(b); and

(4) a description of the steps taken or planned by the Discharger and/or the government of Mexico to reduce, eliminate, and prevent the reoccurrence of noncompliance with influent limitations or any actual or potential adverse effect(s) attributable to the influent on the Facility treatment works.

iv. Each quarter, the Discharger shall prepare technical presentations which clearly do the following:

(1) summarizes influent monitoring data for the Facility;

(2) compares the influent monitoring data to the influent limitations, identifying any exceedances of influent limitations

(3) compares the current influent monitoring data with the influent monitoring data from the previous year for the same time periods;

(4) analyses the influent monitoring data, including an evaluation and interpretation of the influent data and a discussion of any actual or potential adverse effect(s) attributable to the influent on the Facility treatment works, including but not limited to interference as defined in 40 CFR section 403.3(k), pass through of pollutants as defined in 40 CFR section 403.3(p), or acute worker health and safety problems or other problems as defined in 40 CFR section 403.5(b); and

(5) describes of the steps taken or planned by the Discharger and/or the government of Mexico to reduce, eliminate, and prevent the reoccurrence of noncompliance with influent limitations or any actual or potential adverse effect(s) attributable to the influent on the Facility treatment works.

The presentation may be combined with the technical presentation required in section VI.C.2.b.v of this Order. With each presentation, the Discharger shall

also prepare a one-page information sheet which highlights any challenges associated with the Facility influent.

a) The Discharger shall meet with CILA each quarter to share the approved presentations and one-page information sheets and answer any questions about its content. If there are (1) no influent limitation exceedances; and (2) no instances of any actual or potential adverse effect(s) attributable to the influent on the Facility treatment works, including, but not limited to, interference as defined in 40 CFR section 403.3(k), pass through of pollutants as defined in 40 CFR section 403.3(p), or acute worker health and safety problems or other problems as defined in 40 CFR section 403.5(b), during any given quarter, the Discharger is not required to prepare a technical presentation or information sheet for that quarter. If there is no technical presentation or information sheet for that quarter, the Discharger is not required to meet with CILA for that quarter.

b) The Discharger shall request in writing that CILA share the approved presentations at venues hosted by the regulated community at least once, if appropriate venues are available. If CILA refuses or fails to confirm within one month, the Discharger shall communicate the same to the San Diego Water Board in writing in a timely manner.

c) The Discharger shall request in writing that CILA share the approved presentations with SPA and CESPT. If CILA refuses or does not confirm within one month, the Discharger shall communicate the same to the San Diego Water Board in writing in a timely manner.

d) The Discharger shall request in writing that CILA provide the approved one-page information sheets to SPA and CESPT for inclusion in billing for industrial customers. If CILA refuses or does not confirm within one month, the Discharger shall communicate the same to the San Diego Water Board in writing in a timely manner.

e) If there is an exceedance of allocated loadings for a given constituent during a quarter, the Discharger shall request in writing that CILA host a pretreatment workshop focused on the associated contaminant(s) within 60 days following the calendar month in which the exceedance occurred. If needed, a minimum of one workshop will be hosted per year. If CILA refuses to cooperate or does not confirm, the Discharger shall communicate the same to the San Diego Water Board in writing in a timely manner.

f) The presentations and one-page information sheets shall follow the schedule below, unless the Discharger is otherwise directed in writing by the San Diego Water Board:

Table 8. Sharing Pretreatment Information with Mexico

Quarterly Presentation and Information Sheet Period[1]	Presentations and Information Sheets Due to the San Diego Water Board	Discharger Share with Presentations and Information Sheets with CILA	Discharger Request for CILA to Share Presentations and Information Sheets
January 1 through March 31	May 15	June 1	June 15
April 1 through June 30	August 15	September 1	September 15
July 1 through September 30	November 15	December 1	December 15
October 1 through December 31	February 15	March 1	March 15

1 If there are(1) no influent limitation exceedances; and (2) no instances of any actual or potential adverse effect(s) attributable to the influent on the Facility treatment works, including, but not limited to, interference as defined in 40 CFR section 403.3(k), pass through of pollutants as defined in 40 CFR section 403.3(p) , or acute worker health and safety problems or other problems as defined in 40 CFR section 403.5(b), during any given quarter, the Discharger is not required to prepare a technical presentation or information sheet for that quarter. If there is no technical presentation or information sheet for that quarter, the Discharger is not required to meet with CILA for that quarter.

v. The Discharger may, for reasons of international protocol, submit the agenda, meeting summary, monthly SMR, technical presentation, one-page information sheet, and other documents described in section VI.C.5.b to CILA in English. If the documents are submitted in English, the Discharger shall request in writing that CILA translate the documents into Spanish prior to distribution to the stakeholders in Mexico. If CILA does not translate the documents as requested, the Discharger shall do the translation.

c. **Pretreatment Conditions for the Discharger**

The Discharger shall take the following measures to achieve the influent limitations contained in section VI.C.5.b and compliance with pretreatment program requirements within the communities that contribute wastewater to the Facility.

i. Consistent with the *Treaty for the Utilization of Waters of the Colorado and Tijuana Rivers and of the Rio Grande* (Treaty of 1944) and IBWC Minute No. 283, the Discharger shall work with CILA to take all appropriate actions to prevent the discharge of untreated industrial wastewater into the Tijuana sewage collection system which would in turn discharge into the Facility. In particular, the Discharger shall work with CILA to encourage and enhance the ability of CILA, SPA, SDUE, and/or CESPT to prevent the introduction of pollutants into the Tijuana sewage collection system that a) inhibit or disrupt the Facility, its treatment processes or operations, or its sludge processes, use, or disposal; or b) pass through the Facility in quantities or concentrations that cause or contribute to an exceedance of an applicable water quality standard in the receiving water.

ii. The Discharger shall monitor and limit the pollutants in the influent from Mexico to the Facility and report the monitoring results as specified in Attachment E of this Order.

iii. The Discharger shall work with CILA to

a) Improve communication between CILA, SPA, SDUE and CESPT with respect to influent quality and effluent quality at the Facility;

b) Provide training to SPA, SDUE, and CESPT and the business community in Tijuana, Mexico regarding pretreatment requirements and the impacts of influent limitation exceedances;

c) Provide funding, if available, and/or assistance to SPA, SDUE, and CESPT to improve monitoring capabilities, to improve laboratory analytical capabilities (including lab certification for the Tijuana water quality laboratory), and to assist in providing educational programs to the regulated community.

iv. Annually, the Discharger shall request in writing from CILA the information listed below for the previous calendar year. If CILA refuses or fails to provide this information by March 1, the Discharger shall communicate the same to the San Diego Water Board in writing in a timely manner.

a) A brief description of any programs CILA (and/or other agencies) implements to reduce pollutants from non-domestic users that are not classified as Significant Industrial Users (SIUs) (a non-domestic user would be any commercial or industrial user);

b) A brief description of the development and implementation of any local limits and enforcement programs.

c) A brief description of any significant changes in operating the pretreatment program which differ from the previous year including, but not limited to, changes concerning the program's administrative structure, local limits, monitoring program or monitoring frequencies, legal authority, enforcement policy, funding levels, or staffing levels;

d) A summary of the annual pretreatment budget, including the cost of pretreatment program functions and equipment purchases;

e) A summary of all activities undertaken to involve and inform the public of the pretreatment program and pretreatment requirements including a copy of any notices provided;

f) A list of the industries that could discharge to the Facility including the name, location, activity, type of waste, applicable local limits (if any), and any enforcement activities (if any); and

g) Industrial and/or wastewater collection system monitoring in Tijuana conducted by CILA, CESPT, SPA, SDUE, and/or CESPT.

v. By March 31 of each year, the Discharger shall submit an annual report to USEPA Region 9 and the San Diego Water Board for the previous calendar year. The report shall contain the following:

a) A discussion of upset, interference, or pass through incidents at the Facility, if any, which the Discharger knows or suspects were caused by the influent to the Facility;

b) Influent limitation exceedances, if any;

c) A discussion of any coordination with CILA to determine the reasons why the incidents above occurred and any corrective actions (if applicable);

d) A description of all activities undertaken during the previous calendar year working with CILA and any other entities in Mexico to address any upset, interference, or pass through incidents described in section VI.C.5.d.v.a), to address any influent limitation exceedances, and to meet the requirements in section VI.C.5.d.iii;

e) A description of any changes in sludge disposal methods;

f) A description of any significant changes in the influent limitations or implementation plan;

g) A discussion of any concerns not described elsewhere in this report.

h) The annual report provided by CILA as per section VI.C.5.d.iv, if any; and

i) A copy of the agenda and meeting summary required in section VI.C.5.c.i; the notification required in section VI.C.5.c.ii (if any); and the written requests to CILA required in sections VI.C.5.c.iii.b), VI.C.5.c.iii.c), VI.C.5.c.iii.d), VI.C.5.c.iii.e), and VI.C.5.c.iv.

The Discharger shall submit this annual report to the USEPA Region 9 and San Diego Water Board at the following addresses:

USEPA Region 9 Pretreatment Coordinator 75 Hawthorne Street San Francisco, CA 94105	California Regional Water Quality Control Board, San Diego Region Pretreatment Coordinator 2375 Northside Drive San Diego, CA 92108

If either agency relocates its offices, the annual report shall be submitted to the new office address provided by the San Diego Water Board.

vi. If, after one year of the effective date of this permit, the requirements in this Order are not sufficient to achieve the goals described in section VI.C.5.d.i, the Discharger shall submit a proposal for additional action(s) that will be taken to achieve these goals, and the permit may be amended to incorporate the proposed actions. The proposal must be received by the San Diego Water Board by 18 months after the effective date of this permit.

d. **Sludge (Biosolids) Requirements**[4]

i. The handling, treatment, use, management, and disposal of sludge and solids derived from wastewater treatment must comply with applicable provisions of section 405 of the CWA and USEPA regulations at 40 CFR parts 257, 258, 501, and 503, including all monitoring, record keeping, and reporting requirements.

ii. The discharge of sludge from the Facility in the United States or at a location where the sludge or sludge constituents could be conveyed to the United States by surface or ground water is prohibited.

iii. All sludge generated at the Facility shall be removed from the Facility within 6 months of being generated. Any site in the United States where sludge generated by the Discharger is stored for more than two years will be classified by USEPA as a surface disposal site pursuant to 40 CFR part 503 Subpart C. The Discharger must ensure that the USEPA receives from the operator of any such surface disposal site, the notification required in 40 CFR section 122.21, 180 days before the site becomes a surface disposal site. The Discharger must also ensure that the site operator begins complying fully with the requirements in 40 CFR part 503 Subpart C for surface disposal sites at the two-year start date. If the Discharger wants to store sludge for over two years, or allow a contractor to store sludge for over two years, the Discharger must submit the information in 40 CFR section 503.20(b) to USEPA in writing. The notification must be received by the USEPA 180 days prior to the date at which the site becomes a surface disposal site.

iv. All requirements of 40 CFR part 503 and title 23, division 3, chapter 15 of the CCR are enforceable whether or not the requirements of those regulations are stated in an NPDES permit or any other permit issued to the Discharger.

v. The Discharger shall take all reasonable steps to prevent and minimize any solids and sludge treatment, storage, and transfer in violation of this Order that has a likelihood of adversely affecting human health or the environment in the United States.

vi. Solids and sludge treatment, storage, and transfer shall not create a nuisance, such as objectionable odors or flies, and shall not result in groundwater contamination in the United States. The Discharger shall use a tarp to cover the sludge during any storage or during transportation to the international border.

vii. The solids and sludge treatment and storage site in the United States shall have adequate facilities to divert surface water runoff from adjacent areas to protect the boundaries of the site from erosion, and to prevent drainage from the treatment and storage site. Adequate protection is defined as protection, at the minimum, from a 100-year 24-hour storm event, 100-year peak stream flows as defined by the San Diego County Flood Control Agency, and protection from the highest possible tidal stage that may occur.

viii. The Discharger shall develop a Sludge Spill Prevention and Response Plan.

[4] See Attachment A for definitions of abbreviations and a glossary of common terms used in this Order.

ix. In the event that the Government of Mexico is unable to truck the processed sludge and solids to Mexico for disposal, the Discharger shall develop a Sludge and Solids Contingency Plan to dispose of, or temporarily store, the processed sludge and solids in the United States. Any disposal site or temporary storage site identified in the Sludge and Solids Contingency Plan shall comply with applicable provisions of section 405 of the CWA and USEPA regulations at 40 CFR parts 257, 258, 501, and 503, including all monitoring, record keeping, and reporting requirements. The Discharger shall submit the Sludge and Solids Contingency Plan to the San Diego Water Board and USEPA, no later than 180 days after the adoption of this Order.

x. **Monitoring Requirements**

a) The sludge shall be tested for all priority pollutants as specified in 40 CFR section 131.38 and for Total Threshold Limit Concentration/ Soluble Threshold Limits Concentrations (TTLC/STLC) constituents. This testing shall be done at a frequency dependent on the nature and effect of the sludge storage or disposal practices and at a minimum shall be as required by 40 CFR part 503.

b) If the sludge is stored in the United States for more than 24 hours, the sludge shall be sampled and tested for pH to ensure that the pH remains between 12 and 12.5 for the first two hours and greater than 11.5 for an additional 22 hours.

c) The Discharger shall develop a sampling plan for collection of representative samples for monitoring pollutants and constituents described in subsection a) above. The plan should include number and location of sampling points.

d) Samples of sludge shall be collected according to the procedures for compositing samples outlined in *Test Methods for Evaluating Solid Waste Physical/Chemical Methods* (EPA Publication SW-846, Second Edition, as updated). Samples shall be split, and a portion of the sample preserved, in the event that the results show concentrations of waste constituents that exceed 10 times the STLC listed in title 22 CCR.

e) Results of analyses shall be reported in mg/kg, wet weight and 100 percent dry weight. If the results indicate that the total concentration of any waste constituent is greater than 10 times the STLC value for the constituent listed in title 22 CCR, then the Discharger shall also perform a Waste Extraction Test on the sludge sample pursuant to title 22 CCR requirements.

xi. **Reporting Requirements**. The Discharger shall submit an annual report to USEPA and the San Diego Water Board by March 30 of each year for the period from January 1 through December 31 of the preceding year. The report shall include:

a) Amount of sludge generated that year at the Facility, in dry metric tons, and amount of sludge leaving the Facility;

b) Certification that all sludge was transferred to Mexico and no sludge was stored for more than 6 months in the United States or permanently disposed of in the United States;

c) A description or certification of the ultimate destination of the sludge in Mexico to the best of the Discharger's knowledge; and

d) Results of all monitoring required in Sludge (Biosolids) Requirements, section VI.C.5.d.x of this Order.

e. **Requirements for Receipt of Anaerobically Digestible Material**

If the Discharger proposes to receive hauled-in anaerobically digestible material for injection into an anaerobic digester, the Discharger shall notify the San Diego Water Board and develop and implement standard operating procedures (SOPs) for this activity. If hauled-in waste for digestion is already ongoing, the SOPs shall be developed within 90 days. Otherwise, the SOPs shall be developed prior to initiation of the hauling. The SOPs shall address material handling, including unloading, screening, or other processing prior to anaerobic digestion; transportation; spill prevention; and spill response. In addition, the SOPs shall address avoidance of the introduction of materials that could cause interference, pass-through, or upset of the treatment processes; avoidance of prohibited material; vector control; odor control; operation and maintenance; and the disposition of any solid waste segregated from introduction to the digester. The Discharger shall provide training to its staff on the SOPs and shall maintain records for a minimum of three years for each load received, describing the hauler, waste type, and quantity received. In addition, the Discharger shall maintain records for a minimum of three years for the disposition, location, and quantity of cumulative pre-digestion-segregated solid waste hauled off-site.

6. Other Special Provisions - Responsibilities, Liabilities, Legal Action, Penalties – Not Applicable

7. Compliance Schedules – Not Applicable

VII. COMPLIANCE DETERMINATION

Compliance with the effluent limitations contained in section IV of this Order will be determined as specified below:

A. Compliance with Average Monthly Effluent Limitation

If the average of daily discharges over a calendar month exceeds the average monthly effluent limitation (AMEL) for a given parameter, an alleged violation will be flagged and the Discharger will be considered out of compliance for each day of that month for that parameter (e.g., resulting in 31 days of noncompliance in a 31-day month). The average of daily discharges over the calendar month that exceeds the AMEL for a parameter will be considered out of compliance for the month only. If only a single sample is taken during the calendar month and the analytical result for that sample exceeds the AMEL, the Discharger will be considered out of compliance for that calendar month. For any one calendar month during which no sample (daily discharge) is taken, no compliance determination can be made for that calendar month.

B. **Compliance with Average Weekly Effluent Limitation**

If the average of daily discharges over a calendar week (Sunday through Saturday) exceeds the average weekly effluent limitation (AWEL) for a given parameter, an alleged violation will be flagged and the Discharger will be considered out of compliance for each day of that week for that parameter, resulting in 7 days of noncompliance. The average of daily discharges over the calendar week that exceeds the AWEL for a parameter will be considered out of compliance for that week only. If only a single sample is taken during the calendar week and the analytical result for that sample exceeds the AWEL, the Discharger will be considered out of compliance for that calendar week. For any one calendar week during which no sample (daily discharge) is taken, no compliance determination can be made for that calendar week.

C. **Compliance with Maximum Daily Effluent Limitation**

The maximum daily effluent limitation (MDEL) shall apply to flow weighted 24-hour composite samples, or grab samples, as specified in the MRP (Attachment E). If a daily discharge exceeds the MDEL for a given parameter, an alleged violation will be flagged and the Discharger will be considered out of compliance for that parameter for that one day only within the reporting period. For any one day during which no sample is taken, no compliance determination can be made for that day.

D. **Compliance with Instantaneous Minimum Effluent Limitation**

The instantaneous minimum effluent concentration limitation shall apply to grab sample analytical results. If the analytical result of a single grab sample is lower than the instantaneous minimum effluent limitation for a parameter, a violation will be flagged and the Discharger will be considered out of compliance for that parameter for that single sample. Non-compliance for each sample will be considered separately (e.g., the results of two grab samples taken within a calendar day that are both lower than the instantaneous minimum effluent limitation would result in two instances of noncompliance with the instantaneous minimum effluent limitation.)

E. **Compliance with Instantaneous Maximum Effluent Limitation**

The instantaneous maximum effluent concentration limitation shall apply to grab sample determinations. If the analytical result of a single grab sample is higher than the instantaneous maximum effluent limitation for a parameter, a violation will be flagged and the Discharger will be considered out of compliance for that parameter for that single sample. Non-compliance for each sample will be considered separately (e.g., the results of two grab samples taken within a calendar day that both exceed the instantaneous maximum effluent limitation would result in two instances of noncompliance with the instantaneous maximum effluent limitation).

F. **Compliance with 6-Month Median Effluent Limitation**

If the median concentration of daily discharges over any 180-day period exceeds the 6-month median effluent limitation for a given parameter, an alleged violation will be flagged and the Discharger will be considered out of compliance for each day of that 180-day period for that parameter. The next assessment of compliance will occur after the next sample is taken. If only a single sample is taken during a given 180-day period and the analytical result for that sample exceeds the 6-month median, the Discharger will be considered out of compliance for the 180-day period. For any 180-day period during which no sample is taken, no compliance determination can be made for the 6-month median limitation.

G. Compliance with 30-Day Average Effluent Limitation

If the arithmetic mean of daily discharges over any thirty consecutive day period exceeds the 30-day average effluent limitation, an alleged violation will be flagged and the Discharger will be considered out of compliance for each day of that 30-day period for that parameter. The next assessment of compliance will occur after the next sample is taken. If only a single sample is taken during a given 30-day period and the analytical result for that sample exceeds the 30-day average effluent limitation, the Discharger will be considered out of compliance for the 30-day period. For any 30-day period during which no sample is taken, no compliance determination can be made for the 30-day average effluent limitation.

H. Mass and Concentration Limitations

Compliance with mass and concentration effluent limitations for the same parameter shall be determined separately with their respective limitations. When the concentration of a constituent in an effluent sample is determined to be “Not Detected” (ND) or “Detectable but not quantifiable” (DNQ), the corresponding mass emission rate (MER) determined from that sample concentration shall also be reported as “ND” or “DNQ”.

I. Percent Removal

Compliance with percent removal requirements for average monthly percent removal of BOD5 and TSS shall be determined separately for each wastewater treatment facility discharging through an outfall. For each wastewater treatment facility, the monthly average percent removal is the average of the calculated daily discharge percent removals only for days on which the constituent concentration is monitored in both the influent and effluent of the wastewater treatment facility at the locations specified in the MRP (Attachment E) within a calendar month.

The percent removal for each day shall be calculated according to the following equation:

$$\text{Daily discharge percent removal} = \frac{\textit{Influent concentration} - \textit{Effluent concentration}}{\textit{Influent concentration}} \times 100\%$$

J. Ocean Plan Provisions for Table 1 Parameters

Sufficient sampling and analysis shall be required to determine compliance with the effluent limitations.

1. Compliance with Single-constituent Effluent Limitations

The Discharger shall be deemed out of compliance with an effluent limitation or discharge specification if the concentration of the constituent in the monitoring sample is greater than the effluent limitation or discharge specification and greater than or equal to the Minimum Level (ML).

2. Compliance with Effluent Limitations Expressed as a Sum of Several Parameters

The Discharger is out of compliance with an effluent limitation that applies to the sum of a group of chemicals (e.g., PCBs) if the sum of the individual pollutant concentrations is greater than the effluent limitation. Individual pollutants of the group will be considered to have a concentration of zero if the constituent is reported as ND or DNQ.

3. Multiple Sample Data Reduction

The concentration of the pollutant in the effluent may be estimated from the result of a single sample analysis or by a measure of central tendency (arithmetic mean, geometric mean, median, etc.) of multiple sample analyses when all sample results are quantifiable

(i.e., greater than or equal to the reported ML). When one or more sample results are reported as ND or DNQ, the central tendency concentration of the pollutant shall be the median (middle) value of the multiple samples. If, in an even number of samples, one or both of the middle values is ND or DNQ, the median will be the lower of the two middle values.

4. **Mass Emission Rate (MER)**

The MER, in pounds per day, shall be obtained from the following calculation for any calendar day:

Mass Emission Rate (lbs/day) = 8.34 x Q x C

In which Q and C are the flow rate in million gallons per day and the constituent concentration in mg/L, respectively, and 8.34 is a conversion factor (lbs/gallon of water). If a composite sample is taken, then C is the concentration measured in the composite sample and Q is the average flow rate occurring during the period over which the samples are composited.

K. **Bacteriological Standards and Analysis**

1. The geometric mean used for determining compliance with bacteriological standards is calculated with the following equation:

Geometric Mean = (C1 x C2 x … x Cn)1/n

Where n is the number of days samples were collected during the period and C is the density of bacteria (colony forming units (CFU)/100 mL) found on each day of sampling.

2. For all bacterial analyses, sample dilutions should be performed so the range of values extends from 2 to 16,000 CFU. The detection methods used for each analysis shall be reported with the results of the analysis. Detection methods used for coliforms (total and fecal) shall be those listed in 40 CFR part 136 or any improved method determined by the San Diego Water Board (and approved by USEPA) to be appropriate. Detection methods used for enterococcus shall be those presented in USEPA publication USEPA 600/4-85/076, Test Methods for Escherichia coli and Enterococci in Water by Membrane Filter Procedure, listed under 40 CFR part 136, and any other method approved by the San Diego Water Board.

L. **Single Operational Upset**

A single operational upset (SOU) that leads to simultaneous violations or more than one pollutant parameter shall be treated as a single violation, and limits the Discharger's liability in accordance with the following conditions:

1. A SOU is broadly defined as a single unusual event that temporarily disrupts the usually satisfactory operation of a system in such a way that it results in violation of multiple pollutant parameters.
2. The Discharger may assert SOU to limit liability only for those violations which the Discharger submitted notice of the upset as required in section I.H of Attachment D.
3. For purposes outside of Water Code sections 13385(h) and (i), determination of compliance and civil liability (including any more specific definition of SOU), the requirements for the Discharger to assert the SOU limitation of liability, and the manner of counting violations, shall be in accordance with the USEPA Memorandum "Issuance of Guidance Interpreting Single Operational Upset" (September 27, 1989).

4. For purposes of Water Code sections 13385(h) and (i), determination of compliance and civil liability (including any more specific definition of SOU), the requirements for the Discharger to assert the SOU limitation of liability, and the manner of counting violations shall be in accordance with Water Code section 13385(f)(2).

M. **Chronic Toxicity**

Chronic toxicity is used to measure the acceptability of waters for supporting a healthy marine biota until approved methods are developed to evaluate biological response. Compliance with the chronic toxicity effluent limitation, established in section IV.A.1 of this Order for Discharge Point No. 001, shall be determined using critical life stage toxicity tests in accordance with procedures prescribed by the Ocean Plan and restated in the MRP (Attachment E). Chronic toxicity shall be expressed as Toxic Units Chronic (TUc), where:

TUc = 100 / NOEL

NOEL is the No Observed Effect Level and is expressed as the maximum percent of effluent that causes no observable effect on a test organism, as determined by the result of a critical life stage toxicity test.

N. **Acute Toxicity**

Acute toxicity is used to measure the acceptability of waters for supporting a healthy marine biota until approved methods are developed to evaluate biological response. Compliance with the acute toxicity effluent limitation established in section IV.A.1 of this Order for Discharge Point No. 001 shall be determined using the following formula:

TUa (Toxic Units Acute) = 100 / 96-hr LC 50

where LC 50 (percent waste giving 50 percent survival of test organisms) shall be determined by static or continuous flow bioassay techniques using standard marine test species as specified in Appendix III of the Ocean Plan. If specific identifiable substances in wastewater can be demonstrated by the Discharger to be rapidly rendered harmless upon discharge to the marine environment, but not as a result of dilution, the LC 50 may be determined after the test samples are adjusted to remove the influence of those substances.

When the Discharger cannot measure the 96-hour LC 50 due to greater than 50 percent survival of the test species in 100 percent waste, the toxicity concentration shall be calculated by the expression:

TUa = (log[100 – S])/1.7

where S is the percent survival in 100 percent waste. If S is greater than 99, TUa shall be reported as zero.

ATTACHMENT A – Abbreviations and Glossary

Part 1. – Abbreviations

Abbreviation	Definition
AMEL	Average Monthly Effluent Limitation
ASBS	Areas of Special Biological Significance
AWEL	Average Weekly Effluent Limitation
Basin Plan	Water Quality Control Plan for the San Diego Basin
Cal OES	California Office of Emergency Services
$CBOD_5$	Carbonaceous Biochemical Oxygen Demand (5-Day at 20ºC)
CCR	California Code of Regulations
CESPT	Comisión Estatal de Servicios Públicos de Tijuana (or equivalent agency)
CFR	Code of Federal Regulations
CFU	Colony Forming Units
CILA	Comision Internacional de Límites y Aguas, Mexican Section of the International Boundary and Water Commission
CONAGUA	Comisión Nacional del Agua (or equivalent agency)
CWA	Clean Water Act
DEH	County of San Diego Department of Environmental Health
DDT	Dichlorodiphenyltrichloroethane
Dm	Initial Dilution
DNQ	Detected, but Not Quantified
GPS	Global Positioning System
HCH	Hexachlorocyclohexane
IBWC	International Boundary and Water Commission
IWTP	International Wastewater Treatment Plant
µg	Microgram
µg/L	Micrograms per Liter
lbs/day	Pounds per Day
LC	Lethal Concentration
LC 50	Percent Waste Giving 50 Percent Survival of Test Organisms
mg/L	Milligrams per Liter
ml/L	Milliliters per Liter
MDEL	Maximum Daily Effluent Limitation
MDL	Method Detection Limit
MGD	Million Gallons per Day
ML	Minimal Level
MPN	Most Probable Number
MRP	Monitoring and Reporting Program
MS4	Municipal Separate Storm Sewer System
ND	Not Detected
NR	Not Reported
NTU	Nephelometric Turbidity Unit
NPDES	National Pollutant Discharge Elimination System
NOEL	No Observed Effect Level

Abbreviation	Definition
Ocean Plan	California Ocean Plan, Water Quality Control Plan Ocean Waters Of California
PAH	Polynuclear Aromatic Hydrocarbons
PCB	Polychlorinated Biphenyls
PMP	Pollutant Minimization Program
Prevention/Response Plan	Spill and Transboundary Wastewater Flow Prevention and Response Plan
PROFEPA	Procuraduría Federal de Protección al Ambiente (or equivalent agency)
RL	Reporting Level
RPA	Reasonable Potential Analysis
SABWWTP	San Antonio de los Buenos Wastewater Treatment Plant
San Diego Water Board	California Regional Water Quality Control Board, San Diego Region
SBLO	South Bay Land Outfall
SBOO	South Bay Ocean Outfall
SBWRP	South Bay Water Reclamation Plant
SCCWRP	Southern California Coastal Waters Research Project
SDUE	City of Tijuana's Secretaría de Desarrollo Urbano y Ecología (or equivalent agency)
SPA	Secretaría de Protección al Ambiente (or equivalent agency)
State Water Board	State Water Resources Control Board
STLC	Soluble Threshold Limit Concentration
TIE	Toxicity Identification Evaluation
TMDL	Total Maximum Daily Load
TRE	Toxicity Reduction Evaluation
TSS	Total Suspended Solids
TTLC	Total Threshold Limit Concentration
TUa	Toxic Units Acute
TUc	Toxic Units Chronic
USEPA	United Stated Environmental Protection Agency
USIBWC	United States Section of the International Boundary and Water Commission
U.S.	United States
WERL	USEPA Water Engineering Research Laboratory
WET	Whole Effluent Toxicity
ZID	Zone of Initial Dilution

Part 2. – Glossary of Common Terms

30-day average
The arithmetic mean of pollutant parameter values of samples collected in a period of 30 consecutive days.

Acute Toxicity
The ability of a substance to cause severe biological harm or death soon after a single exposure or dose. The term acute toxicity also encompasses any poisonous effect resulting from a single short-term exposure to a toxic substance. The Ocean Plan determines acute toxicity through the use of the following equations.

a. Acute Toxicity (TUa)
Expressed in Toxic Units Acute (TUa)

$$TUa = \frac{100}{96\text{-hr LC 50}}$$

where:

LC 50 = Lethal Concentration 50% (see below)

When the 96-hour LC 50 cannot be measured due to greater than 50 percent survival of the test species in 100 percent waste, the toxicity concentration shall be calculated by the expression:

$$TUa = \frac{\log (100 - S)}{1.7}$$

where:

S = percentage survival in 100 percent waste. If S > 99, TUa shall be reported as zero.

b. Lethal Concentration 50% (LC 50)

LC 50 (percent waste giving 50 percent survival of test organisms) shall be determined by static or continuous flow bioassay techniques using standard marine test species as specified in Appendix III of the Ocean Plan. If specific identifiable substances in wastewater can be demonstrated by the discharger as being rapidly rendered harmless upon discharge to the marine environment, but not as a result of dilution, the LC 50 may be determined after the test samples are adjusted to remove the influence of those substances.

Anaerobically Digestible Material
Inedible kitchen grease as defined in section 19216 of the Food and Agricultural Code and food material as defined in Title 14, CCR, Division 7, Chapter 3.1, Article 1, Section 17582(a)(20).

Areas of Special Biological Significance (ASBS)
Those areas designated by the State Water Resources Control Board (State Water Board) as ocean areas requiring protection of species or biological communities to the extent that alteration of natural water quality is undesirable. All ASBS are also classified as a subset of STATE WATER QUALITY PROTECTION AREAS.

Average Monthly Effluent Limitation (AMEL)
The highest allowable average of daily discharges over a calendar month, calculated as the sum of all daily discharges measured during a calendar month divided by the number of daily discharges measured during that month.

Average Weekly Effluent Limitation (AWEL)
The highest allowable average of daily discharges over a calendar week (Sunday through Saturday), calculated as the sum of all daily discharges measured during a calendar week divided by the number of daily discharges measured during that week.

Biosolids
Nutrient-rich organic materials resulting from the treatment of sewage sludge. When treated and processed, sewage sludge becomes biosolids which can be safely recycled and applied as fertilizer to sustainably improve and maintain productive soils and stimulate plant growth.

Bypass
The intentional diversion of waste streams from any portion of a treatment facility. (40 CFR Part 122.41(m)(1)(i).)

Chlordane
The sum of chlordane-alpha, chlordane-gamma, chlordene-alpha, chlordene-gamma, nonachlor-alpha, nonachlor-gamma, and oxychlordane.

Chronic Toxicity
The capacity of a substance to cause long-term poisonous health effects in humans, animals, fish, and other organisms. This parameter shall be used to measure the acceptability of waters for supporting a healthy marine biota until improved methods are developed to evaluate biological response. The Ocean Plan determines chronic toxicity through the use of the following equations.

a. Chronic Toxicity (TUc)
   Expressed as Toxic Units Chronic (TUc)

$$TUc = \frac{100}{NOEL}$$

b. No Observed Effect Level (NOEL)

   The NOEL is expressed as the maximum percent effluent or receiving water that causes no observable effect on a test organism, as determined by the result of a critical life stage toxicity test listed in Ocean Plan Appendix II.

Chlorinated phenolic compounds
The sum of 4-chloro-3-methylphenol, 2-chlorophenol, pentachlorophenol, 2,4,5-trichlorophenol, and 2,4,6-trichlorophenol.

Daily Discharge
Daily Discharge is defined as either: (1) the total mass of the constituent discharged over the calendar day (12:00 am through 11:59 pm) or any 24-hour period that reasonably represents a calendar day for purposes of sampling (as specified in the permit), for a constituent with limitations expressed in units of mass or; (2) the unweighted arithmetic mean measurement of the constituent over the day for a constituent with limitations expressed in other units of measurement (e.g., concentration).

The daily discharge may be determined by the analytical results of a composite sample taken over the course of one day (a calendar day or other 24-hour period defined as a day) or by the arithmetic mean of analytical results from one or more grab samples taken over the course of the day.

For composite sampling, if 1 day is defined as a 24-hour period other than a calendar day, the analytical result for the 24-hour period will be considered as the result for the calendar day in which the 24-hour period ends.

DDT
The sum of 4,4'DDT, 2,4'DDT, 4,4'DDE, 2,4'DDE, 4,4'DDD, and 2,4'DDD.

Degrade
Degradation shall be determined by comparison of the waste field and reference site(s) for characteristic species diversity, population density, contamination, growth anomalies, debility, or supplanting of normal species by undesirable plant and animal species. Degradation occurs if there are significant differences in any of three major biotic groups, namely, demersal fish, benthic invertebrates, or attached algae. Other groups may be evaluated where benthic species are not affected, or are not the only ones affected.

Detected, but Not Quantified (DNQ)
Sample results that are less than the reported Minimum Level, but greater than or equal to the laboratory's MDL. Sample results reported as DNQ are estimated concentrations.

Dichlorobenzenes
The sum of 1,2- and 1,3-dichlorobenzene.

Downstream Ocean Waters
Waters downstream with respect to ocean currents.

Dredged Material
Any material excavated or dredged from the navigable waters of the United States, including material otherwise referred to as "spoil."

Dry Weather
Weather is considered dry if the preceding 72 hours have been without precipitation greater than 0.1 inch (>0.1 inch), based on the Goat Canyon Pump Station rain gauge.

Enclosed Bays
Indentations along the coast that enclose an area of oceanic water within distinct headlands or harbor works. Enclosed bays include all bays where the narrowest distance between headlands or outermost harbor works is less than 75 percent of the greatest dimension of the enclosed portion of the bay. This definition includes but is not limited to: Humboldt Bay, Bodega Harbor, Tomales Bay, Drakes Estero, San Francisco Bay, Morro Bay, Los Angeles Harbor, Upper and Lower Newport Bay, Mission Bay, and San Diego Bay.

Endosulfan
The sum of endosulfan-alpha and -beta and endosulfan sulfate.

Estuaries and Coastal Lagoons
Estuaries and Coastal Lagoons are waters at the mouths of streams that serve as mixing zones for fresh and ocean waters during a major portion of the year. Mouths of streams that are temporarily separated from the ocean by sandbars shall be considered as estuaries. Estuarine waters will generally be considered to extend from a bay or the open ocean to the upstream limit of tidal action but may be considered to extend seaward if significant mixing of fresh and salt water occurs in the open coastal waters. The waters described by this definition include but are not limited to the Sacramento-San Joaquin Delta as defined by of Water Code section 12220, Suisun Bay, Carquinez Strait downstream to Carquinez Bridge, and appropriate areas of the Smith, Klamath, Mad, Eel, Noyo, and Russian Rivers.

Facility
South Bay International Wastewater Treatment Plant.

Facilities
South Bay International Wastewater Treatment Plant, five canyon collectors, two pump stations, the South Bay Land Outfall (SBLO), the South Bay Ocean Outfall (SBOO), and other associated infrastructure

Halomethanes
The sum of bromoform, bromomethane (methyl bromide) and chloromethane (methyl chloride).

HCH
The sum of the alpha, beta, gamma (lindane) and delta isomers of hexachlorocyclohexane.

Initial Dilution (Dm)
The process that results in the rapid and irreversible turbulent mixing of wastewater with ocean water around the point of discharge.

For a submerged buoyant discharge, characteristic of most municipal and industrial wastes that are released from the submarine outfalls, the momentum of the discharge and its initial buoyancy act together to produce turbulent mixing. Initial dilution in this case is completed when the diluting wastewater ceases to rise in the water column and first begins to spread horizontally.

For shallow water submerged discharges, surface discharges, and non-buoyant discharges, characteristic of cooling water wastes and some individual discharges, turbulent mixing results primarily from the momentum of discharge. Initial dilution, in these cases, is considered to be completed when the momentum induced velocity of the discharge ceases to produce significant mixing of the waste, or the diluting plume reaches a fixed distance from the discharge to be specified by the San Diego Water Board, whichever results in the lower estimate for initial dilution.

Instantaneous Maximum Effluent Limitation
The highest allowable value for any single grab sample or aliquot (i.e., each grab sample or aliquot is independently compared to the instantaneous maximum limitation).

Instantaneous Minimum Effluent Limitation
The lowest allowable value for any single grab sample or aliquot (i.e., each grab sample or aliquot is independently compared to the instantaneous minimum limitation).

Interference
A discharge which, alone or in conjunction with a discharge or discharges from other sources, both:

(1) Inhibits or disrupts the POTW, its treatment processes or operations, or its sludge processes, use or disposal; and

(2) Therefore is a cause of a violation of any requirement of the POTW's NPDES permit (including an increase in the magnitude or duration of a violation) or of the prevention of sewage sludge use or disposal in compliance with the following statutory provisions and regulations or permits issued thereunder (or more stringent State or local regulations): Section 405 of the Clean Water Act, the Solid Waste Disposal Act (SWDA) (including title II, more commonly referred to as the Resource Conservation and Recovery Act (RCRA), and including State regulations contained in any State sludge management plan prepared pursuant to subtitle D of the SWDA), the Clean Air Act, the Toxic Substances Control Act, and the Marine Protection, Research and Sanctuaries Act.

Kelp Beds
For purposes of the bacteriological standards of the Ocean Plan, kelp beds are significant aggregations of marine algae of the genera Macrocystis and Nereocystis. Kelp beds include the total foliage canopy of Macrocystis and Nereocystis plants throughout the water column.

Litter
Encompasses all improperly discarded waste material, including, but not limited to convenience food, beverage, and other product packages, or containers constructed of steel, aluminum, glass, paper, plastic, and other natural and synthetic materials, thrown or deposited on the lands and waters of the State.

Mariculture
The culture of plants and animals in marine waters independent of any pollution source.

Material
(a) In common usage: (1) the substance or substances of which a thing is made or composed (2) substantial; (b) For purposes of the Ocean Plan relating to waste disposal, dredging and the disposal of dredged material and fill, MATERIAL means matter of any kind or description which is subject to regulation as waste, or any material dredged from the navigable waters of the United States. See also, DREDGED MATERIAL.

Maximum Daily Effluent Limitation (MDEL)
The highest allowable daily discharge of a pollutant.

Method Detection Limit (MDL)
The minimum concentration of a substance that can be measured and reported with 99 percent confidence that the analyte concentration is greater than zero, as defined in 40 CFR part 136, Attachment B.

Minimum Level (ML)
The concentration at which the entire analytical system must give a recognizable signal and acceptable calibration point. The ML is the concentration in a sample that is equivalent to the concentration of the lowest calibration standard analyzed by a specific analytical procedure, assuming that all the method specified sample weights, volumes, and processing steps have been followed.

Natural Light
Reduction of natural light may be determined by the San Diego Water Board by measurement of light transmissivity or total irradiance, or both, according to the monitoring needs of the San Diego Water Board.

Not Detected (ND)
Those sample results less than the laboratory's MDL.

Ocean Waters
The territorial marine waters of the state as defined by California law to the extent these waters are outside of enclosed bays, estuaries, and coastal lagoons. If a discharge outside the territorial waters of the state could affect the quality of the waters of the state, the discharge may be regulated to assure no violation of the Ocean Plan will occur in ocean waters.

Pass Through
A discharge which exits the POTW into waters of the United States in quantities or concentrations which, alone or in conjunction with a discharge or discharges from other sources, is a cause of a violation of any requirement of the POTW's NPDES permit (including an increase in the magnitude or duration of a violation.

Percent Removal
A percentage expression of the removal efficiency across a treatment plant for a given pollutant parameter, as determined from the average values of the raw wastewater influent pollutant concentrations to the facility and the average values of the effluent pollutant concentrations for a given time period.

Polynuclear Aromatic Hydrocarbons (PAHs)
The sum of acenaphthylene, anthracene, 1,2-benzanthracene, 3,4-benzofluoranthene, benzo[k]fluoranthene, 1,12-benzoperylene, benzo[a]pyrene, chrysene, dibenzo[ah]anthracene, fluorene, indeno[1,2,3-cd]pyrene, phenanthrene and pyrene.

Polychlorinated Biphenyls (PCBs)
The sum of chlorinated biphenyls whose analytical characteristics resemble those of Aroclor-1016, Aroclor-1221, Aroclor-1232, Aroclor-1242, Aroclor-1248, Aroclor-1254 and Aroclor-1260.

Phenolic Compounds (non-chlorinated)
The sum of 2,4-dimethylphenol, 4,6-Dinitro-2-methylphenol, 2,3-dinitrophenol, 2-methylphenol, 4-methylphenol, 2-nitropheneol, 4-nitrophenol, and phenol.

Pollutant Minimization Program (PMP)
PMP means waste minimization and pollution prevention actions that include, but are not limited to, product substitution, waste stream recycling, alternative waste management methods, and education of the public and businesses. The goal of the PMP shall be to reduce all potential sources of Ocean Plan Table 1 pollutants through pollutant minimization (control) strategies, including pollution prevention measures as appropriate, to maintain the effluent concentration at or below the water quality-based effluent limitation. Pollution prevention measures may be particularly appropriate for persistent bioaccumulative priority pollutants where there is evidence that beneficial uses are being impacted. The San Diego Water Board may consider cost effectiveness when establishing the requirements of a PMP. The completion and implementation of a Pollution Prevention Plan, if required pursuant to Water Code section 13263.3(d), shall be considered to fulfill the PMP requirements.

Rehabilitation
Repair, renewal, and replacement of components to return the system to near-original condition and performance

Reported Minimum Level (also known as the Reporting Level or RL)
The reported ML (also known as the Reporting Level or RL) is the ML (and its associated analytical method) chosen by the Discharger for reporting and compliance determination from the MLs included in this Order, including an additional factor if applicable as discussed herein. The MLs included in this Order correspond to approved analytical methods for reporting a sample result that are selected by the San Diego Water Board either from Appendix II of the Ocean Plan in accordance with section III.C.5.a of the Ocean Plan, or established in accordance with section III.C.5.b of the Ocean Plan. The ML is based on the proper application of method-based analytical procedures for sample preparation and the absence of any matrix interferences. Other factors may be applied to the ML depending on the specific sample preparation steps employed. For example, the treatment typically applied in cases where there are matrix-effects is to dilute the sample or sample aliquot by a factor of ten. In such cases, thditional factor must be applied to the ML in the computation of the reported ML.

Severe Property Damage
Substantial physical damage to property, damage to the treatment facilities, which causes them to become inoperable, or substantial and permanent loss of natural resources that can reasonably be expected to occur in the absence of a bypass. Severe property damage does not mean economic loss caused by delays in production. (40 CFR Part 122.41(m)(1)(ii))

Shellfish
Organisms identified by the California Department of Health Services as shellfish for public health purposes (i.e., mussels, clams, and oysters).

Significant Difference
A statistically significant difference in the means of two distributions of sampling results at the 95 percent confidence level.

Six-Month Median Effluent Limitation
The highest allowable moving median of all daily discharges for any 180-day period.

Sludge
Any solid, semisolid, or liquid waste generated from a municipal, commercial, or industrial wastewater treatment plant, water supply treatment plant, or air pollution control facility or any other such waste having similar characteristics and effect.

State Water Quality Protection Areas (SWQPAs)
Non-terrestrial marine or estuarine areas designated to protect marine species or biological communities from an undesirable alteration in natural water quality. All AREAS OF SPECIAL BIOLOGICAL SIGNIFICANCE (ASBS) that were previously designated by the State Water Board in Resolution Nos. 74-28, 74-32, and 75-61 are now also classified as a subset of State Water Quality Protection Areas and require special protections afforded by the Ocean Plan.

TCDD Equivalents
The sum of the concentrations of chlorinated dibenzodioxins (2,3,7,8-CDDs) and chlorinated dibenzofurans (2,3,7,8-CDFs) multiplied by their respective toxicity factors, as shown in the table below.

Isomer Group	Toxicity Equivalence Factor
2,3,7,8-tetra CDD	1.0
2,3,7,8-penta CDD	0.5
2,3,7,8-hexa CDDs	0.1
2,3,7,8-hepta CDD	0.01
octa CDD	0.001
2,3,7,8 tetra CDF	0.1
1,2,3,7,8 penta CDF	0.05
2,3,4,7,8 penta CDF	0.5
2,3,7,8 hexa CDFs	0.1
2,3,7,8 hepta CDFs	0.01
octa CDF	0.001

Thirty-Day Average
See 30-day average above for definition of this term.

Toxicity Identification Evaluation (TIE)
A set of procedures conducted to identify the specific chemical(s) responsible for toxicity. These procedures are performed in three phases (characterization, identification, and confirmation) using aquatic organism toxicity tests.)

Toxicity Reduction Evaluation (TRE)
A study conducted in a step-wise process designed to identify the causative agents of effluent or ambient toxicity, isolate the sources of toxicity, evaluate the effectiveness of toxicity control options, and then confirm the reduction in toxicity. The first steps of the TRE consist of the collection of data relevant to the toxicity, including additional toxicity testing, and an evaluation of facility operations and maintenance practices, and best management practices. A Toxicity Identification Evaluation (TIE) may be required as part of the TRE, if appropriate. (A TIE is a set of procedures to identify the specific chemical(s) responsible for toxicity. These procedures are performed in three phases (characterization, identification, and confirmation) using aquatic organism toxicity tests.)

Transboundary Flows
Wastewater and other flows that cross the international border from Mexico into the United States.

Waste
As used in the Ocean Plan, waste includes a Discharger's total discharge, of whatever origin, i.e., gross, not net, discharge.

Water Recycling
The treatment of wastewater to render it suitable for reuse, the transportation of treated wastewater to the place of use, and the actual use of treated wastewater for a direct beneficial use or controlled use that would not otherwise occur.

Wet Weather
Wet weather is the period of time of a storm event of 0.1 inches or greater plus 72 hours after cessation of precipitation, based on the Goat Canyon Pump Station rain gauge, unless otherwise defined by another regulatory mechanism (e.g. a TMDL).

ATTACHMENT B – MAP

Map of the South Bay International Wastewater Treatment Plant, South Bay Ocean Outfall, Tijuana River, and Tributary Canyons

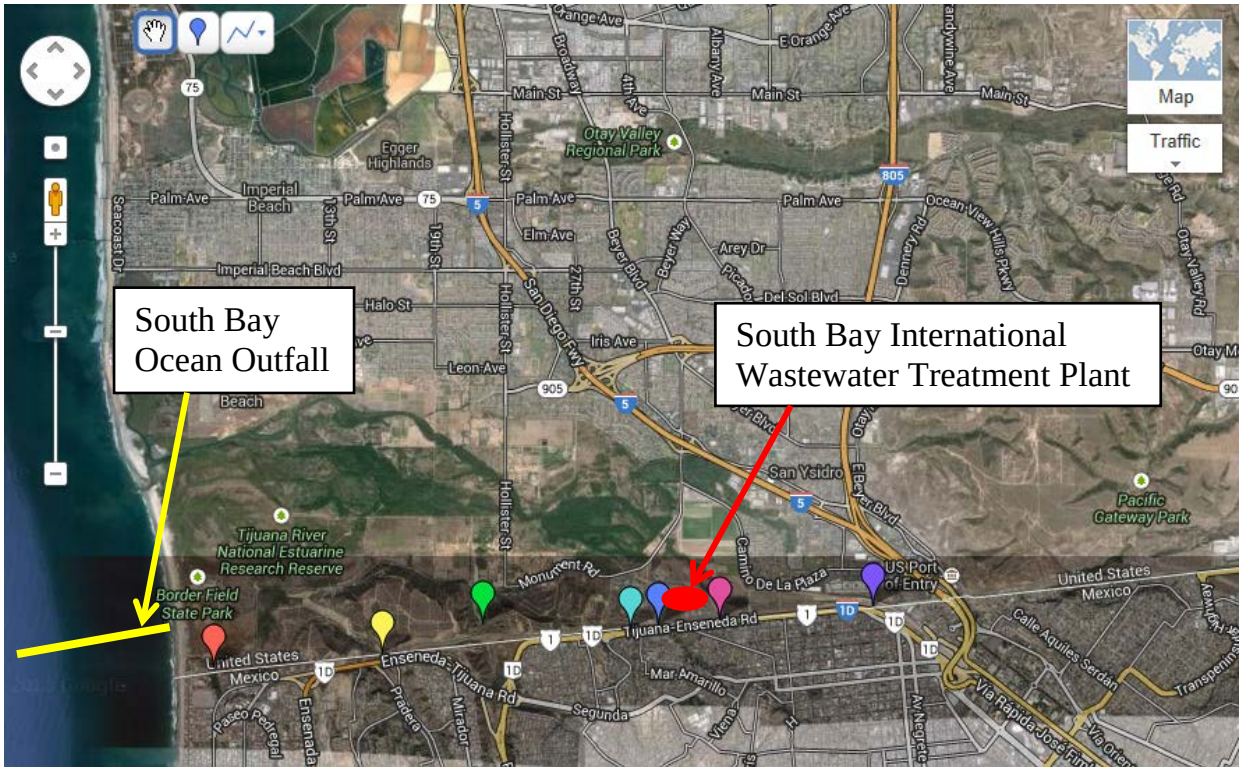

Map of Shoreline, Offshore, Trawl, and Rig Fishing Stations

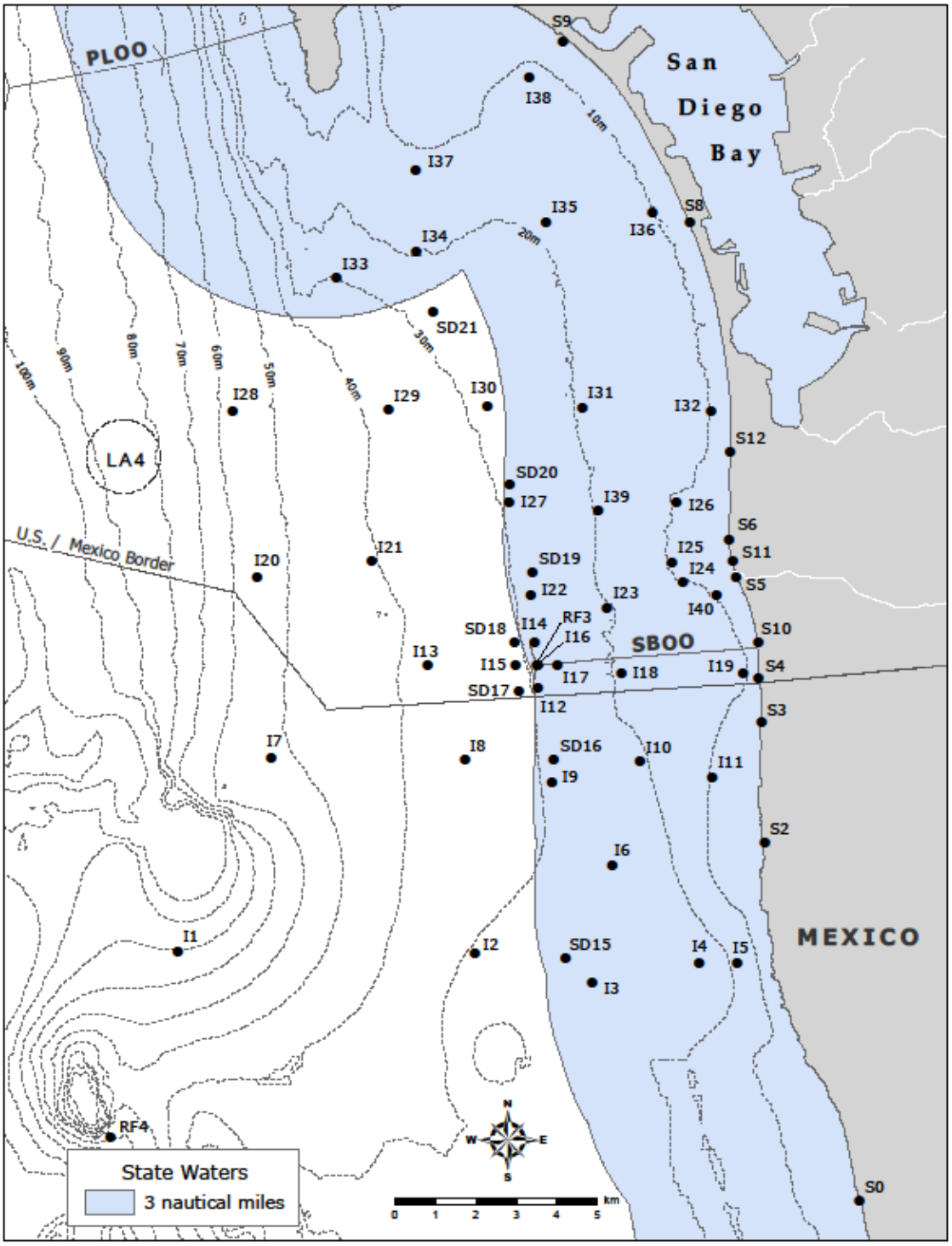

ATTACHMENT C – FLOW SCHEMATIC

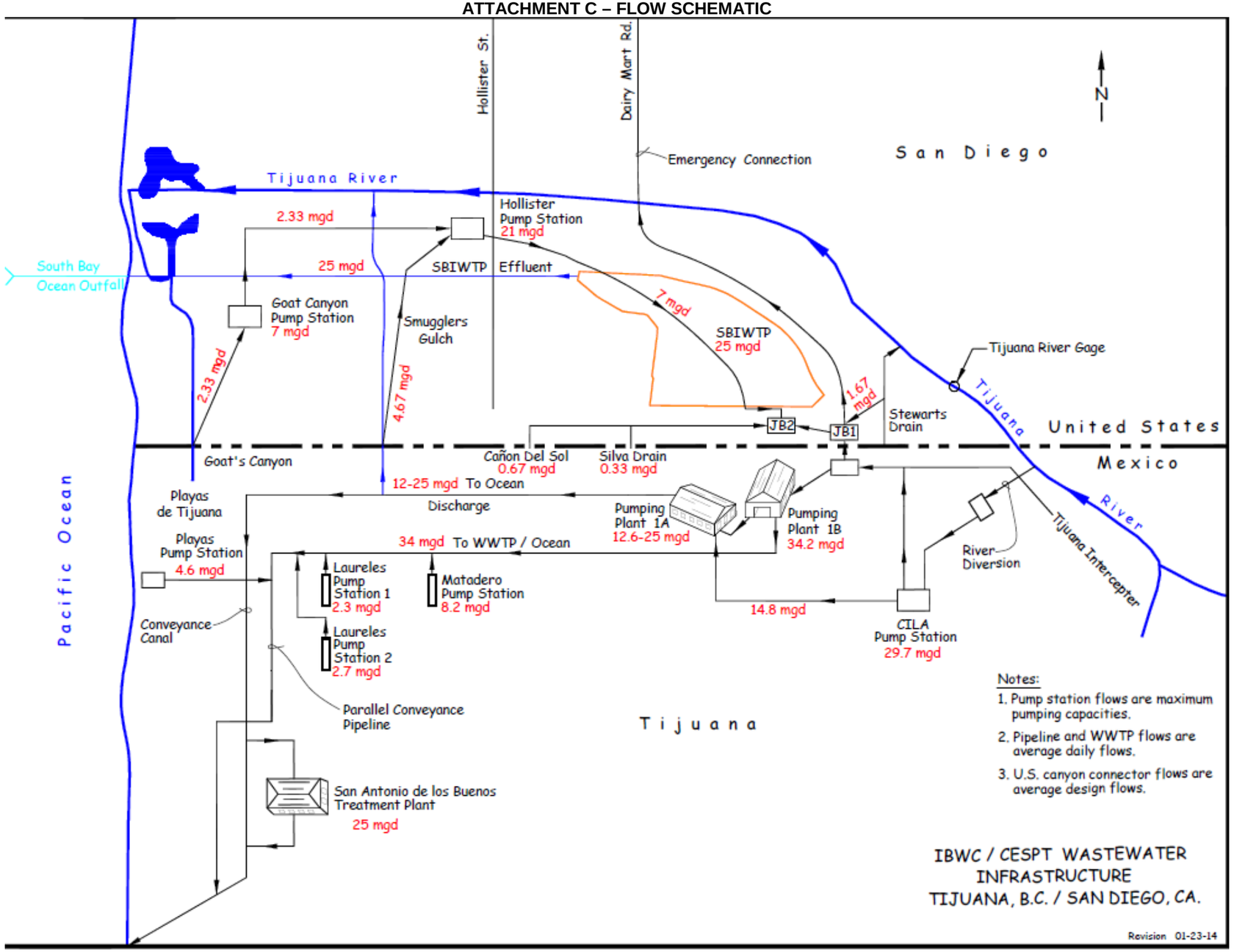

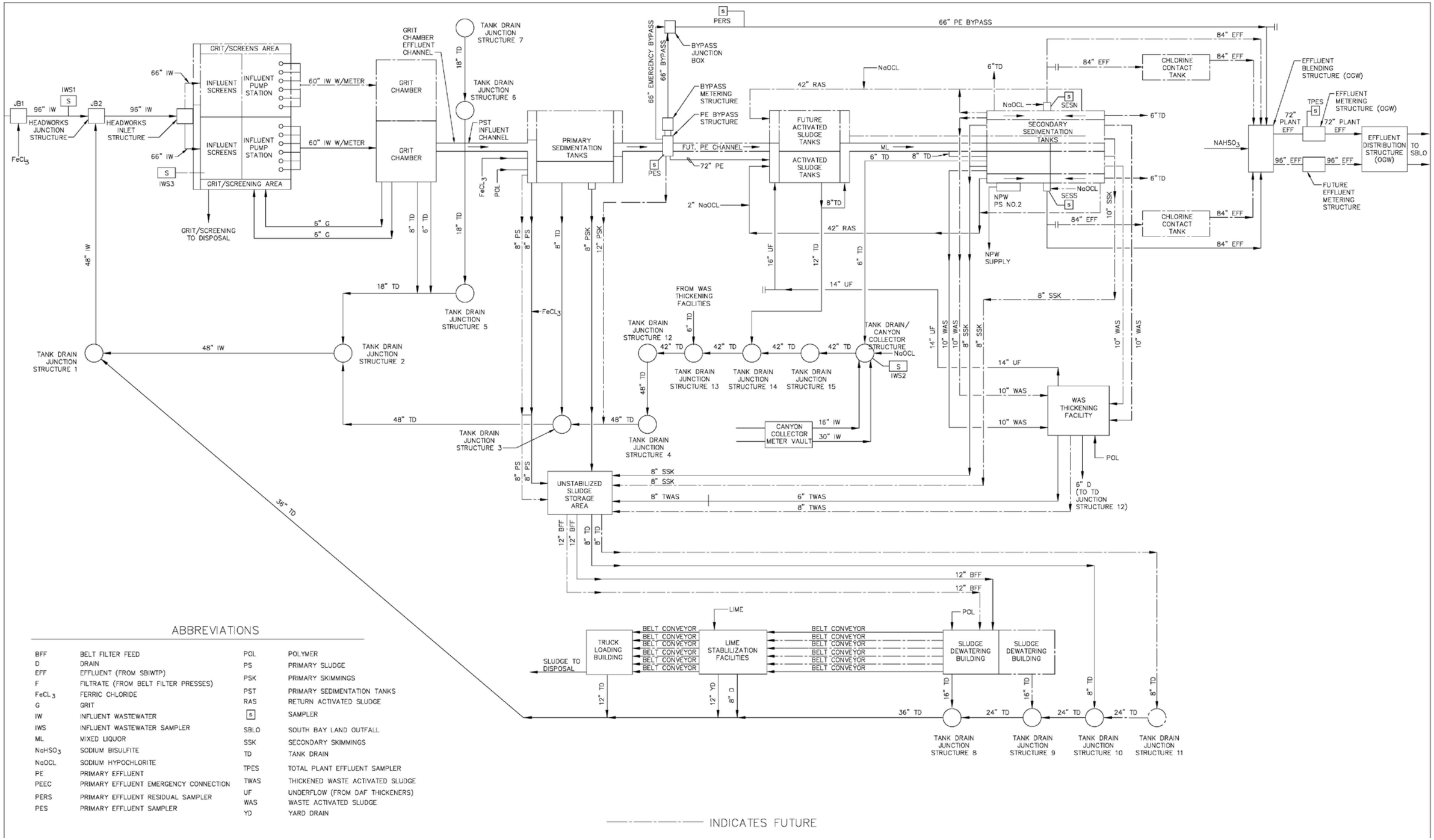

ABBREVIATIONS

BFF	BELT FILTER FEED	POL	POLYMER
D	DRAIN	PS	PRIMARY SLUDGE
EFF	EFFLUENT (FROM SBIWTP)	PSK	PRIMARY SKIMMINGS
F	FILTRATE (FROM BELT FILTER PRESSES)	PST	PRIMARY SEDIMENTATION TANKS
$FeCL_3$	FERRIC CHLORIDE	RAS	RETURN ACTIVATED SLUDGE
G	GRIT	S	SAMPLER
IW	INFLUENT WASTEWATER	SBLO	SOUTH BAY LAND OUTFALL
IWS	INFLUENT WASTEWATER SAMPLER	SSK	SECONDARY SKIMMINGS
ML	MIXED LIQUOR	TD	TANK DRAIN
$NaHSO_3$	SODIUM BISULFITE	TPES	TOTAL PLANT EFFLUENT SAMPLER
NaOCL	SODIUM HYPOCHLORITE	TWAS	THICKENED WASTE ACTIVATED SLUDGE
PE	PRIMARY EFFLUENT	UF	UNDERFLOW (FROM DAF THICKENERS)
PEEC	PRIMARY EFFLUENT EMERGENCY CONNECTION	WAS	WASTE ACTIVATED SLUDGE
PERS	PRIMARY EFFLUENT RESIDUAL SAMPLER	YD	YARD DRAIN
PES	PRIMARY EFFLUENT SAMPLER		

ATTACHMENT D – STANDARD PROVISIONS

I. STANDARD PROVISIONS – PERMIT COMPLIANCE

A. Duty to Comply

1. The Discharger must comply with all of the conditions of this Order. Any noncompliance constitutes a violation of the Clean Water Act (CWA) and the California Water Code and is grounds for enforcement action, for permit termination, revocation and reissuance, or modification; or denial of a permit renewal application. (40 CFR section 122.41(a).)

2. The Discharger shall comply with effluent standards or prohibitions established under section 307(a) of the CWA for toxic pollutants and with standards for sewage sludge use or disposal established under section 405(d) of the CWA within the time provided in the regulations that establish these standards or prohibitions, even if this Order has not yet been modified to incorporate the requirement. (40 CFR section 122.41(a)(1).)

B. Need to Halt or Reduce Activity Not a Defense

The Discharger shall not use as a defense in an enforcement action that halting or reducing the permitted activity would have been necessary in order to maintain compliance. (40 CFR section 122.41(c).)

C. Duty to Mitigate

The Discharger shall take all reasonable steps to minimize or prevent any discharge, or sludge use or disposal in violation of this Order that has a reasonable likelihood of adversely affecting human health or the environment. (40 CFR section 122.41(d).)

D. Proper Operation and Maintenance

The Discharger shall at all times properly operate and maintain all facilities and systems of treatment and control (and related appurtenances) which are installed or used by the Discharger to achieve compliance with the conditions of this Order. Proper operation and maintenance also includes adequate laboratory controls and appropriate quality assurance procedures. This provision requires the operation of backup or auxiliary facilities or similar systems that are installed by a Discharger only when necessary to achieve compliance with the conditions of this Order. (40 CFR section 122.41(e).)

E. Property Rights

1. This Order does not convey any property rights of any sort, or any exclusive privileges. (40 CFR section 122.41(g).)

2. The issuance of this Order does not authorize any injury to persons or property, or invasion of other private rights, or any infringement of state or local law or regulations. (40 CFR section 122.5(c).)

F. Inspection and Entry

The Discharger shall allow the San Diego Water Board, State Water Board, USEPA, and/or their authorized representatives (including an authorized contractor acting as their representative), upon the presentation of credentials and other documents, as may be required by law, to (40 CFR section 122.41(i); Water Code section 13383):

1. Enter upon the Discharger's premises where a regulated facility or activity is located or conducted, or where records are kept under the conditions of this Order (40 CFR section 122.41(i)(1));

2. Have access to and copy, at reasonable times, any records that must be kept under the conditions of this Order (40 CFR section 122.41(i)(2));
3. Inspect and photograph, at reasonable times, any facilities, equipment (including monitoring and control equipment), practices, or operations regulated or required under this Order (40 CFR section 122.41(i)(3)); and
4. Sample or monitor, at reasonable times, for the purposes of assuring Order compliance or as otherwise authorized by the CWA or the Water Code, any substances or parameters at any location. (40 CFR section 122.41(i)(4).)

G. Bypass

1. Definitions
   a. "Bypass" means the intentional diversion of waste streams from any portion of a treatment facility. (40 CFR section 122.41(m)(1)(i).)
   b. "Severe property damage" means substantial physical damage to property, damage to the treatment facilities, which causes them to become inoperable, or substantial and permanent loss of natural resources that can reasonably be expected to occur in the absence of a bypass. Severe property damage does not mean economic loss caused by delays in production. (40 CFR section 122.41(m)(1)(ii).)
2. Bypass not exceeding limitations. The Discharger may allow any bypass to occur which does not cause exceedances of effluent limitations, but only if it is for essential maintenance to assure efficient operation. These bypasses are not subject to the provisions listed in Standard Provisions – Permit Compliance I.G.3, I.G.4, and I.G.5 below. (40 CFR section 122.41(m)(2).)
3. Prohibition of bypass. Bypass is prohibited, and the San Diego Water Board may take enforcement action against a Discharger for bypass, unless (40 CFR section 122.41(m)(4)(i)):
   a. Bypass was unavoidable to prevent loss of life, personal injury, or severe property damage (40 CFR section 122.41(m)(4)(i)(A));
   b. There were no feasible alternatives to the bypass, such as the use of auxiliary treatment facilities, retention of untreated wastes, or maintenance during normal periods of equipment downtime. This condition is not satisfied if adequate back-up equipment should have been installed in the exercise of reasonable engineering judgment to prevent a bypass that occurred during normal periods of equipment downtime or preventive maintenance (40 CFR section 122.41(m)(4)(i)(B)); and
   c. The Discharger submitted notice to the San Diego Water Board as required under Standard Provisions – Permit Compliance I.G.5 below. (40 CFR section 122.41(m)(4)(i)(C).)
4. The San Diego Water Board may approve an anticipated bypass, after considering its adverse effects, if the San Diego Water Board determines that it will meet the three conditions listed in Standard Provisions – Permit Compliance I.G.3 above. (40 CFR section 122.41(m)(4)(ii).)
5. Notice
   a. Anticipated bypass. If the Discharger knows in advance of the need for a bypass, it shall submit a notice, if possible at least 10 days before the date of the bypass. (40 CFR section 122.41(m)(3)(i).)

b. Unanticipated bypass. The Discharger shall submit notice of an unanticipated bypass as required in Standard Provisions - Reporting V.E below (24-hour notice). (40 CFR section 122.41(m)(3)(ii).)

H. Upset

Upset means an exceptional incident in which there is unintentional and temporary noncompliance with technology based permit effluent limitations because of factors beyond the reasonable control of the Discharger. An upset does not include noncompliance to the extent caused by operational error, improperly designed treatment facilities, inadequate treatment facilities, lack of preventive maintenance, or careless or improper operation. (40 CFR section 122.41(n)(1).)

1. Effect of an upset. An upset constitutes an affirmative defense to an action brought for noncompliance with such technology based permit effluent limitations if the requirements of Standard Provisions – Permit Compliance I.H.2 below are met. No determination made during administrative review of claims that noncompliance was caused by upset, and before an action for noncompliance, is final administrative action subject to judicial review. (40 CFR section 122.41(n)(2).)

2. Conditions necessary for a demonstration of upset. A Discharger who wishes to establish the affirmative defense of upset shall demonstrate, through properly signed, contemporaneous operating logs or other relevant evidence that (40 CFR section 122.41(n)(3)):

   a. An upset occurred and that the Discharger can identify the cause(s) of the upset (40 CFR section 122.41(n)(3)(i));

   b. The permitted facility was, at the time, being properly operated (40 CFR section 122.41(n)(3)(ii));

   c. The Discharger submitted notice of the upset as required in Standard Provisions – Reporting V.E.2.b below (24-hour notice) (40 CFR section 122.41(n)(3)(iii)); and

   d. The Discharger complied with any remedial measures required under Standard Provisions – Permit Compliance I.C above. (40 CFR section 122.41(n)(3)(iv).)

3. Burden of proof. In any enforcement proceeding, the Discharger seeking to establish the occurrence of an upset has the burden of proof. (40 CFR section 122.41(n)(4).)

II. STANDARD PROVISIONS – PERMIT ACTION

A. General

This Order may be modified, revoked and reissued, or terminated for cause. The filing of a request by the Discharger for modification, revocation and reissuance, or termination, or a notification of planned changes or anticipated noncompliance does not stay any Order condition. (40 CFR section 122.41(f).)

B. Duty to Reapply

If the Discharger wishes to continue an activity regulated by this Order after the expiration date of this Order, the Discharger must apply for and obtain a new permit. (40 CFR section 122.41(b).)

C. Transfers

This Order is not transferable to any person except after notice to the San Diego Water Board. The San Diego Water Board may require modification or revocation and reissuance of the Order to change the name of the Discharger and incorporate such other requirements as may be necessary under the CWA and the Water Code. (40 CFR sections 122.41(l)(3) and 122.61.)

III. STANDARD PROVISIONS – MONITORING

A. Samples and measurements taken for the purpose of monitoring shall be representative of the monitored activity. (40 CFR section 122.41(j)(1).)

B. Monitoring must be conducted according to test procedures under 40 CFR part 136 or, in the case of sludge use or disposal, approved under 40 CFR part 136 unless otherwise specified in 40 CFR part 503; or unless other test procedures have been specified in this Order. (40 CFR sections 122.41(j)(4) and 122.44(i)(1)(iv).)

IV. STANDARD PROVISIONS – RECORDS

A. Except for records of monitoring information required by this Order related to the Discharger's sewage sludge use and disposal activities, which shall be retained for a period of at least five years (or longer as required by 40 CFR part 503), the Discharger shall retain records of all monitoring information, including all calibration and maintenance records and all original strip chart recordings for continuous monitoring instrumentation, copies of all reports required by this Order, and records of all data used to complete the application for this Order, for a period of at least three (3) years from the date of the sample, measurement, report or application. This period may be extended by request of the San Diego Water Board Executive Officer at any time. (40 CFR section 122.41(j)(2).)

B. **Records of monitoring information shall include:**

1. The date, exact place, and time of sampling or measurements (40 CFR section 122.41(j)(3)(i));
2. The individual(s) who performed the sampling or measurements (40 CFR section 122.41(j)(3)(ii));
3. The date(s) analyses were performed (40 CFR section 122.41(j)(3)(iii));
4. The individual(s) who performed the analyses (40 CFR section 122.41(j)(3)(iv));
5. The analytical techniques or methods used (40 CFR section 122.41(j)(3)(v)); and
6. The results of such analyses. (40 CFR section 122.41(j)(3)(vi).)

C. **Claims of confidentiality for the following information will be denied (40 CFR section 122.7(b)):**

1. The name and address of any permit applicant or Discharger (40 CFR section 122.7(b)(1)); and
2. Permit applications and attachments, permits and effluent data. (40 CFR section 122.7(b)(2).)

V. STANDARD PROVISIONS – REPORTING

A. Duty to Provide Information

The Discharger shall furnish to the San Diego Water Board, State Water Board, or USEPA within a reasonable time, any information which the San Diego Water Board, State Water Board, or USEPA may request to determine whether cause exists for modifying, revoking and reissuing, or terminating this Order, or to determine compliance with this Order. Upon request, the Discharger shall also furnish to the San Diego Water Board, State Water Board, or USEPA copies of records required to be kept by this Order. (40 CFR section 122.41(h); Water Code section 13267.)

B. Signatory and Certification Requirements

1. All applications, reports, or information submitted to the San Diego Water Board, State Water Board, and/or USEPA shall be signed and certified in accordance with Standard Provisions – Reporting V.B.2, V.B.3, V.B.4, and V.B.5 below. (40 CFR section 122.41(k).)
2. All permit applications shall be signed by either a principal executive officer or ranking elected official. For purposes of this provision, a principal executive officer of a federal agency includes: (i) the chief executive officer of the agency, or (ii) a senior executive officer having responsibility for the overall operations of a principal geographic unit of the agency (e.g., Regional Administrators of USEPA). (40 CFR section 122.22(a)(3).).
3. All reports required by this Order and other information requested by the San Diego Water Board, State Water Board, or USEPA shall be signed by a person described in Standard Provisions – Reporting V.B.2 above, or by a duly authorized representative of that person. A person is a duly authorized representative only if:
   a. The authorization is made in writing by a person described in Standard Provisions – Reporting V.B.2 above (40 CFR section 122.22(b)(1));
   b. The authorization specifies either an individual or a position having responsibility for the overall operation of the regulated facility or activity such as the position of plant manager, operator of a well or a well field, superintendent, position of equivalent responsibility, or an individual or position having overall responsibility for environmental matters for the company. (A duly authorized representative may thus be either a named individual or any individual occupying a named position.) (40 CFR section 122.22(b)(2)); and
   c. The written authorization is submitted to the San Diego Water Board and State Water Board. (40 CFR section 122.22(b)(3).)
4. If an authorization under Standard Provisions – Reporting V.B.3 above is no longer accurate because a different individual or position has responsibility for the overall operation of the facility, a new authorization satisfying the requirements of Standard Provisions – Reporting V.B.3 above must be submitted to the San Diego Water Board

and State Water Board prior to or together with any reports, information, or applications, to be signed by an authorized representative. (40 CFR section 122.22(c).)

5. Any person signing a document under Standard Provisions – Reporting V.B.2 or V.B.3 above shall make the following certification:

   "I certify under penalty of law that this document and all attachments were prepared under my direction or supervision in accordance with a system designed to assure that qualified personnel properly gather and evaluate the information submitted. Based on my inquiry of the person or persons who manage the system or those persons directly responsible for gathering the information, the information submitted is, to the best of my knowledge and belief, true, accurate, and complete. I am aware that there are significant penalties for submitting false information, including the possibility of fine and imprisonment for knowing violations." (40 CFR section 122.22(d).)

C. Monitoring Reports

1. Monitoring results shall be reported at the intervals specified in the Monitoring and Reporting Program (Attachment E) in this Order. (40 CFR section 122.41(l)(4).)
2. Monitoring results must be reported on a Discharge Monitoring Report (DMR) form or forms provided or specified by the San Diego Water Board or State Water Board for reporting results of monitoring of sludge use or disposal practices. (40 CFR section 122.41(l)(4)(i).)
3. If the Discharger monitors any pollutant more frequently than required by this Order using test procedures approved under 40 CFR part 136, or another method required for an industry-specific waste stream under 40 CFR subchapters N or O, the results of such monitoring shall be included in the calculation and reporting of the data submitted in the DMR or sludge reporting form specified by the San Diego Water Board. (40 CFR section 122.41(l)(4)(ii).)
4. Calculations for all limitations, which require averaging of measurements, shall utilize an arithmetic mean unless otherwise specified in this Order. (40 CFR section 122.41(l)(4)(iii).)

D. Compliance Schedules

Reports of compliance or noncompliance with, or any progress reports on, interim and final requirements contained in any compliance schedule of this Order, shall be submitted no later than 14 days following each schedule date. (40 CFR section 122.41(l)(5).)

E. Twenty-Four Hour Reporting

1. The Discharger shall report any noncompliance that may endanger health or the environment. Any information shall be provided orally within 24 hours from the time the Discharger becomes aware of the circumstances. A written submission shall also be provided within five (5) days of the time the Discharger becomes aware of the circumstances. The written submission shall contain a description of the noncompliance and its cause; the period of noncompliance, including exact dates and times, and if the noncompliance has not been corrected, the anticipated time it is expected to continue; and steps taken or planned to reduce, eliminate, and prevent reoccurrence of the noncompliance. (40 CFR section 122.41(l)(6)(i).)
2. The following shall be included as information that must be reported within 24 hours under this paragraph (40 CFR section 122.41(l)(6)(ii)):

a. Any unanticipated bypass that exceeds any effluent limitation in this Order. (40 CFR section 122.41(l)(6)(ii)(A).)

b. Any upset that exceeds any effluent limitation in this Order. (40 CFR section 122.41(l)(6)(ii)(B).)

3. The San Diego Water Board may waive the above-required written report under this provision on a case-by-case basis if an oral report has been received within 24 hours. (40 CFR section 122.41(l)(6)(iii).)

F. Planned Changes

The Discharger shall give notice to the San Diego Water Board as soon as possible of any planned physical alterations or additions to the permitted facility. Notice is required under this provision only when (40 CFR section 122.41(l)(1)):

1. The alteration or addition to a permitted facility may meet one of the criteria for determining whether a facility is a new source in part 122.29(b) (40 CFR section 122.41(l)(1)(i)); or

2. The alteration or addition could significantly change the nature or increase the quantity of pollutants discharged. This notification applies to pollutants that are not subject to effluent limitations in this Order. (40 CFR section 122.41(l)(1)(ii).)

3. The alteration or addition results in a significant change in the Discharger's sludge use or disposal practices, and such alteration, addition, or change may justify the application of permit conditions that are different from or absent in the existing permit, including notification of additional use or disposal sites not reported during the permit application process or not reported pursuant to an approved land application plan. (40 CFR section 122.41(l)(1)(iii).)

G. Anticipated Noncompliance

The Discharger shall give advance notice to the San Diego Water Board or State Water Board of any planned changes in the permitted facility or activity that may result in noncompliance with this Order’s requirements. (40 CFR section 122.41(l)(2).)

H. Other Noncompliance

The Discharger shall report all instances of noncompliance not reported under Standard Provisions – Reporting V.C, V.D, and V.E above at the time monitoring reports are submitted. The reports shall contain the information listed in Standard Provision – Reporting V.E above. (40 CFR section 122.41(l)(7).)

I. Other Information

When the Discharger becomes aware that it failed to submit any relevant facts in a permit application, or submitted incorrect information in a permit application or in any report to the San Diego Water Board, State Water Board, or USEPA, the Discharger shall promptly submit such facts or information. (40 CFR section 122.41(l)(8).)

VI. STANDARD PROVISIONS – ENFORCEMENT

The San Diego Water Board is authorized to enforce the terms of this permit under several provisions of the Water Code, including, but not limited to, sections 13385, 13386, and 13387.

VII. ADDITIONAL PROVISIONS – NOTIFICATION LEVELS

All Publicly-Owned Treatment Works (POTWs) shall provide adequate notice to the San Diego Water Board of the following (40 CFR section 122.42(b)):

1. Any new introduction of pollutants into the POTW from an indirect discharger that would be subject to sections 301 or 306 of the CWA if it were directly discharging those pollutants (40 CFR section 122.42(b)(1)); and
2. Any substantial change in the volume or character of pollutants being introduced into that POTW by a source introducing pollutants into the POTW at the time of adoption of the Order. (40 CFR section 122.42(b)(2).)
3. Adequate notice shall include information on the quality and quantity of effluent introduced into the POTW as well as any anticipated impact of the change on the quantity or quality of effluent to be discharged from the POTW. (40 CFR section 122.42(b)(3).)

ATTACHMENT E – MONITORING AND REPORTING PROGRAM

Contents

I. General Monitoring Provisions E-3
II. Monitoring Locations E-4
III. Core Monitoring Requirements E-6
A. Influent Monitoring Requirements E-6
B. Effluent Monitoring Requirements E-9
C. Whole Effluent Toxicity Testing Requirements E-13
D. Land Discharge Monitoring Requirements – Not Applicable E-14
E. Recycling Monitoring Requirements – Not Applicable E-14
IV. Receiving Water Monitoring Requirements E-14
A. Shoreline Water Quality Monitoring Requirements E-15
B. Offshore Water Quality Monitoring Requirements E-16
C. Benthic Monitoring Requirements E-18
D. Fish and Invertebrate Monitoring Requirements E-23
E. Receiving Water Monitoring Reports E-26
V. Regional Monitoring Requirements E-28
A. Kelp Bed Canopy Monitoring Requirements E-29
B. Southern California Bight Monitoring Program Participation Requirements E-30
VI. Special Studies Requirements E-30
Compliance with Bacteriological Standards E-30
VII. Other Monitoring Requirements E-31
A. Facilities Spills E-31
B. Transboundary Wastewater Flows E-31
VIII. Reporting Requirements E-35
A. General Monitoring and Reporting Requirements E-35
B. Self-Monitoring Report (SMR) Submittal E-35
C. Discharge Monitoring Reports (DMR's) E-37
D. Other Reports E-38

Tables

Table E-1. Monitoring Station Locations E-4
Table E-2. Influent Monitoring E-7
Table E-3. Effluent Monitoring E-10
Table E-4. Whole Effluent Toxicity Testing E-13
Table E-5. Approved Test for Chronic Toxicity E-14
Table E-6. Shoreline Monitoring Requirements[2] E-15
Table E-7. Offshore and Kelp/Nearshore Monitoring Requirements E-16
Table E-8. Sediment Monitoring Requirements E-19
Table E-9. Fish Tissue Monitoring Requirements E-24
Table E-10. Spills and Transboundary Wastewater Flow Monitoring E-33
Table E-11. Monitoring Periods and Reporting Schedule E-35
Table E-12. Other Reports E-39

ATTACHMENT E – MONITORING AND REPORTING PROGRAM (MRP)

Section 308 of the federal Clean Water Act (CWA) and sections 122.41(h), (j)-(l), 122.44(i), and 122.48 of title 40 of the Code of Federal Regulations (40 CFR) require that all National Pollutant Discharge Elimination System (NPDES) permits specify monitoring and reporting requirements. California Water Code (Water Code or CWC) sections 13267 and 13383 also authorize the San Diego Water Board to establish monitoring, inspection, entry, reporting, and recordkeeping requirements. Pursuant to this authority this Monitoring and Reporting Program (MRP) establishes conditions for the Discharger to conduct routine or episodic self-monitoring of the discharges regulated under this Order at specified influent, internal operations, effluent, transboundary wastewater flow, and receiving water monitoring locations. The MRP requires the Discharger to report the results to the San Diego Water Board with information necessary to evaluate discharge characteristics and compliance status.

The purpose of the MRP is to determine and ensure compliance with effluent limitations and other requirements established in this Order, assess treatment efficiency, characterize effluents, characterize transboundary wastewater flows, and characterize the receiving water and the effects of the discharge on the receiving water. The MRP also specifies requirements concerning the proper use, maintenance, and installation of monitoring equipment and methods, and the monitoring type intervals and frequency necessary to yield data that are representative of the activities and discharges regulated under this Order.

Each monitoring section contains an introductory paragraph summarizing why the monitoring is needed and the key management questions the monitoring is designed to answer. In developing the list of key management questions the San Diego Water Board considered four basic types of information for each question:

(1) Management Information Need – Why does the San Diego Water Board need to know the answer?

(2) Monitoring Criteria – What monitoring will be conducted for deriving an answer to the question?

(3) Expected Product – How should the answer be expressed and reported?

(4) Possible Management Actions – What actions will be potentially influenced by the answer?

The framework for this monitoring program has three components that comprise a range of spatial and temporal scales: 1. core monitoring, 2. regional monitoring, and 3. special studies.

1. Core monitoring consists of the basic site-specific monitoring necessary to measure compliance with individual effluent limits and/or impacts to receiving water quality. Core monitoring is typically conducted in the immediate vicinity of the discharge by examining local scale spatial effects.
2. Regional monitoring provides information necessary to make assessments over large areas and serves to evaluate cumulative effects of all anthropogenic inputs. Regional monitoring data also assists in the interpretation of core monitoring studies. In the event that a regional monitoring effort takes place during the permit cycle in which the MRP does not specifically address regional monitoring, the San Diego Water Board may allow relief from aspects of core monitoring components in order to encourage participation pursuant to section V.B of this MRP.
3. Special studies are directed monitoring efforts designed in response to specific management or research questions identified through either core or regional monitoring programs. Often they are used to help understand core or regional monitoring results, where a specific environmental process is not well understood, or to address unique issues of local importance.

I. GENERAL MONITORING PROVISIONS

A. Samples and measurements taken as required herein shall be representative of the volume and nature of the monitoring discharge. All samples shall be taken at the monitoring points specified in Section II Table E-1 below and, unless otherwise specified, before the monitored flow joins or is diluted by any other waste stream, body of water, or substance. Monitoring points shall not be changed without notification to and the approval of the San Diego Water Board. Samples shall be collected at times representative of "worst case" conditions with respect to compliance with the requirement of this Order.

B. Appropriate flow measurement devices and methods consistent with accepted scientific practices shall be selected and used to ensure the accuracy and reliability of measurements of the volume of monitored discharges. The devices shall be installed, calibrated and maintained to ensure that the accuracy of the measurement is consistent with the accepted capability of that type of device. Devices selected shall be capable of measuring flows with a maximum deviation of less than ±5 percent from true discharge rates throughout the range of expected discharge volumes.

C. Monitoring must be conducted according to United States Environmental Protection Agency (USEPA) test procedures approved at 40 CFR part 136, Guidelines Establishing Test Procedures for the Analysis of Pollutants Under the Clean Water Act as amended, or unless other test procedures are specified in this Order and attachments thereof or otherwise specified by the San Diego Water Board. Alternative test procedures not specified in this order are also subject USEPA approval.

D. All analyses shall be performed in a laboratory certified to perform such analyses by the California Department of Public Health (CDPH) or a laboratory approved by the San Diego Water Board. The laboratory must be accredited under the CDPH Environmental Laboratory Accreditation Program (ELAP) to ensure the quality of analytical data used for regulatory purposes to meet the requirements of this Order. Additional information on ELAP can be accessed at http://www.cdph.ca.gov/certlic/labs/Pages/ELAP-CAInformation.aspx.

E. Records of monitoring information shall include information required under Attachment D, Standard Provisions, section IV.

F. All monitoring instruments and devices used by the Discharger to fulfill the prescribed monitoring program shall be properly maintained and calibrated as necessary to ensure their continued accuracy. All flow measurement devices shall be calibrated at least once per year, or more frequently, to ensure continued accuracy of the devices.

G. The Discharger shall have, and implement, an acceptable written quality assurance (QA) plan for laboratory analyses. Duplicate chemical analyses must be conducted on a minimum of 10 percent of the samples or at least one sample per month, whichever is greater. A similar frequency shall be maintained for analyzing spiked samples. When requested by USEPA or the San Diego Water Board, the Discharger shall participate in a NPDES discharge monitoring report QA performance study. The Discharger shall have a success rate equal to or greater than 80 percent.

H. Analysis for toxic pollutants, with effluent limitations or performance goals based on water quality objectives of the California Ocean Plan, shall be conducted in accordance with procedures described in the California Ocean Plan and restated in this MRP.

II. MONITORING LOCATIONS

The Discharger shall establish the following monitoring locations to demonstrate compliance with the effluent limitations, discharge specifications, and other requirements in this Order:

Table E-1. Monitoring Station Locations

Discharge Point No.	Monitoring Location Name	Monitoring Location Description
--	INF-001	At a location where all influent wastestream flows to South Bay International Wastewater Treatment Plant (IWTP or Facility) are accounted for in monitoring events; upstream of any in-plant return flows; and where representative samples of influent can be collected before any process or treatment that could alter the properties of the influent. Latitude: 32° 32' 29.94''N; Longitude:117°03' 33.75"W
001	EFF-001	Downstream of any in-plant return flows at the Facility where representative samples of effluent treated at the Facility can be collected, prior to commingling with other discharges contributing to the South Bay Ocean Outfall (SBOO). Latitude: 32° 32' 37.68"N; Longitude:117° 03' 54.83"W
TRANSBOUNDARY STATIONS		
	C1	Goat Canyon Diversion Structure; Approximate Location at Latitude: 32° 32' 13.1994"N; Longitude: 117° 5' 57.516"'W
	C2	Smugglers Gulch Diversion Structure; Approximate Location at Latitude: 32° 32' 23.2794"N; Longitude: 117° 5' 12.8394"W
	C3	Silva Drain Canyon Collector; Approximate Location at Latitude: 32° 32' 22.0554"N; Longitude: 117° 3' 55.4394"W
	C4	Canyon del Sol Collector; Approximate Location at Latitude: 32° 32' 21.0114"N; Longitude: 117° 4' 7.1754"W
	C5	Stewart's Drain Canyon Collector; Approximate Location at Latitude: 32° 32' 25.6914"N; Longitude: 117° 3' 28.1874"W
SHORELINE STATIONS		
--	S-0	Latitude: 32° 25.148'N; Longitude:117°05.837'W Mexico (Southernmost location)
--	S-2	Latitude: 32° 29.922'N; Longitude:117°07.380'W Mexico (Beach south of El Vigia Restaurant)
--	S-3	Latitude: 32° 31.542'N; Longitude:117°07.440'W Mexico (Beach at end of existing road of Playas de Tijuana)
--	S-4	Latitude: 32° 32.118'N; Longitude:117°07.500'W United States (Beach just north of the border fence)
--	S-5	Latitude: 32° 33.468'N; Longitude:117°07.860'W United States (Beach north of mouth of estuary)
--	S-6	Latitude: 32° 33.978'N; Longitude:117°07.980'W United States (Beach at end of Seacoast Drive)
--	S-8	Latitude: 32°38.208'N; Longitude:117°08.640'W United States (Silver Strand State Beach, Area 4 West of Coronado Cays)
--	S-9	Latitude: 32°40.620'N; Longitude:117°10.680'W United States (Beach at end of Avenida Del Sol seaward of Hotel Del Coronado)

Discharge Point No.	Monitoring Location Name	Monitoring Location Description
--	S-10	Latitude: 32°32.598'N; Longitude:117°07.500'W United States (Beach at the terminus of Monument Road)
--	S-11	Latitude: 32°33.678'N; Longitude:117°07.920'W United States (Beach approximately ¾ miles north of the mouth of the Tijuana River)
	S-12	Latitude: 32°35.142'N; Longitude:117°07.980'W United States (Beach at the end of Carnation Street)
OFFSHORE STATIONS[1,2]		
--	I-1	Latitude: 32°28.400'N; Longitude:117°16.620'W; DEPTH 198 ft (60 m)
--	I-2	Latitude: 32°28.400'N; Longitude:117°11.940'W; DEPTH 106 ft (32 m)
--	I-3	Latitude: 32°28.020'N; Longitude:117°10.080'W; DEPTH 89 ft (27 m)[3]
--	I-4	Latitude: 32°28.300'N; Longitude:117°08.400'W; DEPTH 59 ft (18 m)
--	I-5	Latitude: 32°28.300'N; Longitude:117°07.800'W; DEPTH 46 ft (14 m)[4]
--	I-6	Latitude: 32°29.610'N; Longitude:117°09.780'W; DEPTH 86 ft (26 m)
--	I-7	Latitude: 32°31.000'N; Longitude:117°15.180'W; DEPTH 172 ft (52 m)[5]
--	I-8	Latitude: 32°31.000'N; Longitude:117°12.120'W; DEPTH 118 ft (36 m)[6]
--	I-9	Latitude: 32°30.700'N; Longitude:117°10.740'W; DEPTH 96 ft (29 m)[3]
--	I-10	Latitude: 32°31.000'N; Longitude:117°09.360'W; DEPTH 63 ft (19 m)[7]
--	I-11	Latitude: 32°30.800'N; Longitude:117°08.220'W; DEPTH 43 ft (13 m)[4]
--	I-12	Latitude: 32°31.970'N; Longitude:117°10.980'W; DEPTH 92 ft (28 m)[3]
--	I-13	Latitude: 32°32.250'N; Longitude:117°12.720'W; DEPTH 125 ft (38 m)[6]
--	I-14	Latitude: 32°32.580'N; Longitude:117°11.040'W; DEPTH 92 ft (28 m)[3]
--	I-15	Latitude: 32°32.270'N; Longitude:117°11.340'W; DEPTH 102 ft (31 m)
--	I-16	Latitude: 32°32.270'N; Longitude:117°10.980'W; DEPTH 92 ft (28 m)[3]
--	I-17	Latitude: 32°32.270'N; Longitude:117°10.680'W; DEPTH 83 ft (25 m)
--	I-18	Latitude: 32°32.170'N; Longitude:117°09.660'W; DEPTH 63 ft (19 m)[7]
--	I-20	Latitude: 32°33.420'N; Longitude:117°15.420'W; DEPTH 182 ft (55 m)[8]
--	I-21	Latitude: 32°33.640'N; Longitude:117°13.620'W; DEPTH 135 ft (41 m)[6]
--	I-22	Latitude: 32°33.200'N; Longitude:117°11.100'W; DEPTH 92 ft (28 m)[3]
--	I-23	Latitude: 32°33.050'N; Longitude:117°09.900'W; DEPTH 69 ft (21 m)[7]
--	I-27	Latitude: 32°34.450'N; Longitude:117°11.460'W; DEPTH 92 ft (28 m)
--	I-28	Latitude: 32°35.630'N; Longitude:117°15.840'W; DEPTH 182 ft (55 m)
--	I-29	Latitude: 32°35.670'N; Longitude:117°13.380'W; DEPTH 125 ft (38 m)
--	I-30	Latitude: 32°35.720'N; Longitude:117°11.820'W; DEPTH 92 ft (28 m)[3]
--	I-31	Latitude: 32°35.730'N; Longitude:117°10.320'W; DEPTH 63 ft (19 m)
--	I-33	Latitude: 32°37.430'N; Longitude:117°14.220'W; DEPTH 99 ft (30 m)[3]
--	I-34	Latitude: 32°37.800'N; Longitude:117°12.960'W; DEPTH 63 ft (19 m)
--	I-35	Latitude: 32°38.200'N; Longitude:117°10.920'W; DEPTH 63 ft (19 m)
--	I-36	Latitude: 32°38.350'N; Longitude:117°09.240'W; DEPTH 36 ft (11 m)[4]
--	I-37	Latitude: 32°38.880'N; Longitude:117°12.980'W; DEPTH 40 ft (12 m)[4]
--	I-38	Latitude: 32°40.130'N; Longitude:117°11.200'W; DEPTH 36 ft (11 m)[4]
KELP/NEARSHORE STATIONS		
--	I-19	Latitude: 32°32.180'N; Longitude:117°07.740'W; DEPTH 33 ft (10 m)[4]
--	I-24	Latitude: 32°33.400'N; Longitude:117°08.700'W; DEPTH 36 ft (11 m)[4]
--	I-25	Latitude: 32°33.670'N; Longitude:117°08.880'W; DEPTH 30 ft (9 m)[9]
--	I-26	Latitude: 32°34.470'N; Longitude:117°08.820'W; DEPTH 30 ft (9 m)[9]
--	I-32	Latitude: 32°35.680'N; Longitude:117°08.280'W; DEPTH 33 ft (10 m)[9]
--	I-39	Latitude: 32°34.340'N; Longitude:117°10.050'W; DEPTH 59 ft (18 m)[7]
--	I-40	Latitude: 32°33.230'N; Longitude:117°08.170'W; DEPTH 33 ft (10 m)[9]

Discharge Point No.	Monitoring Location Name	Monitoring Location Description
TRAWL STATIONS		
--	SD-15 (Zone 9)	Latitude: 32°28.350'N; 117°10.500'W; DEPTH: 89 ft (27 m)
--	SD-16 (Zone 8)	Latitude: 32°31.000'N; 117°10.720'W; DEPTH: 89 ft (27 m)
--	SD-17 (Zone 5)	Latitude: 32°32.200'N; 117°11.430'W; DEPTH: 99 ft (30 m)
--	SD-18 (Zone 5)	Latitude: 32°32.580'N; 117°11.350'W; DEPTH: 99 ft (30 m)
--	SD-19 (Zone 6)	Latitude: 32°33.500'N; 117°11.080'W; DEPTH: 92 ft (28 m)
--	SD-20 (Zone 6)	Latitude: 32°34.680'N; 117°11.450'W; DEPTH: 96 ft (29 m)
--	SD-21 (Zone 7)	Latitude: 32°36.990'N; 117°12.690'W; DEPTH: 96 ft (29 m)
RIG FISHING STATIONS		
--	RF-3	Latitude: 32°32.270'N; 117°11.000'W; DEPTH: 89 ft (27 m)
--	RF-4	Latitude: 32°25.910'N; 117°17.655'W; DEPTH: 89 ft (27 m)

1. All 40 offshore and kelp/nearshore stations designated I-1 to I-40 are monitored for visual observations, temperature, depth, pH, salinity, dissolved oxygen, light transmittance, and chlorophyll-a as indicated in Table E-7.
2. A total of 28 of the above offshore and kelp/nearshore stations are also monitored for total coliforms, fecal coliforms, and Enterococcus as indicated in Table E-7. These stations include I-3, I-5, I-7 to I-14, I-16, I-18 to I-26, I-30, I-32, I-33, and I-36 to I-40.
3. Discrete depths for fecal indicator bacteria samples include: 2m, 18m, and 27m.
4. Discrete depths for fecal indicator bacteria samples include: 2m, 6m, and 11m.
5. Discrete depths for fecal indicator bacteria samples include: 2m, 18m, and 52m.
6. Discrete depths for fecal indicator bacteria samples include: 2m, 18m, and 37m.
7. Discrete depths for fecal indicator bacteria samples include: 2m, 12m, and 18m.
8. Discrete depths for fecal indicator bacteria samples include: 2m, 18m, and 55m.
9. Discrete depths for fecal indicator bacteria samples include: 2m, 6m, and 9m.

The North latitude and West longitude information in Table E-1 are approximate for administrative purposes.

A map of the shoreline stations, offshore stations, trawl stations, and rig fishing stations monitoring locations is provided in Attachment B of this Order.

III. CORE MONITORING REQUIREMENTS

A. Influent Monitoring Requirements

Influent monitoring is the collection and analysis of samples or measurements of wastewater prior to the treatment processes. Influent monitoring of a wastewater stream prior to entering the treatment plant is necessary to address the following questions:

(1) Is the pretreatment program effectively controlling pollutant loads from industrial facilities?

(2) What is the frequency of unexpected industrial discharges (or pollutants loads) which can cause or contribute to an upset in the wastewater process?

(3) Is the influent inhibiting or disrupting the IWTP, its treatment processes or operations, or its sludge processes, use, or disposal?

(4) Is the influent complying with influent limitations prescribed in the Order?

(5) Is the Facility complying with permit conditions, including but not limited to carbonaceous biochemical oxygen demand (CBOD5) and total suspended solids (TSS) percent removal limitations?

The Discharger shall monitor the influent at Monitoring Location Name INF-001 as follows:

Table E-2. Influent Monitoring

Parameter	Units[1]	Sample Type	Minimum Sampling Frequency	Required Analytical Test Method
Flow	MGD	Recorder/Totalizer	Continuous	--
Carbonaceous Biochemical Oxygen Demand (5-Day at 20°C) ($CBOD_5$)	mg/L	24-hr Composite	1/Day[3,4]	[2]
Biochemical Oxygen Demand (5-day @ 20°C) (BOD_5)	mg/L	24-hr Composite	1/Day[3,4]	[2]
Total Suspended Solids (TSS)	mg/L	24-hr Composite	1/Day[3,4]	[2]
Volatile Suspended Solids	mg/L	24-hr Composite	1/Day[3,4]	[2]
Total Dissolved Solids (TDS)	mg/L	24-hr Composite	1/Week[4,5]	[2]
Temperature	°F	Grab	1/Day[3,4]	[2]
Floating Particulates	mg/L	24-hr Composite	1/Week[5]	[2]
Grease and Oil	mg/L	Grab	1/Week[4,5]	[2]
Settleable Solids	ml/L	Grab	1/Week[5]	[2]
Turbidity	NTU	24-hr Composite	1/Week[5]	[2]
pH	pH Units	Grab	1/Week[5]	[2]
Arsenic, Total Recoverable	µg/L	24-hr Composite	1/Week[4,5]	[2]
Cadmium, Total Recoverable	µg/L	24-hr Composite	1/Week[4,5]	[2]
Chromium (VI) , Total Recoverable[6]	µg/L	24-hr Composite	1/Week[4,5]	[2]
Copper, Total Recoverable	µg/L	24-hr Composite	1/Week[4,5]	[2]
Lead, Total Recoverable	µg/L	24-hr Composite	1/Week[4,5]	[2]
Mercury, Total Recoverable	µg/L	24-hr Composite	1/Week[4,5]	[2]
Nickel, Total Recoverable	µg/L	24-hr Composite	1/Week[4,5]	[2]
Selenium, Total Recoverable	µg/L	24-hr Composite	1/Week[4,5]	[2]
Silver, Total Recoverable	µg/L	24-hr Composite	1/Week[4,5]	[2]
Zinc, Total Recoverable	µg/L	24-hr Composite	1/Week[4,5]	[2]
Cyanide, Total Recoverable	µg/L	24-hr Composite	1/Week[4,5]	[2]
Ammonia (as N)	µg/L	24-hr Composite	1/Month[4,5]	[2]
Phenolic Compounds (nonchlorinated)[1]	µg/L	24-hr Composite	1/Month[4,5]	[2]
Phenolic Compounds (chlorinated)[1]	µg/L	24-hr Composite	1/Month[4,5]	[2]
Endosulfan[1]	µg/L	24-hr Composite	1/Month[4,5]	[2]
Endrin	µg/L	24-hr Composite	1/Month[4,5]	[2]
HCH[1]	µg/L	24-hr Composite	1/Month[4,5]	[2]
Radioactivity	µg/L	24-hr Composite	1/Month[4,5]	[2]
Acrolein	µg/L	Grab	1/Quarter[4,5]	[2]
Antimony, Total Recoverable	µg/L	24-hr Composite	1/Quarter[4,5]	[2]
Bis (2-chloroethoxy) Methane	µg/L	24-hr Composite	1/Quarter[4,5]	[2]

Parameter	Units[1]	Sample Type	Minimum Sampling Frequency	Required Analytical Test Method
Bis (2-chloroisopropyl) Ether	µg/L	Grab	1/Quarter[4,5]	[2]
Chlorobenzene	µg/L	Grab	1/Quarter[4,5]	[2]
Chromium (III), Total Recoverable[6]	µg/L	24-hr Composite	1/Quarter[4,5]	[2]
Di-n-butyl Phthalate	µg/L	24-hr Composite	1/Quarter[4,5]	[2]
Dichlorobenzenes[1]	µg/L	Grab	1/Quarter[4,5]	[2]
Diethyl Phthalate	µg/L	24-hr Composite	1/Quarter[4,5]	[2]
Dimethyl Phthalate	µg/L	24-hr Composite	1/Quarter[4,5]	[2]
4,6-dinitro-2-methylphenol	µg/L	24-hr Composite	1/Quarter[4,5]	[2]
2,4-dinitrophenol	µg/L	24-hr Composite	1/Quarter[4,5]	[2]
Ethylbenzene	µg/L	Grab	1/Quarter[4,5]	[2]
Fluoranthene	µg/L	24-hr Composite	1/Quarter[4,5]	[2]
Hexachlorocyclopentadiene	µg/L	24-hr Composite	1/Quarter[4,5]	[2]
Nitrobenzene	µg/L	Grab	1/Quarter[4,5]	[2]
Thallium, Total Recoverable	µg/L	24-hr Composite	1/Quarter[4,5]	[2]
Toluene	µg/L	Grab	1/Quarter[4,5]	[2]
Tributyltin	µg/L	24-hr Composite	1/Quarter[4,5]	[2]
1,1,1-trichloroethane	µg/L	Grab	1/Quarter[4,5]	[2]
Acrylonitrile	µg/L	Grab	1/Quarter[4,5]	[2]
Aldrin	µg/L	24-hr Composite	1/Quarter[4,5]	[2]
Benzene	µg/L	Grab	1/Quarter[4,5]	[2]
Benzidine	µg/L	24-hr Composite	1/Quarter[4,5]	[2]
Beryllium, Total Recoverable	µg/L	24-hr Composite	1/Quarter[4,5]	[2]
Bis(2-chloroethyl) ether	µg/L	Grab	1/Quarter[4,5]	[2]
Bis(2-ethylhexyl) phthalate	µg/L	24-hr Composite	1/Quarter[4,5]	[2]
Carbon tetrachloride	µg/L	Grab	1/Quarter[4,5]	[2]
Chlordane[1]	µg/L	24-hr Composite	1/Quarter[4,5]	[2]
Chlorodibromomethane (dibromochloromethane)	µg/L	Grab	1/Quarter[4,5]	[2]
Chloroform	µg/L	Grab	1/Quarter[4,5]	[2]
DDT[1]	µg/L	24-hr Composite	1/Quarter[4,5]	[2]
1,4-Dichlorobenzene	µg/L	Grab	1/Quarter[4,5]	[2]
3,3'-Dichlorobenzidine	µg/L	24-hr Composite	1/Quarter[4,5]	[2]
1,2-Dichloroethane	µg/L	Grab	1/Quarter[4,5]	[2]
1,1-Dichloroethylene	µg/L	Grab	1/Quarter[4,5]	[2]
Dichlorobromomethane	µg/L	Grab	1/Quarter[4,5]	[2]
Dichloromethane (Methylene Chloride)	µg/L	Grab	1/Quarter[4,5]	[2]
1,3-Dichloropropene (1,3-Dichloropropylene)	µg/L	Grab	1/Quarter[4,5]	[2]
Dieldrin	µg/L	24-hr Composite	1/Quarter[4,5]	[2]
2,4-Dinitrotoluene	µg/L	24-hr Composite	1/Quarter[4,5]	[2]
1,2-Diphenylhydrazine	µg/L	24-hr Composite	1/Quarter[4,5]	[2]
Halomethanes[1]	µg/L	Grab	1/Quarter[4,5]	[2]
Heptachlor	µg/L	24-hr Composite	1/Quarter[4,5]	[2]
Heptachlor Epoxide	µg/L	24-hr Composite	1/Quarter[4,5]	[2]
Hexachlorobenzene	µg/L	24-hr Composite	1/Quarter[4,5]	[2]
Hexachlorobutadiene	µg/L	24-hr Composite	1/Quarter[4,5]	[2]
Hexachloroethane	µg/L	24-hr Composite	1/Quarter[4,5]	[2]

Parameter	Units[1]	Sample Type	Minimum Sampling Frequency	Required Analytical Test Method
Isophorone	µg/L	24-hr Composite	1/Quarter[4,5]	[2]
N-nitrosodimethylamine	µg/L	24-hr Composite	1/Quarter[4,5]	[2]
N-nitrosodi-N-propylamine	µg/L	24-hr Composite	1/Quarter[4,5]	[2]
N-nitrosodiphenylamine	µg/L	24-hr Composite	1/Quarter[4,5]	[2]
PAHs[1]	µg/L	24-hr Composite	1/Quarter[4,5]	[2]
PCBs[1]	µg/L	24-hr Composite	1/Quarter[4,5]	[2]
TCDD equivalents[1]	µg/L	24-hr Composite	1/Quarter[4,5]	[2]
1,1,2,2-Tetrachoroethane	µg/L	Grab	1/Quarter[4,5]	[2]
Tetrachloroethylene (Tetrachloroethene)	µg/L	Grab	1/Quarter[4,5]	[2]
Toxaphene	µg/L	24-hr Composite	1/Quarter[4,5]	[2]
Trichloroethylene (Trichloroethene)	µg/L	Grab	1/Quarter[4,5]	[2]
1,1,2-Trichloroethane	µg/L	Grab	1/Quarter[4,5]	[2]
2,4,6-Trichlorophenol	µg/L	Grab	1/Quarter[4,5]	[2]
Vinyl Chloride	µg/L	Grab	1/Quarter[4,5]	[2]

1. See Attachment A for definitions of abbreviations and a glossary of common terms used in this Order.
2. As required under 40 CFR part 136.
3. Five days per week except seven days per week for at least one week during July or August of each year.
4. The Discharger shall calculate and report the mass emission rate (MER) of the constituent for each sample taken. The MER shall be calculated in accordance with section VII.I.4 of this Order.
5. The minimum frequency shall be increased from 1/Week to 5/Week, 1/Month to 1/Week, or 1/Quarter to 1/Month, as appropriate, if any result for this parameter exceeds the applicable interim or final influent limitation specified in this Order, as appropriate. The increased minimum frequency of monitoring shall remain in effect until the results of a minimum of four consecutive analyses for this parameter are below all applicable interim or final influent limitation specified in this Order, as appropriate.
6. The Discharger may, at their option, monitor for total recoverable chromium in lieu of total recoverable chromium (III) or total recoverable chromium (VI).

B. Effluent Monitoring Requirements

Effluent monitoring is the collection and analysis of samples or measurements of effluents, after all treatment processes, to determine and quantify contaminants and demonstrate compliance with applicable effluent limitations, standards, and other requirements of this Order.

Effluent monitoring is necessary to address the following questions:

(1) Does the effluent comply with permit effluent limitations, performance goals, and other requirements of this Order, thereby ensuring that water quality standards are achieved in the receiving water?

(2) What is the mass of constituents that are discharged daily, monthly or annually?

(3) Is the effluent concentration or mass changing over time?

(4) Is the Facility being properly operated and maintained to ensure compliance with the conditions of the Order?

The Discharger shall monitor the effluent at Monitoring Location EFF-001 as follows:

Table E-3. Effluent Monitoring

Parameter	Units[1]	Sample Type	Minimum Sampling Frequency	Required Analytical Test Method
Flow	MGD	Recorder/Totalizer	Continuous[2]	--
$CBOD_5$	mg/L	24-hr Composite	1/Day[3,4]	[6]
BOD_5	mg/L	24-hr Composite	1/Day[3,4]	[6]
TSS	mg/L	24-hr Composite	1/Day[3,4]	[6]
Volatile Suspended Solids	mg/L	24-hr Composite	1/Day[3]	[6]
Total Dissolved Solids	mg/L	24-hr Composite	1/Day[3]	[6]
Temperature	°C	Grab	1/Day[3]	[6]
Dissolved Oxygen	mg/L	Grab	1/Week[5]	
Floating Particulates	mg/L	24-hr Composite	1/Day[3]	[6]
Grease and Oil	mg/L	Grab	1/Week[4,5]	[6]
Settleable Solids	mL/L	Grab	1/Day[3]	[6]
Turbidity	NTU	24-hr Composite	1/Day[3]	[6]
pH	pH Units	Grab	1/Day[3]	[6]
TABLE 1 PARAMETERS FOR PROTECTION OF MARINE AQUATIC LIFE				
Arsenic, Total Recoverable	µg/L	24-hr Composite	1/Week[4,5]	[6]
Cadmium, Total Recoverable	µg/L	24-hr Composite	1/ Week[4,5]	[6]
Chromium (VI), Total Recoverable[7]	µg/L	24-hr Composite	1/Week[4,5]	[6]
Copper, Total Recoverable	µg/L	24-hr Composite	1/Week[4,5]	[6]
Lead, Total Recoverable	µg/L	24-hr Composite	1/Week[4,5]	[6]
Mercury, Total Recoverable	µg/L	24-hr Composite	1/Week[4,5]	[6]
Nickel, Total Recoverable	µg/L	24-hr Composite	1/Week[4,5]	[6]
Selenium, Total Recoverable	µg/L	24-hr Composite	1/Week[4,5]	[6]
Silver, Total Recoverable	µg/L	24-hr Composite	1/Week[4,5]	[6]
Zinc, Total Recoverable	µg/L	24-hr Composite	1/Week[4,5]	[6]
Cyanide, Total Recoverable	µg/L	24-hr Composite	1/Week[4,5]	[6,8]
Total Chlorine Residual[9]	µg/L	Grab	1/Day[4]	[6]
Ammonia Nitrogen, Total (as N)	mg/L	24-hr Composite	1/Month[4,5]	[6]
Phenolic Compounds (nonchlorinated)[1]	µg/L	24-hr Composite	1/ Month[4,5]	[6]
Phenolic Compounds (chlorinated)[1]	µg/L	24-hr Composite	1/Month[4,5]	[6]
Endosulfan	µg/L	24-hr Composite	1/ Month[4,5]	[6]
Endrin	µg/L	24-hr Composite	1/ Month[4,5]	[6]
HCH[1]	µg/L	24-hr Composite	1/Month[4,5]	[6]
Radioactivity	pCi/L	24-hr Composite	1/ Month[4,5]	[6]
TABLE 1 PARAMETERS FOR PROTECTION OF HUMAN HEALTH – NONCARCINOGENS				
Acrolein	µg/L	Grab	1/Quarter[4,5]	[6]
Antimony, Total Recoverable	µg/L	24-hr Composite	1/Quarter[4,5]	[6]
Bis (2-chloroethoxy) Methane	µg/L	24-hr Composite	1/Quarter[4,5]	[6]
Bis (2-chloroisopropyl) Ether	µg/L	Grab	1/Quarter[4,5]	[6]
Chlorobenzene	µg/L	Grab	1/Quarter[4,5]	[6]

Parameter	Units[1]	Sample Type	Minimum Sampling Frequency	Required Analytical Test Method
Chromium (III), Total Recoverable[7]	µg/L	24-hr Composite	1/Quarter[4,5]	6
Di-n-butyl Phthalate	µg/L	24-hr Composite	1/Quarter[4,5]	6
Dichlorobenzenes[1]	µg/L	Grab	1/Quarter[4,5]	6
Diethyl Phthalate	µg/L	24-hr Composite	1/Quarter[4,5]	6
Dimethyl Phthalate	µg/L	24-hr Composite	1/Quarter[4,5]	6
4,6-dinitro-2-methylphenol	µg/L	24-hr Composite	1/Quarter[4,5]	6
2,4-dinitrophenol	µg/L	24-hr Composite	1/Quarter[4,5]	6
Ethylbenzene	µg/L	Grab	1/Quarter[4,5]	6
Fluoranthene	µg/L	24-hr Composite	1/Quarter[4,5]	6
Hexachlorocyclopentadiene	µg/L	24-hr Composite	1/Quarter[4,5]	6
Nitrobenzene	µg/L	Grab	1/Quarter[4,5]	6
Thallium, Total Recoverable	µg/L	24-hr Composite	1/Quarter[4,5]	6
Toluene	µg/L	Grab	1/Quarter[4,5]	6
Tributyltin	µg/L	24-hr Composite	1/Quarter[4,5]	6
1,1,1-trichloroethane	µg/L	Grab	1/Quarter[4,5]	6
TABLE 1 PARAMETERS FOR PROTECTION OF HUMAN HEALTH – CARCINOGENS				
Acrylonitrile	µg/L	Grab	1/Quarter[4,5]	6
Aldrin	µg/L	24-hr Composite	1/Quarter[4,5]	6
Benzene	µg/L	Grab	1/Quarter[4,5]	6
Benzidine	µg/L	24-hr Composite	1/Quarter[4,5]	6
Beryllium, Total Recoverable	µg/L	24-hr composite	1/Quarter[4,5]	6
Bis (2-chloroethyl) Ether	µg/L	Grab	1/Quarter[4,5]	6
Bis (2-ethlyhexyl) Phthalate	µg/L	24-hr Composite	1/Quarter[4,5]	6
Carbon Tetrachloride	µg/L	Grab	1/Quarter[4,5]	6
Chlordane[1]	µg/L	24-hr Composite	1/Quarter[4,5]	6
Chlorodibromomethane (dibromochloromethane)	µg/L	Grab	1/Quarter[4,5]	6
Chloroform	µg/L	Grab	1/Quarter[4,5]	6
DDT[1]	µg/L	24-hr Composite	1/Quarter[4,5]	6
1,4-dichlorobenzene	µg/L	Grab	1/Quarter[4,5]	6
3,3'-dichlorobenzidine	µg/L	24-hr Composite	1/Quarter[4,5]	6
1,2-dichloroethane	µg/L	Grab	1/Quarter[4,5]	6
1,1-dichloroethylene	µg/L	Grab	1/Quarter[4,5]	6
Dichlorobromomethane	µg/L	Grab	1/Quarter[4,5]	6
Dichloromethane (Methylene Chloride)	µg/L	Grab	1/Quarter[4,5]	6
1,3-dichloropropene (1,3-Dichloropropylene)	µg/L	Grab	1/Quarter[4,5]	6
Dieldrin	µg/L	24-hr Composite	1/Quarter[4,5]	6
2,4-dinitrotoluene	µg/L	24-hr Composite	1/Quarter[4,5]	6
1,2-diphenylhydrazine	µg/L	24-hr Composite	1/Quarter[4,5]	6
Halomethanes[1]	µg/L	Grab	1/Quarter[4,5]	6
Heptachlor	µg/L	24-hr Composite	1/Quarter[4,5]	6
Heptachlor Epoxide	µg/L	24-hr Composite	1/Quarter[4,5]	6
Hexachlorobenzene	µg/L	24-hr Composite	1/Quarter[4,5]	6
Hexachlorobutadiene	µg/L	24-hr Composite	1/Quarter[4,5]	6
Hexachloroethane	µg/L	24-hr Composite	1/Quarter[4,5]	6
Isophorone	µg/L	24-hr Composite	1/Quarter[4,5]	6

Parameter	Units[1]	Sample Type	Minimum Sampling Frequency	Required Analytical Test Method
N-nitrosodimethylamine	µg/L	24-hr Composite	1/Quarter[4,5]	[6]
N-nitrosodi-N-propylamine	µg/L	24-hr Composite	1/Quarter[4,5]	[6]
N-nitrosodiphenylamine	µg/L	24-hr Composite	1/Quarter[4,5]	[6]
PAHs[1]	µg/L	24-hr Composite	1/Quarter[4,5]	[6]
PCBs[1]	µg/L	24-hr Composite	1/Quarter[4,5]	[6]
TCDD equivalents[1]	µg/L	24-hr Composite	1/Quarter[4,5]	[6]
1,1,2,2-tetrachloroethane	µg/L	Grab	1/Quarter[4,5]	[6]
Tetrachloroethylene (Tetrachloroethene)	µg/L	Grab	1/Quarter[4,5]	[6]
Toxaphene	µg/L	24-hr Composite	1/Quarter[4,5]	[6]
Trichloroethylene (Trichloroethene)	µg/L	Grab	1/Quarter[4,5]	[6]
1,1,2-trichloroethane	µg/L	Grab	1/Quarter[4,5]	[6]
2,4,6-trichlorophenol	µg/L	Grab	1/Quarter[4,5]	[6]
Vinyl Chloride	µg/L	Grab	1/Quarter[4,5]	[6]

1 See Attachment A for definitions of abbreviations and a glossary of common terms used in this Order

2 Report the total daily effluent flow and the monthly average effluent flow.

3 The minimum sampling frequency shall be five days per week and shall increase to seven days per week for at least one week during July or August of each year.

4 The Discharger shall calculate and report the mass emission rate (MER) of the constituent for each sample taken. The MER shall be calculated in accordance with section VII.I.4 of this Order.

5 The minimum frequency shall be increased from 1/Week to 5/Week, 1/Month to 1/Week, or 1/Quarter to 1/Month, as appropriate , if any result for this parameter exceeds the applicable effluent limitation or performance goal specified in this Order. The increased minimum frequency of monitoring shall remain in effect until the results of a minimum of four consecutive analyses for this parameter are below all applicable effluent limitations or performance goals specified in this Order.

6 The analytical test methods for compliance determinations shall use minimum levels specified in Appendix II of the Ocean Plan used as required under 40 CFR part 136. The Discharger shall select minimum levels that are below the effluent limitation or performance goal. If no minimum level value is below the effluent limitation or performance goal, the Discharger shall select the lowest minimum level value and its associated analytical method.

7 The Discharger may, at their option, apply this performance goal as a total chromium performance goal and monitor for total recoverable chromium in lieu of total recoverable chromium (III) or total recoverable chromium (VI).

8 If a Discharger can demonstrate to the satisfaction of the USEPA and the State Water Board that an analytical method is available to reliably distinguish between strongly and weakly complexed cyanide, effluent limitations for cyanide may be met by the combined measurement of free cyanide, simple alkali metals cyanides, and weakly complexed organometallic cyanide complexes. In order for the analytical method to be acceptable, the recovery of free cyanide from metal complexes must be comparable to that achieved by the approved method in 40 CFR part 136.

9 Monitoring of total chlorine residual is required at the frequency specified when any of the treatment units that are the subject of this Order use chlorine for disinfection. Monitoring of total chlorine residual is not required on days when none of the treatment units that are subject to this Order use chlorine for disinfection. If only one sample is collected for total chlorine residual analysis on a particular day, that sample must be collected at the time when the concentration of total chlorine residual in the discharge would be expected to be greatest. The times of chlorine discharges on the days that samples are collected, and the time at which samples are collected, shall be reported.

C. Whole Effluent Toxicity Testing Requirements

Whole effluent toxicity (WET) refers to the overall aggregate toxic effect of an effluent measured directly by an aquatic toxicity test(s). The control of WET is one approach this Order uses to control the discharge of toxic pollutants. WET tests evaluate the 1) aggregate toxic effects of all chemicals in the effluent including additive, synergistic, or antagonistic toxicity effects; 2) the toxicity effects of unmeasured chemicals in the effluent; and 3) variability in bioavailability of the chemicals in the effluent.

Monitoring to assess the overall toxicity of the effluent is required to answer the following questions:

(1) Does the effluent comply with permit effluent limitations for toxicity thereby ensuring that water quality standards are achieved in the receiving water?

(2) If the effluent does not comply with permit effluent limitations for toxicity, are unmeasured pollutants causing risk to aquatic life?

(3) If the effluent does not comply with permit effluent limitations for toxicity, are pollutants in combinations causing risk to aquatic life?

The Discharger shall monitor the effluent at Monitoring Location EFF-001 as follows:

Table E-4. Whole Effluent Toxicity Testing

Monitoring Location	Test	Unit	Sample Type	Minimum Test Frequency
EFF-001	Screening period for chronic toxicity	TU_c	24-hr Composite	Every other year for 3 months, beginning with the calendar year 2014
	Chronic Toxicity	TU_c	24-hr Composite	1/Week
	Acute Toxicity	TUa	24-hr Composite	1/Week

Acute toxicity testing shall be performed using either a marine fish or invertebrate species in accordance with procedures established by the USEPA guidance manual, Methods for Measuring the Acute Toxicity of Effluents and Receiving Waters to Freshwater and Marine Organisms, 5th Edition, October 2002 (EPA-821-R-02-012).

Critical life stage toxicity tests shall be performed to measure chronic toxicity. Testing shall be performed using methods outlined in Short-Term Methods for Estimating the Chronic Toxicity of Effluent and Receiving Waters to West Coast Marine Estuarine Organisms (Chapman, G.A., D.L. Denton, and J.M. Lazorchak, 1995) or Procedures Manual for Conducting Toxicity Tests Developed by the Marine Bioassay Project (State Water Board, 1996).

A screening period for chronic toxicity shall be conducted every other year, beginning with the calendar year 2014. Each screening period shall consist of 3 WET tests, conducted once per month for three consecutive months, with each WET test using a minimum of three test species with approved test protocols, from the following list (from the Ocean Plan). Repeat screening periods may be terminated after the first month if the most sensitive species is the same as the species previously found to be most sensitive. Other tests may be used, if they have been approved for such testing by the State Water Board. The test species shall include a fish, an invertebrate, and an aquatic plant. After the screening period, the most sensitive test species shall be used for the weekly testing. The regular minimum test frequency for chronic toxicity of once per week shall continue prior to, during, and after each screening period. Control and dilution water should be receiving water or lab water as appropriate. If the dilution water is different from the culture water, then culture water should be used in a second control. The sensitivity of the test organisms to a reference toxicant shall be determined

concurrently with each bioassay test and reported with test results. The Discharger shall follow the requirements under Special Provisions, section VI.C.2.e of this Order if any effluent limitations for toxicity are exceeded.

Table E-5. Approved Test for Chronic Toxicity

Species	Test	Tier [1]	Reference[2]
giant kelp, *Macrocystis pyrifera*	percent germination; germ tube length	1	a, c
red abalone, *Haliotis rufescens*	abnormal shell development	1	a, c
oyster, *Crassostrea gigas*; mussels, *Mytilus spp*.	abnormal shell development; percent survival	1	a, c
urchin, *Strongylocentrotus purpuratus*; sand dollar, *Dendraster excentricus*	percent normal development	1	a, c
urchin, *Strongylocentrotus purpuratus*; sand dollar, *Dendraster excentricus*	percent fertilization	1	a, c
Mysid shrimp, *Holmesimysis costata*	percent survival; growth	1	a, c
Mysid shrimp, *Mysidopsis bahia*	percent survival; fecundity	2	b, d
topsmelt, *Atherinops affinis*	larval growth rate; percent survival	1	a, c
Silversides, *Menidia beryllina*	larval growth rate; percent survival	2	b, d

[1] First tier methods are preferred for compliance monitoring. If first tier organisms are not available, the Discharger can use a second tier test method following approval by the San Diego Water Board.

[2] Protocol References:

a. Chapman, G.A., D.L. Denton, and J.M. Lazorchak. 1995. Short-term Methods for Estimating the Chronic Toxicity of Effluents and Receiving Waters to West Coast Marine and Estuarine Organisms. USEPA Report No. EPA/600/R-95/136.

b. Klemm, D.J., G.E. Morrison, T.J. Norberg-King, W.J. Peltier, and M.A. Heber. 1994. Short-term Methods for Estimating the Chronic Toxicity of Effluents and Receiving Water to Marine and Estuarine Organisms. USEPA Report No. EPA-600-4-91-003.

c. SWRCB 1996. Procedures Manual for Conducting Toxicity Tests Developed by the Marine Bioassay Project. 96-1WQ.

d. Weber, C.I., W.B. Horning, I.I., D.J. Klemm, T.W. Nieheisel, P.A. Lewis, E.L. Robinson, J. Menkedick and F. Kessler 9eds). 1998. Short-term Methods for Estimating the Chronic Toxicity of Effluents and Receiving Waters to Marine and Estuarine Organisms. EPA/600/4-87/028. National Information Service, Springfield, VA.

D. Land Discharge Monitoring Requirements – Not Applicable

E. Recycling Monitoring Requirements – Not Applicable

IV. RECEIVING WATER MONITORING REQUIREMENTS

The receiving water and sediment monitoring requirements set forth below are designed to measure the effects of the SBOO discharge on the receiving ocean waters. The overall receiving water monitoring program is intended to answer the following questions:

(1) Does the receiving water meet water quality standards?

(2) Are the receiving water conditions getting better or worse over time?

(3) What is the relative contribution of the Facility discharge to pollution in the receiving water?

Receiving water and sediment monitoring in the vicinity of the SBOO shall be conducted as specified below. This program is intended to document conditions within the waste field in the vicinity of the zone of initial dilution (ZID) boundary, at reference stations, and at areas beyond

the ZID where discharge impacts might be reasonably expected. Station location, sampling, sample preservation and analyses, when not specified, shall be by methods approved by the San Diego Water Board. The monitoring program may be modified by the San Diego Water Board at any time. The Discharger may also submit a list of proposed changes with supporting rationale to these monitoring requirements that it considers to be appropriate to the San Diego Water Board for approval.

The receiving water and sediment monitoring program for the SBOO may be conducted jointly with other dischargers to the SBOO.

During monitoring events sample stations shall be located using a land-based microwave positioning system or a satellite positioning system such as global positioning system (GPS). If an alternate navigation system is proposed, its accuracy should be compared to that of microwave and satellite based systems, and any compromises in accuracy shall be justified.

In the event that the Discharger is unable to obtain a sample from a monitoring station(s) located in Mexico, due to safety, legal, or other reasons, collection of samples at such station(s) can be omitted. In the event that a monitoring location is omitted, the Discharger shall submit a statement to the San Diego Water Board containing, at a minimum, the following information:

1. The monitoring station(s) that was omitted;
2. The date the monitoring station was omitted; and
3. A description of the circumstances for omitting the collection of data at the monitoring station.

A. Shoreline Water Quality Monitoring Requirements

As ocean surface waves come closer to shore they break, forming the foamy, bubbly surface called surf. The region of breaking waves defines the shoreline.

Monitoring of the shoreline is intended to answer the following questions:

(1) Does the effluent cause or contribute to an exceedance of the water quality standards in the receiving water?

(2) Does the effluent reach water contact zones or commercial shellfish beds?

(3) Are densities of bacteria in water contact areas below levels protective of public health?

All shoreline stations shall be monitored as follows:

Table E-6. Shoreline Monitoring Requirements[2]

Parameter	Units	Stations	Sample Type	Sampling Frequency
Visual Observations	--	S0, S2-S6, S8-S12	Visual	[1]
Temperature	°C	S0, S2-S6, S8-S12	Grab	1/Week
Total and Fecal Coliforms; Enterococcus[3]	colony forming units (CFU)/100 mL	S0, S2-S6, S8-S12	Grab	1/Week

1 Visual observations of the surface water conditions at the designated receiving water stations shall be conducted in such a manner as to enable the observer to describe and report the presence, if any, of floatables of sewage origin. Observations of wind (direction and speed), weather (cloudy, sunny, or rainy), direction of current, tidal conditions (high or low), water color, discoloration, oil and grease, turbidity, and odor shall be recorded. These observations shall be taken whenever a sample is collected. Visual observations shall also be conducted for repeat sampling.

2. See Attachment A for definitions of abbreviations and a glossary of common terms used in this Order.

3. If a single sample exceeds any of the single sample maximum (SSM) bacterial standards contained in section V.A.1.a.ii of this Order, repeat sampling at that location shall be conducted to determine the extent and persistence of

the exceedance. Repeat sampling shall be conducted within 24 hours of receiving analytical results and continued until the sample result is less than the SSM standard or until a sanitary survey is conducted to determine the source of the high bacterial densities.

When repeat sampling is required because of an exceedance of any one single sample density, values from all samples collected during that 30-day period will be used to calculate the geometric mean. Repeat sampling is not required for the stations located in Mexico.

Sample Station Omission Due to Storm Condition (including required repeat sampling). In the event of stormy weather which makes sampling hazardous at certain shoreline stations, collection of samples at such stations can be omitted, provided that such omissions do not occur more than 5 days in any calendar year or occur at consecutive sampling times, or provided that a written request from the Discharger is approved by the Executive Officer in writing. The visual observations listed in footnote no. 1 above shall still be recorded and reported to the San Diego Water Board for these stations at the time the sample was attempted to be collected. If practicable, an effort should be made to return to the sampling station that was omitted and collect the sample during calmer conditions within the same reporting period.

B. Offshore Water Quality Monitoring Requirements

Offshore monitoring extends from south of the international border to Point Loma. See Attachment B for a map of the offshore monitoring stations.

Offshore monitoring is necessary to answer the following questions:

(1) Is natural light significantly reduced at any point outside the ZID as a result of the discharge?

(2) Does the discharge cause a discoloration of the ocean surface?

(3) Does the discharge of oxygen demanding waste cause the dissolved oxygen concentration to be depressed at any time more than 10 percent from that which occurs naturally outside the ZID?

(4) Does the discharge of waste cause the pH to change at any time more than 0.2 units from that which occurs naturally outside the ZID?

(5) Is the wastewater plume encroaching upon receiving water areas used for swimming, surfing, diving and shellfish harvesting?

(6) What is the fate of the discharge plume?

1. Offshore receiving water monitoring shall be conducted as follows:

Table E-7. Offshore and Kelp/Nearshore Monitoring Requirements

Parameter	Units	Sample Type	Sampling Frequency[1,2]	
			Offshore	Kelp/Nearshore
Visual Observations	--	Visual	[3]	[3]
Temperature and Depth[4]	°C, feet	Profile	1/Quarter	1/Week
pH[4]	units	Profile	1/Quarter	1/Week
Salinity[4]	parts per thousand	Profile	1/Quarter	1/Week
Dissolved Oxygen[4]	mg/L	Profile	1/Quarter	1/Week
Light Transmittance[4]	Percent	Profile	1/Quarter	1/Week
Chlorophyll a[4]	ug/L	Profile	1/Quarter	1/Week
Total Coliforms	CFU/100 mL	Grab	1/Quarter	1/Week
Fecal Coliforms	CFU/100 mL	Grab	1/Quarter	1/Week
Enterococcus	CFU/100 mL	Grab	1/Quarter	1/Week

1 Quarterly receiving water monitoring results shall be submitted within the monthly SMR for the month in which the monitoring was conducted.
2 Shall be monitored at all applicable discrete depths specified for bacterial monitoring in Table E-1 of this MRP.
3 Visual observations of the surface water conditions at the designated receiving water stations shall be conducted in such a manner as to enable the observer to describe and report the presence, if any, of floatables of sewage origin. Observations of wind (direction and speed), weather (cloudy, sunny, or rainy), direction of current, tidal conditions (high or low), water color, oil and grease, turbidity, and odor shall be recorded. These observations shall be taken whenever a sample is collected.
4 Temperature, depth, pH, salinity, dissolved oxygen, light transmittance, and chlorophyll a profile data shall be measured throughout the entire water column during the quarterly and weekly sampling events.

Sample Station Omission Due to Storm Condition. In the event of stormy weather which makes sampling hazardous at certain offshore stations, collection of samples at such stations can be omitted, provided that such omissions do not occur more than 5 days in any calendar year or occur at consecutive sampling times, or provided that a written request from the Discharger is approved by the Executive Officer in writing. The visual observations listed in footnote no. 1 above shall still be recorded and reported to the San Diego Water Board for these stations at the time the sample was attempted to be collected. If practicable, an effort should be made to return to the sampling station that was omitted and collect the sample during calmer conditions within the same reporting period.

2. Plume Tracking

a. Plume Tracking Monitoring Plan (PTMP). By March 30, 2018, the Discharger shall, in consultation with the San Diego Water Board, prepare and submit a PTMP to implement an ongoing program designed to map dispersion and fate of the wastewater plume discharged from the SBOO. The PTMP shall include, but is not limited to, the following elements.

i. Installation and operation by the Discharger of a permanent, real-time oceanographic mooring system located near the terminal diffuser wye structure of the SBOO. The mooring system shall be designed to measure, at minimum, direction and velocity of subsurface currents, and ocean stratification.

ii. Development of a work plan or pilot study (special study) for implementation of the SBOO real-time mooring system, including data acquisition and processing.

iii. Networking the SBOO system to be compatible with a similar system being deployed by the Discharger near the Point Loma Ocean Outfall (PLOO) discharge site, as well as a third system operated by the University of California San Diego, Scripps Institution of Oceanography in the coastal waters off the City of Del Mar.

iv. Development of a work plan or pilot study (special study) for utilizing advanced oceanographic sampling technologies such as an autonomous underwater vehicle (AUV) or remotely operated towed vehicle (ROTV) in conjunction with the SBOO real-time mooring system to enhance collection of water quality data in real-time and provide higher resolution maps of plume location and movement.

b. Plume Tracking Implementation. The Discharger shall implement the PTMP within sixty (60) days after submission in accordance with the scheduled contained in the PTMP unless otherwise directed by the San Diego Water Board.

c. Plume Tracking Reporting. The Discharger shall submit reports to the San Diego Water Board on the SBOO real-time mooring system and associated pilot studies (e.g., AUV/ROTV surveys) biennially in accordance with the due dates specified in Table E-11 for the Biennial Receiving Waters Monitoring and Assessment Report. These reports shall include in-depth discussion, evaluation, interpretation, and tabulation of the real-time mooring and other project data. Report interpretations and conclusions shall include the state of the receiving waters into which the SBOO discharges and the estimated location of the SBOO plume throughout the reporting period, Additional project progress reports may also be required per approved work plan schedules.

C. Benthic Monitoring Requirements

Seafloor sediments integrate constituents that are discharged to the ocean. Most particles that come from the SBOO discharge, and any associated contaminants, will eventually settle to the seafloor where they are incorporated into the existing sediments. Sediments can accumulate these particles over the years until the point where sediment quality is degraded and beneficial uses are impaired.

Benthic organisms are strongly affected by sediment contaminant exposure because these organisms often live in continual direct contact with sediment/pore water, and many species ingest significant quantities of sediment as a source of nutrition. Because the benthos are dependent on their surroundings, they serve as a biological indicator that reflects the overall conditions of the aquatic environment.

The assessment of sediment quality with respect to sediment chemistry, sediment toxicity and benthic community condition is necessary to answer the following questions:

(1) Is the dissolved sulfide concentration of waters in sediments significantly increased above that present under natural conditions?

(2) Is the concentration of substances, set forth in Table 1 of the Ocean Plan for protection of marine aquatic life, in marine sediments at levels which would degrade the benthic community?

(3) Is the concentration of organic pollutants in marine sediments at levels that would degrade the benthic community?

(4) Are benthic communities degraded as a result of the discharge?

(5) Is the sediment quality changing over time?

The assessment of sediment quality to evaluate potential effects of the SBOO discharge and compliance with narrative water quality standards specified in the Ocean Plan consist of the measurement and integration of three lines of evidence: 1) physical and chemical properties of seafloor sediments, 2) seafloor sediment toxicity to assess bioavailability and toxicity of sediment contaminants, and 3) ecological status of the biological communities (benthos) that live in or on the seafloor sediments.

1. Sediment Assessment for Physical and Chemical Properties

a. ***Sediment Sampling Stations and Monitoring Frequency***. The core sediment monitoring program is designed to assess spatial and temporal trends at 27 of the offshore stations listed in Table E-1, including 12 primary stations located along the outfall discharge depth contour (i.e., stations I2, I3, I6, I9, I12, I14, I15, I16, I22, I27, I30, I33) and 15 secondary stations located at other depths (i.e., stations I1, I4, I7, I8, I10, I13, I18, I20, I21, I23, I28, I29, I31, I34, I35). At the discretion of the San Diego

Water Board, the requirement for sampling the secondary stations may be relaxed to allow Discharger participation in Southern California Bight Regional Monitoring efforts, or to reallocate resources to accommodate approved Strategic Process Studies. Sediment samples shall be collected twice per year during the Winter (e.g., January) and Summer (e.g., July) at each of the 27 offshore stations described above and in Table E-1 in order to assess benthic habitat condition in terms of physical and chemical composition (e.g., grain-size distribution, sediment chemistry).

b. ***Sediment Sample Collection Methods***. Sediment samples shall be taken using a 0.1-square meter modified Van Veen grab sampler. Samples for grain-size and chemical analyses shall be collected from within the upper two centimeters of the surface sediment. Bulk sediment chemical analysis shall include at a minimum the set of constituents listed in Table E-8 below.

c. **Sediment Chemistry*.*** Sediment chemistry is the measurement of the concentration of chemicals of concern in sediments. The chemistry line of evidence is used to assess the potential overall exposure risk to benthic organisms from pollutants in surficial sediments. Chemical analysis of sediment shall be conducted using USEPA approved methods, methods developed by the National Oceanic and Atmospheric Administration's (NOAA's) *National Status and Trends for Marine Environmental Quality*, or methods developed in conjunction with the Southern California Bight Regional Monitoring Program. For chemical analysis of sediment, samples shall be reported on a dry weight basis.

Sediment monitoring for physical and chemical properties shall be conducted at the 27 offshore benthic stations listed above in Section IV.C.1.a of this MRP as follows:

Table E-8. Sediment Monitoring Requirements

Determination	Units	Type of Sample	Minimum Frequency
Sediment grain size	µm	Grab	2/Year
Total Organic Carbon	Percent	Grab	2/Year
Total Nitrogen	Percent	Grab	2/Year
Acid Volatile Sulfides	mg/kg	Grab	2/Year
Aluminum	mg/kg	Grab	2/Year
Antimony	mg/kg	Grab	2/Year
Arsenic	mg/kg	Grab	2/Year
Cadmium	mg/kg	Grab	2/Year
Chromium	mg/kg	Grab	2/Year
Copper	mg/kg	Grab	2/Year
Iron	mg/kg	Grab	2/Year
Lead	mg/kg	Grab	2/Year
Manganese	mg/kg	Grab	2/Year
Mercury	mg/kg	Grab	2/Year
Nickel	mg/kg	Grab	2/Year
Selenium	mg/kg	Grab	2/Year
Silver	mg/kg	Grab	2/Year
Tin	mg/kg	Grab	2/Year
Zinc	mg/kg	Grab	2/Year
PCBs	ng/kg	Grab	2/Year
2,4-DDD	ng/kg	Grab	2/Year
4,4-DDD	ng/kg	Grab	2/Year
2,4-DDE	ng/kg	Grab	2/Year
4,4-DDE	ng/kg	Grab	2/Year
2,4-DDT	ng/kg	Grab	2/Year

Determination	Units	Type of Sample	Minimum Frequency
4,4-DDT	ng/kg	Grab	2/Year
Aldrin	ng/kg	Grab	2/Year
Alpha-Chlordane	ng/kg	Grab	2/Year
Dieldrin	ng/kg	Grab	2/Year
Endosulfan	ng/kg	Grab	2/Year
Endrin	ng/kg	Grab	2/Year
Gamma-BHC	ng/kg	Grab	2/Year
Heptachlor	ng/kg	Grab	2/Year
Heptachlor Epoxide	ng/kg	Grab	2/Year
Hexachlorobenzene	ng/kg	Grab	2/Year
Mirex	ng/kg	Grab	2/Year
Trans-Nonachlor	ng/kg	Grab	2/Year
Acenapthene	µg/kg	Grab	2/Year
Acenaphthylene	µg/kg	Grab	2/Year
Anthracene	µg/kg	Grab	2/Year
Benzo(a)anthracene	µg/kg	Grab	2/Year
Benzo(o)fluoranthene	µg/kg	Grab	2/Year
Benzo(k)fluoranthene	µg/kg	Grab	2/Year
Benzo(ghi)pyrelene	µg/kg	Grab	2/Year
Benzo(a)pyrene	µg/kg	Grab	2/Year
Benzo(e)pyrene	µg/kg	Grab	2/Year
Biphenyl	µg/kg	Grab	2/Year
Chrysene	µg/kg	Grab	2/Year
Dibenz(ah)anthraces	µg/kg	Grab	2/Year
Fluoranthene	µg/kg	Grab	2/Year
Fluorene	µg/kg	Grab	2/Year
Ideno(123cd)pyrene	µg/kg	Grab	2/Year
Naphthalene	µg/kg	Grab	2/Year
1-Methylnaphthalene	µg/kg	Grab	2/Year
2-Methylnaphthalene	µg/kg	Grab	2/Year
2,6-Dimethylnaphthalene	µg/kg	Grab	2/Year
2,3,5-Trimethylnaphthale	µg/kg	Grab	2/Year
Perylene	µg/kg	Grab	2/Year
Phenanthrene	µg/kg	Grab	2/Year
1-Methylphenanthene	µg/kg	Grab	2/Year
Pyrene	µg/kg	Grab	2/Year

2. **Sediment Toxicity**

a. ***Sediment Toxicity Monitoring Plan.*** Sediment toxicity is a measure of the response of invertebrates exposed to surficial sediments under controlled laboratory conditions. The sediment toxicity line of evidence is used to assess both pollutant related biological effects and exposure. Within 180 days of the effective date of this permit, the Discharger shall, in consultation with the City of San Diego, the San Diego Water Board, and the State Water Board, prepare and submit a Sediment Toxicity Monitoring Plan to implement an on-going acute sediment toxicity monitoring program in conformance with the requirements of Ocean Plan Appendix III, Standard Monitoring Procedures, Aquatic Life Toxicity. The Monitoring Plan shall include the following elements:

i. Quality Assurance Project Plan. An ELAP approved Quality Assurance Project Plan (QAPP) describing the project objectives and organization, functional activities, and quality assurance/quality control protocols for the sediment monitoring.

ii. Toxicity Testing Protocols. The Ocean Plan requires that acute toxicity testing be conducted utilizing alternative amphipod species (*Eohaustorius estuarius, Leptocheirus plumulosus, Rhepoxynius abronius*).

iii. Spatial Representation. The Sediment Toxicity Monitoring Plan shall be designed to ensure that the sample stations are spatially representative of the sediment within the region of interest. The locations, type, and number of samples shall be identified and shown on a map

iv. Existing Data and Information. The Sediment Toxicity Monitoring Plan design shall take into consideration existing data and information of appropriate quality.

v. Monitoring Frequency. The Sediment Toxicity Monitoring Plan shall include a schedule for all sample collection and analysis and reporting of results to the San Diego Water Board.

vi. Analysis. The Sediment Toxicity Monitoring Plan shall provide for evaluation, interpretation and tabulation of the sediment monitoring data including interpretations and conclusions as to whether applicable Receiving Water Limitations in this Order have been attained at each sample station**.**

b. ***Sediment Toxicity Monitoring Plan Implementation***. The Discharger shall implement the Sediment Toxicity Monitoring Plan sixty (60) days after submission in accordance with the schedule contained in the Sediment Toxicity Monitoring Plan unless otherwise directed in writing by the San Diego Water Board. Before beginning sample collection activities, the Discharger shall comply with any conditions set by the San Diego Water Board.

3. **Benthic Community Condition**

a. ***Benthic Community Sampling Stations and Frequency*****.** Sediment samples for assessment of benthic community structure shall be collected twice per year during Winter (e.g., January) and Summer (e.g., July) at each of the 27 offshore stations described above for sediments. One sample per station shall be collected for analysis of benthic community structure.

b. ***Benthic Community Sample Collection Methods.*** Benthic community samples shall be collected using the guidance specified in the most recent field manual developed for the Southern California Bight Regional Monitoring Program. The benthic samples shall be collected using a 0.1-square meter modified Van Veen grab sampler. These grab samples shall be separate from (but adjacent to as much as possible) samples collected for sediment grain-size and chemistry analyses. The samples shall be sieved using a 1.0-millimeter mesh screen. The benthic organisms retained on the sieve shall be fixed in 10 percent buffered formalin, and transferred to at least 70 percent ethanol within two to seven days of storage. Benthic organisms, obtained during benthic monitoring shall be counted and identified to as low a taxon as possible.

c. ***Benthic Community Analysis.*** Analysis of benthic community structure shall include determination of the number of species, number of individuals per species,

and total numerical abundance present. The following parameters or metrics shall be calculated for each 0.1-square meter grab sample and summarized by station as appropriate.

i. Number of species

ii. Total numerical abundance

iii. Benthic Response Index (BRI)

iv. Swartz's 75 percent dominance index

v. Shannon-Weiner's diversity index (H)

vi. Pielou eveness index (J)

In addition to summarizing the above community structure parameters at each station, a more rigorous assessment shall be performed as detailed in this MRP, section IV.E.

d. ***Benthic Random Sampling.*** This MRP, the MRP for the PLOO, and the MRP for the South Bay Water Reclamation Plant (SBWRP)[1] require the City of San Diego and the Discharger to sample and analyze annually for sediment chemistry and benthic community conditions at an additional array of 40 randomly selected stations. The same sampling and processing procedures must be followed as outlined above for core benthic sediment and benthic community condition monitoring. These stations shall be reselected each year by USEPA or their designee to meet the requirements for this MRP, the MRP for the PLOO, and the MRP for the SBWRP using the USEPA probability-based Environmental Monitoring and Assessment Program (EMAP) design. The area of coverage shall extend from the mouth of the San Dieguito River south to the USA/Mexico border.

The random benthic sampling requirement may be suspended as part of a resource exchange agreement to allow for participation in the Southern California Bight Regional Monitoring Surveys at the discretion of the Executive Officer as specified in section II.R of this Order.

[1] Order No. R9-2017-0007, NPDES No. CA0107409, Waste Discharge Requirements and National Pollutant Discharge Elimination System Permit for the City of San Diego E.W. Blom Point Loma Wastewater Treatment Plant Discharge to the Pacific Ocean through the Point Loma Ocean Outfall, Monitoring and Reporting Program (Attachment E)
Order No. R9-2013-0006 as amended by Order Nos. R9-2014-0071 and R9-2017-0023, NPDES Permit No. CA0109045, Waste Discharge Requirements for the City of San Diego South Bay Water Reclamation Plant, Discharge to the Pacific Ocean via the South Bay Ocean Outfall, Monitoring and Reporting Program (Attachment E)

D. Fish and Invertebrate Monitoring Requirements

Many pollutants discharged into receiving waters have the potential to bioaccumulate and persist in tissues of aquatic organisms, including marine fishes. Chemical pollutants that bioaccumulate tend to magnify in concentration as they pass through the aquatic food chain. Therefore, fish monitoring data is required to assess the human health risks for individuals who may consume fish and to assess trends of contaminants levels in the receiving water over time.

Aquatic invertebrates are excellent indicators of ecosystem health because they are ubiquitous, abundant, diverse, and typically sedentary. The growth, survival, and reproduction of many species of aquatic invertebrates are all sensitive to changes in environmental health, making analysis of assemblage structure a good ecosystem monitoring tool.

Fish and invertebrate monitoring is necessary to answer the following questions:

(1) Does the concentration of pollutants in fish, shellfish, or other marine organisms used for human consumption bioaccumulate to levels that are harmful to human health?

(2) Does the concentration of pollutants in marine life bioaccumulate to levels that degrade marine communities?

(3) Are the concentrations of pollutants in fish and other marine organisms changing over time?

(4) Is the health of fish changing over time?

(5) Are the populations of selected species of fish and invertebrates changing over time?

1. Fish and Invertebrate Trawls

a. **Fish and Invertebrate Trawl Frequency and Monitoring Stations.** Epibenthic trawls shall be conducted to assess the structure of demersal fish and megabenthic invertebrate communities, while the presence of priority pollutants in fish will be analyzed from species captured using both trawling and rig fishing techniques (see section IV.D.2 for more information). Single community trawls for fish and invertebrates shall be conducted semi-annually in the winter (e.g., January) and summer (e.g., July) at seven trawl stations designated SD15–SD21 at the locations specified in Table E-1. These stations represent two areas near Discharge Point No. 001 (stations SD-17 and SD-18), two areas up coast of Discharge Point No. 001 (stations SD-19, SD-20, and SD-21), and two areas down coast of Discharge Point No. 001 (stations SD 15 and SD-16). Trawls shall be conducted using a Marinovich 7.62 m (25 ft) head rope otter trawl, using the guidance specified in the most recent field manual developed for the Southern California Bight Regional Monitoring Program. All trawl-captured fishes and megabenthic invertebrates shall be identified at each station.

In order to minimize negative impacts that may occur due to unsuccessful trawling efforts associated with unusual environmental conditions, the requirement to conduct trawls during any given period may be postponed or waived at the discretion of the Executive Officer of the San Diego Water Board, in concurrence with USEPA, upon receipt of written justification provided by the Discharger. Examples of such unusual events include the presence of large populations of pelagic red crabs (*Pleuroncodes planipes*) associated with El Niño and the occurrence of large squid egg masses that prevent hauling in the trawl nets.

b. **Fish and Invertebrate Community Structure Analysis.** All fish and megabenthic invertebrates collected by trawls should be identified to species if possible. For fish, community structure analysis shall consist of determining the standard length and total wet weight, total number of individuals per species, the total numerical abundance of all fish, species richness, species diversity (H'), and multivariate pattern analyses (e.g., ordination and classification analyses). The presence of any physical abnormalities or disease symptoms (e.g., fin erosion, external lesions, tumors) or external parasites shall also be recorded. For invertebrates, community structure shall be summarized as the total number of individuals per species, the total numerical abundance of all invertebrates, species richness, and species diversity (H').

c. **Fish Tissue Chemical Analysis.** Chemical analyses of fish tissues shall be performed annually (e.g., during October) on target species collected at or near the trawl stations. The seven stations are classified into five zones for the purpose of collecting sufficient numbers of fish for tissue analyses. Trawl Zone 5 represents the nearfield zone, defined as the area within a 1-km radius of stations SD-17 and/or SD-18; Trawl Zone 6 represents the north farfield zone, defined as the area within a 1-km radius of stations SD-19 and/or SD-20; Trawl Zone 7 represents the far-north farfield zone, defined as the area within a 1-km radius of station SD-21; Trawl Zone 8 represents the south farfield zone, defined as the area within a 1-km radius of station SD-16; Trawl Zone 9 represents the far-south farfield zone, defined as the area within a 1-km radius of station SD-15. There are no depth requirements for these five zones with regards to the collection of fishes for tissue analysis.

Liver tissues shall be analyzed during each survey from fishes collected in each of the above five trawl zones. No more than a maximum of five 10-minute (bottom time) trawls shall be required per zone in order to acquire sufficient numbers of fish for composite samples; these trawls may occur anywhere within a defined zone. If sufficient numbers of trawl zone target species cannot be, or are unlikely to be, captured by trawling, fish for tissue analysis from these areas may be collected using alternative methods such as those described below under Rig Fishing in section IV.D.2.b of this MRP (e.g., hook and line, baited lines). Three replicate composite samples shall be prepared from each trawl zone, with each composite consisting of tissues from at least three individual fish of the same species. These liver tissues shall be analyzed for the constituents listed in Table E-9 below.

Table E-9. Fish Tissue Monitoring Requirements

Determination	Units	Type of Sample	Minimum Frequency
Total Lipids	µg/kg	Composite	Annual
Aluminum	mg/kg	Composite	Annual
Antimony	mg/kg	Composite	Annual
Arsenic	mg/kg	Composite	Annual
Cadmium	mg/kg	Composite	Annual
Chromium	mg/kg	Composite	Annual
Copper	mg/kg	Composite	Annual
Iron	mg/kg	Composite	Annual
Lead	mg/kg	Composite	Annual
Manganese	mg/kg	Composite	Annual
Mercury	mg/kg	Composite	Annual
Nickel	mg/kg	Composite	Annual
Selenium	mg/kg	Composite	Annual

Determination	Units	Type of Sample	Minimum Frequency
Silver	mg/kg	Composite	Annual
Tin	mg/kg	Composite	Annual
Zinc	mg/kg	Composite	Annual
PCBs	µg/kg	Composite	Annual
2,4-DDD	µg/kg	Composite	Annual
4,4-DDD	µg/kg	Composite	Annual
2,4-DDE	µg/kg	Composite	Annual
4,4-DDE	µg/kg	Composite	Annual
2,4-DDT	µg/kg	Composite	Annual
4,4-DDT	µg/kg	Composite	Annual
Aldrin	µg/kg	Composite	Annual
Alpha-Chlordane	µg/kg	Composite	Annual
Dieldrin	µg/kg	Composite	Annual
Endosulfan	µg/kg	Composite	Annual
Endrin	µg/kg	Composite	Annual
Gamma-BHC	µg/kg	Composite	Annual
Heptachlor	µg/kg	Composite	Annual
Heptachlor Epoxide	µg/kg	Composite	Annual
Hexachlorobenzene	µg/kg	Composite	Annual
Mirex	µg/kg	Composite	Annual
Trans-Nonachlor	µg/kg	Composite	Annual
Acenapthene	µg/kg	Composite	Annual
Acenaphthylene	µg/kg	Composite	Annual
Anthracene	µg/kg	Composite	Annual
Benzo(a)anthracene	µg/kg	Composite	Annual
Benzo(o)fluoranthene	µg/kg	Composite	Annual
Benzo(k)fluoranthene	µg/kg	Composite	Annual
Benzo(ghi)pyrelene	µg/kg	Composite	Annual
Benzo(a)pyrene	µg/kg	Composite	Annual
Benzo(e)pyrene	µg/kg	Composite	Annual
Biphenyl	µg/kg	Composite	Annual
Chrysene	µg/kg	Composite	Annual
Dibenz(ah)anthraces	µg/kg	Composite	Annual
Fluoranthene	µg/kg	Composite	Annual
Fluorene	µg/kg	Composite	Annual
Ideno(123cd)pyrene	µg/kg	Composite	Annual
Naphthalene	µg/kg	Composite	Annual
1-Methylnaphthalene	µg/kg	Composite	Annual
2-Methylnaphthalene	µg/kg	Composite	Annual
2,6-Dimethylnaphthalene	µg/kg	Composite	Annual
2,3,5-Trimethylnaphthale	µg/kg	Composite	Annual
Perylene	µg/kg	Composite	Annual
Phenanthrene	µg/kg	Composite	Annual
1-Methylphenanthene	µg/kg	Composite	Annual
Pyrene	µg/kg	Composite	Annual

d. **Fish Targeted for Analysis.** The species of fish targeted for tissue analysis from the trawl sites shall be primarily flatfish, including, but not limited to, Pacific sanddab (*Citharichthys sordidus*), longfin sanddab (*Citharichthys xanthostigma*), bigmouth

sole (*Hippoglossina stomata*), and hornyhead turbot (*Pleuronichthys verticalis*). If sufficient numbers of these primary flatfish species are not present in a zone, secondary candidate species such as the California scorpionfish (*Scorpaena guttata*) and halfbanded rockfish (*Sebastes semicinctus*) may be collected as necessary.

2. **Rig Fishing**

a. **Rig Fishing Frequency.** Muscle tissues shall be analyzed annually (e.g., during October) from fishes collected in each of the two rig fishing zones described below in order to monitor the uptake of pollutants in species and tissues that are consumed by humans.

b. **Rig Fishing Method and Location.** The fish shall be collected by hook and line or by setting baited lines from within zones surrounding rig fishing stations RF-3 and RF-4 listed in Table E-1. Rig Fishing Zone 3 is the nearfield (near ZID) area centered within a 1-km radius of station RF-3; Rig Fishing Zone 4 is considered the farfield area centered within a 1-km radius of station RF-4. There are no depth requirements for these two zones with regards to the collection of fishes for tissue analysis. The species targeted for muscle tissue analysis in the rig fishing stations shall be representative of those caught by recreational and/or commercial fishery activities in the region. The species targeted for muscle tissue analysis shall be primarily rockfish, which may include, but are not limited to, the vermilion rockfish (*Sebastes miniatus*) and the copper rockfish (*Sebastes caurinus*). If sufficient numbers of these primary species are not present or cannot be caught in a particular zone, secondary target species (e.g., other rockfish, scorpionfish) may be collected and analyzed as necessary. Fish samples shall be identified to species, with number of individuals per species, standard length and wet weight recorded. Physical abnormalities and disease symptoms shall be recorded and itemized (e.g., fin rot, lesions, and tumors).

c. **Rig Fishing Collection.** Three replicate composite samples of the target species shall be obtained from each zone, with each composite consisting of a minimum of three individual fish. Muscle tissue shall be chemically analyzed for the same set of constituents as trawl-caught fish specified in Table E-9 above.

E. Receiving Water Monitoring Reports

1. The Discharger shall submit Interim and Biennial Receiving Water Monitoring Reports to the San Diego Water Board. The Interim Receiving Water Monitoring Reports will cover only one year of receiving water monitoring (e.g., separate reports for calendar years 2016, 2018, and 2020), will only cover even numbered years, and shall be submitted every other year. The Biennial Receiving Water Monitoring Reports will provide a more thorough discussion, evaluation (e.g., detailed statistical analyses), and interpretation than the Interim Receiving Water Monitoring Reports, will cover two years of receiving water monitoring (e.g., biennial reports for calendar years 2016-2017, 2018-2019, and 2020-2021), and shall be submitted the opposite years as the Interim Receiving Water Monitoring Reports. These reports are described below under sections VIII.E.2 and VIII.E.3 and cover the following monitoring requirements:

a. Shoreline, offshore, and kelp monitoring (sections IV.A and IV.B.1 of this MRP);

b. Sediment chemistry (section IV.C.1 of this MRP);

c. Sediment toxicity (section IV.C.2 of this MRP);

d. Benthic community (section IV.C.3 of this MRP);

e. Fish and invertebrate trawls (section IV.D.1 of this MRP);

f. Rig fishing (section IV.D.2 of this MRP); and

g. Plume tracking (section IV.B.2 of this MRP).

2. The Discharger shall submit Interim Receiving Water Monitoring Reports (Interim Reports, executive summary) as specified in Table E-11, section IV.B of this MRP. The Interim Reports will cover the first "even" year in each biennial reporting cycle as described below in section IV.E.3 (e.g., separate reports for calendar years 2016, 2018, and 2020). The Interim Reports may be submitted as an integrated report covering both the receiving water monitoring required in this MRP, the MRP for the PLOO, and the MRP for the SBWRP (as required under separate waste discharge requirements (WDRs)). The Interim Reports shall include, as a minimum, the following information:

   a. A description of climatic and receiving water characteristics at the time of sampling (weather observations, floating debris, discoloration, wind speed and direction, swell or wave action, time of sampling, tide height, etc.);

   b. A description of sampling stations, including, if such information is available, differences unique to each station (e.g., station location, sediment grain size, distribution of bottom sediments, rocks, shell litter, calcareous worm tubes, etc.);

   c. A description of the sample collection and preservation procedures used in the survey;

   d. A description of the specific method used for laboratory analysis;

   e. A tabulation of the data; and

   f. A narrative summary of general observations, including any abnormal conditions.

3. The Discharger shall submit Biennial Receiving Water Monitoring and Assessment Reports (Biennial Reports, full assessment) as specified in Table E-11, section VIII.B of this MRP. These Biennial Reports will each cover a full 2-year monitoring cycle beginning with even-numbered years (e.g., biennial reports for calendar years 2016-2017, 2018-2019, 2020-2021). The Biennial Reports may be submitted as an integrated report covering both the receiving water monitoring required in this MRP, the MRP for the PLOO, and the MRP for the SBWRP (as required under separate WDRs). The Biennial Reports shall include, as a minimum, the following information:

   a. A description of climatic and receiving water characteristics at the time of sampling (weather observations, floating debris, discoloration, wind speed and direction, swell or wave action, time of sampling, tide height, etc.);

   b. A description of sampling stations, including, if such information is available, differences unique to each station (e.g., station location, sediment grain size, distribution of bottom sediments, rocks, shell litter, calcareous worm tubes, etc.);

   c. A description of the sample collection and preservation procedures used in the survey;

   d. A description of the specific method used for laboratory analysis; and

   e. An in-depth discussion, evaluation (e.g., detailed statistical analyses), interpretation and tabulation of the data including interpretations and conclusions as to whether applicable receiving water limitations in this Order have been attained at each station.

4. During the same year that the Biennial Reports are submitted, the Discharger shall provide a Biennial State of the Ocean Report (an oral report) to the San Diego Water Board

summarizing the conclusions of the Biennial Report over the 2-year monitoring period. If an oral report cannot be scheduled for a San Diego Water Board meeting, the San Diego Water Board may approve submission of a written Biennial State of the Ocean Report instead. The Biennial State of the Ocean Report shall include, as a minimum, a description of the monitoring effort completed during the past two years, the status and trends of receiving waters quality conditions, and plans for future monitoring efforts.

V. REGIONAL MONITORING REQUIREMENTS

Regional ocean water monitoring provides information about the sources, fates, and effects of anthropogenic contaminants in the coastal marine environment necessary to make assessments over large areas. The large scale assessments provided by regional monitoring describe and evaluate cumulative effects of all anthropogenic inputs and enable better decision making regarding protection of beneficial uses of ocean waters. Regional monitoring data assists in the interpretation of core monitoring studies by providing a more accurate and complete characterization of reference conditions and natural variability. Regional monitoring also leads to methods standardization and improved quality control through intercalibration exercise. The coalitions implementing regional monitoring enable sharing of technical resources, trained personnel and associated costs. Focusing these resources on regional issues and developing a broader understanding of pollutants effects in ocean waters enables the development of more rapid and effective response strategies. Based on all of these considerations the San Diego Water Board supports regional approaches to monitoring ocean waters.

The Discharger shall, as directed by the San Diego Water Board, participate with other regulated entities, other interested parties, and the San Diego Water Board in development and implementation of new and improved monitoring and assessment programs for ocean waters in the San Diego Region and discharges to those waters. These programs shall be developed and implemented so as to:

(1) Determine the status and trends of conditions in ocean waters in the San Diego Region with regard to beneficial uses, e.g.,

   i. Are fish and shellfish safe to eat?

   ii. Is water quality safe for swimming?

   iii. Are ecosystems healthy?

(2) Identify the primary stressors causing or contributing to conditions of concern;

(3) Identify the major sources of the stressors causing or contributing to conditions of concern; and

(4) Evaluate the effectiveness (i.e., environmental outcomes) of actions taken to address such stressors and sources.

Development and implementation of new and improved monitoring and assessment programs for ocean waters will be guided by the following:

1. Water Quality Control Plan Ocean Waters of California (Ocean Plan);
2. San Diego Water Board Resolution No. R9-2012-0069, “Resolution in Support of A Regional Monitoring Framework;”
3. San Diego Water Board staff report entitled “A Framework for Monitoring and Assessment in the San Diego Region;” and

4. Other guidance materials, as appropriate.

A. Kelp Bed Canopy Monitoring Requirements

Kelp consists of a number of species of brown algae. Along the central and southern California coast, giant kelp (Macrocystis pyrifera) is the largest species colonizing rocky, and in some cases sandy, subtidal habitats. Giant kelp is an important component of coastal and island communities in southern California, providing food and habitat for numerous animals. Monitoring of the kelp beds is necessary to answer the following questions:

(1) What is the maximum areal extent of the coastal kelp bed canopies each year?

(2) What is the variability of the coastal kelp bed canopy over time?

(3) Are coastal kelp beds disappearing? If yes, what are factors that could contribute to the disappearance?

(4) Are new coastal kelp beds forming?

The Discharger shall participate with other southern California ocean dischargers in an ongoing regional survey of coastal kelp beds in the Southern California Bight. The intent of these surveys is to provide an indication of the health of these kelp beds, recognizing that the extent of kelp bed canopies may change due to variety of influences.

Kelp beds shall be monitored by means of vertical aerial infrared photography to determine the maximum areal extent of the canopies of coastal kelp beds each year. Surveys shall be conducted as close as possible to when kelp bed canopies are at their greatest extent during the year. The entire San Diego Region coastline, from the international boundary to the San Diego Region/Santa Ana Region boundary shall be photographed on the same day.

The maximum areal extent of kelp bed canopies each year shall be compared to that observed in previous years. Any significant losses that persist for more than one year shall be investigated by divers to document benthic and understory conditions.

The data, analyses, assessment, and images produced by the surveys shall be made available in a user-friendly format on a website that is readily available to the public. In addition to the kelp bed canopies, the images shall show onshore reference points, locations of all ocean outfalls and diffusers, artificial reefs, areas of known hard-bottom substrate (i.e., rocky reefs), and depth contours at intervals of 30-feet mean lower low water (MLLW).

The surveys shall be conducted on a “continuous improvement” basis, i.e., each year improvements shall be made in monitoring, analysis, assessment, and/or documentation. For example, these could include:

1. More sophisticated analysis of patterns, correlations, and cycles that may be related to the extent of kelp bed canopies; or
2. Projects to improve understanding of influences on kelp beds or of how the extent of the canopies of various kelp beds has changed since the early 20th century.

B. Southern California Bight Monitoring Program Participation Requirements

The Discharger is required to participate in the, Southern California Bight Regional Monitoring Program coordinated by the Southern California Coastal Water Research Project (SCCWRP), or any other coordinator named by the Executive Officer, pursuant to CWC 13267, 13383, and 40 CFR 122.48. The intent of the Southern California Bight Regional Monitoring Program is to maximize the efforts of all monitoring partners using a more cost-effective monitoring design and to best utilize the pooled scientific resources of the Southern California Bight.

During these coordinated sampling efforts, the Discharger's receiving water sampling and analytical effort, as defined in section IV of this MRP, may be reallocated to provide a regional assessment of the impact of the discharge of municipal wastewater to the Southern California Bight. In that event, the Executive Officer shall notify the Discharger in writing that the requirement to perform the receiving water sampling and analytical effort defined in section IV of this MRP is suspended for the duration of the reallocation. Anticipated modifications to the monitoring program will be coordinated so as to provide a more comprehensive picture of the ecological and statistical significance of monitoring results and to determine cumulative impacts of various pollution sources. The level of resources in terms of sampling and analytical effort redirected from the receiving water monitoring program required under section IV this MRP shall approximately equal the level of resources provided to implement the regional monitoring and assessment program, unless the Executive Officer, the Discharger and City of San Diego agree otherwise. The specific scope and duration of the receiving water monitoring program reallocation and redirection shall be determined in writing by the Executive Officer in consultation with the Discharger and City of San Diego.

VI. SPECIAL STUDIES REQUIREMENTS

Compliance with Bacteriological Standards

By letter dated January 10, 2013, the City of San Diego provided a tabulation and interpretation of the SBOO receiving water monitoring data for the past 17 years. From 1999 to 2010, the Discharger (USIBWC) discharged advanced primary treated wastewater from the Facility into the Pacific Ocean through the SBOO. During this same time period, sample results at the three offshore receiving water stations closest to the SBOO ranged from 72 to 94 percent in compliance with bacterial water quality objectives and samples at all the offshore receiving water stations for SBOO ranged from 90 to 95 percent in compliance with bacterial water quality objectives. After USIBWC commenced discharging secondary treated effluent from the Facility to meet secondary treatment requirements in January, 2011, sample results at the three offshore stations closest to the SBOO were 99 percent in compliance and sample results at all the offshore stations for SBOO were also 99 percent in compliance.

A new analysis of the receiving water bacterial data is necessary to demonstrate if the SBOO discharge is attaining full compliance with bacteriological receiving water limitations described in section V.A.1 of this Order at all times. The data set used for this analysis must be sufficient to provide statistically defensible conclusions and shall include all receiving water bacterial data collected after July 31, 2012, when the Facility discharge attained substantial compliance with secondary treatment standards, through December 31, 2015. Primary questions to be addressed include the following:

(1) Does the Facility effluent cause or contribute to an exceedance of bacteriological receiving water limitations described in section V.A.1 of this Order in ocean waters outside the zone of initial dilution?

(2) What is the extent and magnitude of any identified exceedance of bacteriological receiving water limitations described in section V.A.1 of this Order?

(3) Do any identified exceedances impact any marine water contact recreation zones?

(4) If noncompliance with bacteriological receiving water limitations is identified, and if the noncompliance has not been corrected, what is the anticipated time it is expected to continue; and what are the steps taken or planned to reduce, eliminate, and prevent reoccurrence of the noncompliance?

Bacteriological Standards Compliance Assessment Report. The Discharger shall prepare and submit a technical report, no later than July 1, 2016, based on a study design consistent with the criteria described above. The technical report shall include an evaluation, interpretation and tabulation of the bacterial data used in the analysis. The report shall include interpretations and conclusions as to whether compliance with bacteriological receiving water limitations described in section V.A.1 of this Order has been attained at each sample station. If noncompliance with bacteriological receiving water limitations is identified, and if the noncompliance has not been corrected, the report shall also indicate the anticipated time it is expected to continue; and describe the steps taken or planned to reduce, eliminate, and prevent reoccurrence of the noncompliance.

VII. OTHER MONITORING REQUIREMENTS

A. Facilities Spills

For all Facilities Spill Events, as defined in section VI.C.2.a.i, the Discharger shall include a detailed summary of spills in the monthly self-monitoring report for the month in which the spill occurred. All Facilities Spill Events shall be tabulated on a monthly basis and summarized in the monthly self-monitoring report. If no spills occurred during the calendar month, the Discharger shall report no Facilities Spill Events in the monthly self-monitoring report for that calendar month. The following information shall be included for each event:

1. A description of the event and its cause (if known);
2. The location(s) where the event occurred, including the location;
3. The duration of the event (i.e., flow start and stop time, or expected stop time if ongoing due to repairs and maintenance);
4. The volume of the event including a description of any methodology, standardized templates, tables, or pictures used to provide the volume estimate (or flow rate if ongoing);
5. The results of any sampling conducted;
6. The amount of precipitation that occurred in the 72 hours prior to the event start time or during the event (if applicable);
7. Corrective actions taken or planned (if applicable); and
8. A description of any modifications made or planned to the Spill and Transboundary Wastewater Flow Prevention and Response Plan (if applicable).

B. Transboundary Wastewater Flows

The term transboundary wastewater flow is used in this Order to refer to a variety of flows containing pollutants from Tijuana, Mexico that have historically flowed into the United States via the north-draining canyons and ravines identified in this Order as Goat Canyon, Smugglers Gulch, Silva Drain, Canyon del Sol, and Stewart's Drain that empty into the Tijuana River Valley and Estuary. These wastewater flows from Tijuana are attributed to a variety of sources and causes including, but not limited to, treated wastewater effluent discharges, potable water leaks, sewer line leaks and spills, discharges from unsewered areas, and other failures and breakdowns of the wastewater collection infrastructure in

Mexico. The transboundary wastewater flows consist of treated and untreated municipal and industrial wastewater, potable water, and other miscellaneous flows depending on the source of the flow. These transboundary wastewater flows have adversely impacted the Tijuana River Valley and Estuary as well as adjacent coastal marine waters and beaches.

Monitoring of dry-weather transboundary wastewater flows that pass any one of the five Discharger's canyon collector systems is necessary to answer the following questions:

(1) What is the frequency and volume of dry weather transboundary wastewater flows?

(2) What are the sources of dry weather transboundary wastewater flows?

(3) What pollutants are present in dry weather transboundary wastewater flows and what is their concentration?

(4) Do pollutants in dry weather transboundary wastewater flows affect beneficial uses of the Tijuana River and Estuary?

(5) What is the mass loading of pollutants on the Tijuana River and Estuary from dry weather transboundary wastewater flows over time?

(6) Are the canyon collector systems being properly operated and maintained to ensure compliance with the conditions of the Order?

1. **Scope of Monitoring.** The Discharger shall conduct the monitoring and reporting program set forth below for the following event type:

   a. Transboundary Wastewater Flow Past the Canyon Collector System (Flow Event Type A) A dry weather transboundary treated or untreated wastewater or other flow through a conveyance structure owned and operated by the United States Government into Smuggler Gulch, Goat Canyon, Canyon del Sol, Stewart's Drain, or Silva Drain and not diverted into the canyon collector system for treatment at the Facility.

   b. Transboundary Wastewater Flow Event or Other Spill/Wastewater Flow Event in Mexico (Flow Event Type B). A dry weather spill or dry weather transboundary wastewater or other flow (not categorized in other Event Types) that creates, or threatens to create, pollution or nuisance conditions in waters of the United States and/or State including the Tijuana River (main channel), Yogurt Canyon drainage, other unnamed drainages and nearby coastal marine waters. These spills or transboundary flows include, but are not limited to the following:

      i. A dry weather transboundary treated or untreated wastewater flow in waters of the Tijuana River (main channel) as described in Commitment No. 16 of IBWC Minute No. 283 (*Conceptual Plan for the International Solution to the Border Sanitation Problem in San Diego, California/Tijuana, Baja California, July 2, 1990*).

      ii. A dry weather transboundary treated or untreated wastewater flow through a conveyance structure owned and operated by the United States Government into Yogurt Canyon.

      iii. Spills or wastewater flows occurring in Mexico that the Discharger has knowledge of.

2. **Inspections.** The Discharger shall conduct daily inspections of the international border areas at Smugglers Gulch, Goat Canyon, Canyon del Sol, Stewart's Drain, and Silva

Drain for the transboundary wastewater flows described in section VI.B.1.b above (see Table E-1 for Transboundary Station Locations). The inspections shall be documented, recorded, and contain the following information:

a. The monitoring location name and/or GPS coordinates, date, and time of inspection;

b. The weather conditions at the time of inspection;

c. The operational condition of the canyon collector system; and

d. If a flow is observed passing the Discharger's canyon collector system, the approximate date/time and amount of the last precipitation event, the estimated total volume diverted into the Discharger's canyon collector system, the estimated total volume that passes the Discharger's canyon collector system, and a description of the flow estimate methodology, including any standardized templates, tables, or pictures used to provide the estimates.

e. If no flow is observed that observation shall be recorded.

In the event that the Discharger is unable to inspect a location due to safety, legal, or other reasons, the inspection can be omitted. The Discharger shall record the circumstances for omitting the inspection.

3. **Monitoring.** If there is a transboundary flow that passes the Discharger's canyon collector system observed at the time of inspection, the Discharger shall monitor the flow for the parameters set forth below:

Table E-10. Spills and Transboundary Wastewater Flow Monitoring

Parameter	Units	Sample Type	Minimum Sampling Frequency	Required Analytical Test Method
Monitoring Location Name and/or GPS coordinates	--	--	--	--
Flow	MGD	Estimate[1]	1/day	--
BOD_5	mg/L	Grab	[2]	[3]
TSS	mg/L	Grab	[2]	[3]
TDS	mg/L	Grab	[2]	[3]
Turbidity	NTU	Grab	[2]	[3]
pH	pH Units	Grab	[2]	[3]
Total Nitrogen	mg/L	Grab	[2]	[3]
Total Phosphorus	mg/L	Grab	[2]	[3]
Enterococcus	number/100mL	Grab	[2]	[3]
Fecal Coliform	number/100mL	Grab	[2]	[3]
Total Coliform	number/100mL	Grab	[2]	[3]
Dissolved Oxygen	mg/L	Grab	[2]	[3]
Pesticides[4]	ug/L	Grab	[2]	[3]
Surfactants (MBAS)	ug/L	Grab	[2]	[3]
Priority Pollutants[5]	ug/L	Grab	[2]	[3]
Chronic Toxicity	TUc	Grab	[2]	[3]

1 A description of any methodology, standardized templates, tables or pictures used to provide the flow estimate shall be included in the report.

2 For transboundary wastewater flows that occur during dry weather (as defined in Attachment A of this Order), monitoring for these parameters is required once per Dry Weather flow event.

3. As required under 40 CFR part 136.

4 CWA section 301(h) pesticides listed at 40 CFR section 125.58(p).

5 California Toxics Rule; Priority pollutants as specified in 40 CFR section 131.38.

The reported results shall also include daily mass loading for BOD, TSS, TDS, total nitrogen, total phosphorus, pesticides, surfactants, and priority pollutants.

4. **Monthly Report.** All transboundary wastewater flow events shall be tabulated on a monthly basis and summarized in the monthly self-monitoring report. For Flow Event Type A, as defined in section VI.C.2.a.i of this Order, the monthly report shall include all the information set forth below. For Flow Event Type B, as defined in section VI.C.2.a.i of this Order, the monthly report shall include at a minimum the information set forth in items a-d, g, h, l, and m below to the extent such information is available. If no transboundary wastewater flows occurred within the calendar month, the Discharger shall report "no transboundary wastewater flows" for that calendar month in the monthly self-monitoring report. Each monthly report shall also include the rain gauge data from the Goat Canyon ALERT station and any other applicable rain gauge station, regardless of whether there was a transboundary flow event or not.

   a. A description of the event and its cause (if known);

   b. The location(s) where the event occurred, including the Transboundary Station location name (if applicable);

   c. The duration of the event (i.e., flow start and stop time, or expected stop time if ongoing due to repairs and maintenance);

   d. The volume of the event including a description of any methodology, standardized templates, tables, or pictures used to provide the volume estimate (or flow rate if ongoing);

   e. The results of any sampling conducted pursuant to section VI.A.3 of Attachment E, Table E-10 above;

   f. The reported results, if any, shall also include daily mass loading for BOD, TSS, TDS, total nitrogen, total phosphorus, pesticides, surfactants, and priority pollutants;

   g. The amount of precipitation that occurred in the 72 hours prior to the event start time or during the event at the Goat Canyon ALERT station and any other applicable rain gauge station (if applicable);

   h. The location and approximate volume of any related sewage spills that occurred in Tijuana, Mexico that may be contained in the reported transboundary wastewater flow (if known);

   i. If applicable, the reason why the canyon collector(s) did not capture the flow, or the date and time the canyon collector(s) were closed (if the transboundary wastewater flow ran past one or more of the canyon collectors);

   j. The most recent inspection, operation, and maintenance records for the applicable canyon collector(s) (if the transboundary wastewater flow ran past one or more of the canyon collectors);

   k. Corrective actions taken or planned (if applicable) (if the transboundary wastewater flow ran past one or more of the canyon collectors); and

   l. A description of any modifications made or planned to the Spill and Transboundary Wastewater Flow Prevention and Response Plan (if applicable); and

m. Any coordination with CILA to determine the reasons why the event occurred and any corrective actions planned or taken.

VIII. REPORTING REQUIREMENTS

A. General Monitoring and Reporting Requirements

1. The Discharger shall comply with all Standard Provisions (Attachment D of this Order) related to monitoring, reporting, and recordkeeping.
2. The Discharger shall report all instances of noncompliance not reported under Attachment D, Sections V.E, V.G, and V.H, of this Order at the time monitoring reports are submitted.

B. Self-Monitoring Report (SMR) Submittal

1. The Discharger shall electronically submit SMRs using the State Water Board's California Integrated Water Quality System (CIWQS) Program website (http://www.waterboards.ca.gov/ciwqs/index.html). SMRs must be signed and certified as required by the Standard Provisions (Attachment D). The CIWQS website will provide additional information for SMR submittal in the event of a planned or unplanned service interruption for electronic submittal. The Discharger shall maintain sufficient staffing and resources to ensure it submits SMRs that are complete and timely. This includes provision for training and supervision of individuals on how to prepare and submit SMRs.
2. The Discharger shall report in the SMR the results for all monitoring specified in this MRP under sections III through X. The Discharger shall submit SMRs including the results of all required monitoring using USEPA-approved test methods or other test methods specified in this Order. If the Discharger monitors any pollutant more frequently than required by this Order, the results of this monitoring shall be included in the calculations and reporting of the data submitted in the SMR. When CIWQS does not provide for entry into a tabular format within the system, the Discharger shall electronically submit the data in a tabular format as an attachment.
3. Unless otherwise noted in the MRP, monitoring periods and reporting for all required monitoring shall be completed according to the following schedule:

Table E-11. Monitoring Periods and Reporting Schedule

Sampling Frequency/ Report Type	Monitoring Period Begins	Monitoring Period	SMR Due Date
Continuous	First day of the calendar month following the permit effective date or on permit effective date if that date is first day of the month.	All	First day of second calendar month following month of sampling.
1/Day	First day of the calendar month following the permit effective date or on permit effective date if that date is first day of the month.	(Midnight through 11:59 PM) or any 24-hour period that reasonably represents a calendar day for purposes of sampling.	First day of second calendar month following month of sampling.
1/Week	First Sunday of the calendar month following the permit effective date or on permit effective date if that date is on the first Sunday of the calendar month.	Sunday through Saturday	First day of second calendar month following month of sampling.

Sampling Frequency/ Report Type	Monitoring Period Begins	Monitoring Period	SMR Due Date
1/Monthly[1,2]	First day of calendar month following permit effective date or on permit effective date if that date is first day of the month.	First day of calendar month through last day of calendar month	First day of second calendar month following month of sampling.
1/Quarter	Closest of January 1, April 1, July 1, or October 1 following (or on) permit effective date.	January 1 through March 31 April 1 through June 30 July 1 through September 30 October 1 through December 31	May 1 August 1 November 1 February 1
Interim Receiving Water Monitoring Report (executive summary)[3]	January 1 following (or on) the Order effective date.	One calendar year	July 1 of the year following the even years (e.g., separate reports for calendar years 2016 (due 7/1/2017), 2018 (due 7/1/2019), and 2020 (due 7/1/2021))
Biennial Receiving Water Monitoring and Assessment Report (full assessment) [4]	January 1 following (or on) the Order effective date.	Two calendar years	July 1 of the year following the odd years (e.g., biennial reports for calendar years 2016-2017 (due 7/1/2018), 2018-2019 (due 7/1/2020), and 2020-2021(due 7/1/2022))
Oral/Written Biennial State of the Ocean Report[5]	January 1 following (or on) the Order effective date.	Two calendar years	By December 31 of the year following the odd years (e.g., biennial reports for calendar years 2016-2017 (due 12/2018), 2018-2019 (due 12/2020), and 2020-2021(due 12/2022))

[1] Include the Monthly Report as required by sections VI.A and VI.B.4 of this Attachment E of Order No. R9-2014-0009.

[2] Include monitoring results for offshore stations (section IV.B of this MRP) in the monthly SMRs

[3] As specified in sections IV.E.1 and IV.E.2 of this MRP.

[4] As specified in sections IV.B.2.c, IV.E.1, and IV.E.3 of this MRP.

[5] As specified in section IV.E.4 of this MRP.

4. **Reporting Protocols.** The Discharger shall report with each sample result the applicable reported Minimum Level (reported ML, also known as the Reporting Level, or RL) and the current Method Detection Limit (MDL), as determined by the procedure in 40 CFR Part 136. For each numeric effluent limitation or performance goal for a parameter identified in Table 1 of the Ocean Plan, the Discharger shall not use a ML greater than that specified in Appendix II of the Ocean Plan.

   The Discharger shall report the results of analytical determinations for the presence of chemical constituents in a sample using the following reporting protocols:

   a. Sample results greater than or equal to the reported ML shall be reported as measured by the laboratory (i.e., the measured chemical concentration in the sample).Sample results less than the reported ML, but greater than or equal to the

laboratory's MDL, shall be reported as "Detected, but Not Quantified," or DNQ. The estimated chemical concentration of the sample shall also be reported.

b. For the purposes of data collection, the laboratory shall write the estimated chemical concentration next to DNQ. The laboratory may, if such information is available, include numerical estimates of the data quality for the reported result. Numerical estimates of data quality may be percent accuracy (± a percentage of the reported value), numerical ranges (low to high), or any other means considered appropriate by the laboratory.

c. Sample results less than the laboratory's MDL shall be reported as "Not Detected," or ND.

d. Dischargers are to instruct laboratories to establish calibration standards so that the ML value (or its equivalent if there is differential treatment of samples relative to calibration standards) is the lowest calibration standard. At no time is the Discharger to use analytical data derived from extrapolation beyond the lowest point of the calibration curve.

5. **Compliance Determination.** Compliance with effluent limitations for reportable pollutants shall be determined using sample reporting protocols defined above and Attachment A of this Order. For purposes of reporting and administrative enforcement by the San Diego Water Board and State Water Board, the Discharger shall be deemed out of compliance with effluent limitations if the concentration of the reportable pollutant in the monitoring sample is greater than the effluent limitation and greater than or equal to the reported Minimum Level (ML).

6. **Multiple Sample Data.** When determining compliance with a measure of central tendency (arithmetic mean, geometric mean, median, etc.) of multiple sample analyses and the data set contains one or more reported determinations of "Detected, but Not Quantified" (DNQ) or "Not Detected" (ND), the Discharger shall compute the median in place of the arithmetic mean in accordance with the following procedure:

   a. The data set shall be ranked from low to high, ranking the reported ND determinations lowest, DNQ determinations next, followed by quantified values (if any). The order of the individual ND or DNQ determinations is unimportant.

   b. The median value of the data set shall be determined. If the data set has an odd number of data points, then the median is the middle value. If the data set has an even number of data points, then the median is the average of the two values around the middle unless one or both of the points are ND or DNQ, in which case the median value shall be the lower of the two data points where DNQ is lower than a value and ND is lower than DNQ.

7. **Violations.** The SMRs shall clearly identify violations of the WDR's; discuss corrective actions taken or planned; and the proposed time schedule for corrective actions. Identified violations must include a description of the requirement that was violated and a description of the violation.

C. Discharge Monitoring Reports (DMR's)

1. At any time during the term of this permit, the State or San Diego Water Board may notify the Discharger to electronically submit DMR's. Until such notification is given specifically for the submittal of DMR's, the Discharger shall submit DMR's in accordance with the requirements described below.

2. DMR's must be signed and certified as required by the standard provisions (Attachment D). The Discharger shall submit the original DMR and one copy of the DMR to the address listed below:

STANDARD MAIL	FEDEX/UPS/ OTHER PRIVATE CARRIERS
State Water Resources Control Board Division of Water Quality c/o DMR Processing Center PO Box 100 Sacramento, CA 95812-1000	State Water Resources Control Board Division of Water Quality c/o DMR Processing Center 1001 I Street, 15th Floor Sacramento, CA 95814

3. All discharge monitoring results must be reported on the official USEPA pre-printed DMR forms (EPA Form 3320-1) or on self-generated forms that follow the exact same format of EPA Form 3320-1.
4. If either agency relocates its offices, the reports shall be submitted to the new office address provided by the San Diego Water Board.

D. Other Reports

The following reports are required under Special Provisions (section VI.C), Attachment E section IX, and the California Code of Regulations and shall be submitted to the San Diego Water Board, signed and certified as required by the Standard Provisions (Attachment D):

Table E-12. Other Reports

Report	Location of requirement	Due Date
Prevention/Response Plan	Section VI.C.2.a.ii	180 days after adoption of this Order
Prevention/Response Plan Amendment	Section VI.C.2.a.iii.a)	As Needed
Request to CILA to share Prevention/Response Plan and written confirmation from CILA	Section VI.C.2.b.i	1 year after adoption of this Order
Agenda and Meeting Summary for binational technical committee meetings on transboundary wastewater flow prevention and response	Section VI.C.2.b.ii	• January 1 through March 31 Report Due May 1 • April 1 through June 30 Report Due August 1 • July 1 through September 30 Report Due November 1 • October 1 through December 31 Report Due February 1
Presentation on transboundary wastewater flows	Section VI.C.2.b.v	See Table 6 of this Order
Preliminary Spill and Transboundary Wastewater Flow Report	Section VI.C.2.d.iii	As Needed
Certified Spill and Transboundary Wastewater Flow Report	Section VI.C.2.d.iv	As Needed
Toxicity Reduction Evaluation Workplan	Section VI.C.2.e.i	180 days after adoption of this Order
Results of any Toxicity Reduction Evaluation (TRE) Evaluation	Section VI.C.2.e.iii	Within 30 days of completion of the TRE
Bacteriological Standards Compliance Assessment Report.	Section VI of Attachment E	July 1, 2016
Influent Limitations	Section VI.C.5.a.i	Within one year of the adoption of this Order
Agenda and Meeting Summary for binational technical committee meetings on transboundary wastewater flow prevention and response	Section VI.C.5.b.i	• January 1 through March 31 Report Due May 1 • April 1 through June 30 Report Due August 1 • July 1 through September 30 Report Due November 1 • October 1 through December 31 Report Due February 1
Presentation and one-page summary information sheet on pretreatment information	Section VI.C.5.b.iv	See Table 8 of this Order
Annual Pretreatment Report	Section VI.C.5.c.v	March 31
Annual Sludge Report	Section VI.C.5.d.xi	March 30
Plume Tracking Monitoring Plan (PTMP)	Section IV.B.2 of this MRP	March 30, 2018
Report of Waste Discharge (for reissuance)	Title 23, California Code of Regulations	180 days before the Order expiration date

ATTACHMENT F – FACT SHEET

Contents

I. Permit Information F-3
II. Facility Description F-4
A. Description of Wastewater Collections F-5
B. Description of Wastewater and Solids Treatment and Controls F-6
C. Discharge Points and Receiving Waters F-6
D. Summary of Existing Requirements and Self-Monitoring Report (SMR) Data F-7
E. Compliance Summary F-12
F. Planned Changes F-13
III. Applicable Plans, Policies, and Regulations F-13
A. Legal Authorities F-13
B. California Environmental Quality Act F-13
C. State and Federal Laws, Regulations, Policies, and Plans F-13
D. Impaired Water Bodies on CWA 303(d) List F-15
E. Other Plans, Polices and Regulations F-16
IV. Rationale for Effluent Limitations and Discharge Specifications F-16
A. Discharge Prohibitions F-16
B. Technology-Based Effluent Limitations F-17
1. Scope and Authority F-17
2. Applicable Technology-Based Effluent Limitations F-17
C. Water Quality-Based Effluent Limitations (WQBELs) F-18
1. Scope and Authority F-18
2. Applicable Beneficial Uses and Water Quality Criteria and Objectives F-19
3. Determining the Need for WQBELs F-19
4. WQBEL Calculations F-23
5. Whole Effluent Toxicity (WET) F-31
D. Final Effluent Limitation Considerations F-31
1. Anti-Backsliding Requirements F-31
2. Antidegradation Policies F-33
3. Stringency of Requirements for Individual Pollutants F-33
E. Interim Effluent Limitations – Not Applicable F-33
F. Land Discharge Specifications – Not Applicable F-33
G. Recycling Specifications – Not Applicable F-34
V. Rationale for Receiving Water Limitations F-34
VI. Rationale for Provisions F-34
A. Standard Provisions F-34
B. Special Provisions F-34
1. Reopener Provisions F-34
2. Special Studies and Additional Monitoring Requirements F-34
3. Best Management Practices and Pollution Prevention – Not Applicable F-38
4. Construction, Operation, and Maintenance Specifications – Not Applicable F-38
5. Special Provisions for Municipal Facilities (Wastewater Facilities Only) F-38
6. Other Special Provisions F-40
7. Compliance Schedules – Not Applicable F-40
VII. Rationale for Monitoring and Reporting Requirements F-40
A. Core Monitoring Requirements F-40
B. Receiving Water Monitoring Requirements F-42

1. Shoreline Water Quality Monitoring Requirements F-42
2. Offshore Water Quality Monitoring Requirements F-43
3. Benthic Community Protection Monitoring Requirements F-43
4. Fish and Invertebrate Monitoring Requirements F-44
5. Receiving Water Monitoring Reports F-45
6. Groundwater – Not Applicable F-45
C. Regional Monitoring Requirements F-45
1. Kelp Bed Canopy Monitoring Requirements F-46
2. Southern California Bight Monitoring Program Participation Requirements F-47
D. Special Studies Requirements F-47
E. Other Monitoring Requirements F-48
VIII. Public Participation F-49
A. Notification of Interested Parties F-49
B. Written Comments F-49
C. Public Hearing F-49
D. Appeal of Waste Discharge Requirements F-50
E. Information and Copying F-50
F. Register of Interested Persons F-50
G. Additional Information F-50

Tables

Table F-1. Facility Information F-3
Table F-2. Historic Influent Limitations and Monitoring Data F-7
Table F-3. Historic Effluent Limitations and Monitoring Data (Major Constituents and Properties of Wastewater) F-8
Table F-4. Historic Effluent Limitations and Monitoring Data (Protection of Marine Aquatic Life) F-8
Table F-5. Historic Effluent Limitations and Monitoring Data (protection of Human Health) F-9
Table F-6. Basin Plan Beneficial Uses F-14
Table F-7. Ocean Plan Beneficial Uses F-14
Table F-8. Summary of Technology-Based Effluent Limitations Based on Secondary Treatment Standards F-18
Table F-9. Summary of Technology-Based Effluent Limitations Based on Table 2 of the Ocean Plan .. F-18
Table F-10. RPA Results Summary F-21
Table F-11. Pollutants Having Background Concentrations F-24
Table F-12. Water Quality Objectives from the Ocean Plan for Zinc F-25
Table F-13. Summary of Water Quality-based Effluent Limitations, Discharge Point No. 001 ..... F-25
Table F-14. Summary of Performance Goals F-27

ATTACHMENT F – FACT SHEET

As described in section I, the San Diego Water Board incorporates this Fact Sheet as findings of the San Diego Water Board supporting the issuance of this Order. This Fact Sheet includes the legal requirements and technical rationale that serve as the basis for the requirements of this Order.

This Order has been prepared under a standardized format to accommodate a broad range of discharge requirements for Dischargers in California. Only those sections or subsections of this Order that are specifically identified as "Not Applicable" have been determined not to apply to this Discharger. Sections or subsections of this Order not specifically identified as "Not Applicable" are fully applicable to this Discharger.

I. PERMIT INFORMATION

The following table summarizes administrative information related to the facility.

Table F-1. Facility Information

WDID	9 000000732
Discharger	International Boundary and Water Commission, United States Section
Name of Facility	South Bay International Wastewater Treatment Plant
Facility Address	2995 Clearwater Way
	San Diego, CA 92154
	San Diego County
Facility Contact, Title and Phone	Steven J. Smullen, Area Operations Manager, 619-662-7600
Authorized Person to Sign and Submit Reports	Dawi Dakhil, Civil Engineer, 619-662-7600
Mailing Address	4171 N. Mesa, C-100, El Paso, TX 79902
Billing Address	Same as mailing address
Type of Facility	Federally Owned Treatment Works (FOTW)
Major or Minor Facility	Major
Threat to Water Quality	1
Complexity	A
Pretreatment Program	Pretreatment Program administered by the Government of Mexico
Recycling Requirements	No
Facility Permitted Flow	25 million gallons per day (MGD)
Facility Design Flow	25 MGD
Watershed	Pacific Ocean
Receiving Water	Pacific Ocean
Receiving Water Type	Ocean

A. The United States section of the International Boundary and Water Commission (hereinafter Discharger or USIBWC) is the owner of the South Bay International Wastewater Treatment Plant (Facility or IWTP), five canyon collectors, two pump stations, the South Bay Land Outfall (SBLO) , South Bay Ocean Outfall (SBOO), and other associated infrastructure (collectively referred to as Facilities). The Discharger contracts with an entity to operate and maintain the Facilities. The SBLO is jointly owned by the Discharger and City of San Diego and operated and maintained by the Discharger. The SBOO is jointly owned and operated by the Discharger and City of San Diego. The City of San Diego discharges secondary effluent from

its South Bay Water Reclamation Plant (SBWRP) to the SBOO via the SBLO under separate waste discharger requirements (Order No. R9-2013-0006, NPDES Permit No. CA0109045).

For the purposes of this Order, references to the "discharger" or "permittee" in applicable federal and state laws, regulations, plans, or policy are held to be equivalent to references to the Discharger herein.

B. The Facility discharges wastewater to the Pacific Ocean, a water of the United States. The discharge was previously regulated by Order No. 96-50 and National Pollutant Discharge Elimination System (NPDES) Permit No. CA0108928 adopted on November 14, 1996 and expired on October 10, 2001. In accordance with Title 40, Code of Federal Regulations (CFR) section 122.6 and the State's regulations at title 23, division 3, chapter 9, article 3, section 2235.4 of the California Code of Regulations (CCR), the terms of the existing Order were administratively extended and continued in effect after the permit expiration date until the adoption of Order No. R9-2014-0009. Attachment B provides a map of the area around the Facilities. Attachment C provides a flow schematic of the Facilities.

C. The Discharger filed a Report of Waste Discharge (ROWD) and submitted an application of renewal for its Waste Discharge Requirements (WDR's) and NPDES permit in 2001. Because of ongoing litigation, finally concluded in 2013, the NPDES permit was not reissued at that time. The Discharger filed an updated ROWD and application for renewal of WDR's and NPDES permit in June 3, 2010.

II. FACILITY DESCRIPTION

After periods of tremendous population growth and a long history of inadequate sewerage facilities in Tijuana, Mexico and associated transboundary raw sewage flows, the governments of the United States and Mexico in 1990 agreed to build the Facility on the United States side of the border as part of a bilateral program to address environmental pollution in the international border region (IBWC Minute No. 283 between the United States and Mexican sections of the International Boundary and Water Commission). The Facility was built on a 75-acre site in San Ysidro, a community of the City of San Diego, near the international border in the U.S. immediately north of Tijuana's main wastewater pumping station. The Facility treats sewage flows exceeding the capacity of Tijuana's sewage treatment and conveyance facilities and also treats some transboundary flows in canyons and gullies that empty from Tijuana into the Tijuana River Estuary on the United States side of the international border. The Facility was originally planned as a secondary treatment facility; however, due to financial constraints, the plant was initially constructed as an advanced primary treatment facility in 1996.

In February 2001, the San Diego Water Board filed a complaint in U.S. District Court, Southern District of California (Court) against the Discharger, alleging violations of the federal Clean Water Act and the California Porter-Cologne Water Quality Control Act at the Facility. The complaint alleged the Discharger violated the terms of its NPDES Permit (San Diego Water Board Order No. 96-50/ NPDES Permit CA0108928) by failing to treat the Facility effluent to secondary treatment standards and by violating other effluent limitations.

On December 6, 2004, the Court issued a final judgment setting a compliance schedule for the Discharger to meet federal and state requirements for secondary treatment standards through construction of an activated sludge secondary treatment process at the Facility to improve effluent quality. Construction of the Facility upgrade was completed in late 2010; however, the Facility had an adjustment period of about one and a half years and did not start to consistently achieve substantial compliance with the NPDES Permit secondary treatment effluent limitations until mid-2012. On June 20, 2013, after about a year of substantial compliance with the secondary

treatment effluent limitations, the San Diego Water Board informed the Court of its opinion that the Discharger had complied with the Court's 2004 judgment.

A. Description of Wastewater Collections

The Facility receives flow from the City of Tijuana's municipal collection system which includes domestic and industrial sources, and receives flow from five canyon collectors used to capture transboundary dry weather flows. Approximately 25 MGD of sewage from Tijuana's 72-inch diameter line, at a location upstream of Tijuana's Pumping Plant (Pump Station 1/1A), is conveyed to Junction Box 1 in the U.S. by gravity flow. Then the sewage flows from Junction Box 1 to Junction Box 2 in the U.S. via gravity.

All dry weather flow in the Tijuana River that would otherwise flow into the United States is currently diverted from the river bed at the international border using the River Diversion Structure located on the Mexican side of the border. During low flow/ dry weather conditions, the Tijuana River water is conveyed by the CILA Pump Station, through a line parallel to the 72-inch diameter sewage line, to Tijuana's Pumping Plant (Pump Station 1/1A). From Tijuana's Pumping Plant (Pump Station 1/1A), Tijuana River water is sent south and discharged directly to the Pacific Ocean at Punta Bandera, located approximately 5.6 miles south of the international border. No Tijuana River water is currently diverted to the Facility. During high flow/ wet weather conditions (greater than 1000 liters per second of flow in the Tijuana River), the River Diversion Structure screens cannot be cleaned; the flow in the Tijuana River is not diverted and continues across the international border into the United States.

Canyon collectors are concrete channels and basins designed to capture transboundary dry weather flows from Mexico in canyons and ravines draining north across the international border into the United States. There are five canyon collector systems: Goat Canyon Diversion Structure, Smugglers Gulch Diversion Structure, Silva Drain Canyon Collector, Canyon del Sol Collector, and Stewarts Drain Canyon Collector. Captured dry weather flows from these collectors are diverted to the Facility for treatment and disposal through the SBOO. Any quantity of flows in the canyons exceeding the maximum design capacity of the canyon collectors overflows the structure and continues flowing north, potentially polluting the Tijuana River, the Tijuana River Valley and Estuary, and Pacific Ocean waters at south San Diego beaches. The canyon collector at Goat Canyon Diversion Structure conveys diverted flow to Goat Canyon Pump Station via gravity. From Goat Canyon Pump Station, flow is pumped to Hollister Street Pump Station. The canyon collector at Smugglers Gulch Diversion Structure conveys diverted flow to Hollister Street Pump Station via gravity. From the Hollister Street Pump Station, the diverted flow is pumped to Junction Box 2. The remaining three canyon collectors (Silva Drain Canyon Collector, Canyon del Sol Collector, and Stewarts Drain Canyon Collector) convey flow to Junction Box 2 by gravity flow.

Combined flows gathered at Junction Box 2 are conveyed via gravity to the Facility's headworks. Junction Box 1 contains valves to control the amount of Tijuana sewage flowing into the Facility. The Discharger has the capacity to increase influent flows in the event that an interruption of service were to occur in Tijuana's sewage treatment system.

The City of Tijuana operates several wastewater treatment plants in Mexico, including the San Antonio de los Buenos Treatment Plant. The San Antonio de los Buenos Treatment Plant operates in parallel to the Facility, possesses a design capacity of 25 MGD, and receives influent flows from the City of Tijuana conveyance system. Pumping Station 1 consists of a 42-inch force main and a conveyance canal possessing an operational capacity of 36 MGD.

A schematic illustrating the described wastewater collections is included in Attachment C to this Order

B. Description of Wastewater and Solids Treatment and Controls

Wastewater treatment unit operations and processes at the Facility consist of three mechanical bar screens, one grit removal unit, six primary sedimentation tanks with ferric chloride injection capabilities, polymer injections, seven aeration basins, and 10 secondary clarifiers. During the winter when the discharge (or outfall) plume is most likely to surface, the Discharger also chlorinates the effluent with sodium hypochlorite. Treated wastewater is discharged to the Pacific Ocean through the SBOO, via the SBLO. Attachment C provides a flow schematic of the Facility.

The advanced primary treatment facility has a peak hydraulic capacity of 100 MGD, a peak design flow rate of 75 MGD, and an average design flow rate of 25 MGD. The secondary treatment design capacity is 25 MGD with a peaking factor of approximately 2. If flow from the primary treatment units to the secondary treatment units exceeds 49.85 MGD, primary effluent flows exceeding 49.85 MGD bypass the polymer addition and activated sludge processes and discharge directly to the SBOO. Bypasses are prohibited unless they meet the requirements contained in Attachment D of this Order, section I.G The annual average daily discharge flow between the years 2008 through 2012 are summarized below:

Year	Annual Average Daily Flow
2008	23.92 MGD
2009	22.76 MGD
2010	22.95 MGD
2011	24.50 MGD
2012	23.98 MGD
2013	24.44 MGD

Solids from secondary sedimentation tanks are conveyed to three dissolved air flotation units for thickening. Thickened sludge from the dissolved air flotation units and solids collected from the primary sedimentation tanks are sent to an on-site solids handling facility for dewatering using belt-filter presses and lime stabilization. Processed solids are collected on-site and trucked to Mexico for disposal.

C. Discharge Points and Receiving Waters

The SBLO was completed in March 1994. The SBLO is 12,300 feet long. The SBLO starts at the Facility and ends at the mouth of Goat Canyon, where it connects to the SBOO. The diameter of the SBLO is 144 inches. The SBLO and SBOO were constructed for use by the Discharger and the City of San Diego's SBWRP. The SBOO extends westward approximately 23,600 feet from SBLO and the mouth of the Tijuana River. The outfall terminates in a wye diffuser with two 1,980-foot diffusers. The terminus of the ocean outfall and diffusors was placed within the territorial marine waters of the State as defined by California law.

Each diffuser leg contains 82 diffuser riser assemblies, and one at the wye structure for a total of 165 diffuser riser assemblies. The SBOO was constructed with a total average design capacity of 174 MGD and a peak hydraulic capacity of 233 MGD. The Facility is permitted to discharge up to 25 MGD of secondary treated wastewater to the outfall and the SBWRP is permitted to discharge up to 15 MGD. The effluent from the SBWRP is combined with the effluent from the Facility within the SBOO prior to discharge to the Pacific Ocean. To achieve proper effluent velocity and dilution levels, 18 diffuser risers (72 open ports) are in use on the

South leg of the diffuser. The North leg of the diffuser is closed with no open ports. The terminus of the diffuser is located at Latitude 32° 32' 15" North, Longitude 117° 11' 00" West.

The San Diego Water Board, with assistance from the State Water Board, determined the minimum initial dilution factor to be 94.6 for the discharge of up to 40 MGD of combined effluent through the SBOO using the U.S. Environmental Protection Agency (USEPA)-approved computer modeling package Visual Plumes with the UM3 model. The computer modeling was performed based on characteristics of the SBOO, the effluent, and the receiving water, subject to the input limitations of Visual Plumes. Monthly profiles for the receiving water were developed using receiving water data provided by the Discharger for the time period between June 2002 and April 2005. Initial dilution factors were determined for each monthly profile; the most conservative and minimum initial dilution factor was determined using the May profile. Section IV.C.3 of this Fact Sheet includes additional discussion of initial dilution. Additional details of the initial dilution computer modeling performed are provided in Attachment H and in the San Diego Water Board records.

D. Summary of Existing Requirements and Self-Monitoring Report (SMR) Data

Influent limitations, effluent limitations, and discharge specifications contained in Order No. 96-50 for discharges from the Facility and representative monitoring data from July 2012 – October 2013 are as follows:

Table F-2. Historic Influent Limitations and Monitoring Data

Parameter	Units[1]	Influent Limitation			Monitoring Data[2] (July 2012 – October 2013)		
		Average Monthly	6-Month Median	Maximum At Anytime	Highest Average Monthly	Highest Average 6-Month Median	Highest Maximum At Anytime
Arsenic, Total Recoverable	mg/L	0.024	--	--	0.153	--	--
	lbs/day	5.0	--	--	37,093.9	--	--
Beryllium	mg/L	0.0025	--	--	<0.0018	--	--
	lbs/day	0.52	--	--	<544.9	--	--
Cadmium, Total Recoverable	mg/L	0.061	--	--	0.0121	--	--
	lbs/day	13	--	--	3,016.3	--	--
Chromium, Total Recoverable	mg/L	1.1	--	--	0.0227	--	--
	lbs/day	230	--	--	5,556.5	--	--
Copper, Total Recoverable	mg/L	--	0.15	--	--	0.955	--
	lbs/day	--	32	--	--	214.7	--
Cyanide	mg/L	--	0.075	--	--	<0.02	--
	lbs/day	--	16	--	--	<6.055	--
Lead, Total Recoverable	mg/L	0.16	--	--	0.027	--	--
	lbs/day	34	--	--	6.4	--	--
Mercury	mg/L	--	--	0.0054	--	--	0.0167
	lbs/day	--	--	1.1	--	--	4.027
Nickel, Total Recoverable	mg/L	--	0.44	--	--	0.236	--
	lbs/day	--	93	--	--	53.06	--
Silver, Total Recoverable	mg/L	--	0.052	--	--	0.012	--
	lbs/day	--	11	--	--	2.698	--

Parameter	Units[1]	Influent Limitation			Monitoring Data[2] (July 2012 – October 2013)		
		Average Monthly	6-Month Median	Maximum At Anytime	Highest Average Monthly	Highest Average 6-Month Median	Highest Maximum At Anytime
Zinc, Total Recoverable	mg/L	--	1.1	--	--	49.8	--
	lbs/day	--	220	--	--	2,296.43	--
HCH[1]	mg/L	--	0.00042	--	--	<0.000014	--
	lbs/day	--	0.088	--	--	<0.00151	--

1 See Attachment A for definitions of abbreviations and a glossary of common terms used in this Order.

2 ND = Not Detected and NR = Not Reported

Table F-3. Historic Effluent Limitations and Monitoring Data (Major Constituents and Properties of Wastewater)

Parameter	Units[1]	Effluent Limitation			Monitoring Data[2] (July 2012 – October 2013)		
		Average Monthly	Average Weekly	Maximum At Anytime	Highest Average Monthly Discharge	Highest Average Weekly Discharge	Highest Maximum At Anytime
Flow	MGD	--	--	25	--	--	[3]
Carbonaceous Biochemical Oxygen Demand (5-Day at 20°C) ($CBOD_5$)	mg/L	25	40	45	18.8	33.1	140
	lbs/day	5,200	8,300	9,400	3896.6	7093.6	31,724
$CBOD_5$ percent removal	%	85	--	--	NR	--	--
Total Suspended Solids (TSS)	mg/L	30	45	50	26.2	61.7	339
	lbs/day	6,300	9,400	10,000	5570	13,573.9	76,817
TSS percent removal	%	85	--	--	NR	--	--
Oil & Grease	mg/L	25	40	75	0.1	0.1	39.6
	lbs/day	5,200	8,300	16,000	493.5	1,454.4	8,973.3
Settleable Solids	mL/L	1.0	1.5	3.0	NR	NR	6.2
Turbidity	NTU	75	100	225	8	24.9	155
pH	S.U.	Within limits of 6.0 - 9.0 at all times.			--	--	6.2-7.6[3]
Acute Toxicity	TUa	1.5	2.0	2.5	3.1	NR	8

1 See Attachment A for definitions of abbreviations and a glossary of common terms used in this Order.

2 ND = Not Detected and NR = Not Reported

3 Represents range of monitoring results

Table F-4. Historic Effluent Limitations and Monitoring Data (Protection of Marine Aquatic Life)

Parameter	Units[1]	Effluent Limitation[2]			Monitoring Data[3] (July 2012 – October 2013)		
		6-Month Median	Maximum Daily	Instantaneous Maximum	Highest 6-month Median	Highest Maximum Daily	Highest Instantaneous Maximum
Arsenic, Total Recoverable	mg/L	0.51	2.9	7.8	NR	NR	0.216
	lbs/day	110	600	1,600	NR	NR	50.15
Cadmium, Total Recoverable	mg/L	0.10	0.40	1.0	NR	NR	0.0124
	lbs/day	21	83	210	NR	NR	2.7
Chromium (VI)	mg/L	0.20	0.81	2.0	NR	NR	0.158
	lbs/day	42	170	420	NR	NR	32.46

Parameter	Units[1]	Effluent Limitation[2]			Monitoring Data[3] (July 2012 – October 2013)		
		6-Month Median	Maximum Daily	Instantaneous Maximum	Highest 6-month Median	Highest Maximum Daily	Highest Instantaneous Maximum
Copper, Total Recoverable	mg/L	0.10	1.0	2.8	NR	NR	0.0517
	lbs/day	21	210	580	NR	NR	12.94
Lead, Total Recoverable	mg/L	0.20	0.81	2.0	NR	NR	0.12
	lbs/day	42	170	420	NR	NR	25.31
Mercury	mg/L	4.0	16	40	NR	NR	0.0133
	lbs/day	0.83	3.3	8.3	NR	NR	3.01
Nickel, Total Recoverable	mg/L	0.51	2.0	5.1	NR	NR	0.0295
	lbs/day	100	420	1,000	NR	NR	6.1
Selenium	mg/L	1.5	6.1	15	NR	NR	0.0546
	lbs/day	310	1,300	3,100	NR	NR	11.97
Silver, Total Recoverable	mg/L	0.055	0.27	0.69	NR	NR	<0.0007
	lbs/day	11	56	140	NR	NR	0.2119
Zinc, Total Recoverable	mg/L	1.2	7.3	19	NR	NR	1.4
	lbs/day	250	1,500	4,000	NR	NR	344.79
Cyanide	mg/L	0.10	0.40	1.0	NR	NR	<0.00002
	lbs/day	21	83	210	NR	NR	6.054
Total Chlorine Residual	mg/L	0.20	0.81	6.1	NR	NR	0.0002
	lbs/day	42	170	1,300	NR	NR	45.3
Ammonia (as N)	mg/L	61	240	610	NR	NR	0.0394
	lbs/day	13,000	50,000	130,000	NR	NR	8927.95
Chronic Toxicity	TUc	--	--	100	--	400	200
Phenolic Compounds[1] (Non-Chlorinated)	mg/L	3.0	12	30	NR	NR	<0.0249
	lbs/day	630	2,500	6,300	NR	NR	5.15
Chlorinated Phenolics[1]	mg/L	0.10	0.40	1.0	NR	NR	<0.011
	lbs/day	21	83	210	NR	NR	2.185
Endosulfan[1]	µg/L	0.91	1.8	2.7	NR	NR	<0.034
	lbs/day	0.19	0.38	0.56	NR	NR	NR
Endrin	µg/L	0.20	0.40	0.61	NR	NR	<0.002
	lbs/day	0.042	0.083	0.13	NR	NR	0.00052
HCH[1]	µg/L	0.40	0.81	1.2	NR	NR	<0.014
	lbs/day	0.083	0.17	0.25	NR	NR	0.0031
Radioactivity	Not to exceed limits specified in title 17, division 1, chapter 5, subchapter 4, group 3, article 3, section 30253 of the California Code of Regulations.						

1 See Attachment A for definitions of abbreviations and a glossary of common terms used in this Order.

2 Effluent limits determined using the 2012 California Ocean Plan, an initial dilution factor of 94.6, and a flow rate of 25 MGD.

3 ND = Not Detected and NR = Not Reported

Table F-5. Historic Effluent Limitations and Monitoring Data (protection of Human Health)

Parameter	Units[1]	Effluent Limitation[2]	Monitoring Data[3] (July 2012 – October 2013)
		30-day Average	Highest 30-day Average
Acrolein	mg/L	22	< 0.020
	lbs/day	4,600	NR
Antimony	mg/L	120	<0.023
	lbs/day	25,000	NR
Bis(2-chloroethoxy)methane	mg/L	0.44	<0.001
	lbs/day	92	NR

Parameter	Units[1]	Effluent Limitation[2]	Monitoring Data[3] (July 2012 – October 2013)
		30-day Average	Highest 30-day Average
Bis(2-chloroisopropyl)ether	mg/L	120	<0.001
	lbs/day	25,000	NR
Chlorobenzene	mg/L	58	<0.001
	lbs/day	12,000	NR
Chromium (III)	g/L	19,000	0.026
	lbs/day	4,000,000	NR
Di-n-butyl Phthalate	mg/L	350	0.0069
	lbs/day	73,000	NR
Dichlorobenzenes[1]	g/L	0.52	2.0×10^{-12}
	lbs/day	110,000	NR
Diethyl Phthalate	g/L	3.3	19×10^{-6}
	lbs/day	690,000	NR
Dimethyl Phthalate	g/L	83	<0.001
	lbs/day	17,000,000	NR
4,6-dinitro-2-methylphenol	mg/L	22	<0.001
	lbs/day	4,600	NR
2,4-dinitrophenol	µg/L	0.40	22.75
	lbs/day	83	NR
Ethylbenzene	mg/L	400	0.0087
	lbs/day	83,000	NR
Fluoranthene	mg/L	1.5	<0.001
	lbs/day	310	NR
Hexachloro-cyclopentadiene	mg/L	5.9	<0.001
	lbs/day	1,200	NR
Nitrobenzene	mg/L	0.49	<0.001
	lbs/day	100	NR
Thallium	mg/L	1.4	<0.011
	lbs/day	290	NR
Toluene	g/L	8.6	0.11
	lbs/day	1,800,000	NR
Tributyltin	µg/L	0.14	0.003
	lbs/day	0.029	NR
1,1,1-trichloroethane	g/L	54	$<1 \times 10^{-6}$
	lbs/day	11,000,000	NR
Acrylonitrile	µg/L	10	<20
	lbs/day	2.1	NR
Aldrin	ng/L	2.2	<75
	lbs/day	0.00046	NR
Benzene	mg/L	0.60	<0.001
	lbs/day	120	NR
Benzidine	ng/L	7.0	<1
	lbs/day	0.0015	NR
Beryllium	µg/L	3.3	<0.009
	lbs/day	0.69	NR
Bis(2-chloroethyl)ether	µg/L	4.5	<1
	lbs/day	0.94	NR
Bis(2-ethylhexyl) phthalate	µg/L	350	61
	lbs/day	73	NR
Carbon Tetrachloride	µg/L	0.91	<1
	lbs/day	19	NR
Chlordane[1]	ng/L	2.3	<50
	lbs/day	0.00048	NR
Chlorodibromomethane (dibromochloromethane)	NA	NA	
	NA	NA	

Parameter	Units[1]	Effluent Limitation[2]	Monitoring Data[3] (July 2012 – October 2013)
		30-day Average	Highest 30-day Average
Chloroform	mg/L	13	0.015
	lbs/day	2,700	NR
DDT[1]	ng/L	17	<10
	lbs/day	0.0035	NR
1,4-dichlorobenzene	mg/L	1.8	<0.001
	lbs/day	380	NR
3,3-dichlorobenzidine	µg/L	0.82	1
	lbs/day	0.17	NR
1,2-dichlorothane	mg/L	13	<0.001
	lbs/day	2,700	NR
1,1-dichloroethylene	g/L	72	$<1x10^{-6}$
	lbs/day	150,000	NR
Dichlorobromomethane	NA	NA	
	NA	NA	
Dichloromethane (Methylene Chloride)	mg/L	45	<0.001
	lbs/day	9,400	NR
1,3-dichloropropene (1,3-Dichloropropylene)	mg/L	0.90	<0.001
	lbs/day	190	NR
Dieldrin	ng/L	4.0	<20
	lbs/day	0.00083	NR
2,4-dinitrotoluene	µg/L	260	< 1
	lbs/day	54	NR
1,2-diphenylhydrazine	µg/L	16	< 5
	lbs/day	3.3	NR
Halomethanes[1]	mg/L	13	0.0363
	lbs/day	2,700	NR
Heptachlor	ng/L	73	<0.01
	lbs/day	0.015	NR
Heptachlor Epoxide	NA	NA	
	NA	NA	
Hexachlorobenzene	ng/L	21	<1
	lbs/day	0.0044	NR
Hexachlorobutadiene	mg/L	1.4	<0.001
	lbs/day	290	NR
Hexachloroethane	µg/L	250	<1
	lbs/day	52	NR
Isophorone	g/L	15	<0.001
	lbs/day	3,100,000	NR
N-nitrosodimethylamine	mg/L	0.74	0.003
	lbs/day	150	NR
N-nitrosodi-N-propylamine	NA	NA	
	NA	NA	
N-nitrosodiphenylamine	µg/L	250	<1
	lbs/day	52	NR
PAHs[1]	µg/L	0.89	< 1
	lbs/day	0.19	NR
PCBs[1]	ng/L	1.9	<500
	lbs/day	0.00040	NR
TCDD Equivalents[1]	pg/L	0.39	<5
	lbs/day	$8.1x10^{-8}$	NR
1,1,2,2-tetrachlorothane	mg/L	120	<0.001
	lbs/day	25,000	NR
Tetrachloroethylene (Tetrachloroethene)	mg/L	1.0	0.005
	lbs/day	210	NR

Parameter	Units[1]	Effluent Limitation[2]	Monitoring Data[3] (July 2012 – October 2013)
		30-day Average	Highest 30-day Average
Toxaphene	ng/L	21	<1,000
	lbs/day	0.0044	NR
Trichloroethylene (Trichloroethene)	mg/L	2.7	0.012
	lbs/day	560	NR
1,1,2-trichloroethane	g/L	4.3	$<1x10^{-6}$
	lbs/day	900,000	NR
2,4,6-Trichlorophenol	µg/L	29	0.4
	lbs/day	6.0	NR
Vinyl Chloride	mg/L	3.6	<0.005
	lbs/day	750	NR

1 See Attachment A for definitions of abbreviations and a glossary of common terms used in this Order.

2 Effluent limits determined using the 2012 California Ocean Plan, an initial dilution factor of 94.6, and a flow rate of 25 MGD.

3 ND = Not Detected and NR = Not Reported

E. Compliance Summary

The Facility first started to discharge advanced primary-treated effluent to the SBOO in January 1999, under Order No. 96-50. As explained in section II of this Fact Sheet, the Facility was initially planned as a secondary treatment facility; however, due to financial constraints, the plant was instead constructed as an advanced primary treatment facility in 1996. The primary-treated effluent could not comply with the secondary treatment effluent limitations contained in Order No. 96-50 and there were numerous exceedances of other effluent limitations as well. The effluent exceedances included acute toxicity, ammonia, $CBOD_5$, chronic toxicity, mercury, TCDD equivalents, TSS, 2,4,6-trichlorophenol, chlordane, copper, DDT, nickel, PAH, PCB, tributyltin, zinc, turbidity, and flow. From 1996 to 2001, the Facility was regulated under Cease and Desist Order No. 96-52, which contained a time schedule for achieving compliance with the secondary treatment effluent limitations contained in Order No. 96-50. The Cease and Desist Order also contained interim effluent limitations which would remain in effect until compliance with secondary treatment effluent limitations was achieved. From 2001 to approximately June 20, 2013, the Facility was subject to a federal court's judgment setting a compliance schedule for meeting federal and state secondary treatment requirements through construction of an activated sludge secondary treatment process at the Facility to improve effluent quality.

The Facility upgrade to secondary treatment became operational in November 2010; however, due to various operational problems the facility was unable to consistently achieve substantial compliance with secondary treatment effluent limitations until mid-2012. Since June 2013, the Discharger has reported the following influent and effluent limitation exceedances:

- Arsenic (two violations of the monthly average influent concentration limitation (mg/L) and two violations of the monthly average influent mass emission limitation (lb/day) on July 27, 2013 and October 20, 2013).
- Mercury (one violation of the monthly average influent concentration limitation (mg/L) and one violation of the monthly average influent mass emission limitation (lb/day) on August 6, 2013).

- $CBOD_5$ (two violations of the instantaneous maximum effluent concentration limitation (mg/L) and two violations of the instantaneous maximum effluent mass emission limitation (lb/day) on March 10 and 16, 2014).
- TSS (two violations of the instantaneous maximum effluent concentration limitation (mg/L) and two violations of the instantaneous maximum effluent mass emission limitation (lb/day) on March 10 and 16, 2014).
- Acute Toxicity (one violation of the instantaneous maximum effluent limitation and nine violations of the 30-day average effluent limitation on July 25 and 31, 2013; August 5, 8, 13, 15, and 19, 2013; and March 26 and 27, 2014).
- TCDD (four violations of the 30-day average effluent concentration limitation (mg/L) on July 1, 2013; August 1, 2013; September 1, 2013; and October 1, 2013).

Under the Tentative Order, since June 2013, the Discharger would have only had the following violations:

- Arsenic (two violations of the monthly average influent concentration limitation (mg/L) and two violations of the monthly average influent mass emission limitation (lb/day) on July 27, 2013 and October 20, 2013).
- Mercury (one violation of the monthly average influent concentration limitation (mg/L) and one violation of the monthly average influent mass emission limitation (lb/day) on August 6, 2013).
- Acute Toxicity (one violation of the instantaneous maximum limitation on March 26, 2014).
- TCDD (four violations of the 30-day average concentration limitation (mg/L) on July 1, 2013; August 1, 2013; September 1, 2013; and October 1, 2013).

F. Planned Changes

The Discharger completed an upgrade to secondary treatment in November, 2010 and has not indicated that any plans exist to make additional upgrades or alterations to its system.

III. APPLICABLE PLANS, POLICIES, AND REGULATIONS

The requirements contained in this Order are based on the requirements and authorities described in this section.

A. Legal Authorities

This Order serves as WDR's pursuant to article 4, chapter 4, division 7 of the Water Code (commencing with section 13260). This Order is also issued pursuant to section 402 of the federal Clean Water Act (CWA) and implementing regulations adopted by the USEPA and chapter 5.5, division 7 of the Water Code (commencing with section 13370). It shall serve as an NPDES permit for point source discharges from this facility to surface waters.

B. California Environmental Quality Act

Under Water Code section 13389, this action to adopt an NPDES permit is exempt from the provisions of chapter 3 of the California Environmental Quality Act (CEQA), (commencing with section 21100) of division 13 of the Public Resources Code.

C. State and Federal Laws, Regulations, Policies, and Plans

1. **Water Quality Control Plan.** The Water Quality Control Plan for the San Diego Basin (Basin Plan) designates beneficial uses, establishes water quality objectives, and

contains implementation programs and policies to achieve those objectives for all waters addressed through the plan. The San Diego Water Board adopted, and the State Water Board approved the Basin Plan in 1975. A subsequent revision to the Basin Plan was adopted by the San Diego Water Board and approved by the State Water Board in 1994. Beneficial uses applicable to the Pacific Ocean specified in the Basin Plan are as follows:

Table F-6. Basin Plan Beneficial Uses

Discharge Point No.	Receiving Water Name	Beneficial Use(s)
001	Pacific Ocean	Industrial service supply; navigation; contact water recreation; non-contact water recreation; commercial and sport fishing; preservation of biological habitats of special significance; wildlife habitat; rare, threatened, or endangered species; marine habitat; aquaculture; migration of aquatic organisms; spawning, reproduction, and/or early development; and shellfish harvesting.

In order to protect the beneficial uses, the Basin Plan establishes water quality objectives and a program of implementation. Requirements of this Order implement the Basin Plan.

2. **California Ocean Plan.** The State Water Board adopted the Water Quality Control Plan for Ocean Waters of California, California Ocean Plan (Ocean Plan) in 1972 and amended it in 1978, 1983, 1988, 1990, 1997, 2000, 2005, 2009, and 2012. The State Water Board adopted the latest amendment on October 16, 2012, and it became effective on August 19, 2013. The Ocean Plan is applicable, in its entirety, to point source discharges to the ocean. The Ocean Plan identifies beneficial uses of ocean waters of the state to be protected as summarized below:

Table F-7. Ocean Plan Beneficial Uses

Discharge Point No.	Receiving Water	Beneficial Uses
001	Pacific Ocean	Industrial water supply; water contact and non-contact recreation, including aesthetic enjoyment; navigation; commercial and sport fishing; mariculture; preservation and enhancement of designated Areas of Special Biological Significance (ASBS); rare and endangered species; marine habitat; fish spawning and shellfish harvesting

In order to protect the beneficial uses, the Ocean Plan establishes water quality objectives and a program of implementation. Requirements of this Order implement the Ocean Plan.

3. **Alaska Rule.** On March 30, 2000, USEPA revised its regulation that specifies when new and revised state and tribal water quality standards (WQS) become effective for CWA purposes (40 CFR section 131.21, 65 Fed. Reg. 24641 (April 27, 2000)). Under the revised regulation (also known as the Alaska Rule), new and revised standards submitted to USEPA after May 30, 2000, must be approved by USEPA before being used for CWA purposes. The final rule also provides that standards already in effect and submitted to USEPA by May 30, 2000, may be used for CWA purposes, whether or not approved by USEPA.

4. **Antidegradation Policy.** 40 CFR section 131.12 requires that the State water quality standards include an antidegradation policy consistent with the federal policy. The State Water Board established California's antidegradation policy in Resolution No. 68-16

("Statement of Policy with Respect to Maintaining High Quality of Waters in California"). Resolution No. 68-16 incorporates the federal antidegradation policy where the federal policy applies under federal law. Resolution No. 68-16 requires that existing water quality be maintained unless degradation is justified based on specific findings. The Basin Plan implements, and incorporates by reference, both the State and federal antidegradation policies. The permitted discharge must be consistent with the antidegradation provision of 40 CFR section 131.12 and Resolution No. 68-16.

5. **Anti-Backsliding Requirements.** Sections 402(o)(2) and 303(d)(4) of the CWA and 40 CFR section 122.44(l) prohibit backsliding in NPDES permits. These anti-backsliding provisions require that effluent limitations in a reissued permit must be as stringent as those in the previous permit, with some exceptions in which limitations may be relaxed.

6. **Endangered Species Act Requirements.** This Order does not authorize any act that results in the taking of a threatened or endangered species or any act that is now prohibited, or becomes prohibited in the future, under either the California Endangered Species Act (Fish and Game Code sections 2050 to 2097) or the Federal Endangered Species Act (16 USCA sections 1531 to 1544). This Order requires compliance with effluent limitations, receiving water limitations, and other requirements to protect the beneficial uses of waters of the State. The Discharger is responsible for meeting all requirements of the applicable Endangered Species Act.

D. Impaired Water Bodies on CWA 303(d) List

On November 12, 2010, USEPA approved the list of impaired water bodies, prepared by the State Water Board pursuant to section 303(d) of the CWA, which are not expected to meet applicable water quality standards after implementation of technology-based effluent limitations for point sources. The 303(d) list for waters in the vicinity of the Tijuana River, Tijuana River Estuary, and SBOO include:

1. Pacific Ocean Shoreline, Otay Valley HA, at Carnation Ave and Camp Surf Jetty for total coliform
2. Pacific Ocean Shoreline, Imperial Beach Pier for fecal coliform, total coliform, and PCBs (fish tissue)
3. Pacific Ocean Shoreline, Tijuana HU, at end of Seacoast Drive for enterococcus, fecal coliform, and total coliform
4. Pacific Ocean Shoreline, Tijuana HU, at 3/4 mile North of Tijuana River for enterococcus, fecal coliform, and total coliform
5. Pacific Ocean Shoreline, Tijuana HU, at Tijuana River mouth for enterococcus, fecal coliform, and total coliform
6. Pacific Ocean Shoreline, Tijuana HU, at Monument Road for fecal coliform and total coliform
7. Pacific Ocean Shoreline, Tijuana HU, at the U.S. Border for enterococcus, fecal coliform, and total coliform
8. Tijuana River, Tijuana HU, eutrophic, indicator bacteria, low dissolved oxygen, pesticides, phosphorus, sedimentation/ siltation, selenium, solids, surfactants (MBAS), synthetic organics, total nitrogen as N, toxicity, trace elements, and trash.
9. Tijuana River Estuary, Tijuana HU, eutrophic, indicator bacteria, lead, nickel, pesticides, thallium, trash, and turbidity.

Currently, there is no effective total maximum daily load (TMDL) for the Pacific Ocean near the SBOO. A draft TMDL is under development for the Tijuana River for solids, turbidity, and trash.

E. Other Plans, Polices and Regulations

1. **Secondary Treatment Regulations.** 40 CFR part 133 establishes the minimum levels of effluent quality to be achieved by secondary treatment. These limitations, established by the USEPA, are incorporated into this Order, except where more stringent limitations are required by other applicable plans, policies, or regulations.

2. **Storm Water.** Sewage treatment works with a design flow of 1.0 MGD or greater are required to comply with Water Quality Order No. 97-03-DWQ (NPDES General Permit No. CAS000001), *Waste Discharge Requirements for Dischargers of Storm Water Associated with Industrial Activities, Excluding Construction Activities*.

IV. RATIONALE FOR EFFLUENT LIMITATIONS AND DISCHARGE SPECIFICATIONS

The CWA requires point source dischargers to control the amount of conventional, non-conventional, and toxic pollutants that are discharged into the waters of the United States. The control of pollutants discharged is established through effluent limitations and other requirements in NPDES permits. There are two principal bases for effluent limitations in the Code of Federal Regulations: 40 CFR section 122.44(a) requires that permits include applicable technology-based limitations and standards; and 40 CFR section 122.44(d) requires that permits include water quality-based effluent limitations to attain and maintain applicable numeric and narrative water quality criteria to protect the beneficial uses of the receiving water.

A. Discharge Prohibitions

This Order retains the discharge prohibitions from Order No. 96-50, as described below. Compliance determination language is included in section VII of this Order to accurately describe how violations of these prohibitions are determined. Discharges from the Facilities to surface waters of the United States in violation of prohibitions contained in this Order are violations of the CWA and therefore are subject to third party lawsuits. Discharges from the Facilities to land that are not discharges to waters of the United States are violations governed by the Water Code and are not subject to third party lawsuits under the CWA because the Water Code does not contain provisions allowing third party lawsuits.

Discharge Prohibitions III.A through III.C have been carried over from Order No. 96-50. Prohibition III.A clearly defines what types of discharges are prohibited. This prohibition is based on 40 CFR section 122.21(a), duty to apply, and CWC section 13260, which requires filing a ROWD before discharges can occur. Discharges not described in the ROWD, and subsequently in this Order, are prohibited. Prohibition III.B and III.C include discharge prohibitions of the Ocean Plan and the Basin Plan.

Order No. 96-50 prohibited bypassing of untreated wastes, except as provided for in 40 CFR section 122.41(m). Because this prohibition is expressly included in Attachment D of this Order, this requirement is not retained in section III of this Order.

Order No. 96-50 prohibited discharges to the Pacific Ocean through the SBOO in excess of a 25.0 MGD flow rate at any time unless the discharger obtains revised waste discharge requirements authorizing an increased flow rate. Because this prohibition is now included as an effluent limitation, this requirement is not retained in section III of this Order.

Order No. 96-50 prohibited discharges of waste to Areas of Special Biological Significance and the discharge of sludge to the ocean. Because these prohibitions are expressly included in the Ocean Plan prohibitions, which are included in this Order as Prohibition III.B and

incorporated in Attachment G of this Order, these specific requirements are not retained in section III of this Order.

B. Technology-Based Effluent Limitations

1. Scope and Authority

Section 301(b) of the CWA and implementing USEPA permit regulations at 40 CFR section 122.44(a)(1) require that permits include conditions meeting applicable technology-based requirements at a minimum, and any more stringent effluent limitations necessary to meet applicable water quality standards.

Regulations promulgated in 40 CFR section 125.3 require technology-based effluent limitations to be placed in NPDES permits.

The Federal Water Pollution Control Act Amendments of 1972 (PL 92-500) established the minimum performance requirements attainable through the application of secondary treatment [defined in 40 CFR section 304(d)(1)].

Based on this statutory requirement, USEPA developed secondary treatment regulations, which are specified in 40 CFR part 133. These technology-based regulations apply to all wastewater treatment plants and identify the minimum level of effluent quality attainable by secondary treatment in terms of Biochemical Oxygen Demand (5-day) (BOD_5), TSS, and pH. In lieu of effluent limitations for BOD_5 where BOD_5 may not provide a reliable measure of the oxygen demand of the effluent, 40 CFR section 133.102(a)(4) allows for effluent limitations for $CBOD_5$ to be applied.

The Ocean Plan is applicable, in its entirety, to point source discharges to the ocean. Therefore, the discharge of wastewater to the Pacific Ocean at Discharge Point No. 001 is subject to the Ocean Plan. The Ocean Plan establishes water quality objectives, general requirements for management of waste discharged to the ocean, effluent quality requirements for waste discharges, discharge prohibitions, and general provisions. Further, Table 2 of the Ocean Plan establishes technology-based effluent limitations for publicly-owned treatment works (POTW) and industrial discharges for which Effluent Limitation Guidelines have not been established pursuant to sections 301, 302, or 306 of the CWA (summarized in Table F-6 below). Although this Facility does not meet the definition of a POTW, the Facility is a federally-owned treatment works that serves the same functions. Thus, this Order established numeric effluent limitations based on Table 2 of the Ocean Plan.

The discharge authorized by this Order must meet minimum federal technology-based requirements based on Secondary Treatment Standards at 40 CFR part 133 and technology-based requirements contained in Table 2 of the Ocean Plan.

2. Applicable Technology-Based Effluent Limitations

This Order does not retain the “Maximum at Any Time” (instantaneous maximum) effluent limitations for $CBOD_5$ and TSS contained in Order No. 96-50 which were established using best professional judgment. Recent attempts to derive instantaneous maximum effluent limitations based on the secondary treatment standards at 40 CFR part 133 using appropriate statistical approaches did not yield results similar to the previous instantaneous maximum effluent limitations; therefore, based on this new information, retaining the previous instantaneous maximum effluent limitations for $CBOD_5$ and TSS in this Order is not supported.

Technology-based regulations, specified in 40 CFR part 133, are summarized in the table below.

Table F-8. Summary of Technology-Based Effluent Limitations Based on Secondary Treatment Standards

Parameter	Monthly Average	Weekly Average	30-day Percent Removal
$CBOD_5$	25 mg/L	40 mg/L	85%
TSS	30 mg/L	45 mg/L	85%
pH	Effluent values shall remain within the limits of 6.0 to 9.0 at all times		
Percent Removal	The 30-day average percent removal of $CBOD_5$ and TSS shall not be less than 85 percent.		

Technology-based regulations, specified in Table 2 of the Ocean Plan, are summarized below:

Table F-9. Summary of Technology-Based Effluent Limitations Based on Table 2 of the Ocean Plan

Parameter	Unit	Average Monthly	Average Weekly	Instantaneous Minimum	Instantaneous Maximum
Grease and Oil	mg/L	25	40		75
TSS	mg/L	60[1]	--		--
Settleable Solids	mL/L	1.0	1.5		3.0
Turbidity	NTU	75	100		225
pH	standard units	--	--	6.0	9.0
Percent Removal	Dischargers shall, as a 30-day average, remove 75 percent of suspended solids from the influent stream before discharging wastewaters to the ocean, except that the effluent limitation to be met shall not be lower than 60 mg/L.				

Because secondary treatment standards contain effluent limitations for TSS that are more stringent than Table 2 of the Ocean Plan, the more stringent effluent limitations for TSS will be applied to discharges from the Facility.

The current permitted flow is an instantaneous maximum of 25 MGD based on the Facility's design capacity. As discussed in section II of this Fact Sheet, the Facility was upgraded to provide secondary treatment. The advanced primary treatment facility has a peak hydraulic capacity of 100 MGD, peak design flow rate of 75 MGD, and an average design flow rate of 25 MGD. The secondary treatment design capacity is 25 MGD with a peaking factor of approximately 2. Therefore, the effluent limitation for flow is being modified to an average monthly flow rate of 25 MGD.

C. Water Quality-Based Effluent Limitations (WQBELs)

1. Scope and Authority

Section 301(b) of the CWA and 40 CFR section 122.44(d) require that permits include limitations more stringent than applicable federal technology-based requirements where necessary to achieve applicable water quality standards.

Section 122.44(d)(1)(i) of 40 CFR requires that permits include effluent limitations for all pollutants that are or may be discharged at levels that have the reasonable potential to cause or contribute to an exceedance of a water quality standard, including numeric and narrative objectives within a standard. Where reasonable potential has been established for a pollutant, but there is no numeric criterion or objective for the pollutant, water quality-based effluent limitations (WQBELs) must be established using: (1) USEPA criteria guidance under section 304(a) of the CWA, supplemented where necessary by other relevant information; (2) an indicator parameter for the pollutant of concern; or (3) a calculated numeric water quality criterion, such as a proposed state criterion or policy interpreting the state's narrative criterion, supplemented with other relevant information, as provided in 40 CFR section 122.44(d)(1)(vi).

The process for determining reasonable potential and calculating WQBELs when necessary is intended to protect the designated uses of the receiving water as specified in the Basin Plan and Ocean Plan, and achieve applicable water quality objectives and criteria that are contained in the Ocean Plan.

2. Applicable Beneficial Uses and Water Quality Criteria and Objectives

The Basin Plan and Ocean Plan designate beneficial uses, establish water quality objectives, and contain implementation programs and policies to achieve those objectives for all waters.

a. Basin Plan. The beneficial uses specified in the Basin Plan applicable to the Pacific Ocean are summarized in section III.C.1 of this Fact Sheet.

The Basin Plan water quality objective for dissolved oxygen applicable to ocean waters is stated as follows: “The dissolved oxygen concentration in ocean waters shall not at any time be depressed more than 10 percent from that which occurs naturally, as the result of the discharge of oxygen demanding waste materials”.

The Basin Plan includes water quality objectives for pH applicable to the receiving water.

The Basin Plan states, “The pH value shall not be changed at any time more than 0.2 pH units from that which occurs naturally.”

b. Ocean Plan. The beneficial uses specified in the Ocean Plan for the Pacific Ocean are summarized in section III.C.2 of this Fact Sheet. The Ocean Plan also includes water quality objectives for the ocean receiving water for bacterial characteristics, physical characteristics, chemical characteristics, biological characteristics, and radioactivity.

Table 1 of the Ocean Plan includes the following water quality objectives for toxic pollutants and whole effluent toxicity:

i. 6-month median, daily maximum, and instantaneous maximum objectives for 21 chemicals and chemical characteristics, including total chlorine residual and chronic toxicity, for the protection of marine aquatic life.

ii. 30-day average objectives for 20 non-carcinogenic chemicals for the protection of human health.

iii. 30-day average objectives for 42 carcinogenic chemicals for the protection of human health.

iv. Daily maximum objectives for acute and chronic toxicity.

3. Determining the Need for WQBELs

Order No. 96-50 contained effluent limitations for non-conventional and toxic pollutant parameters in Table B of the 1990 California Ocean Plan. For this Order, the need for effluent limitations based on water quality objectives in Table 1 of the 2012 Ocean Plan was re-evaluated in accordance with 40 CFR section 122.44(d) and guidance for statistically determining the “reasonable potential” for a discharged pollutant to exceed an objective, as outlined in the revised Technical Support Document for Water Quality-

Based Toxics Control (TSD; EPA/505/2-90-001, 1991) and the Ocean Plan Reasonable Potential Analysis (RPA) Amendment that was adopted by the State Water Board on April 21, 2005. The statistical approach combines knowledge of effluent variability (as estimated by a coefficient of variation) with the uncertainty due to a limited amount of effluent data to estimate a maximum effluent value at a high level of confidence. This estimated maximum effluent value is based on a lognormal distribution of daily effluent values. Projected receiving water values (based on the estimated maximum effluent value or the reported maximum effluent value and minimum probable initial dilution) can then be compared to the appropriate objective to determine the potential for an exceedance of that objective and the need for an effluent limitation. According to the Ocean Plan amendment, the RPA can yield three endpoints: 1) Endpoint 1, an effluent limitation is required and monitoring is required; 2) Endpoint 2, an effluent limitation is not required and the San Diego Water Board may require monitoring; 3) Endpoint 3, the RPA is inconclusive, monitoring is required, and an existing effluent limitation may be retained or a permit reopener clause may be included to allow inclusion of an effluent limitation if future monitoring warrants the inclusion. Endpoint 3 is typically the result when there are fewer than 16 data points and all are censored data (i.e., below quantitation or method detection levels for an analytical procedure). If no data was provided for a parameter, and an RPA could not be conducted for that parameter, reasonable potential for that parameter was carried over to this Order based on the requirements of federal and State anti-backsliding regulations. Data for all parameters was available to conduct an RPA.

The implementation provisions for Table 1 in section III.C of the Ocean Plan specify that the minimum initial dilution is the lowest average initial dilution within any single month of the year. Dilution estimates are to be based on observed waste flow characteristics, observed receiving water density structure, and the assumption that no currents of sufficient strength to influence the initial dilution process flow across the discharge structure.

Prior to issuance of Order No. 96-50, the State Water Board had determined the minimum initial dilution factor (Dm), expressed as parts seawater per part wastewater, for the SBOO to be 100. This determination was based on 660 diffuser ports being open and an average daily flow rate of 174 MGD, although, at the time, the total permitted flow rate through the SBOO was only 25 MGD. Prior to issuance of Order No. R9-2006-0067, NPDES Permit No. CA0109045, *Waste Discharge Requirements for the City of San Diego South Bay Water Reclamation Plant Discharge to the Pacific Ocean via the South Bay Ocean Outfall*, the Dm was recalculated in order to account for the maximum permitted effluent flow through the SBOO (25 MGD from the Facility and 15 MGD from SBWRP) and the current configuration of the diffuser (72 open ports). The new recalculated Dm was determined as 94.6 using the USEPA approved computer modeling application Visual Plumes with the UM3 model. There is insufficient data for the SBOO's effluent at this time to reevaluate Dm. Further, the Facility's upgrade to secondary treatment is expected to result in lower conductivity and thus more dilution. Therefore, the current Dm of 94.6 will be applied to WQBELs established herein.

Conventional pollutants were not considered as part of the RPA. Technology-based effluent limitations for these pollutants are included in this Order as described in section IV.B of this Fact Sheet.

Using the RPcalc 2.0 software tool developed by the State Water Board for conducting reasonable potential analyses, the San Diego Water Board has conducted the RPA for the parameters listed in Table F-10. For parameters that do not display reasonable potential, this Order includes desirable maximum effluent concentrations which were

derived using effluent limitation determination procedures described below and are referred to in this Order as "performance goals." A narrative limit statement to comply with all Ocean Plan objectives requirements is provided for those parameters not displaying reasonable potential. The Discharger is required to monitor for these parameters pursuant to the Monitoring and Reporting Program (MRP, Attachment E) in order to gather data for use in reasonable potential analyses for future permit reissuances.

Effluent data provided in the Discharger's monitoring reports for the Facility from July 2012[1] to October 2013 were used in the RPA. A minimum probable initial dilution of 94.6 was considered in this evaluation.

A summary of the RPA results is provided below:

Table F-10. RPA Results Summary

Parameter	Units[10]	n[1]	MEC[2,4]	Most Stringent Criteria	Background	RPA Endpoint[3]
Arsenic	µg/L	61	216	8[5]	3[6]	2
Cadmium	µg/L	61	7.5	1[5]	0	2
Chromium, Total Recoverable	µg/L	61	158	2[5]	0	2
Copper	µg/L	61	42.8	3[5]	2[6]	2
Lead	µg/L	61	120	2[5]	0	2
Mercury	µg/L	61	13.3	0.04[5]	0.0005[6]	1
Nickel	µg/L	59	29.5	5[5]	0	2
Selenium	µg/L	60	54.6	15[5]	0	2
Silver	µg/L	57	<0.7	0.7[5]	0.16[6]	2
Zinc	µg/L	61	1400	20[5]	8[6]	1
Cyanide	µg/L	57	<0.02	1[5]	0	2
Total Chlorine Residual	µg/L	423	0.2	2[5]	0	2
Ammonia	µg/L	61	39.4	600[5]	0	2
Acute Toxicity	TUa	57	8	0.3[7]	0	1
Chronic Toxicity	TUc	50	200	1[7]	0	1
Phenolic Compounds[10]	µg/L	65	<1.26	30[5]	0	2
Chlorinated Phenolics[10]	µg/L	65	<2	1[5]	0	2
Endosulfan[10]	µg/L	56	<0.02	0.009[5]	0	2
Endrin	µg/L	57	<0.002	0.002[5]	0	2
HCH[10]	µg/L	57	<0.005	0.004[5]	0	2
Radioactivity	pCi/L	--	--	[8]	0	--
Acrolein	µg/L	16	<2.6	220[9]	0	2
Antimony	µg/L	61	278	1,200[9]	0	2
Bis(2-chloroethoxyl)methane	µg/L	30	<0.27	4.4[9]	0	2
Bis(2-chloroisopropyl)ether	µg/L	16	<0.38	1,200[9]	0	2
Chlorobenzene	µg/L	16	<0.31	570[9]	0	2
Chromium (III)	µg/L	61	158	190,000[9]	0	2
Di-n-butyl phthalate	µg/L	16	<0.25	3,500[9]	0	2
Dichlorobenzenes[10]	µg/L	16	<0.55	5,100[9]	0	2
Diethyl phthalate	µg/L	16	<1	33,000[9]	0	2
Dimethyl phthalate	µg/L	32	<0.22	820,000[9]	0	2
4,6-Dinitro-2-methylphenol	µg/L	16	<1	220[9]	0	2
2,4-Dinitrophenol	µg/L	16	<1	4.0[9]	0	2

[1] This time frame corresponds to the dates that the Discharger started to come into substantial compliance with NPDES Permit effluent limitations, as explained in section II of this Fact Sheet.

Parameter	Units[10]	n[1]	MEC[2,4]	Most Stringent Criteria	Background	RPA Endpoint[3]
Ethylbenzene	µg/L	16	<0.38	4,100[9]	0	2
Fluoranthene	µg/L	16	<0.13	15[9]	0	2
Hexachlorocyclopentadiene	µg/L	16	<1	58[9]	0	2
Nitrobenzene	µg/L	16	<0.23	4.9[9]	0	2
Thallium	µg/L	61	565	2[9]	0	1
Toluene	µg/L	16	1.4	85,000[9]	0	2
Tributyltin	µg/L	16	<0.004	0.0014[9]	0	3
1,1,1-Trichloroethane	µg/L	16	<0.23	540,000[9]	0	2
Acrylonitrile	µg/L	16	<1.5	0.10[9]	0	2
Aldrin	µg/L	53	<0.002	0.000022[9]	0	2
Benzene	µg/L	16	<0.47	5.9[9]	0	2
Benzidine	µg/L	16	<1	0.000069[9]	0	3
Beryllium	µg/L	69	<1.8	0.033[9]	0	2
Bis(2-chloroethyl) ether	µg/L	16	<0.42	0.045[9]	0	2
Bis(2-ethylhexyl) phthalate	µg/L	16	9	3.5[9]	0	2
Carbon tetrachloride	µg/L	16	<0.38	0.90[9]	0	2
Chlordane[10]	µg/L	138	<10	0.000023[9]	0	3
Chlorodibromomethane (dibromochloromethane)	µg/L	16	<0.36	8.6[9]	0	3
Chloroform	µg/L	16	6.9	130[9]	0	2
DDT[10]	µg/L	69	<3.007	0.00017[9]	0	3
1,4-Dichlorobenzene	µg/L	16	<0.26	18[9]	0	2
3,3-Dichlorobenzidine	µg/L	16	<0.0062	0.0081[9]	0	2
1,2-Dichloroethane	µg/L	16	<0.25	28[9]	0	2
1,1-Dichloroethylene	µg/L	16	<0.07	0.9[9]	0	2
Dichlorobromomethane	µg/L	16	4.1	6.2[9]	0	2
Dichloromethane (Methylene Chloride)	µg/L	16	<0.43	450[9]	0	2
1,3-dichloropropene (1,3-Dichloropropylene)	µg/L	16	<0.32	8.9[9]	0	2
Dieldrin	µg/L	69	<0.002	0.00004[9]	0	2
2,4-Dinitrotoluene	µg/L	16	<0.45	2.6[9]	0	2
1,2-Diphenylhydrazine	µg/L	16	<1	0.16[9]	0	2
Halomethanes[10]	µg/L	16	<2.43	130[9]	0	2
Heptachlor	µg/L	69	<0.002	0.00005[9]	0	2
Heptachlor Epoxide	µg/L	69	<0.003	0.00002[9]	0	3
Hexachlorobenzene	µg/L	16	<0.35	0.00021[9]	0	3
Hexachlorobutadiene	µg/L	16	<0.56	14[9]	0	2
Hexachloroethane	µg/L	16	<0.25	2.5[9]	0	2
Isophorone	µg/L	16	<0.64	730[9]	0	2
N-nitrosodimethylamine	µg/L	69	<1	7.3[9]	0	2
N-nitrosodi-N-propylamine	µg/L	69	<0.58	0.38[9]	0	2
N-nitrosodiphenylamine	µg/L	69	<0.12	2.5[9]	0	2
PAHs[10]	µg/L	60	<0.34	0.0088[9]	0	2
PCBs[10]	µg/L	65	<2.8	0.000019[9]	0	3
TCDD equivalents[10]	pg/L	14	0.0001736	0.0000039[9]	0	1
1,1,2,2-Tetrachoroethane	µg/L	16	<0.42	2.3[9]	0	2
Tetrachloroethylene (Tetrachloroethene)	µg/L	16	<0.31	2.0[9]	0	2
Toxaphene	µg/L	69	<0.5	0.00021[9]	0	3

Parameter	Units[10]	n[1]	MEC[2,4]	Most Stringent Criteria	Background	RPA Endpoint[3]
Trichloroethylene (Trichloroethene)	µg/L	16	<0.23	27[9]	0	2
1,1,2-Trichloroethane	µg/L	16	<0.34	9.4[9]	0	2
2,4,6-Trichlorophenol	µg/L	69	<1	0.29[9]	0	2
Vinyl Chloride	µg/L	16	<0.47	36[9]	0	2

1 Number of data points available for the RPA.
2 If there is a detected value, the highest reported value is summarized in the table. If there are no detected values, the lowest MDL is summarized in the table.
3 End Point 1 – Reasonable Potential (RP) determined, limit required, monitoring required.
End Point 2 – Discharge determined not to have RP, monitoring may be established.
End Point 3 – RPA was inconclusive, carry over previous limitations if applicable, and establish monitoring.
4 Note that the reported MEC does not account for dilution. The RPA does account for dilution; therefore it is possible for a parameter with an MEC in exceedance of the most stringent criteria not to present a RP (i.e. Endpoint 2).
5 Based on the 6-Month Median in the Table 1 of the Ocean Plan.
6 Background concentrations contained in Table 3 of the Ocean Plan.
7 Based on the Daily Maximum in Table 1 of the Ocean Plan.
8 Not to exceed limits specified in title 17, division 1, chapter 5, subchapter 4, group 3, article 3, section 30253 of the California Code of Regulations. Levels of radioactivity that exceed the applicable criteria are not expected in the discharge.
9 Based on 30-Day Average in Table 1 of the Ocean Plan.
10 See Attachment A for definitions of abbreviations and a glossary of common terms used in this Order.

Reasonable potential to cause or contribute to an exceedance of water quality objectives contained within the Ocean Plan (i.e. Endpoint 1) was determined for zinc, mercury, acute toxicity, chronic toxicity, TCDD equivalents, and thallium. Thus effluent limitations for these parameters have been retained.

For parameters for which the RPA was inconclusive (Endpoint 3), reasonable potential was not determined and effluent limitations are retained. Endpoint 3 applied to tributyltin, benzidine, chlordane, chlorodibromomethane, DDT, heptachlor epoxide, hexachlorobenzene, PCBs, and toxaphene. Thus effluent limitations for these parameters were retained.

Consistent with 40 CFR section 122.44(l)(2)(i)(B), effluent limitations from Order No. 96-50 were not retained for parameters for which there was no RP (Endpoint 2). Instead, performance goals have been assigned for these parameters.

The monitoring requirements in Attachment E of this Order are designed to obtain additional information for these constituents to determine if reasonable potential exists for these parameters in future permit renewals and/or updates.

4. WQBEL Calculations

a. From the Table 1 water quality objectives of the Ocean Plan, effluent limitations and performance goals are calculated according to the following equations:

For all pollutants, except for acute toxicity (if applicable) and radioactivity:

$Ce = Co + Dm (Co – Cs)$ where,
Ce = the effluent limitation (µg/L)

Co = the water quality objective to be met at the completion of initial dilution (µg/L)

Cs = background seawater concentration (µg/L), from Table 3 of the Ocean Plan

Dm = minimum probable initial dilution expressed as parts seawater per part wastewater

For acute toxicity (if applicable):

Ce = Ca + (0.1) Dm (Ca) where,

Ce = the effluent limitation

Ca = the concentration (water quality objective) to be met at the edge of the acute mixing zone

Dm = minimum probable initial dilution expressed as parts seawater per part wastewater (This equation applies only when Dm > 24)

b. As discussed in section IV.C.3 above, the Dm has been determined to be 94.6 by the San Diego Water Board through the application of USEPA's dilution model, Visual Plumes.

c. Table 3 of the Ocean Plan establishes background concentrations for some pollutants to be used when determining reasonable potential (represented as "Cs"). In accordance with Table 1 implementing procedures, Cs equals zero for all pollutants not established in Table 3. The background concentrations provided in Table 3 are summarized below:

Table F-11. Pollutants Having Background Concentrations

Pollutant	Background Seawater Concentration
Arsenic	3 µg/L
Copper	2 µg/L
Mercury	0.0005 µg/L
Silver	0.16 µg/L
Zinc	8 µg/L

d. Section 122.45(f)(1) of 40 CFR requires effluent limitations be expressed in terms of mass, with some exceptions, and 40 CFR section 122.45(f)(2) allows pollutants that are limited in terms of mass to additionally be limited in terms of other units of measurement. Section III.C.4.j of the Ocean Plan requires that mass emission rate limitations be established in addition to the effluent concentration limitations for all Table 1 parameters. This Order includes effluent limitations expressed in terms of mass and concentration. In addition, pursuant to the exceptions to mass limitations provided in 40 CFR section 122.45(f)(1), some effluent limitations are not expressed in terms of mass, such as pH and temperature. Exceptions to mass limitations are also allowable where effluent limitations are based on applicable standards expressed in terms of concentration (e.g., CTR criteria and MCLs) and mass limitations are not necessary to protect the beneficial uses of the receiving water.

Mass-based effluent limitations were calculated using the following equation:

lb/day = Permitted Flow (MGD) x Pollutant Concentration (mg/L) x 8.34

e. The calculations for the effluent limitations for zinc are shown below as an example of how effluent limitations and performance goals have been calculated.

Table F-12. Water Quality Objectives from the Ocean Plan for Zinc

Parameter	Units	6-Month Median	Daily Maximum	Instantaneous Maximum
zinc	µg/L	20	80	200

Using the equations in sections IV.C.4.a and d above, effluent limitations are calculated for zinc as follows.

Ce = Co + Dm (Co – Cs)

Ce = 2 + 94.6 (20 – 0) = 1,155.2 µg/L (6-Month Median)

Ce = 8 + 94.6 (80 – 0) = 6,891.2 µg/L (Daily Maximum)

Ce = 60 + 94.6 (200 – 0) = 18,363.2 µg/L (Instantaneous Maximum)

lb/day = Permitted Flow (MGD) x Pollutant Concentration (mg/L) x 8.34

lb/day = 25 MGD x 1.1552 mg/L x 8.34 = 241 lb/day

lb/day = 25 MGD x 6.8912 mg/L x 8.34 = 1437 lb/day

lb/day = 25 MGD x 1.83632 mg/L x 8.34 = 3829 lb/day

Due to a decrease in the minimum probable initial dilution (explained in section IV.C.3 above), the calculated effluent limitations for zinc are less than those in the previous Order.

Based on the implementing procedures described above, effluent limitations and performance goals have been calculated for all pollutants in Table 1 of the Ocean Plan and incorporated into this Order.

f. A summary of the WQBELs established in this Order is provided below:

Table F-13. Summary of Water Quality-based Effluent Limitations, Discharge Point No. 001

Parameter	Unit[1]	Water Quality-Based Effluent Limitations[2]			
		6-Month Median	Maximum Daily	Instantaneous Maximum	30-Day Average
BASED ON OCEAN PLAN OBJECTIVES FOR PROTECTION OF MARINE AQUATIC LIFE					
Mercury, Total Recoverable	µg/L	3.78E+00	1.52E+01	3.82E+01	--
	lbs/day	7.87E-01	3.18E+00	7.96E+00	--
Zinc	µg/L	1.16E+03	6.89E+03	1.84E+04	
	lbs/day	2.41E+02	1.44E+03	3.83E+03	
Acute Toxicity	TUa	--	3.2	--	--
Chronic Toxicity	TUc	--	95.6	--	--

BASED ON OCEAN OBJECTIVES FOR PROTECTION OF HUMAN HEALTH – CARCINOGENS					
Thallium, Total Recoverable	µg/L	--	--	--	1.91E+02
	lbs/day	--	--	--	3.99E+01
Tributyltin	µg/L	--	--	--	1.34E-01
	lbs/day	--	--	--	2.79E-02
Benzidine	µg/L	--	--	--	6.60E-03
	lbs/day	--	--	--	1.38E-03
Chlordane[1]	µg/L	--	--	--	2.20E-03
	lbs/day	--	--	--	4.58E-04
Chlorodibromomethane (dibromochloromethane)	µg/L	--	--	--	8.22E+02
	lbs/day	--	--	--	1.71E+02
DDT[1]	µg/L				1.63E-02
	lbs/day				3.39E-03
Heptachlor Epoxide	µg/L	--	--	--	1.91E-03
	lbs/day	--	--	--	3.99E-04
Hexachlorobenzene	µg/L	--	--	--	2.01E-02
	lbs/day	--	--	--	4.19E-03
PCBs[1]	µg/L	--	--	--	1.82E-03
	lbs/day	--	--	--	3.79E-04
TCDD equivalents[1]	µg/L	--	--	--	3.73E-07
	lbs/day	--	--	--	7.77E-08
Toxaphene	µg/L	--	--	--	2.01E-02
	lbs/day	--	--	--	4.19E-03

1 See Attachment A for definitions of abbreviations and a glossary of common terms used in this Order.

2 Scientific "E" notation is used to express certain values. In scientific "E" notation, the number following the "E" indicates that position of the decimal point in the value. Negative numbers after the "E" indicate that the value is less than 1, and positive numbers after the "E" indicate that the value is greater than 1. In this notation a value of 6.1E-02 represents 6.1×10^{-2} or 0.061, 6.1E+02 represents 6.1×10^{2} or 610, and 6.1E+00 represents 6.1×10^{0} or 6.1.

g. Parameters that do not have reasonable potential (as determined in section IV.C.3 of this Fact Sheet) are listed as performance goals in this Order. Performance goals serve to ensure existing treatment levels and effluent quality is sufficient to support State and federal antidegradation policies. Additionally, performance goals provide all interested parties with information regarding the expected levels of pollutants in the discharge that should not be exceeded in order to maintain the water quality objectives established in the Ocean Plan. Performance goals are not limitations or standards for the regulation of the discharge. Effluent concentrations above the performance goals will not be considered as violations of the permit, but serve as red flags that indicate water quality concerns. Repeated red flags may prompt the San Diego Water Board to reopen and amend the permit to replace performance goals for parameters of concern with effluent limitations, or the San Diego Water Board may coordinate such actions with the next permit renewal.

The following table lists the performance goals established by this Order. A minimum probable initial dilution factor of 94.6:1 was used in establishing the performance goals.

Table F-14. Summary of Performance Goals

Parameter	Unit[1]	Performance Goals[2]			
		6-Month Median	Maximum Daily	Instantaneous Maximum	30-Day Average
BASED ON OCEAN PLAN OBJECTIVES FOR PROTECTION OF MARINE AQUATIC LIFE					
Arsenic, Total Recoverable	µg/L	4.81E+02	2.78E+03	7.36E+03	--
	lbs/day	1.00E+02	5.79E+02	1.54E+03	--
Cadmium, Total Recoverable	µg/L	9.56E+01	3.82E+02	9.56E+02	--
	lbs/day	1.99E+01	7.97E+01	1.99E+02	--
Chromium VI, Total Recoverable [3]	µg/L	1.91E+02	7.65E+02	1.91E+03	--
	lbs/day	3.99E+01	1.59E+02	3.99E+02	--
Copper, Total Recoverable	µg/L	9.76E+01	9.58E+02	2.68E+03	
	lbs/day	2.03E+01	2.00E+02	5.59E+02	
Lead, Total Recoverable	µg/L	1.91E+02	7.65E+02	1.91E+03	--
	lbs/day	3.99E+01	1.59E+02	3.99E+02	--
Nickel, Total Recoverable	µg/L	4.78E+02	1.91E+03	4.78E+03	--
	lbs/day	9.97E+01	3.99E+02	9.97E+02	--
Selenium, Total Recoverable	µg/L	1.43E+03	5.74E+03	1.43E+04	--
	lbs/day	2.99E+02	1.20E+03	2.99E+03	--
Silver, Total Recoverable	µg/L	5.18E+01	2.53E+02	6.54E+02	--
	lbs/day	1.08E+01	5.27E+01	1.36E+02	--
Cyanide, Total Recoverable [4]	µg/L	9.56E+01	3.82E+02	9.56E+02	--
	lbs/day	1.99E+01	7.97E+01	1.99E+02	--
Total Chlorine Residual[5]	µg/L	1.91E+02	7.65E+02	5.74E+03	
	lbs/day	3.99E+01	1.59E+02	1.20E+03	
Ammonia (expressed as nitrogen)	µg/L	5.74E+04	2.29E+05	5.74E+05	--
	lbs/day	1.20E+04	4.78E+04	1.20E+05	--
Phenolic Compounds (non-chlorinated)[1]	µg/L	2.87E+03	1.15E+04	2.87E+04	--
	lbs/day	5.98E+02	2.39E+03	5.98E+03	--
Chlorinated Phenolics[1]	µg/L	9.56E+01	3.82E+02	9.56E+02	--
	lbs/day	1.99E+01	7.97E+01	1.99E+02	--
Endosulfan[1]	µg/L	8.60E-01	1.72E+00	2.58E+00	--
	lbs/day	1.79E-01	3.59E-01	5.38E-01	--
Endrin	µg/L	1.91E-01	3.82E-01	5.74E-01	
	lbs/day	3.99E-02	7.97E-02	1.20E-01	
HCH[1]	µg/L	3.82E-01	7.65E-01	1.15E+00	
	lbs/day	7.97E-02	1.59E-01	2.39E-01	

Parameter	Unit[1]	Performance Goals[2]			
		6-Month Median	Maximum Daily	Instantaneous Maximum	30-Day Average
Radioactivity	pCi/l	Not to exceed limits specified in title 17, division 1, chapter 5, subchapter 4, group 3, article 3, section 30253 of the California Code of Regulations, Reference to section 30253 is prospective, including future changes to any incorporated provisions of federal law, as the changes take effect.			
BASED ON OCEAN PLAN OBJECTIVES FOR PROTECTION OF HUMAN HEALTH – NONCARCINOGENS					
Acrolein	µg/L	--	--	--	2.10E+04
	lbs/day	--	--	--	4.39E+03
Antimony	µg/L	--	--	--	1.15E+05
	lbs/day	--	--	--	2.39E+04
Bis(2-chloroethoxy) Methane	µg/L	--	--	--	4.21E+02
	lbs/day	--	--	--	8.77E+01
Bis(2-chloroisopropyl) Ether	µg/L	--	--	--	1.15E+05
	lbs/day	--	--	--	2.39E+04
Chlorobenzene	µg/L	--	--	--	5.45E+04
	lbs/day	--	--	--	1.14E+04
Chromium (III), Total Recoverable[3]	µg/L				1.82E+07
	lbs/day				3.79E+06
Di-n-butyl Phthalate	µg/L	--	--	--	3.35E+05
	lbs/day	--	--	--	6.98E+04
Dichlorobenzenes[1]	µg/L	--	--	--	4.88E+05
	lbs/day	--	--	--	1.02E+05
Diethyl Phthalate	µg/L	--	--	--	3.15E+06
	lbs/day	--	--	--	6.58E+05
Dimethyl Phthalate	µg/L	--	--	--	7.84E+07
	lbs/day	--	--	--	1.63E+07
4,6-dinitro-2-methylphenol	µg/L	--	--	--	2.10E+04
	lbs/day	--	--	--	4.39E+03
2,4-dinitrophenol	µg/L	--	--	--	3.82E+02
	lbs/day	--	--	--	7.97E+01
Ethylbenzene	µg/L	--	--	--	3.92E+05
	lbs/day	--	--	--	8.17E+04

Parameter	Unit[1]	Performance Goals[2]			
		6-Month Median	Maximum Daily	Instantaneous Maximum	30-Day Average
Fluoranthene	µg/L	--	--	--	1.43E+03
	lbs/day	--	--	--	2.99E+02
Hexachlorocyclopentadiene	µg/L	--	--	--	5.54E+03
	lbs/day	--	--	--	1.16E+03
Nitrobenzene	µg/L	--	--	--	4.68E+02
	lbs/day	--	--	--	9.77E+01
Toluene	µg/L	--	--	--	8.13E+06
	lbs/day	--	--	--	1.69E+06
1,1,1-trichloroethane	µg/L	--	--	--	5.16E+07
	lbs/day	--	--	--	1.08E+07
BASED ON OCEAN PLAN OBJECTIVES FOR PROTECTION OF HUMAN HEALTH - CARCINOGENS					
Acrylonitrile	µg/L	--	--	--	9.56E+00
	lbs/day	--	--	--	1.99E+00
Aldrin	µg/L	--	--	--	2.10E-03
	lbs/day	--	--	--	4.39E-04
Benzene	µg/L	--	--	--	5.64E+02
	lbs/day	--	--	--	1.18E+02
Beryllium	µg/L	--	--	--	3.15E+00
	lbs/day	--	--	--	6.58E-01
Bis(2-chloroethyl) Ether	µg/L	--	--	--	4.30E+00
	lbs/day	--	--	--	8.97E-01
Bis(2-ethlyhexyl) Phthalate	µg/L	--	--	--	3.35E+02
	lbs/day	--	--	--	6.98E+01
Carbon Tetrachloride	µg/L	--	--	--	8.60E+01
	lbs/day	--	--	--	1.79E+01
Chloroform	µg/L	--	--	--	1.24E+04
	lbs/day	--	--	--	2.59E+03
1,4-dichlorobenzene	µg/L	--	--	--	1.72E+03
	lbs/day	--	--	--	3.59E+02
3,3'-dichlorobenzidine	µg/L	--	--	--	7.74E-01
	lbs/day	--	--	--	1.61E-01
1,2-dichloroethane	µg/L	--	--	--	2.68E+03
	lbs/day	--	--	--	5.58E+02
1,1-dichloroethylene	µg/L	--	--	--	8.60E+01
	lbs/day	--	--	--	1.79E+01
Dichlorobromomethane	µg/L	--	--	--	5.93E+02
	lbs/day	--	--	--	1.24E+02

Parameter	Unit[1]	Performance Goals[2]			
		6-Month Median	Maximum Daily	Instantaneous Maximum	30-Day Average
Dichloromethane (Methylene Chloride)	µg/L	--	--	--	4.30E+04
	lbs/day	--	--	--	8.97E+03
1,3-dichloropropene (1,3-Dichloropropylene)	µg/L	--	--	--	8.51E+02
	lbs/day	--	--	--	1.77E+02
Dieldrin	µg/L	--	--	--	3.82E-03
	lbs/day	--	--	--	7.97E-04
2,4-dinitrotoluene	µg/L	--	--	--	2.49E+02
	lbs/day	--	--	--	5.18E+01
1,2-diphenylhydrazine	µg/L	--	--	--	1.53E+01
	lbs/day	--	--	--	3.19E+00
Halomethanes[1]	µg/L	--	--	--	1.24E+04
	lbs/day	--	--	--	2.59E+03
heptachlor	µg/L	--	--	--	4.78E-03
	lbs/day	--	--	--	9.97E-04
Hexachlorobutadiene	µg/L	--	--	--	1.34E+03
	lbs/day	--	--	--	2.79E+02
Hexachloroethane	µg/L	--	--	--	2.39E+02
	lbs/day	--	--	--	4.98E+01
Isophorone	µg/L	--	--	--	6.98E+04
	lbs/day	--	--	--	1.46E+04
N-nitrosodimethylamine	µg/L	--	--	--	6.98E+04
	lbs/day	--	--	--	1.46E+04
N-nitrosodi-N-propylamine	µg/L	--	--	--	3.63E+01
	lbs/day	--	--	--	7.57E+00
N-nitrosodiphenylamine	µg/L	--	--	--	2.39E+02
	lbs/day	--	--	--	4.98E+01
PAH[1]	µg/L	--	--	--	8.41E-01
	lbs/day	--	--	--	1.75E-01
1,1,2,2-tetrachloroethane	µg/L	--	--	--	2.20E+02
	lbs/day	--	--	--	4.58E+01
Tetrachloroethylene (Tetrachloroethene)	µg/L	--	--	--	1.91E+02
	lbs/day	--	--	--	3.99E+01
Trichloroethylene (Trichloroethene)	µg/L	--	--	--	2.58E+03
	lbs/day	--	--	--	5.38E+02
1,1,2-trichloroethane	µg/L	--	--	--	8.99E+02
	lbs/day	--	--	--	1.87E+02
2,4,6-trichlorophenol	µg/L	--	--	--	2.77E+01
	lbs/day	--	--	--	5.78E+00

Parameter	Unit[1]	Performance Goals[2]			
		6-Month Median	Maximum Daily	Instantaneous Maximum	30-Day Average
Vinyl Chloride	µg/L	--	--	--	3.44E+03
	lbs/day	--	--	--	7.18E+02

1 See Attachment A for definitions of abbreviations and a glossary of common terms used in this Order.

2 Scientific "E" notation is used to express certain values. In scientific "E" notation, the number following the "E" indicates that position of the decimal point in the value. Negative numbers after the "E" indicate that the value is less than 1, and positive numbers after the "E" indicate that the value is greater than 1. In this notation a value of 6.1E-02 represents 6.1×10^{-2} or 0.061, 6.1E+02 represents 6.1×10^{2} or 610, and 6.1E+00 represents 6.1×10^{0} or 6.1.

3 The Discharger may, at their option, apply this performance goal as a total chromium performance goal.

4 If a Discharger can demonstrate to the satisfaction of the San Diego Water Board (subject to USEPA approval) that an analytical method is available to reliably distinguish between strongly and weakly complexed cyanide, effluent limitations for cyanide may be met by (or performance goals may be evaluated with) the combined measurement of free cyanide, simple alkali metals cyanides, and weakly complexed organometallic cyanide complexes. In order for the analytical method to be acceptable, the recovery of free cyanide from metal complexes must be comparable to that achieved by the approved method in 40 CFR part 136, as revised May 14, 1999.

5 The water quality objectives for total chlorine residual applicable to intermittent discharges not exceeding two hours, shall be determined through the use of the following equation:

$\log y = -0.43 (\log x) + 1.8$,

where y =the water quality objective (in µg/l) to apply when chlorine is being discharged;

x =the duration of uninterrupted chlorine discharge in minutes.

Actual effluent limitations for total chlorine, when discharging intermittently, shall then be determined according to Implementation Procedures for Table 1from the Ocean Plan, using a minimum probable initial dilution factor of 94.6 and a flow rate of 25 MGD.

5. Whole Effluent Toxicity (WET)

a. Implementing provisions at section III.C.4.c.(4) of the Ocean Plan state that the Discharger shall conduct chronic toxicity monitoring for ocean waste discharges with minimum initial dilution factors that fall below 100:1. In addition, the RPA for chronic toxicity resulted in Endpoint 1 and the effluent limitation was carried over from Order No. 96-50. Thus monitoring is required to determine compliance with the effluent limitation. Based on methods of the Ocean Plan, a maximum daily effluent limitation of 95.6 TUc is established in the Order and weekly monitoring is carried over from Order No. 96-50.

b. Order No. 96-50 required acute toxicity monitoring in addition to chronic toxicity monitoring. The Ocean Plan does not require acute toxicity monitoring for dischargers with a minimum initial dilution factor less than 100:1.The RPA, however, resulted in Endpoint 1 for acute toxicity and monitoring is required to determine compliance with the effluent limitation. Thus, the effluent limitation and weekly monitoring for acute toxicity from Order No. 96-50 has been carried over to this Order.

D. Final Effluent Limitation Considerations

1. Anti-Backsliding Requirements

Sections 402(o) and 303(d)(4) of the CWA and federal regulations at 40 CFR section 122.44(l) prohibit backsliding in NPDES permits (see section III.C.5 of this Fact Sheet). These anti-backsliding provisions require effluent limitations in a reissued permit to be as stringent as those in the previous permit, with some exceptions where limitations may be relaxed. The effluent limitations in this Order are at least as stringent as the effluent

limitations in the previous Order (Order No. 96-50), with the exception of a) "Maximum at Any Time"(instantaneous maximum) effluent limitations for $CBOD_5$ and TSS and b) other effluent limitations that were not retained for parameters for which there was no RP (Endpoint 2). The removal of these effluent limitations from this Order is consistent with the federal anti-backsliding requirements for the reasons set forth below.

As explained in section IV.B.2 of this Fact Sheet, the instantaneous maximum effluent limitations for $CBOD_5$ and TSS of 45 mg/L and 50 mg\L respectively were not carried over to this Order. These limitations were established by the San Diego Water Board based on best professional judgment (BPJ). Recent attempts to derive instantaneous maximum effluent limitations based on USEPA secondary treatment standards at 40 CFR part 133 using appropriate statistical approaches demonstrated that retaining the previous instantaneous maximum effluent limitations for $CBOD_5$ and TSS in this Order was not supported. This Order does retain average monthly and average weekly effluent limitations (AMEL and AWEL) for $CBOD_5$ and TSS which are based on USEPA secondary treatment standards for POTWs practicing a combination of physical and biological treatment to remove biodegradable organic matter and suspended solids. The AMEL and AWEL for $CBOD_5$ and TSS are expected to ensure the Discharger maintains the same level of treatment required in the previous Order and no degradation of the effluent quality is expected. Anti-backsliding regulations found at 40 CFR 122.44(l) prohibit reissuing or modifying an NPDES permit to include effluent limitations less stringent than in the previous permit, unless one of the exceptions described in 40 CFR 122.44(l) are met. In this instance, the San Diego Water Board has determined that removal of the instantaneous maximum effluent limitations for $CBOD_5$ and TSS effluent limitations is appropriate under the exception described in 40 CFR 122.44(l)(2)(i)(B)(2) because these effluent limitations were based on a technical mistake.

As discussed in section IV.C.3 of this Fact Sheet, effluent limitations from Order No. 96-50 are not retained for parameters for which RPA results indicated Endpoint 2; instead performance goals have been assigned for these parameters. Parameters for which Endpoint 2 was indicated are determined not to have reasonable potential, thus it is inappropriate to establish effluent limitations for these parameters. Effluent limitations have been removed for parameters for which new data is available, and a reasonable potential analysis determined that reasonable potential does not exist, as allowed under 40 CFR section 122(l)(2)(i)(B). Performance goals have been established in their place. The monitoring requirements in Attachment E of this Order are designed to obtain additional information for these parameters to determine if reasonable potential exists for these parameters in future permit renewals and/or updates. The removal of the effluent limitations for parameters where Endpoint 2 is appropriate under the exceptions described in 40 CFR 122.44(I)(2)(i)(A) and (B)(1),.which specify that permits may include a less stringent effluent limitation than the previous permit, if 1) Material and substantial alterations or additions to the permitted facility occurred after permit issuance which justify the application of a less stringent effluent limitation; or 2) Information is available which was not available at the time of permit issuance (other than revised regulations, guidance, or test methods) and which would have justified the application of a less stringent effluent limitation at the time of permit issuance.

Based on all of these considerations, this permit (Order) complies with all applicable federal and State anti-backsliding regulations.

2. Antidegradation Policies

WDRs for the Discharger must conform with antidegradation requirements discussed in section III.C.4 of this Fact Sheet.

As explained in section IV.B.2 of this Fact Sheet, this Order does not retain the instantaneous maximum effluent limitations for $CBOD_5$ and TSS contained in Order No. 96-50. The AMEL and AWEL for $CBOD_5$ and TSS, however, have been retained in this Order. The AMEL and AWEL are expected to ensure the Discharger maintains the same level of treatment and no degradation of the receiving water is expected. Thus, the removal of the instantaneous maximum effluent limitations for $CBOD_5$ and TSS is consistent with State and federal antidegradation policy.

This Order has been modified from Order No. 96-50, to replace WQBELs for some parameters with performance goals based on an RPA. The procedures for conducting the RPA are explained in section IV.C.3 of this Fact Sheet. Performance goals were included in the Order for parameters determined not to have reasonable potential to exceed the water quality objectives, and thus, for which WQBELs were not included. Performance goals will indicate the level of discharge at which possible water quality impacts may be significant. The removal of WQBELs by itself is not expected to cause a change in the physical nature of the effluent discharged and is not expected to impact beneficial uses nor cause a reduction of the water quality of the receiving water. Coupled with the inclusion of performance goals and retention of the monitoring program for parameters without WQBELs, the existing water quality is expected to be maintained. For these reasons, an antidegradation analysis is not required to consider the possible impacts resulting from the removal of WQBELs following an RPA.

This permit complies with the antidegradation provision of 40 CFR section 131.12 and State Water Board Resolution No. 68-16.

3. Stringency of Requirements for Individual Pollutants

This Order contains both technology-based effluent limitations and WQBELs for individual pollutants. The technology-based effluent limitations consist of restrictions on $CBOD_5$, TSS, oil and grease, settleable solids, turbidity, and pH, which are discussed in section IV.B of this Fact Sheet. This Order's technology-based pollutant restrictions implement the minimum, applicable federal technology-based requirements. These limitations are not more stringent than required by the CWA.

WQBELs have been derived to implement water quality objectives that protect beneficial uses. Both the beneficial uses and the water quality objectives have been approved pursuant to federal law and are the applicable federal water quality standards. The procedures for calculating the individual WQBELs are based on the Ocean Plan, which was approved by USEPA on August 19, 2013. All beneficial uses and water quality objectives contained in the Basin Plan were approved under state law and submitted to and approved by USEPA prior to May 30, 2000. Any water quality objectives and beneficial uses submitted to USEPA prior to May 30, 2000, but not approved by USEPA before that date, are nonetheless "applicable water quality standards for purposes of the CWA" pursuant to 40 CFR section 131.21(c)(1). Collectively, this Order's restrictions on individual pollutants are no more stringent than required to implement the requirements of the CWA.

E. Interim Effluent Limitations – Not Applicable

F. Land Discharge Specifications – Not Applicable

G. Recycling Specifications – Not Applicable

V. RATIONALE FOR RECEIVING WATER LIMITATIONS

Receiving water limitations of this Order are derived from the water quality objectives for ocean waters established by the Basin Plan and the Ocean Plan.

Prior to 2009, the San Diego Water Board interpreted the Bacterial Characteristics Water-contact Standards of the Ocean Plan (Receiving Water Limitations section V.A.1) to apply only in the zone bounded by the shoreline and a distance 1,000 feet from the shoreline or the 30-foot depth contour, whichever is further from the shoreline, and within kelp beds. The Ocean Plan provides that these Bacteriological Standards also apply in designated areas outside this zone used for water contact sports, as determined by the Regional Water Boards (i.e., all waters designated with the REC-1 beneficial use). These designated areas must be specifically defined in the Basin Plan. Because the San Diego Water Board has designated the ocean waters with the REC-1 beneficial use in the Basin Plan, the Ocean Plan Bacterial Standards apply throughout State of California territorial marine waters in the San Diego Region, which extend from surface to bottom, out to three nautical miles from the shoreline. This interpretation has been confirmed by the USEPA.

VI. RATIONALE FOR PROVISIONS

A. Standard Provisions

Standard Provisions, which apply to all NPDES permits in accordance with 40 CFR section 122.41, and additional conditions applicable to specified categories of permits in accordance with 40 CFR section 122.42, are provided in Attachment D of this Order.

Sections 122.41(a)(1) and (b) through (n) of 40 CFR establish conditions that apply to all State-issued NPDES permits. These conditions must be incorporated into the permits either expressly or by reference. If incorporated by reference, a specific citation to the regulations must be included in the Order. Section 123.25(a)(12) of 40 CFR allows the state to omit or modify conditions to impose more stringent requirements. In accordance with 40 CFR section 123.25, this Order omits federal conditions that address enforcement authority specified in 40 CFR sections 122.41(j)(5) and (k)(2) because the enforcement authority under the Water Code is more stringent. In lieu of these conditions, this Order incorporates by reference Water Code section 13387(e).

B. Special Provisions

1. Reopener Provisions

This Order may be reopened and modified, revoked and reissued, or terminated in accordance with the provisions of 40 CFR parts 122, 123, 124, and 125. The San Diego Water Board may reopen the permit to modify permit conditions and requirements. Causes for modifications include, but are not limited to, increased/ modified receiving water requirements and participation in the Southern California Coastal Water Research Project (SCCWRP) model monitoring program; the promulgation of new regulations; modification in sludge use or disposal practices; or adoption of new regulations by the State Water Board or the San Diego Water Board, including revisions to the Basin Plan.

2. Special Studies and Additional Monitoring Requirements

a. Spill and Transboundary Wastewater Flow Prevention and Response Plan

i. Discharges of Wastewater and Other Materials

The CWA largely prohibits any discharge of pollutants from point sources to waters of the United States except as authorized under an NPDES permit. In

general, any point source discharge of sewage effluent to waters of the United States must comply with technology-based, secondary treatment standards, at a minimum, and any more stringent requirements necessary to meet applicable water quality standards and other requirements. The unpermitted discharge of wastewater to waters of the United States is illegal under the CWA. Further, the Basin Plan prohibits discharges of waste to land, except as authorized by WDR's or the terms described in Water Code section 13264. The Basin Plan also prohibits the unauthorized discharge of treated or untreated sewage to waters of the State or to a storm water conveyance system. Further, Discharge Prohibition III.A of the Order prohibits the discharge of waste from the Facilities to a location other than Discharge Point No. 001.

Sanitary collection and treatment systems experience periodic failures resulting in discharges that may affect waters of the State and the environment. There are many factors which may affect the likelihood of a spill. To ensure appropriate funding, management, and planning to reduce the likelihood of a spill, and increase the spill preparedness, this Order requires the Discharger to maintain and implement a *Spill and Transboundary Wastewater Flow Prevention and Response Plan* (Prevention/Response Plan).

ii. **Transboundary Flows Containing Wastewater**

IBWC Minute No. 283 states, "[t]he Government of Mexico will assure that there are no discharges of treated or untreated domestic or industrial wastewaters into waters of the Tijuana River that cross the international boundary, and that in the event of a breakdown in collection or other detention facilities designed to prevent such discharges, the Government of Mexico will take special measures to immediately stop such discharges and make repairs. Should Mexico request it through the Commission, the United States Section will attempt to assist with equipment and other resources in the containment of such discharges and temporary repairs under the supervision of the Commission."

The 1944 Water Treaty (*Treaty for the Utilization of Waters of the Colorado and Tijuana Rivers and of the Rio Grande*), states that the government of the U.S. and Mexico shall share the responsibility of border sanitation problems.

This Order requires the Prevention/Response Plan to contain provisions to maximize treatment capacity utilization on both sides of the international border and minimize transboundary wastewater flows to fulfill the agreements contained in the 1944 Water Treaty and IBWC Minute No. 283. These requirements shall serve as an indicator to the San Diego Water Board of the Discharger's ability to adequately coordinate flows between the facilities on both sides of the international border and to better respond to emergencies on either sides of the international border. Emergencies include, but are not limited to, reduction or catastrophic loss of service, which could cause or contribute to a degradation of water quality in the Tijuana River and its tributaries or present an elevated risk to public health and safety in the South Bay region.

iii. **Canyon Collectors**

On July 2, 1990, the United States and Mexican sections of the IBWC signed IBWC Minute No. 283 titled *Conceptual Plan for the International Solution to the Border Sanitation Problem in San Diego, California/Tijuana, Baja California*. IBWC Minute No. 283 states the following: "Should Mexico request [help] through the Commission, the United States Section will attempt to assist with equipment and other resources in the containment of [discharges of treated or untreated domestic or industrial wastewaters into waters of the Tijuana River that cross the international boundary] and temporary repairs under the supervision of the Commission." Mexico has the primary responsibility for preventing the discharge of wastewater to receiving waters in the Tijuana River Valley; but, per IBWC Minute No. 283, the U.S. also has a role assisting with equipment, maintenance, and resources in the containment of wastewater discharges through utilization of the canyon collectors, which collect and divert untreated sewage and other dry weather transboundary flows to the Facility for treatment. These flows have great potential to cause or contribute to degradation of water quality in the receiving water and, therefore, must be contained.

As defined by section 212 of the CWA, a treatment works includes any devices and systems used in the storage, treatment, recycling and reclamation of municipal sewage or industrial wastes of a liquid nature. Treatment works also includes any other method or system for preventing, abating, reducing, storing, treating, separating, or disposing of municipal waste, including storm water runoff, or industrial waste, including waste in combined storm water and sanitary sewer systems. Consistent with this definition, the canyon collectors are considered part of the treatment works of the Facility regulated by this Order.

The CWA largely prohibits any discharge of pollutants from point sources to waters of the United States except as authorized under an NPDES permit. In general, any point source discharge of sewage effluent to waters of the United States must comply with technology-based, secondary treatment standards, at a minimum, and any more stringent requirements necessary to meet applicable water quality standards and other requirements. The unpermitted discharge of wastewater to waters of the United States is unlawful.

The Basin Plan prohibits discharges of waste to land, except as authorized by WDR's or the terms prescribed in Water Code section 13264. The Basin Plan also prohibits the unauthorized discharge of treated or untreated sewage to waters of the State or to a storm water conveyance system.

Discharge Prohibition III.A of the Order prohibits the discharge of waste from the Facilities to a location other than Discharge Point No. 001, unless specifically regulated by this Order or separate WDR's. This prohibition also applies to any dry weather discharge of waste overflowing the canyon collectors.

This Order requires the Prevention/Response Plan to mandate that the Discharger operate and maintain the canyon collectors as part of the treatment works and in a manner consistent with the IBWC Minutes between Mexico and the U.S., to prevent violations of the CWA, Basin Plan, and Prohibition III.A of this Order.

b. **Spill and Transboundary Wastewater Flow Reporting Requirements**

To determine compliance with Discharge Prohibition III.A and provide appropriate notification to the governmental agencies and general public for the protection of public health and the environment, spill and transboundary wastewater flow reporting requirements have been established in section VI.C.2.d of this Order.

c. **Toxicity Reduction Evaluation (TRE)**

Implementing provisions at section III.C.4.c.(4) of the Ocean Plan require chronic toxicity monitoring for ocean waste discharges with minimum initial dilution factors less than 100:1 for the protection of beneficial uses of ocean waters. Based on methods of the Ocean Plan, an acute effluent limitation of 3.2 TUa and a chronic toxicity effluent limitation of 95.6 TUc are established in this Order. The weekly monitoring for acute and chronic toxicity from Order No. 96-50 has been carried over to this Order.

Section III.C.10. of the Ocean Plan requires a Toxicity Reduction Evaluation (TRE) if a discharge consistently exceeds an effluent limitation based on a toxicity objective in Table 1 of the Ocean Plan.

In compliance with the Ocean Plan, this Order requires the Discharger to develop a TRE workplan, submit the TRE workplan within 180 days of the effective date of this Order, and share the TRE workplan with CILA. The workplan must describe steps the Discharger intends to follow if the effluent limitation for acute toxicity (3.2 TUa) is exceeded or if the effluent limitation for chronic toxicity (95.6 TUc) is exceeded.

If the effluent limitation for acute or chronic toxicity is exceeded in any one test, the Discharger must conduct a TRE if the toxicity is exceeded in any of the next six (6) succeeding tests performed at 14-day intervals and notify the San Diego Water Board. The requirement for a minimum of six (6) succeeding tests performed at 14-day intervals is based on the probability of encountering at least one toxicity exceedance assuming a true, but unknown level of occurrence. After the acute or chronic toxicity exceedance, the Discharger must continue to conduct the routine weekly monitoring for both acute and chronic toxicity as required in Attachment E of this Order. The TRE shall be conducted in accordance with the approved TRE workplan and available USEPA guidance documents[2]. The Discharger must also implement a Toxicity Identification Evaluation (TIE), as necessary, based upon the magnitude and persistence of toxicity effluent limitation exceedances. Once the source of toxicity is identified, the Discharger must take all reasonable steps to

[2] See (a) TRE Guidance for Municipal Wastewater Treatment Plants (EPA 833-B-99-002, 1999); (b) Generalized Methodology for Conducting Industrial Toxicity Reduction Evaluations (EPA/600/2-88/070); Toxicity Identification Evaluation, Phase I (EPA/600/6-91/005F); (c) Methods for Aquatic Toxicity Identification Evaluations, Phase II (EPA/600/R-92/080); (d) Methods for Aquatic Toxicity Identification Evaluations, Phase III (EPA/600/R-92/081); and (e) Marine Toxicity Identification Evaluation (TIE): Phase I Guidance Document (EPA/600/R-96-054,1996)

reduce the toxicity to meet the acute and/or chronic toxicity effluent limitation identified in section IV.A of this Order, including working with the Government of Mexico as described further in section VI.C.2.e.

Within 30 days of completion of the TRE, the Discharger must submit the results of the TRE, including a summary of the findings, data generated, a list of corrective actions taken or planned to achieve consistent compliance with all the toxicity limitations of this Order and prevent recurrence of exceedances of those limitations, and a time schedule for implementation of any planned corrective actions. The Discharger must implement any planned corrective actions assigned to the Discharger in the TRE Final Report in accordance with the specified time schedule, unless otherwise directed in writing by the San Diego Water Board. The corrective actions and time schedule must be modified at the direction of the San Diego Water Board.

3. Best Management Practices and Pollution Prevention – Not Applicable

4. Construction, Operation, and Maintenance Specifications – Not Applicable

5. Special Provisions for Municipal Facilities (Wastewater Facilities Only)

a. **Influent Limitations and Pretreatment**

IBWC Minute No. 283 states "[t]he Government of Mexico in accordance with laws in force in that country, in order to assure efficient treatment of Tijuana sewage in the international plant, will require all industries to provide appropriate pretreatment of wastewater that those industries may discharge into the Tijuana sewage collection system which would in turn discharge into the international sewage treatment plant."

Requirement G. 1 of Order No. 96-50 states "[i]n consultation with the Government of Mexico, the discharger shall develop and implement mass emission rate and concentration limitations for the influent to the Facility (influent limitations) for pollutants that may cause or contribute to interference, pass through or other problems described at 40 CFR section 403.5. The influent limits shall prevent violations of the Ocean Plan and this Order."

Requirement G.4 of Order No. 96-50 requires the Discharger to submit a project report to include influent limitations, the basis for the influent limitations, a comparison of the influent limitations with the Facility influent and with any Mexican wastewater quality standards, a sensitivity analysis, and an achievability analysis by June 18, 1997.

On June 4, 1997, the San Diego Water Board received a report titled “Development of Headworks Allocations for the South Bay International Wastewater Treatment Plant - Final Report”. The Final Report identified 16 primary pollutants of concern, including arsenic, beryllium, cadmium, chromium, copper, cyanide, lead, mercury, nickel, silver, zinc, total HCH (Lindane), Aldrin, DDTs, PAHs, and carbon disulfide.

On September 17, 1997, the San Diego Water Board adopted Addendum No. 1 to Order No. 96-50 which established advanced primary treatment influent limitations for 12 of the 16 primary pollutants of concern which were identified in the June 1997 Final Report (including arsenic, beryllium, cadmium, chromium, copper, cyanide,

lead, mercury, nickel, silver, zinc, total HCH (Lindane)). Influent limitations could not be developed for Aldrin, DDTs, PAHs, and carbon disulfide, but these parameters were monitored according to Monitoring and Reporting Program No. 96-50.

Influent limitations are necessary to prevent the introduction of pollutants into the Facility that a) inhibit or disrupt the Facility, its treatment processes or operations, or its sludge processes, use or disposal; b) pass through the Facility in quantities or concentrations that cause or contribute to an exceedance of an applicable water quality standard in the receiving water or otherwise be incompatible with the treatment works; or c) cause other problems as described at 40 CFR section 403.5.

Influent limitations are based on the specific treatment and operational capacity of the Facility and are therefore essential to ensure that all aspects of the treatment works are protected from pass through or interference in accordance with the Clean Water Act and NPDES pretreatment regulations at 40 CFR part 403. Influent limitations impose conditions on the quality of influent discharged into the sewage treatment plant located in the United States. They do not establish water quality or discharge requirements that must be attained in Mexico.

The influent limitations in this Order have been carried over from Order No. 96-50. Section VI.C.5.a.i of this Order requires the Discharger to develop and implement updated influent limitations (also known as Maximum Allowable Headworks Allocations (MAHA) Report) no later than one year after the adoption of this Order, for approval and incorporation into this Order. In consultation with the San Diego Water Board and the government of Mexico, the Discharger must review and update influent limitations, as necessary, to take into account (1) the Facility's recent treatment upgrade from advanced primary treatment capabilities to secondary treatment capabilities; and (2) any changes that may have occurred in the make-up or quantity of industrial users contributing loadings to the Facility via the City of Tijuana's wastewater conveyance system.

USIBWC submitted the MAHA Report on June 18, 2018. Through Amending Order No. R9-2019-0012, the proposed influent limitations in the June 18, 2018 MAHA Report have been approved and incorporated into this Order and supersede the Interim Influent Limitations that were carried over from Order No. 96-50.

This Order contains provisions to address exceedances of influent limitations, including a requirement to formally communicate with Mexico about the quality of the influent to the Facility and any issues regarding the influent quality. These requirements are consistent with and further efforts to attain the goals of IBWC Minute No. 283 to prevent pollutants from entering the Facility that may cause or contribute to interference, pass through or other problems described at 40 CFR section 403.5 and to prevent violations of effluent limitations.

b. **Sludge (Biosolids) Requirements**

The use and disposal of biosolids within the United States is regulated under federal and State laws and regulations, including permitting requirements and technical standards included in 40 CFR part 503. The Discharger is required to comply with the standards and time schedules contained in 40 CFR part 503 for biosolids used or disposed of within the United States.

Title 27, CCR, division 2, subdivision 1, section 20005 establishes approved methods for the disposal of collected screenings, residual sludge, biosolids, and other solids removed from liquid wastes. Requirements to ensure the Discharger disposes of solids in compliance with State and federal regulations have been included in this Order.

In its NPDES application, the Discharger indicates that all biosolids produced at the Facility are trucked to Mexico for disposal. The use and disposal of any biosolids occurring within the United States shall be regulated under this Order.

Monitoring and reporting requirements have been included in this Order in the event of a sludge spill, to ensure proper handling and storage of sludge, and to certify the disposal of the sludge in Mexico.

In the event that the Government of Mexico is unable to truck the processed sludge and solids to Mexico for disposal, this Order requires the Discharger to develop a Sludge and Solids Contingency Plan to temporarily store or dispose of the processed sludge and solids in the United States.

c. **Requirements for Receipt of Anaerobically Digestible Material**

This provision implements an agreement between State Water Board; California Department of Resources Recycling and Recovery; the California Department of Food and Agriculture; and the California Association of Sanitation Agencies regarding the regulation of hauled-in anaerobically digestible material for injection into an anaerobic digester. With the addition of a standard provision in NPDES permits that requires the treatment works to develop and implement standard operating procedures from anaerobically digestible material acceptance and digestion operations, CalRecycle would exempt the operation from regulation under its requirements.

6. Other Special Provisions

7. Compliance Schedules – Not Applicable

VII. RATIONALE FOR MONITORING AND REPORTING REQUIREMENTS

Section 122.48 of 40 CFR requires that all NPDES permits specify requirements for recording and reporting monitoring results. Water Code sections 13267 and 13383 authorize the San Diego Water Board to require technical and monitoring reports. The Monitoring and Reporting Program (MRP), Attachment E, establishes monitoring and reporting requirements that implement federal and state requirements. The following provides the rationale for the monitoring and reporting requirements contained in the MRP for this facility.

A. Core Monitoring Requirements

1. Influent Monitoring Requirements

Influent monitoring is required to determine the compliance with influent limitations, to assist with pretreatment investigations in Mexico, to evaluate compliance with effluent limitations, and to assess the performance of treatment facilities.

The influent monitoring for CBOD5, TSS, volatile suspended solids, and temperature has been increased from weekly to daily to match the effluent monitoring and thus to better evaluate compliance with effluent limitations and assess the performance of the new

treatment facilities. Biochemical oxygen demand (5-day @ 20°C) (BOD5) has been added with a sampling frequency to match the effluent monitoring for the same reason.

The influent monitoring frequency for the other conventional pollutants (total dissolved solids, floating particulates, grease and oil, settleable solids, turbidity, and pH) have been carried over from Order No. 96-50. The influent monitoring frequency for parameters for protection of marine aquatic life has been reduced from weekly to monthly, with the exception of Table B metals and radioactivity. Weekly monitoring for table B metals has been carried over from Order No. 96-50. Radioactivity was already monthly in Order No. 96-50. The influent monitoring frequency for parameters for human health has been reduced from weekly/monthly to quarterly.

The monitoring frequency for the influent set forth in this Order is sufficient to evaluate the highly variable wastewater from Tijuana, Mexico. If, however, any result for this parameter exceeds the applicable interim or final influent limitation specified in this Order, as appropriate, the minimum frequency shall be increased from 1/Week to 5/Week, 1/Month to 1/Week, or 1/Quarter to 1/Month, as appropriate. The increase monitoring along with consultation with Mexico may help determine the cause.

Refer to section III.A of Attachment E of this Order for a summary of influent monitoring requirements.

2. **Effluent Monitoring Requirements**

Effluent monitoring is required to determine compliance with the permit conditions, to identify operational problems, to improve plant performance, and to conduct reasonable potential analyses for subsequent Orders. Effluent monitoring also provides information on wastewater characteristics for use in interpreting water quality and biological data.

Effluent monitoring for soluble BOD has been removed since monitoring of BOD and CBOD5 is sufficient for evaluating the secondary-treated effluent.

The sampling frequencies for the other conventional pollutants (CBOD5, BOD5, volatile suspended solids, total dissolved solids, temperature, floating particulates, total suspended solids, settleable solids, turbidity, and pH) have been carried over from Order No. 96-50, with the exception of grease and oil, which has been reduced from daily to weekly. Weekly sampling frequency for oil and grease is more common for secondary-treated effluent and the oil and grease has not been detected in the effluent from August 2012 to October 2013.

The effluent monitoring frequency for parameters for protection of marine aquatic life has been reduced from weekly to monthly, with the exception Table B metals, radioactivity and total chlorine residual. Monthly monitoring for radioactivity has been carried over from Order No. 96-50. The Facility currently monitors total chlorine residual on a daily basis. Daily monitoring for total chlorine residual has been included in this Order. Weekly monitoring for table B metals has been carried over from Order No. 96-50. Radioactivity was already monthly in Order No. 96-50. The effluent monitoring frequency for parameters for human health has been reduced from weekly/monthly to quarterly.

The Ocean Plan requires discharges greater than 10 MGD to monitor at least semiannually for Table 1 parameters. The monitoring frequency for the effluent set forth in this Order is greater than the Ocean Plan requirement to account for the highly variable wastewater from Tijuana, Mexico, but is reasonable for secondary-treated effluent.

For this Order, as amended by Order No. R9-2017-0024, the Discharger may apply the performance goal for both chromium (VI) and chromium (III) as a total chromium performance goal. The Ocean Plan allows dischargers to meet the objective for chromium (VI) as a total chromium objective (footnote a of Table 1 of the Ocean Plan). Total chromium includes both chromium (VI) and chromium (III) and the Clean Water Act has no analytical method for chromium (III)[3]. Thus, this Order allows the Discharger to also meet the objective for chromium (III) as a total chromium objective. If the Discharger monitors for total chromium to meet the objective for both chromium (VI) and chromium (III), the total chromium data will be used to determine if reasonable potential exists for both chromium (VI) and chromium (III) in future permit reissuances and/or updates.

Refer to section III.B of Attachment E of this Order for a summary of effluent monitoring requirements.

3. **Whole Effluent Toxicity Testing Requirements**

This order contains both acute and chronic toxicity effluent limitation as described in section IV.C.3. Toxicity monitoring has been carried over from Order No. 96-50 to determine compliance with these toxicity effluent limitations.

4. **Land Discharge Monitoring Requirements – Not Applicable**

5. **Recycling Monitoring Requirements – Not Applicable**

B. Receiving Water Monitoring Requirements

The receiving water and sediment monitoring requirements set forth below are designed to measure the effects of the SBOO discharge on the receiving ocean waters. These monitoring requirements will remain in effect on an interim basis, pending development of a new and updated monitoring and assessment programs. The overall receiving water monitoring program is intended to answer the following questions:

(1) Does the receiving water meet water quality standards?

(2) Are the receiving water conditions getting better or worse over time?

(3) What is the relative contribution of the Facility discharge to pollution in the receiving water?

1. Shoreline Water Quality Monitoring Requirements

As ocean surface waves come closer to shore they break, forming the foamy, bubbly surface called surf. The region of breaking waves defines the shoreline.

Monitoring of the shoreline is intended to answer the following questions:

(1) Does the effluent cause or contribute to an exceedance of the water quality standards in the receiving water?

(2) Does the effluent reach water contact zones or commercial shellfish beds?

(3) Are densities of bacteria in water contact areas below levels protective of public health?

Shoreline Station S-1 (located in Mexico near Punta Bandera) was abandoned after August 6, 2002 as a result of legal restrictions that prevented access to this station

[3] In order to obtain a value for chromium (III), two separate methods must be used: one for total chromium determination and one for chromium (VI) determination. The value for chromium (III) is obtained by subtracting the chromium (VI) value from the total chromium value.

beginning in July 2002. Consequently, shoreline Station S-0 was established to replace S-1 as the southernmost shoreline sampling site for SBOO. Sampling began at S-0 on August 13, 2002. This change was documented in the August 2002 monthly self-monitoring report.

Refer to section IV.A of Attachment E of this Order for a summary of shoreline water quality monitoring requirements.

2. Offshore Water Quality Monitoring Requirements

Offshore monitoring extends from south of international border to Point Loma. See Attachment B for a map of the offshore monitoring stations.

Offshore monitoring is necessary to answer the following questions:

(1) Is natural light significantly reduced at any point outside the zone of initial dilution as a result of the discharge?

(2) Does the discharge cause a discoloration of the ocean surface?

(3) Does the discharge of oxygen demanding waste cause the dissolved oxygen concentration to be depressed at any time more than 10 percent from that which occurs naturally?

(4) Does the discharge of waste cause the pH to change at any time more than 0.2 units from that which occurs naturally?

(5) Is the wastewater plume encroaching upon receiving water areas used for swimming, surfing, diving and shellfish harvesting?

(6) What is the fate of the discharge plume?

As commissioned by the USIBWC, staff at the University of California San Diego, Scripps Institution of Oceanography conducted a study to determine the characteristic fates of the wastewater plume from the SBOO. The results of the study were summarized in *the Final Report Coastal Observations Monitoring in South Bay San Diego*, dated February 25, 2009 (Plume Study). Recommendations from the Plume Study have been included in this Order.

Refer to section IV.B of Attachment E of this Order for a summary of off shore water quality monitoring requirements.

3. Benthic Community Protection Monitoring Requirements

Sediments integrate constituents that are discharged to the ocean. Most particles that come from the SBOO discharge, and any associated contaminants, will eventually settle to the seafloor where they are incorporated into the existing sediments. Sediments can accumulate these particles over the years until the point where sediment quality has degraded and beneficial uses are impaired.

The MRP requires periodic assessment of sediment quality to evaluate potential effects of the SBOO discharge and compliance with narrative water quality standards specified in the Ocean Plan. The required assessment consists of the measurement and integration of three lines of evidence: 1) physical and chemical properties of seafloor sediments, 2) seafloor sediment toxicity to assess bioavailability and toxicity of sediment contaminants and 3) ecological status of the biological communities (benthos) that live in or on the seafloor sediments.

The benthic community is strongly affected by sediment composition (e.g., sand, silt, and clay distributions), sediment quality (e.g., chemistry, toxicity), and water quality. Because benthic macroinvertebrates (e.g., infauna) are dependent on their surroundings, they often serve as important biological indicators that reflect the overall conditions of the marine environment.

Sediment and benthic community monitoring are necessary to answer the following question:

(1) Is the dissolved sulfide concentration of waters in sediments significantly increased above that present under natural conditions?

(2) Is the concentration of substances, set forth in Table 1 of the Ocean Plan for protection of marine aquatic life, in marine sediments at levels which would degrade the benthic community?

(1) Is the concentration of organic pollutants in marine sediments at levels that would degrade the benthic community?

(2) Are benthic communities degraded as a result of the discharge?

(3) Is the sediment quality changing over time?

Refer to section IV.C of Attachment E of this Order for a summary of sediment and benthic monitoring requirements.

4. Fish and Invertebrate Monitoring Requirements

Many pollutants discharged into receiving waters have the potential to bioaccumulate and persist in tissue of aquatic organisms, including fish. Chemical pollutants that bioaccumulate tend to magnify in concentration as they pass through the aquatic food chain. Fish monitoring data is required to assess the human health risks for individuals who may consume fish and to assess trends of contaminants levels in the receiving water over time.

Marine aquatic invertebrates are excellent indicators of ecosystem health because they are ubiquitous, abundant, diverse, and typically sedentary. The growth, survival, and reproduction of aquatic invertebrates are all sensitive to declines in environmental health, making analysis of assemblage structure a good ecosystem monitoring tool.

Fish and invertebrate monitoring is necessary to answer the following questions:

(1) Does the concentration of pollutants in fish, shellfish, or other marine organisms used for human consumption bioaccumulate to levels that are harmful to human health?

(2) Does the concentration of pollutants in marine life bioaccumulate to levels that degrade marine communities?

(3) Are the concentrations of pollutants in fish and other marine organisms changing over time?

(4) Is the health of fish changing over time?

(5) Is the population of selected species changing over time?

Refer to section IV.D of Attachment E of this Order for a summary of fish monitoring requirements.

5. Receiving Water Monitoring Reports

In a letter dated November 5, 2015, the City of San Diego requested modifications to the reporting requirements for the receiving water monitoring for the Point Loma Ocean Outfall (PLOO) and SBOO. Order No. R9-2009-0001 for the PLOO discharge from the E.W. Blom Point Loma Wastewater Treatment Plant and Order No. R9-2013-0006 as amended by Order No. R9-2014-0071 for SBOO discharge from the South Bay Water Reclamation Plant[4] required the City of San Diego to submit annual full assessment reports, one annual report for PLOO and one annual report for SBOO. The City of San Diego also prepared a separate annual full assessment report for the Facility discharge to the SBOO as required by Order No. R9-2014-0009 as amended by Order No. R9-2014-0094. The recently adopted new MRP for the PLOO (Order No. R9-2017-0007)[5] authorizes the City of San Diego to replace the above three annual reports with Interim Receiving Water Monitoring Reports (Interim Reports, executive summary) and Biennial Receiving Water Monitoring Reports (Biennial Reports, full assessment) submitted in alternating years. The Interim Reports will cover a single monitoring calendar year (e.g., 2018, 2020), will only cover even numbered years, and shall be submitted every other year. The Biennial Receiving Water Monitoring Reports will provide a more thorough discussion, evaluation (e.g., detailed statistical analyses), and interpretation than the Interim Receiving Water Monitoring Reports; will cover two years of receiving water monitoring (e.g., biennial reports for calendar years 2016-2017, 2018-2019, and 2020-2021), and shall be submitted in the opposite years as the Interim Receiving Water Monitoring Reports. Under this approach, every two years, one integrated Interim Report and one integrated Biennial Report covering the receiving water monitoring requirements for both the SBOO and PLOO may be submitted to comply with NPDES Permit reporting requirements. The Discharger must collaborate with the City of San Diego in the submittal of the Interim Reports and the Biennial Reports required under this Order. The Discharger shall also collaborate with the City of San Diego in providing a Biennial State of the Ocean Report (an oral report) to the San Diego Water Board following each submittal of the Biennial Report. The oral report should focus on the effort completed during the past two years of monitoring, the status of the receiving waters, and plans for future monitoring efforts. If the oral report is not feasible (e.g., board meetings are cancelled or have too many items), a written Biennial State of the Ocean Report may be provided in lieu of an oral report.

Refer to section IV.E of Attachment E of this Order for a summary of fish monitoring requirements.

6. Groundwater – Not Applicable

C. Regional Monitoring Requirements

Regional ocean water monitoring provides information about the sources, fates, and effects of anthropogenic contaminants in the coastal marine environment necessary to make

[4] Order No. R9-2013-0006 as amended by Order Nos. R9-2014-0071 and R9-2017-0023, NPDES Permit No. CA0109045, *Waste* Discharge Requirements for the City of San Diego South Bay Water Reclamation Plant Discharge to the Pacific *Ocean via the South Bay Ocean Outfall,* Monitoring and Reporting Program (Attachment E)

[5] Order No. R9-2017-0007, NPDES Permit No. CA0107409, Waste Discharge Requirements and National Pollutant Discharge Elimination System Permit for the City of San Diego E.W. Blom Point Loma Wastewater Treatment Plant Discharge to the Pacific Ocean Through the Point Loma Ocean Outfall, Monitoring and Reporting Program (Attachment E)

assessments over large areas. The large scale assessments provided by regional monitoring describe and evaluate cumulative effects of all anthropogenic inputs and enable better decision making regarding protection of beneficial uses of ocean waters. Regional monitoring data assists in the interpretation of core monitoring studies by providing a more accurate and complete characterization of reference conditions and natural variability. Regional monitoring also leads to methods standardization and improved quality control through intercalibration exercise. The coalitions implementing regional monitoring enable sharing of technical resources, trained personnel and associated costs. Focusing these resources on regional issues and developing a broader understanding of pollutants effects in ocean waters enables the development of more rapid and effective response strategies. Based on all of these considerations the San Diego Water Board supports regional approaches to monitoring ocean waters.

The Discharger shall, as directed by the San Diego Water Board, participate with other regulated entities, other interested parties, and the San Diego Water Board in development and implementation of new and improved monitoring and assessment programs for ocean waters in the San Diego Region and discharges to those waters. These programs shall be developed and implemented so as to:

(1) Determine the status and trends of conditions in ocean waters in the San Diego Region with regard to beneficial uses, e.g.,

i. Are fish and shellfish safe to eat?

ii. Is water quality safe for swimming?

iii. Are ecosystems healthy?

(2) Identify the primary stressors causing or contributing to conditions of concern;

(3) Identify the major sources of the stressors causing or contributing to conditions of concern; and

(4) Evaluate the effectiveness (i.e., environmental outcomes) of actions taken to address such stressors and sources.

1. Kelp Bed Canopy Monitoring Requirements

Kelp consists of a number of species of brown algae. Along the central and southern California coast, giant kelp (Macrocystis pyrifera) is the largest species colonizing rocky, and in some cases sandy, subtidal habitats. Giant kelp is an important component of coastal and island communities in southern California, providing food and habitat for numerous animals. Monitoring of the kelp beds is necessary to answer the following questions:

(1) What is the maximum areal extent of the coastal kelp bed canopies each year?

(2) What is the variability of the coastal kelp bed canopy over time?

(3) Are coastal kelp beds disappearing? If yes, what are factors that could contribute to the disappearance?

(4) Are new coastal kelp beds forming?

Refer to section V.A of Attachment E of this Order for a summary of kelp bed canopy monitoring requirements.

2. Southern California Bight Monitoring Program Participation Requirements

The Discharger is required to participate in the Southern California Coastal Water Research Project (SCCWRP), Southern California Bight Regional Monitoring Program), or any other coordinator named by the Executive Officer, pursuant to CWC 13267, 13383, and 40 CFR 122.48. The intent of the Southern California Bight Regional Monitoring Program is to maximize the efforts of all monitoring partners using a more cost-effective monitoring design and to best utilize the pooled scientific resources of the Southern California Bight.

During these coordinated sampling efforts, the Discharger's receiving water sampling and analytical effort, as defined in section IV of the MRP, may be reallocated to provide a regional assessment of the impact of the discharge of municipal wastewater to the Southern California Bight. In that event, the receiving water sampling and analytical effort defined in section IV of the MRP will not be required for the duration of the reallocation. Anticipated modifications to the monitoring program will be coordinated so as to provide a more comprehensive picture of the ecological and statistical significance of monitoring results and to determine cumulative impacts of various pollution sources. The level of resources in terms of sampling and analytical effort redirected from the receiving water monitoring program required under section IV the MRP shall equal the level of resources provided to implement the regional monitoring and assessment program, unless the Executive Officer, the Discharger and City of San Diego agree otherwise. The specific scope and duration of the receiving water monitoring program reallocation and redirection shall be determined and set by the Executive Officer in consultation with the Discharger and City of San Diego.

D. Special Studies Requirements

Compliance with Bacteriological Standards

By letter dated January 10, 2013, the City of San Diego provided a tabulation and interpretation of the SBOO receiving water monitoring data for the past 17 years. From 1999 to 2010, the Discharger (USIBWC) discharged advanced primary treated wastewater from the Facility into the Pacific Ocean through the SBOO. During this same time period, sample results at the three offshore receiving water stations closest to the SBOO ranged from 72 to 94 percent in compliance with bacterial water quality objectives and samples at all the offshore receiving water stations for SBOO ranged from 90 to 95 percent in compliance with bacterial water quality objectives. After USIBWC commenced discharging secondary treated effluent from the Facility to meet secondary treatment requirements in January, 2011, sample results at the three offshore stations closest to the SBOO were 99 percent in compliance and sample results at all the offshore stations for SBOO were also 99 percent in compliance.

A new analysis of the receiving water bacterial data is necessary to demonstrate if the SBOO discharge is attaining full compliance with bacteriological receiving water limitations described in section V.A.1 of this Order at all times. The data set used for this analysis must be sufficient to provide statistically defensible conclusions and shall include all receiving water bacterial data collected after July 31, 2012 when the Facility discharge attained substantial compliance with secondary treatment standards through December 31, 2015. Primary questions to be addressed include the following:

(1) Does the Facility effluent cause or contribute to an exceedance of bacteriological receiving water limitations described in section V.A.1 of this Order in ocean waters outside the zone of initial dilution?

(2) What is the extent and magnitude of any identified exceedance of bacteriological receiving water limitations described in section V.A.1 of this Order?

(3) Do any identified exceedances impact any marine water contact recreation zones?

(4) If noncompliance with bacteriological receiving water limitations is identified, and if the noncompliance has not been corrected, what is the anticipated time it is expected to continue; and what are the steps taken or planned to reduce, eliminate, and prevent reoccurrence of the noncompliance?

E. Other Monitoring Requirements

Transboundary Wastewater Flows

Consistent with Water Code sections 13267 and 13383, this Order requires monitoring and reporting to evaluate international border sanitation problems and impacts to the beneficial uses of the Tijuana watershed and the coastal waters where the San Diego Water Board has legal authority to do so. In this Order, the San Diego Water Board has the legal authority to require the Discharger to monitor and assess dry-weather transboundary wastewater flows in Goat Canyon, Smugglers Gulch, Silva Drain, Canyon del Sol, and Stewart's Drain that pass the Discharger's canyon collector systems. The provision of the 1944 Water Treaty, article 3, expresses commitments by the governments of the United States and Mexico to give preferential attention to the solution of all international border sanitation problems. In addition, the 1944 Water Treaty article 2, 3, and 24, give the Discharger the authority to meet this obligation. Pollutant parameters required to be monitored were selected on the basis of their threat to impact REC-1 and other beneficial uses, the 303(d) list for waters in the vicinity of the Tijuana Watershed, and the probability that they may be present in the transboundary flows. This Order also requires the Discharger to provide appropriate notification of transboundary flows to the San Diego Water Board, other local, state, and federal authorities, and the general public for the protection of public health and the environment in the border region.

The term transboundary wastewater flow is used in this Order to refer to a variety of flows containing pollutants from Tijuana, Mexico that have historically flowed into the United States via the north-draining canyons and ravines identified in this Order as Goat Canyon, Smugglers Gulch, Silva Drain, Canyon del Sol, and Stewart's Drain, that empty into the Tijuana River Valley and Estuary. These wastewater flows from Tijuana are attributed to a variety of sources and causes including, but not limited to, treated wastewater effluent discharges, potable water leaks, sewer line leaks and spills, discharges from unsewered areas, and other failures and breakdowns of the wastewater collection infrastructure in Mexico. The transboundary wastewater flows consist of treated and untreated sewage and industrial wastewater, potable water, and other miscellaneous flows depending on the source of the flow. These transboundary wastewater flows have adversely impacted the Tijuana River Valley and Estuary as well as adjacent coastal marine waters and beaches.

Monitoring of dry-weather transboundary wastewater flows that pass any one of the five Discharger's canyon collector systems is necessary to answer the following questions:

(1) What is the frequency and volume of dry weather transboundary wastewater flows?

(2) What are the sources of dry weather transboundary wastewater flows?

(3) What pollutants are present in dry weather transboundary wastewater flows and what is their concentration?

(4) Do pollutants in dry weather transboundary wastewater flows affect beneficial uses of the Tijuana River and Estuary?

(5) What is the mass loading of pollutants on the Tijuana River and Estuary from dry weather transboundary wastewater flows over time?

(6) Are the canyon collector systems being properly operated and maintained to ensure compliance with the conditions of the Order?

VIII. PUBLIC PARTICIPATION

The San Diego Water Board has considered the issuance of WDR's that will serve as an NPDES permit for the South Bay International Wastewater Treatment Plant. As a step in the WDR adoption process, the San Diego Water Board staff developed tentative WDR's and has encouraged public participation in the WDR adoption process and provided an opportunity for public review and comment on the tentative WDRs in accordance with title 40 CFR section 124.10 and Water Code section 13167.5.

A. Notification of Interested Parties

The San Diego Water Board notified the Discharger and interested agencies and persons of its intent to prescribe WDR's for the discharge and provided an opportunity to submit written comments and recommendations. Notification was provided through the San Diego Union Tribune and San Diego Water Board's web site.

The public had access to the agenda and any changes in dates and locations through the San Diego Water Board's web site at:
http://www.waterboards.ca.gov/sandiego/

B. Written Comments

Interested persons were invited to submit written comments concerning tentative WDR's as provided through the notification process. Comments were due either in person or by mail to the Executive Office at the San Diego Water Board at 2375 Northside Drive, Suite 100, San Diego, CA 92108.

To be fully responded to by staff and considered by the San Diego Water Board, the written comments were due at the San Diego Water Board office by 12:00 noon on May 27, 2014.

C. Public Hearing

The San Diego Water Board held a public hearing on the tentative WDR's during its regular Board meeting on the following date and time and at the following location:

Date:	Wednesday, June 26, 2014
Time:	9:00 AM
Location:	Regional Water Quality Control Board Regional Board Meeting Room 2375 Northside Drive, Suite 100 San Diego, CA 92108

Interested persons were invited to attend. At the public hearing, the San Diego Water Board heard testimony, pertinent to the discharge, WDR's, and permit. For accuracy of the record, important testimony was requested in writing.

D. Appeal of Waste Discharge Requirements

Any person aggrieved by this action of the San Diego Water Board may petition the State Water Board to review the action in accordance with CWC section 13320 and California Code of Regulations, title 23, sections 2050. The State Water Board must receive the petition by 5:00 p.m. 30 days after the San Diego Water Board's action at the following address:State Water Resources Control Board
Office of Chief Counsel
P.O. Box 100, 1001 I Street
Sacramento, CA 95812-0100

Copies of the law and regulations applicable to filing petitions may be found on the Internet at: ·

http://www.waterboards.ca.gov/public_notices/petitions/water_quality or will be provided upon request.

E. Information and Copying

The Report of Waste Discharge, other supporting documents, and comments received are on file and may be inspected at the address above at any time between 8:30 a.m. and 4:45 p.m., Monday through Friday. Copying of documents may be arranged through the San Diego Water Board by calling 619-516-1990.

F. Register of Interested Persons

Any person interested in being placed on the mailing list for information regarding the WDR's and NPDES permit should contact the San Diego Water Board, reference this facility, and provide a name, address, and phone number or should sign up for the email subscription list for the "South Bay International Wastewater Treatment Plant – NPDES" at http://www.waterboards.ca.gov/resources/email_subscriptions/reg9_subscribe.shtml.

G. Additional Information

Requests for additional information or questions regarding this order should be directed to Joann Lim at 619-521-3362.

ATTACHMENT G – OCEAN PLAN AND BASIN PLAN PROHIBITIONS

I. Ocean Plan Discharge Prohibitions

1. The Discharge of any radiological chemical, or biological warfare agent or high-level radioactive waste into the ocean is prohibited.

2. Waste shall not be discharged to designated Areas of Special Biological Significance except as provided in chapter III.E of the Ocean Plan.

3. Pipeline discharge of sludge to the ocean is prohibited by federal law; the discharge of municipal and industrial waste sludge directly to the ocean, or into a waste stream that discharges to the ocean, is prohibited. The discharge of sludge digester supernatant directly to the ocean, or to a waste stream that discharges to the ocean without further treatment, is prohibited.

4. The by-passing of untreated wastes containing concentrations of pollutants in excess of those of Table 2 or Table 1 of the Ocean Plan is prohibited.

II. Basin Plan Discharge Prohibitions[1]

1. The discharge of waste to waters of the State in a manner causing, or threatening to cause a condition of pollution, contamination or nuisance as defined in Water Code section 13050, is prohibited.

2. The discharge of waste to land, except as authorized by WDR's or the terms described in Water Code section 13264 is prohibited.

3. The discharge of pollutants or dredged or fill material to waters of the United States except as authorized by an NPDES permit or a dredged or fill material permit (subject to the exemption described in Water Code section 13376) is prohibited.

4. Discharges of recycled water to lakes or reservoirs used for municipal water supply or to inland surface water tributaries thereto are prohibited, unless this San Diego Water Board issues an NPDES permit authorizing such a discharge; the proposed discharge has been approved by the State of California Department of Public Health and the operating agency of the impacted reservoir; and the discharger has an approved fail-safe long-term disposal alternative.

5. The discharge of waste to inland surface waters, except in cases where the quality of the discharge complies with applicable receiving water quality objectives, is prohibited. Allowances for dilution may be made at the discretion of the San Diego Water Board. Consideration would include streamflow data, the degree of treatment provided and safety measures to ensure reliability of facility performance. As an example, discharge of secondary effluent would probably be permitted if streamflow provided 100:1 dilution capability.

6. The discharge of waste in a manner causing flow, ponding, or surfacing on lands not owned or under the control of the discharger is prohibited, unless the discharge is authorized by the San Diego Water Board.

[1] Where the Basin Plan prohibitions refer specifically to discharges to waters of the state, the prohibitions.

7. The dumping, deposition, or discharge of waste directly into waters of the State, or adjacent to such waters in any manner which may permit its being transported into the waters, is prohibited unless authorized by the San Diego Water Board.

8. Any discharge to a storm water conveyance system that is not composed entirely of storm water is prohibited unless authorized by the San Diego Water Board. [The federal regulations, 40 CFR section 122.26(b)(13), define storm water as storm water runoff, snow melt runoff, and surface runoff and drainage. 40 CFR section 122.26(b)(2) defines an illicit discharge as any discharge to a storm water conveyance system that is not composed entirely of storm water except discharges pursuant to an NPDES permit and discharges resulting from firefighting activities.] [section 122.26 amended at 56 FR 56553, November 5, 1991; 57 FR 11412, April 2, 1992].

9. The unauthorized discharge of treated or untreated sewage to waters of the State or to a storm water conveyance system is prohibited.

10. The discharge of industrial wastes to conventional septic tank/ subsurface disposal systems, except as authorized by the terms described in Water Code section 13264, is prohibited.

11. The discharge of radioactive wastes amenable to alternative methods of disposal into the waters of the State is prohibited.

12. The discharge of any radiological, chemical, or biological warfare agent into waters of the State is prohibited.

13. The discharge of waste into a natural or excavated site below historic water levels is prohibited unless the discharge is authorized by the San Diego Water Board.

14. The discharge of sand, silt, clay, or other earthen materials from any activity, including land grading and construction, in quantities which cause deleterious bottom deposits, turbidity or discoloration in waters of the State or which unreasonably affect, or threaten to affect, beneficial uses of such waters is prohibited.

ATTACHMENT H – DILUTION MODEL INFORMATION

The dilution model used to determine the dilution factor of the South Bay Ocean Outfall (SBOO) was the USEPA-approved computer modeling application Visual Plumes (UM3 Model). The USEPA Visual Plumes website is located at <http://www.epa.gov/ceampubl/swater/vplume/index.htm>. The dilution model results are summarized in Table G.1 below.

Table 1: Summary of Visual Plumes dilution model results.

Ambient Profile[1]	Effluent Temperature (°C)	Dilution Factor at last Trap level	Dilution Factor at Surface
January	17.5[2]	159.0	159.0
February	17.5[2]	159.0	159.0
March	17.5[2]	123.2	142.9
April	17.5[2]	108.2	No result
May	17.5[2]	94.6	No result
June	17.5[2]	110.1	No result
July	17.5[2]	109.1	No result
August	17.5[2]	108.0	No result
September	17.5[2]	108.6	No result
October	17.5[2]	114.3	130.9
November	17.5[2]	124.1	142.7
December	17.5[2]	No result	155.4

[1] Ambient profiles developed from receiving water sampling location (I16) with data from June 2002 through December 2004.

[2] 17.5 °C is the most conservative effluent temperature within the effluent profile from June 2002 through December 2004.

Information about the SBOO and the outfall diffuser were obtained from the South Bay Water Reclamation Plant Report of Waste Discharge and correspondence with Facility representatives. The following description of the diffuser configuration was submitted by the Discharger and was used in making assumptions for the input into the model:

There are 82 diffuser riser assemblies (potential of four ports per riser assembly) per leg, and one at the wye structure for a total of 165 riser assemblies. The facility has three potential configurations per diffuser riser assembly: blind flanged with no ports (and no heads); heads (and no blind flanges) with four ports, which are temporarily closed; and heads (no blind flanges) with four open ports.

The naming convention of the assemblies is as follows: the wye is designated "W" and the south and north legs have either a "S" prefix or a "N" prefix, respectively. The numbering starts near the wye structure, with S82 and N82 located near the termini. There are 18 diffuser risers with open ports (72 open ports); they are W, S26, S52, and S68 through S82.

There are three different sizes of ports; with diameters of 2-3/8", 2-1/2", and 2-5/8". The smaller diameter ports are closer to the wye and including the wye. The larger diameter ports are located closer to the termini and the 2-1/2" are in between. There are 53 ports with a diameters of 2-3/8", 52 at 2-1/2", and 60 at 2-5/8".

Port diameter – 2.6 inches - Average diameter of the 72 open ports.

Port elevation – 0.0 meters – Ports are located on the ocean floor.

Vertical angle – 0 degrees.

Horizontal angle – 0 degrees – The diffuser ports alternated facing 0 degrees, 90 degrees, 180 degrees, and 270 degrees. This model does not have input abilities for a diffuser with ports facing various directions. A single direction for all ports was assigned. This will result in a conservative dilution factor.

Number of ports – 72 ports.

Port spacing – 6 feet – The dilution model does not have the ability to input the actual riser/port configuration of the diffuser. The 72 ports were evenly distributed along a length of diffuser representative of the length of diffuser of the south leg in which the majority of the open ports are concentrated (S68 through S82), with additional length included to account for ports located on risers W, S26, and S52.

Acute mix zone – Not relevant, value does not affect dilution factor as defined by the State Water Board.

Chronic mix zone – Not relevant, value does not affect dilution factor as defined by the State Water Board.

Port depth – 94 feet.

Effluent flow – 40 MGD – The total of permitted discharge flows through the SBOO. The actual operating capacity of the outfall is 174 MGD with all ports open.

Effluent salinity – 2.24 mmho/cm – This value was the most conservative salinity value within the effluent profile.

Effluent temp – 17.5 °C – This value was the most conservative temperature value within the effluent profile.

Pollutant concentration – Not relevant, input does not affect dilution factor.

Ambient data – Monthly ambient data for June 2002 through December 2004 obtained from the receiving water monitoring data (sample station I16) made available by SBWRP. Monthly salinity and temperature data taken at offshore monitoring station I16 were averaged at each depth to establish an ambient water profile for each month. The monthly profiles were used in Visual Plumes. For each month and for each Visual Plumes run, initial dilution was interpreted to occur either when the plume first reaches the surface, or at the last trapping level when the plume does not surface. The minimum initial dilution was the lowest dilution factor attained using the May 2004 ambient profile.

Far-field diffusion coefficient – 0.0003 m0.67/s2 - recommended in the Visual Plumes manual as a conservative value.

Special Settings Tab, Farfield Diffusivity Option - 4/3 Power Diffusivity was chosen based on the fact that the discharge is occurring in open water.

Special Settings Tab, Diffuser Port Contraction Coefficient - 0.61 - based on the use of cylindrical ports in the diffuser.

Special Settings Tab, Standard Light Adsorption Coefficient - 0.16 - recommended in the manual as a conservative value.